Benchmark No. 586:
Cut "X" on Northerly Bolt of Existing Ramp 7th-A Pier Foundation
Elevation NAVD 88 = 614.214

Existing Structures:
The existing structures were built in 1973 as F.A.I. Route 74, S.N. 081-0099 (SB I-74) and S.N. 081-0100 (NB I-74). The existing dual structures consist of 6 spans (S.N. 081-0099) and 7 spans (S.N. 081-0100) of reinforced concrete deck on multiple steel plate girders. The total length of existing structures is ±539' and ±573'. The typical deck width is 42'-6" for each structure. Structures to be removed and replaced. A minimum of 2 lanes in each direction shall be maintained during stage construction. No salvage.

EXISTING UTILITY LEGEND

- Underground Sanitary Sewer
- Underground Storm Sewer
- Underground Telephone
- Underground Fiber Optic
- Underground Water

Note: Utilities in conflict are to be relocated or removed by others. (See Utility Plans)

DRAINAGE SCUPPER STATIONS			
S.N. 081-0179 (WB)		S.N. 081-0180 (EB)	
INSIDE	OUTSIDE	INSIDE	OUTSIDE
58+20.00	59+30.00	58+10.00	56+90.00
	59+60.00	58+40.00	

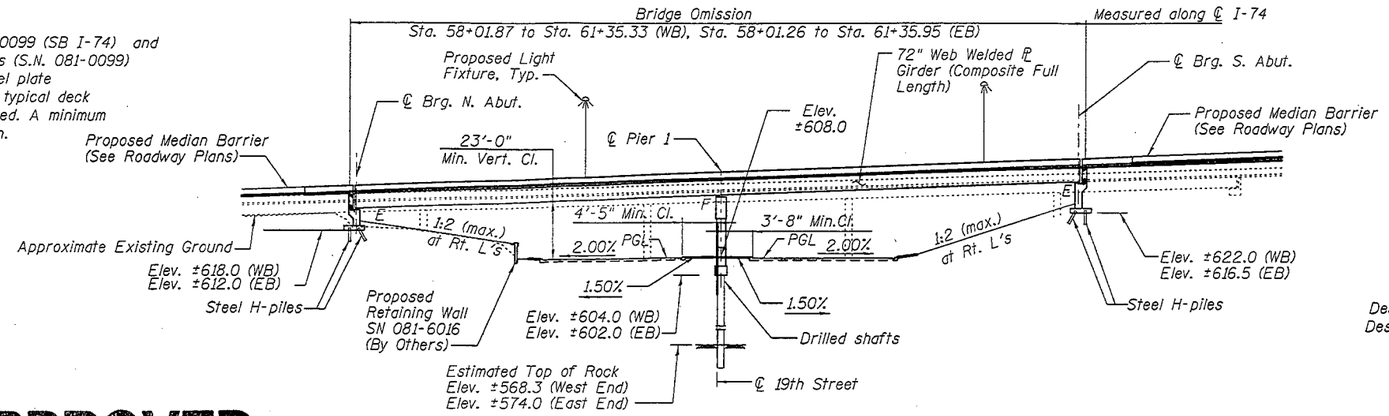

ELEVATION
(Looking East along ℄ I-74)

APPROVED
APR 10 2013
AS A BASIS FOR PREPARATION OF DETAILED PLANS

DESIGN SPECIFICATIONS
2012 AASHTO LRFD Bridge Design Specifications, 6th Edition

DESIGN STRESSES
FIELD UNITS
f'_c = 3,500 psi
f_y = 60,000 psi (Reinforcement)
f_y = 50,000 psi (M270 Grade 50)

LOADING HL-93
Allow 50#/sq. ft. for future wearing surface.

SEISMIC DATA
Seismic Performance Zone (SPZ) = 1
Design Spectral Acceleration at 1.0 sec. (S_{D1}) = 0.061g
Design Spectral Acceleration at 0.2 sec. (S_{DS}) = 0.095g
Soil Site Class = C

HIGHWAY CLASSIFICATION
F.A.I. Route 74
Functional Class: Interstate FAI
ADT: 56,600 (2000): 81,900 (2035)
ADTT: 2830 (2000): 4100 (2035)
DHV: 3150 (2035)
Design Speed: 60 m.p.h.
Posted Speed: 55 m.p.h.
One-Way Traffic Each Structure
Directional Distribution: 1.0 (WB): 1.0 (EB)

19TH Street
Functional Class: Arterial
ADT: 5900 (2000): 6750 (2035)
ADTT: 295 (2000): 340 (2035)
DHV: 620 (2035)
Design Speed: 40 m.p.h.
Posted Speed: 40 m.p.h.
Two-Way Traffic
Directional Distribution: 1.0 (SB): 1.2 (NB)

PR CURVE ML100CL2
PI STA = 51+84.67
Δ = 13° 00' 00" (RT)
D = 1° 54' 35"
R = 3,000.00'
T = 341.81
L = 680.68'
E = 19.41'
e = 4.3%
T.R. (HIGH) = 85' (I)
T.R. (LOW) = 52' (I)
S.E. RUN= 231' (I), 371.11' (O)
PC STA = 48+42.87
PT STA = 55+23.55

PR CURVE ML100CL3
PI STA = 66+05.62
Δ = 20° 30' 00" (LT)
D = 2° 17' 31"
R = 2,500.00'
T = 452.07'
L = 894.48'
E = 40.55'
e = 4.9%
T.R. = N/A
S.E. RUN= 422.89' (I), 410.49' (O)
PC STA = 61+53.55
PT STA = 70+48.03

PR CURVE 19TH_3
PI STA = 1923.30.58
Δ = 12° 08' 13" (LT)
D = 1° 38' 13"
R = 3,500.00'
T = 372.09'
L = 741.40'
E = 19.72'
e = N.C. (2.0%)
T.R. = N/A
S.E. RUN = N/A
PC STA = 1919+58.49
PT STA = 1926+99.89

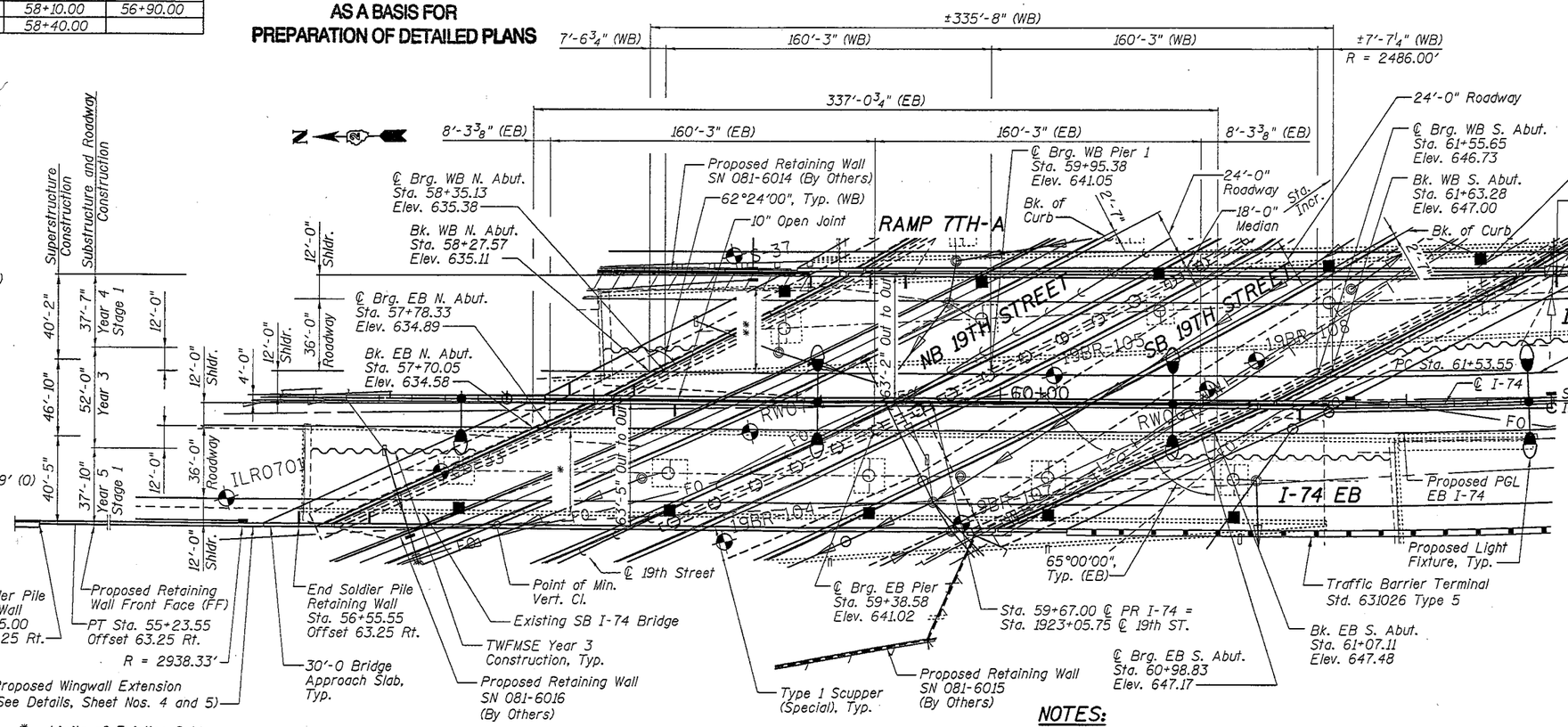

LEGEND
Soil Borings

* Limits of Existing Bridge 081-0099 to be removed.

** Limits of Existing Bridge 081-0100 to be removed.

PLAN

NOTES:
Stations and elevations are given at the Proposed WB and EB PGLs, except as noted.
Wingwall extension stations and offsets are given to the front face (FF) of the wall and are measured from centerline of F.A.I. Route 74.
Temporary Wire Faced MSE Walls (TWFMSE) required for stage construction shall remain in place.

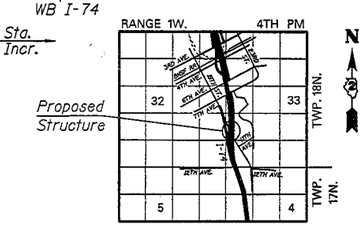

LOCATION SKETCH

GENERAL PLAN
I-74 OVER 19TH STREET
F.A.I. ROUTE 74 SEC. 81-1HB
ROCK ISLAND COUNTY
STA. 59+67.00
STRUCTURE NO. 081-0179 (WB)
STRUCTURE NO. 081-0180 (EB)

MODJESKI and MASTERS — Experience great bridges.

USER NAME =	DESIGNED - MEL	REVISED -	
	CHECKED - JMH	REVISED -	
PLOT SCALE =	DRAWN - AEC	REVISED -	
PLOT DATE = 02/26/2013	CHECKED - JMH	REVISED -	

STATE OF ILLINOIS
DEPARTMENT OF TRANSPORTATION

GENERAL PLAN
I-74 (WB) & (EB) OVER 19TH STREET
SHEET NO. 1 OF 7 SHEETS

F.A.I. RTE.	SECTION	COUNTY	TOTAL SHEETS	SHEET NO.
74	81-1HB	ROCK ISLAND		
		CONTRACT NO. 64C08		
		ILLINOIS FED. AID PROJECT		

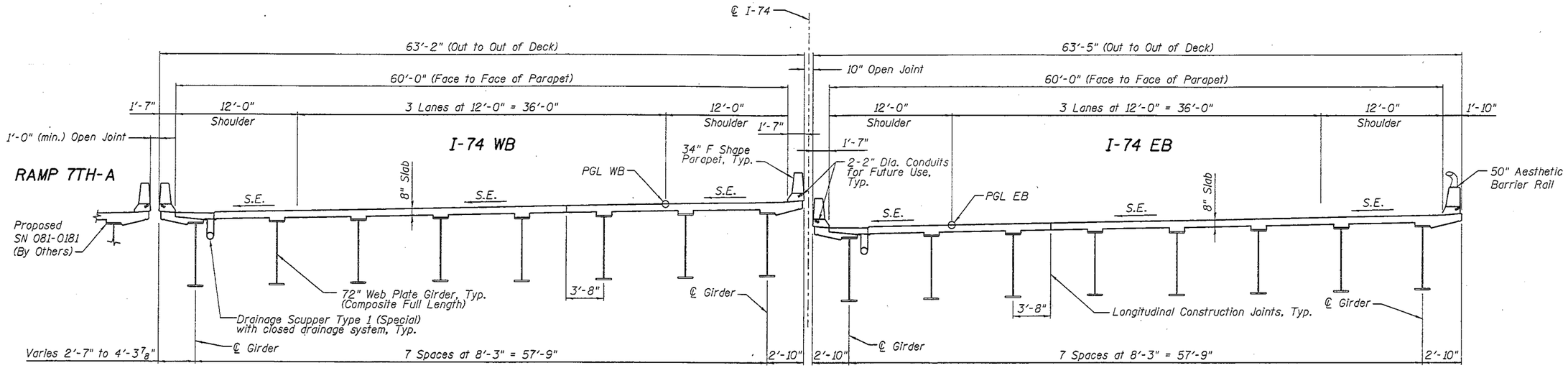

TYPICAL CROSS SECTION

(Looking South)
(Horizontal Dimensions at Rt. L's)

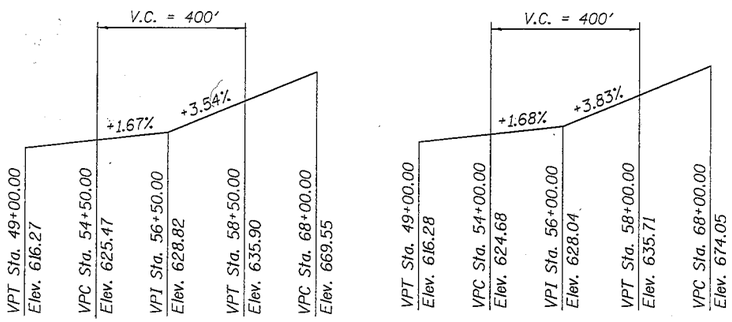

PROFILE GRADE

(Along WB PGL - F.A.I. Route 74)

PROFILE GRADE

(Along EB PGL - F.A.I. Route 74)

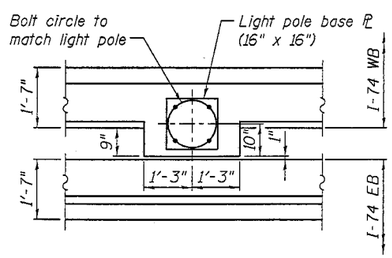

LIGHT POLE BASE DETAIL

APPROVED

APR 10 2013

AS A BASIS FOR PREPARATION OF DETAILED PLANS

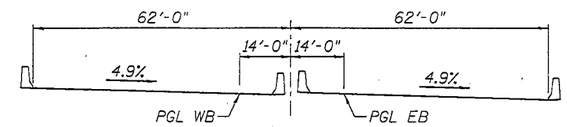

STA. 54+50.00

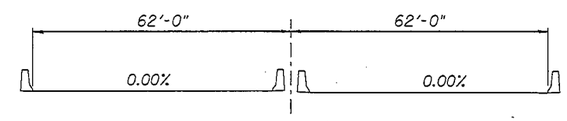

STA. 58+17.66

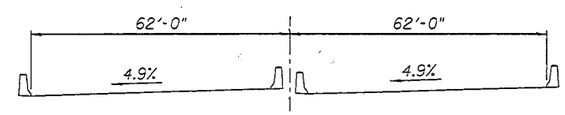

STA. 62+41.00 TO STA. 69+39.64
SUPERELEVATION TRANSITION I-74

(Looking South)

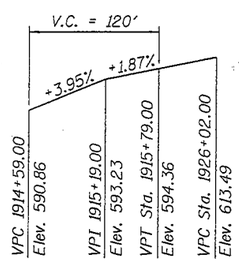

PROFILE GRADE

(Along SB PGL 19th Street)

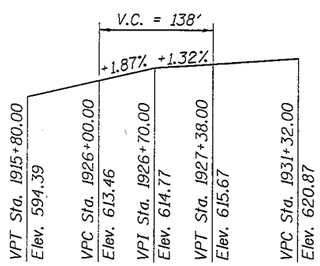

PROFILE GRADE

(Along NB PGL 19th Street)

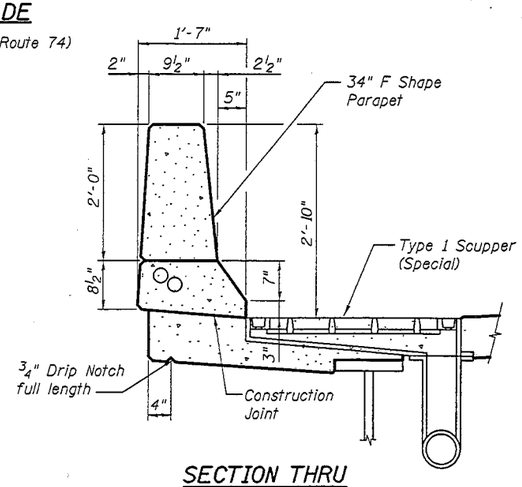

SECTION THRU MEDIAN PARAPET

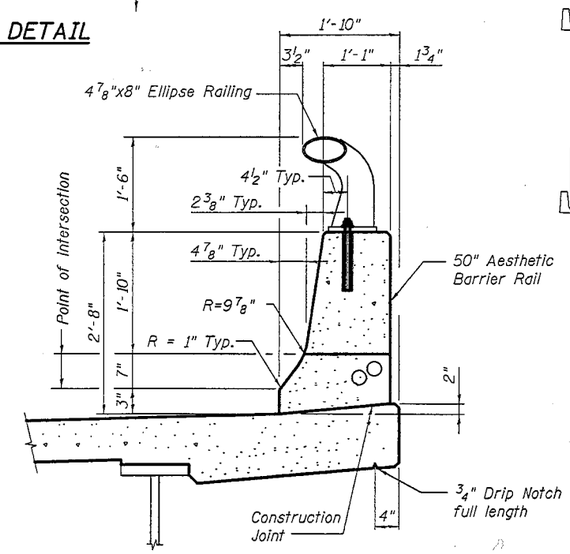

SECTION THRU AESTHETIC BARRIER

DETAILS - 1
I-74 OVER 19TH STREET
F.A.I. ROUTE 74 SEC. 81-1HB
ROCK ISLAND COUNTY
STA. 59+67.00
STRUCTURE NO. 081-0179 (WB)
STRUCTURE NO. 081-0180 (EB)

MODJESKI and MASTERS Experience great bridges.	USER NAME =	DESIGNED - MEL	REVISED -
		CHECKED - JMH	REVISED -
	PLOT SCALE =	DRAWN - AEC	REVISED -
	PLOT DATE = 02/26/2013	CHECKED - JMH	REVISED -

STATE OF ILLINOIS
DEPARTMENT OF TRANSPORTATION

DETAILS – 1
I–74 (WB) & (EB) OVER 19TH STREET
SHEET NO. 2 OF 7 SHEETS

F.A.I. RTE.	SECTION	COUNTY	TOTAL SHEETS	SHEET NO.
74	81-1HB	ROCK ISLAND		
		CONTRACT NO. 64C08		
		ILLINOIS FED. AID PROJECT		

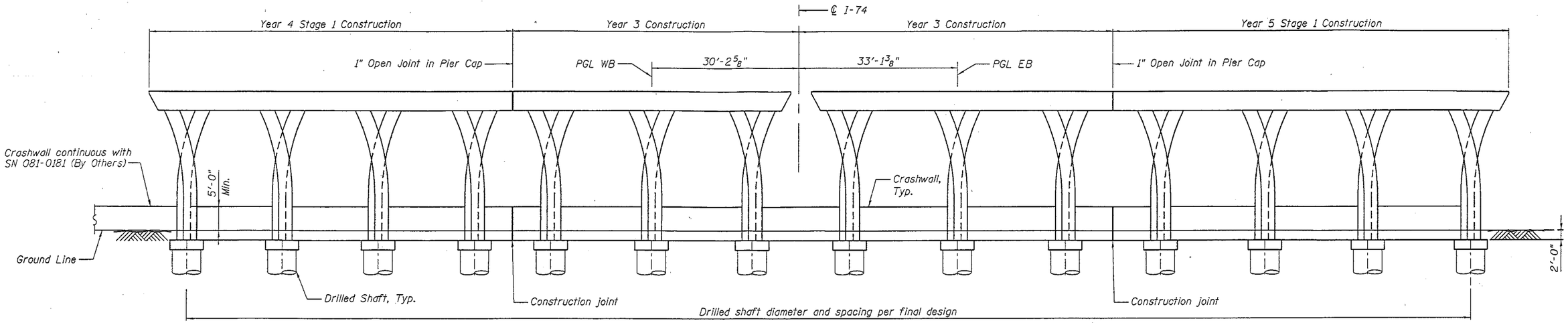

PIER SKETCH

(Looking South Along F.A.I. Route I-74)
(Horizontal dimensions measured along the skew.)

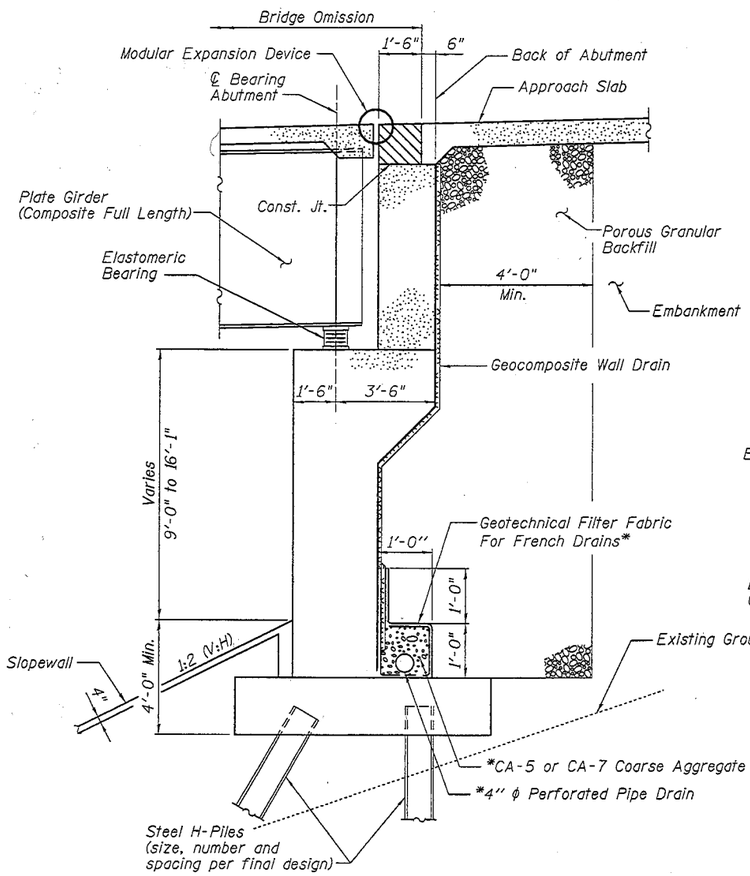

SECTION THRU SOUTH ABUTMENT

(Horizontal Dimensions at Rt. L's)

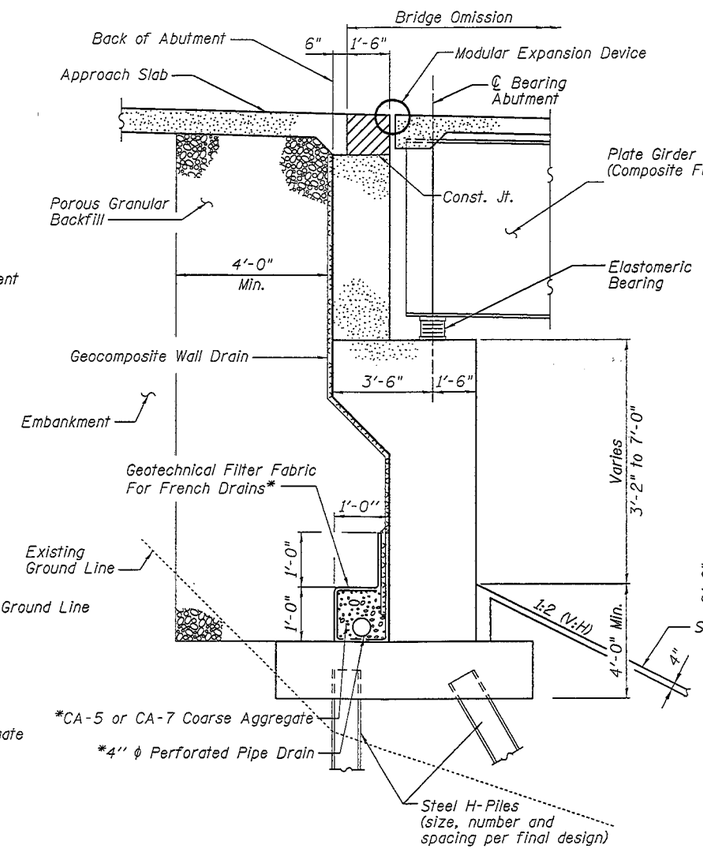

SECTION THRU NORTH ABUTMENT

(Horizontal Dimensions at Rt. L's)

* Included in the cost of "Pipe Underdrains for Structures".

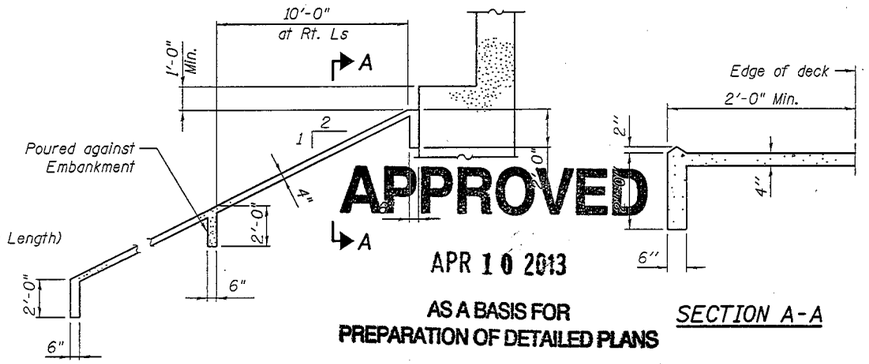

APPROVED
APR 10 2013
AS A BASIS FOR PREPARATION OF DETAILED PLANS

SECTION A-A

SECTION THRU SLOPEWALL AT SOUTH ABUTMENT

(Horizontal Dimensions at Rt. L's)

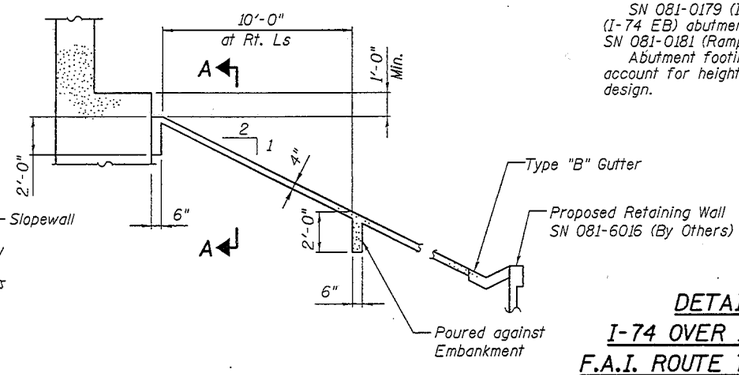

SECTION THRU SLOPEWALL AT NORTH ABUTMENT

(Horizontal Dimensions at Rt. L's)

NOTES:

SN 081-0179 (I-74 WB) and SN 081-0180 (I-74 EB) abutments are continuous with SN 081-0181 (Ramp 7th-A) abutments.

Abutment footings will be stepped to account for height variations in final design.

DETAILS - 2
I-74 OVER 19TH STREET
F.A.I. ROUTE 74 SEC. 81-1HB
ROCK ISLAND COUNTY
STA. 59+67.00
STRUCTURE NO. 081-0179 (WB)
STRUCTURE NO. 081-0180 (EB)

MODJESKI and MASTERS Experience great bridges.	USER NAME =	DESIGNED - MEL	REVISED -
		CHECKED - JMH	REVISED -
	PLOT SCALE =	DRAWN - AEC	REVISED -
	PLOT DATE = 02/26/2013	CHECKED - JMH	REVISED -

STATE OF ILLINOIS
DEPARTMENT OF TRANSPORTATION

DETAILS - 2
I-74 (WB) & (EB) OVER 19TH STREET
SHEET NO. 3 OF 7 SHEETS

F.A.I. RTE.	SECTION	COUNTY	TOTAL SHEETS	SHEET NO.
74	81-1HB	ROCK ISLAND		
		CONTRACT NO. 64C08		
		ILLINOIS FED. AID PROJECT		

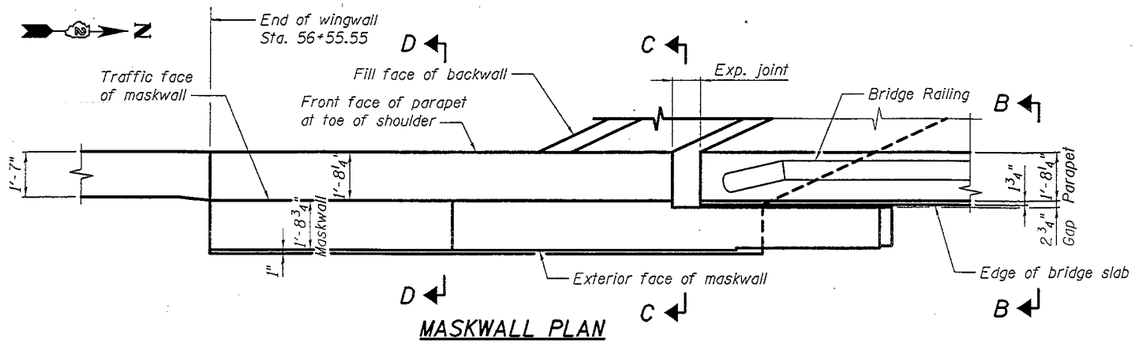

MASKWALL PLAN
Northwest Quadrant

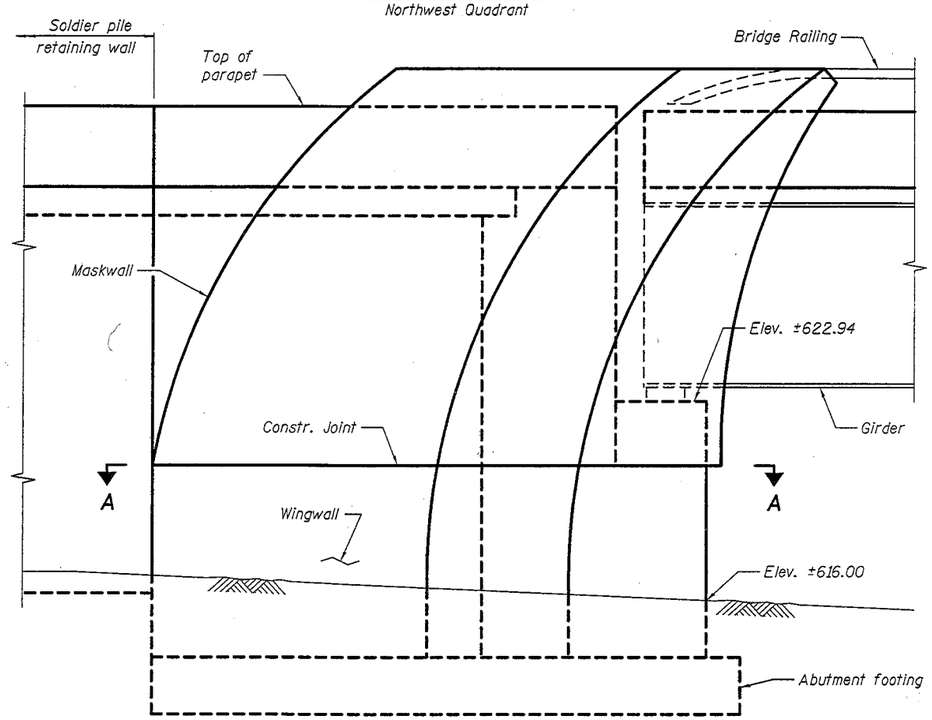

ELEVATION
Northwest Quadrant

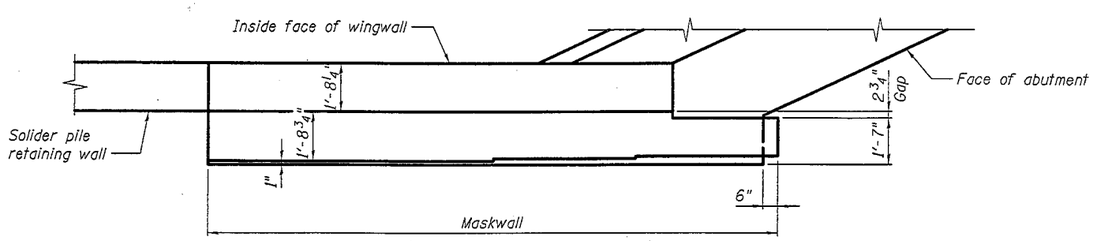

SECTION A-A

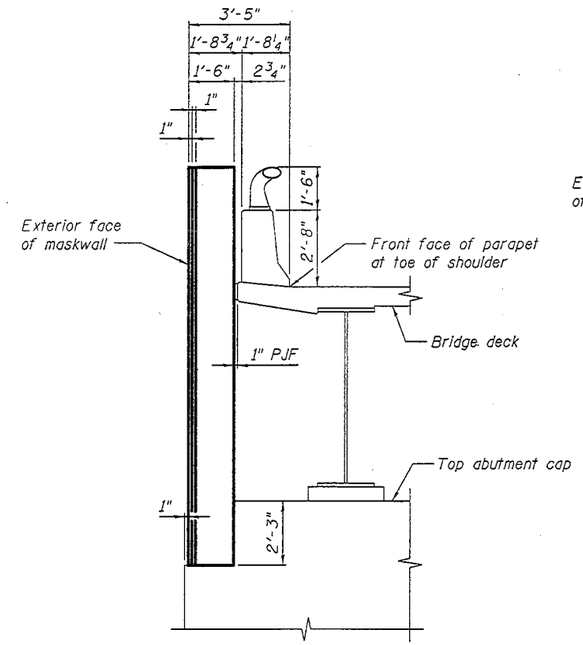

SECTION B-B

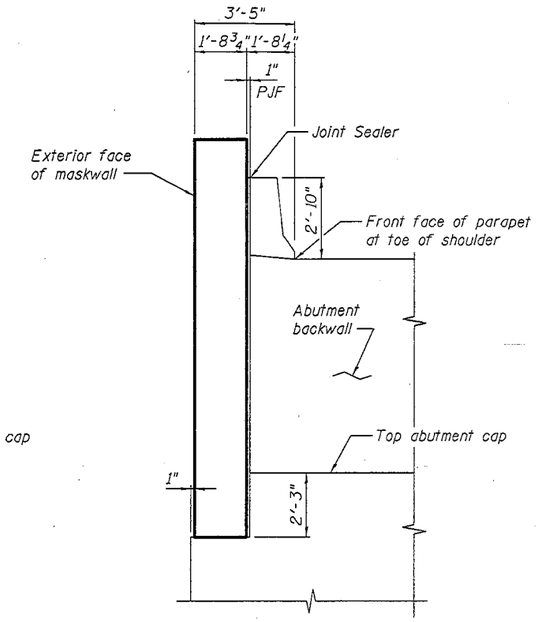

SECTION C-C

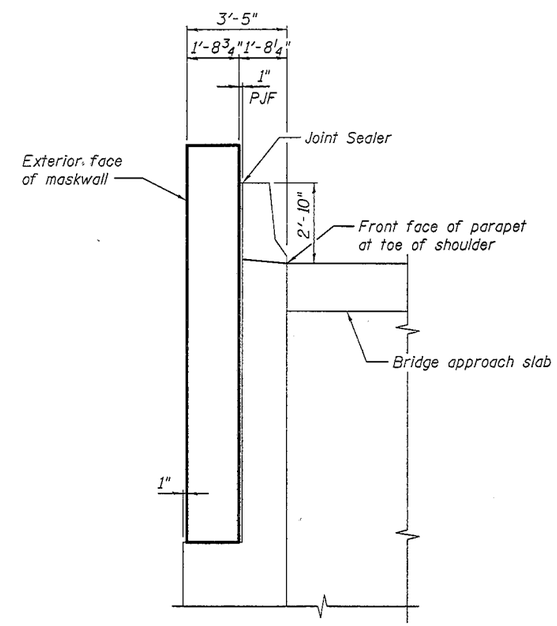

SECTION D-D

APPROVED

APR 10 2013

AS A BASIS FOR PREPARATION OF DETAILED PLANS

DETAILS - 3
I-74 OVER 19TH STREET
F.A.I. ROUTE 74 SEC. 81-1HB
ROCK ISLAND COUNTY
STA. 59+67.00
STRUCTURE NO. 081-0179 (WB)
STRUCTURE NO. 081-0180 (EB)

MODJESKI and MASTERS Experience great bridges.	USER NAME =	DESIGNED - PRC	REVISED -
		CHECKED - JMH	REVISED -
	PLOT SCALE =	DRAWN - PRC	REVISED -
	PLOT DATE = 02/26/2013	CHECKED - JMH	REVISED -

STATE OF ILLINOIS
DEPARTMENT OF TRANSPORTATION

DETAILS - 3
I-74 (WB) & (EB) OVER 19TH STREET
SHEET NO. 4 OF 7 SHEETS

F.A.I. RTE.	SECTION	COUNTY	TOTAL SHEETS	SHEET NO.
74	81-1HB	ROCK ISLAND		
		CONTRACT NO. 64C08		
		ILLINOIS FED. AID PROJECT		

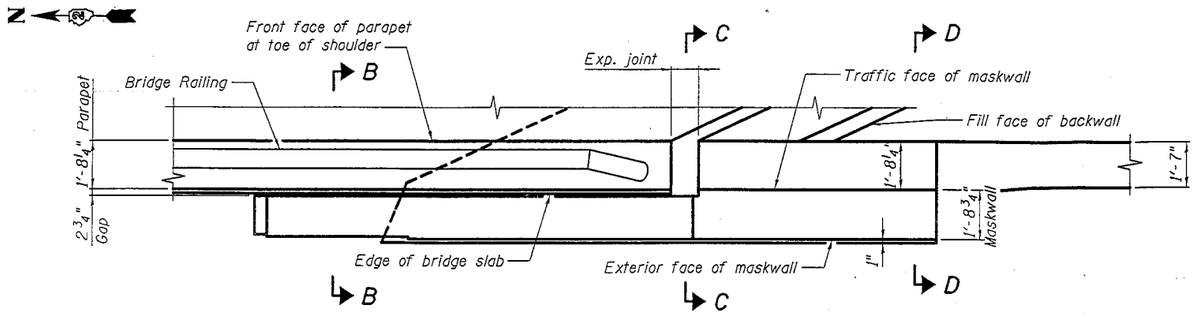

MASKWALL PLAN
Southwest Quadrant

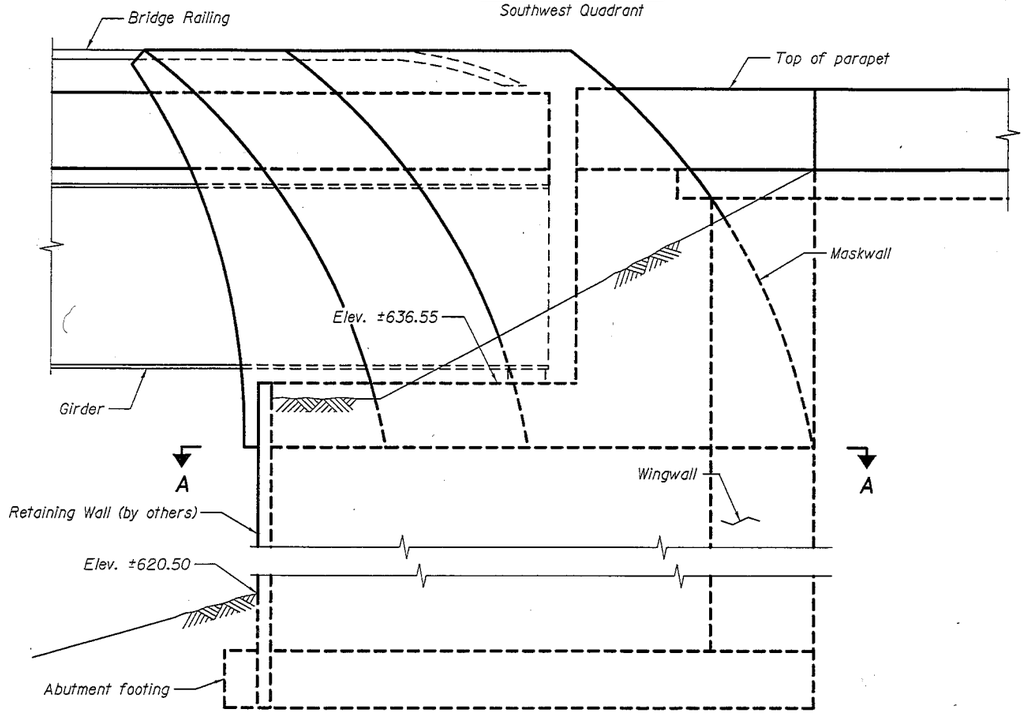

ELEVATION
Southwest Quadrant

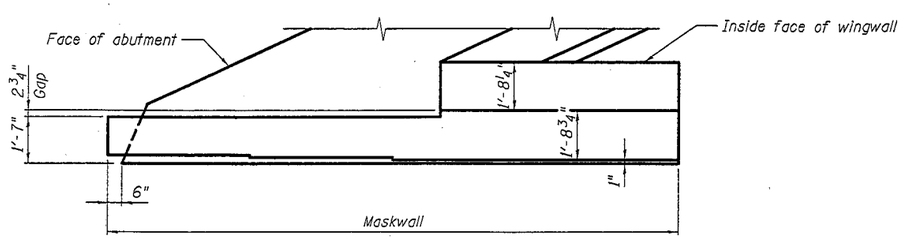

SECTION A-A

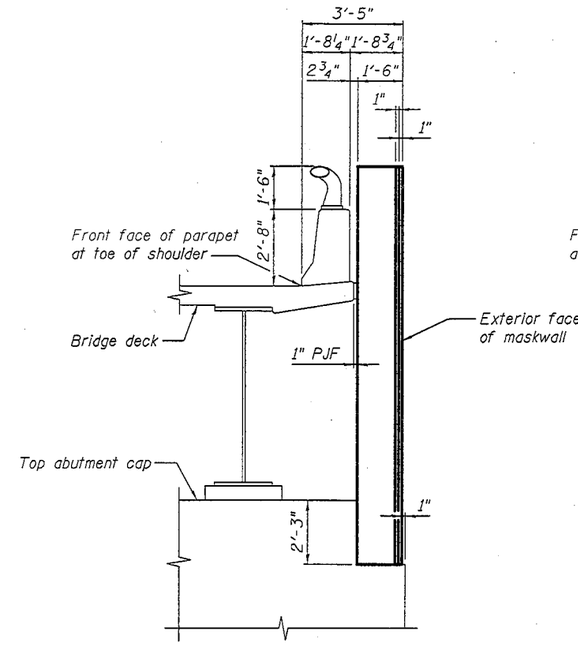

SECTION B-B

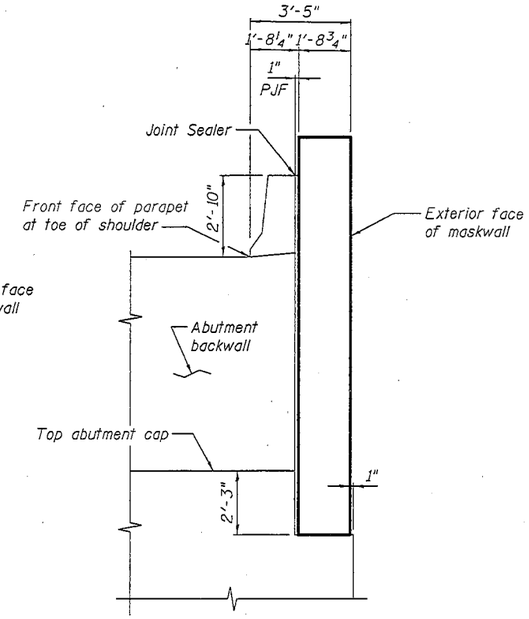

SECTION C-C

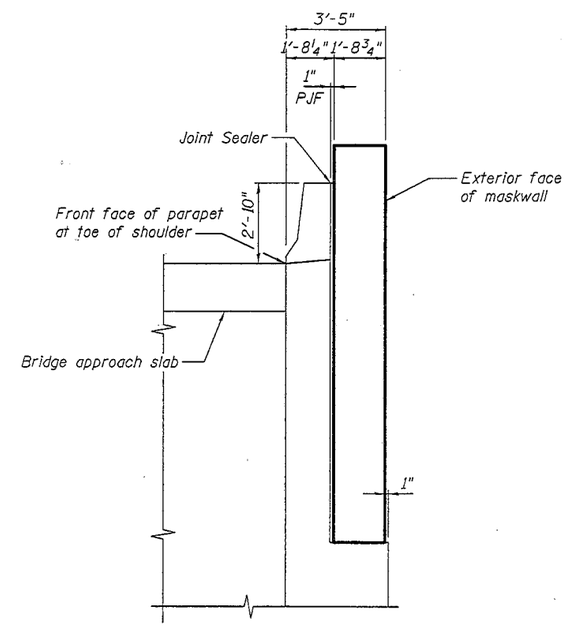

SECTION D-D

APPROVED

APR 10 2013

AS A BASIS FOR PREPARATION OF DETAILED PLANS

DETAILS - 4
I-74 OVER 19TH STREET
F.A.I. ROUTE 74 SEC. 81-1HB
ROCK ISLAND COUNTY
STA. 59+67.00
STRUCTURE NO. 081-0179 (WB)
STRUCTURE NO. 081-0180 (EB)

MODJESKI and MASTERS — Experience great bridges.	USER NAME =	DESIGNED - PRC	REVISED -
		CHECKED - JMH	REVISED -
	PLOT SCALE =	DRAWN - PRC	REVISED -
	PLOT DATE = 02/26/2013	CHECKED - JMH	REVISED -

STATE OF ILLINOIS
DEPARTMENT OF TRANSPORTATION

DETAILS – 4
I-74 (WB) & (EB) OVER 19TH STREET
SHEET NO. 5 OF 7 SHEETS

F.A.I. RTE.	SECTION	COUNTY	TOTAL SHEETS	SHEET NO.
74	81-1HB	ROCK ISLAND		
		CONTRACT NO. 64C08		
		ILLINOIS FED. AID PROJECT		

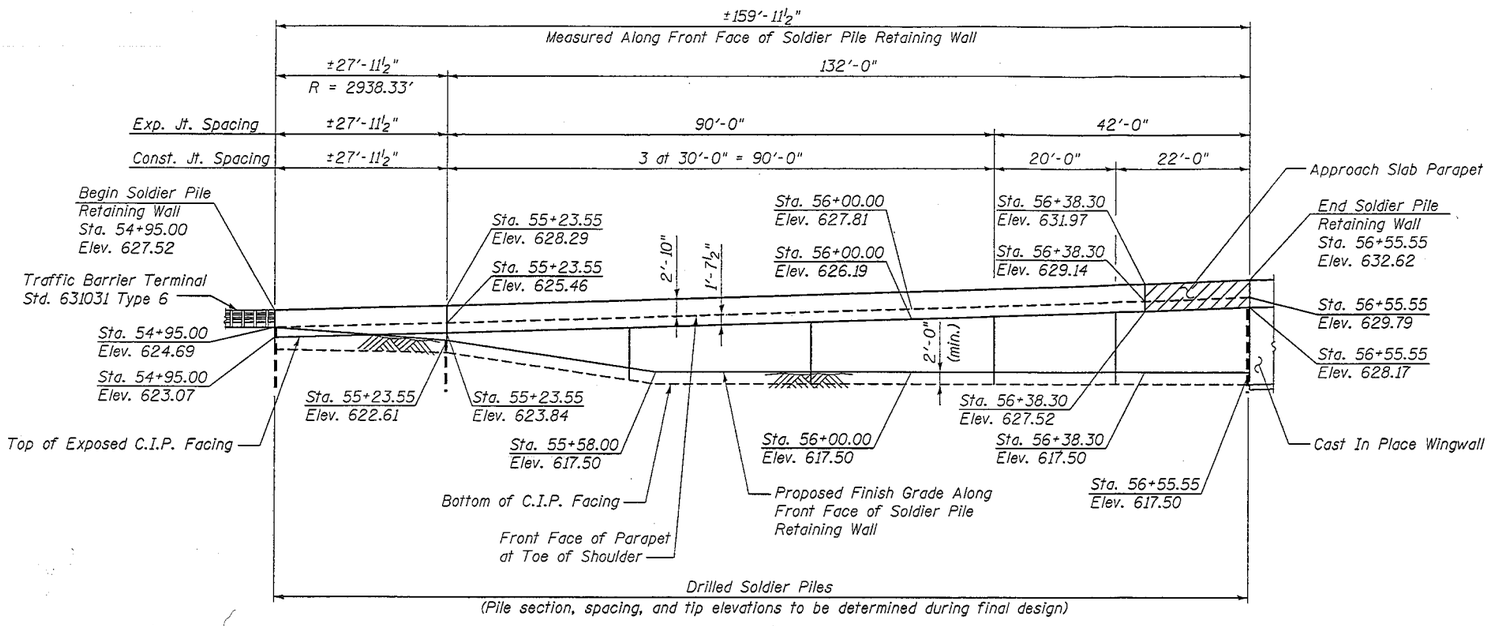

WINGWALL EXTENSION
(Looking East)

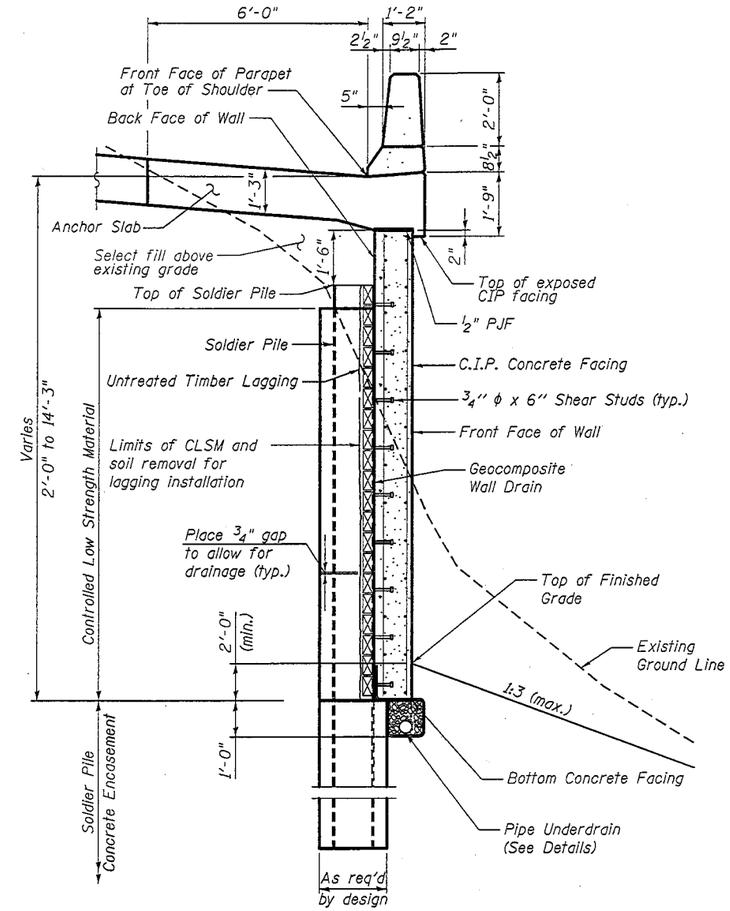

TYPICAL WALL SECTION

APPROVED

APR 10 2013

AS A BASIS FOR PREPARATION OF DETAILED PLANS

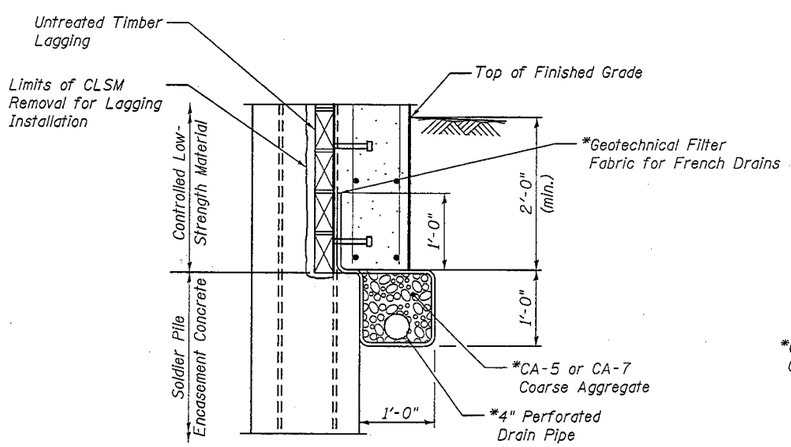

PIPE UNDERDRAIN DETAIL AT SOLDIER PILES

*Included in the cost of Pipe Underdrains for Structures

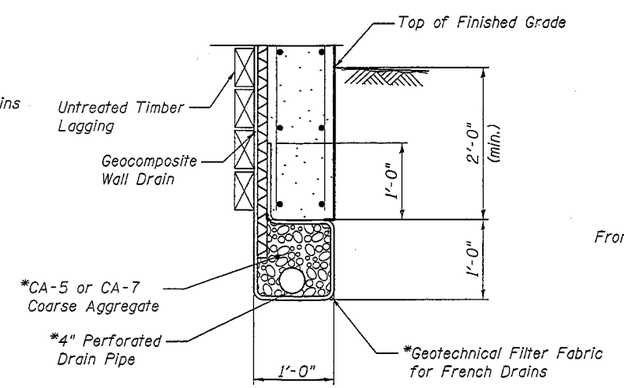

PIPE UNDERDRAIN DETAIL BETWEEN SOLDIER PILES

*Included in the cost of Pipe Underdrains for Structures

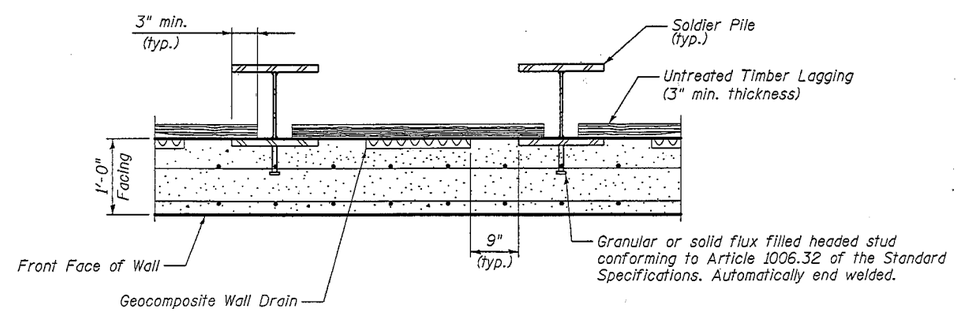

TYPICAL SECTION THRU WALL

Note: CLSM not shown for clarity.

DETAILS - 5
I-74 OVER 19TH STREET
F.A.I. ROUTE 74 SEC. 81-1HB
ROCK ISLAND COUNTY
STA. 59+67.00
STRUCTURE NO. 081-0179 (WB)
STRUCTURE NO. 081-0180 (EB)

MODJESKI and MASTERS — Experience great bridges.	USER NAME =	DESIGNED - PRC	REVISED -
		CHECKED - JMH	REVISED -
	PLOT SCALE =	DRAWN - AEC	REVISED -
	PLOT DATE = 02/26/2013	CHECKED - JMH	REVISED -

STATE OF ILLINOIS
DEPARTMENT OF TRANSPORTATION

DETAILS – 5
I-74 (WB) & (EB) OVER 19TH STREET
SHEET NO. 6 OF 7 SHEETS

F.A.I. RTE.	SECTION	COUNTY	TOTAL SHEETS	SHEET NO.
74	81-1HB	ROCK ISLAND		
		CONTRACT NO. 64C08		
	ILLINOIS FED. AID PROJECT			

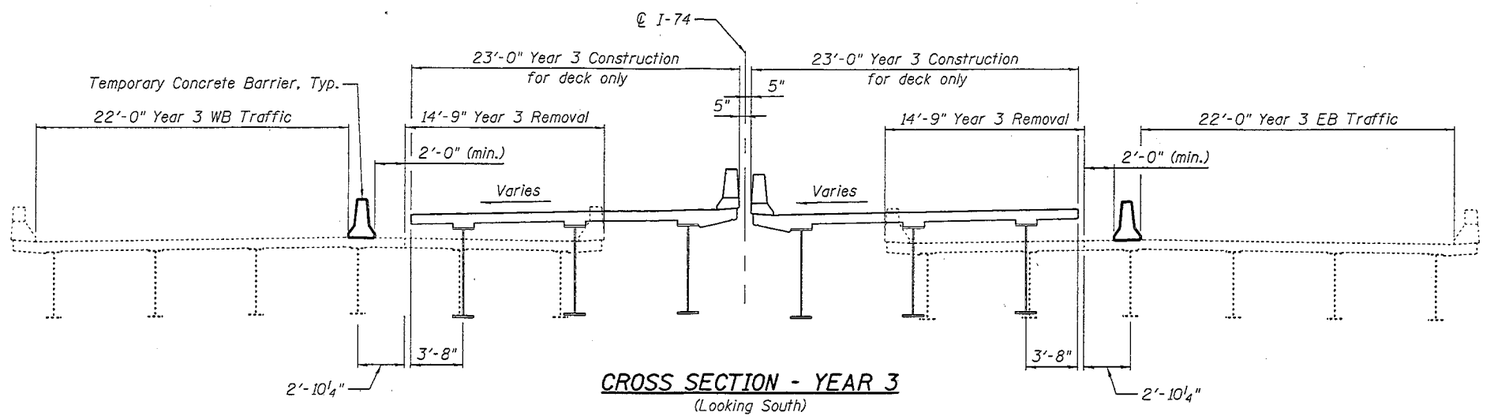

CROSS SECTION - YEAR 3
(Looking South)

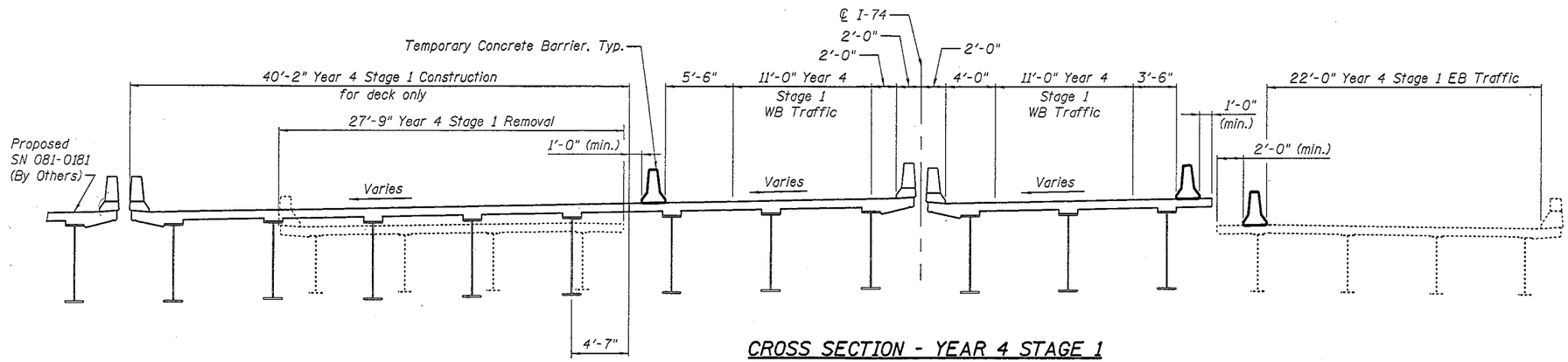

CROSS SECTION - YEAR 4 STAGE 1
(Looking South)

APPROVED

APR 10 2013

AS A BASIS FOR
PREPARATION OF DETAILED PLANS

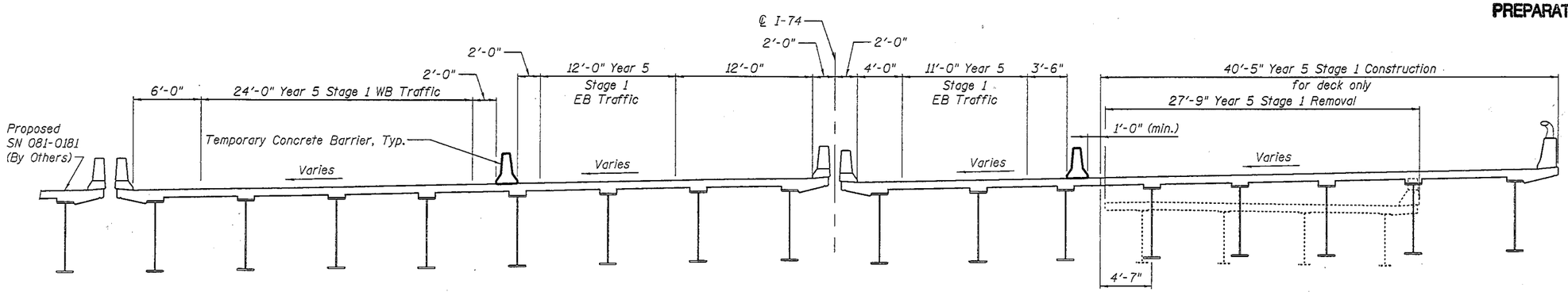

CROSS SECTION - YEAR 5 STAGE 1
(Looking South)

STAGING DETAILS
I-74 OVER 19TH STREET
F.A.I. ROUTE 74 SEC. 81-1HB
ROCK ISLAND COUNTY
STA. 59+67.00
STRUCTURE NO. 081-0179 (WB)
STRUCTURE NO. 081-0180 (EB)

MODJESKI and MASTERS Experience great bridges.	USER NAME =	DESIGNED - MEL	REVISED -	STATE OF ILLINOIS DEPARTMENT OF TRANSPORTATION	STAGING DETAILS I-74 (WB) & (EB) OVER 19TH STREET	F.A.I. RTE.	SECTION	COUNTY	TOTAL SHEETS	SHEET NO.
		CHECKED - JMH	REVISED -			74	81-1HB	ROCK ISLAND		
	PLOT SCALE =	DRAWN - AEC	REVISED -					CONTRACT NO. 64C08		
	PLOT DATE = 02/26/2013	CHECKED - JMH	REVISED -		SHEET NO. 7 OF 7 SHEETS		ILLINOIS	FED. AID PROJECT		