B.M.:
Chiseled "□" NE Corner Bottom Step Wingwall NB Structure, Sta. 276+00, 64' Lt. Elev. 605.94

EXISTING STRUCTURE:

SN 081-0014 & SN 081-0015 originally built as FAI Route 80, Section 81-1VB at Sta. 277+11.45 in 1965. Both structures were rehabilitated in 1990 including deck scarification, deck overlay, bearing replacement, traffic barrier improvement and expansion joint replacement as Section (81-1VB)M The existing structures consist of 3-span continuous steel W-Beams with non-composite concrete deck, supported on concrete pile bent, spill through abutments and hammerhead type piers. The structures are 180'-11" back to back abutments and 36'-0" out to out of deck, and 0 degree skew. Existing structures are to be removed and replaced. Traffic will be maintained using crossovers.

Note: Existing Sta. 277+11.45 = Proposed Sta. 277+04.01.

No Salvage

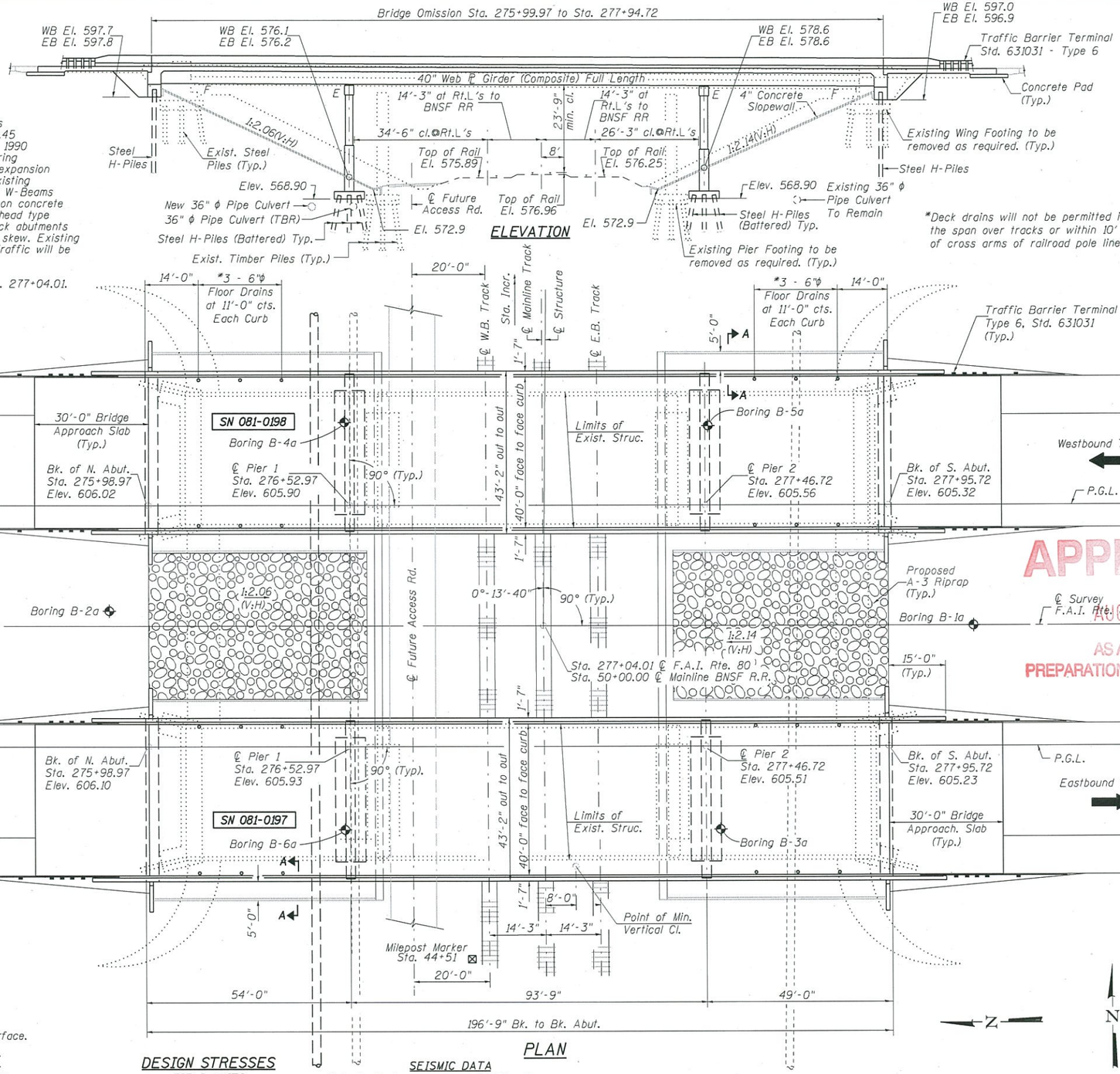

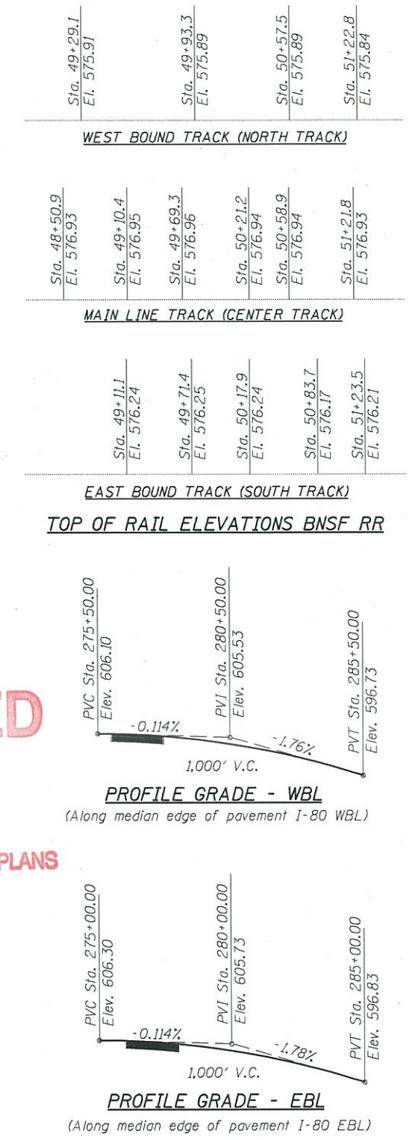

APPROVED
AUG 13 2014
AS A BASIS FOR PREPARATION OF DETAILED PLANS

HIGHWAY CLASSIFICATION

FAI 80 - I-80
Functional Class: Principal Arterial
ADT: 11,880 (2013) (one way)
16,488 (2033) (one way)
DHV: 1,649 (2033) (one way)
ADTT: 42.1%
Design Speed: 70 mph
Posted Speed: 65 mph

LOADING HL-93

Allow 50#/sq. ft. future wearing surface.

DESIGN SPECIFICATIONS

2012 AASHTO LRFD Bridge Design Specifications 6th Edition

DESIGN STRESSES

FIELD UNITS

f'c = 3,500 p.s.i.
fy = 60,000 p.s.i. (Reinforcement)
fy = 50,000 p.s.i. (M270 Grade 50)

SEISMIC DATA

Seismic Performance Zone (SPZ) = 1
Design Spectral Acceleration at 1.0 sec. (S_{D1}) = 0.062g
Design Spectral Acceleration at 0.2 sec. (S_{DS}) = 0.098g
Soil Site Class = C

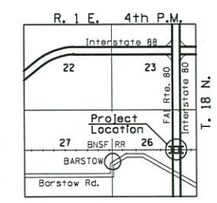

LOCATION SKETCH

GENERAL PLAN
I-80 OVER BNSF RAILROAD
F.A.I. 80 SECTION (81-1VB)BR
ROCK ISLAND COUNTY
STATION 277+04.01
STR. NO. 081-0197 (EB)
STR. NO. 081-0198 (WB)

Hutchison Engineering, Inc.
Jacksonville, Peoria & Shorewood, Illinois

USER NAME = tcody	DESIGNED - JOH	REVISED -	
PLOT SCALE = NONE	CHECKED - BAN	REVISED -	
PLOT DATE =	DRAWN - TAC	REVISED -	
	CHECKED - BAN	REVISED -	

STATE OF ILLINOIS
DEPARTMENT OF TRANSPORTATION

GENERAL PLAN
S.N 081-0197(EB) & S.N. 081-0198(WB)
SHEET NO. 1 OF 2 SHEETS

F.A.I. RTE.	SECTION	COUNTY	TOTAL SHEETS	SHEET NO.
80	(81-1VB)BR	Rock Island	-	-
		CONTRACT NO. 64B78		
		ILLINOIS FED. AID PROJECT		

2845RRtsi01

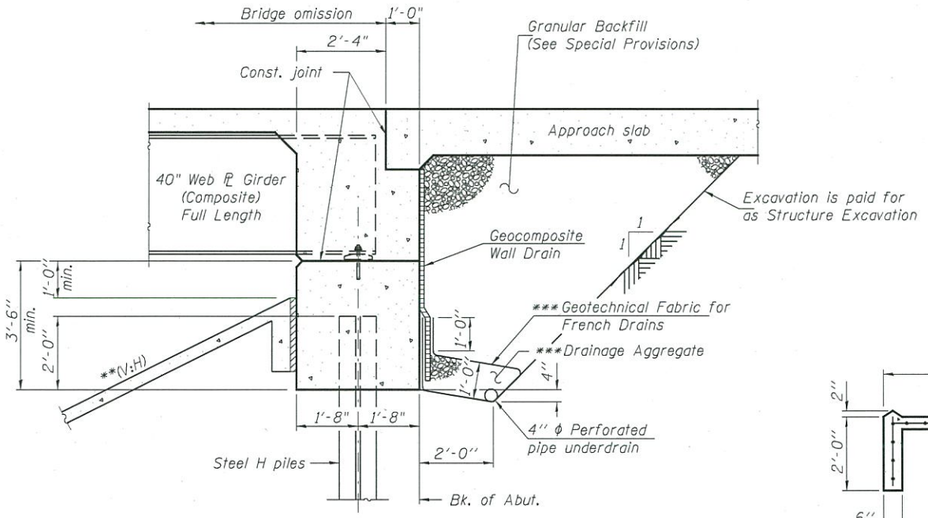

SECTION THRU INTEGRAL ABUTMENT

*** Included in the cost of Pipe
Underdrains for Structures
(See Special Provisions)

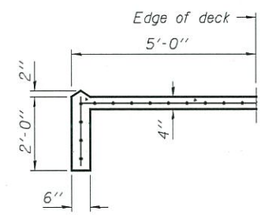

SECTION A-A

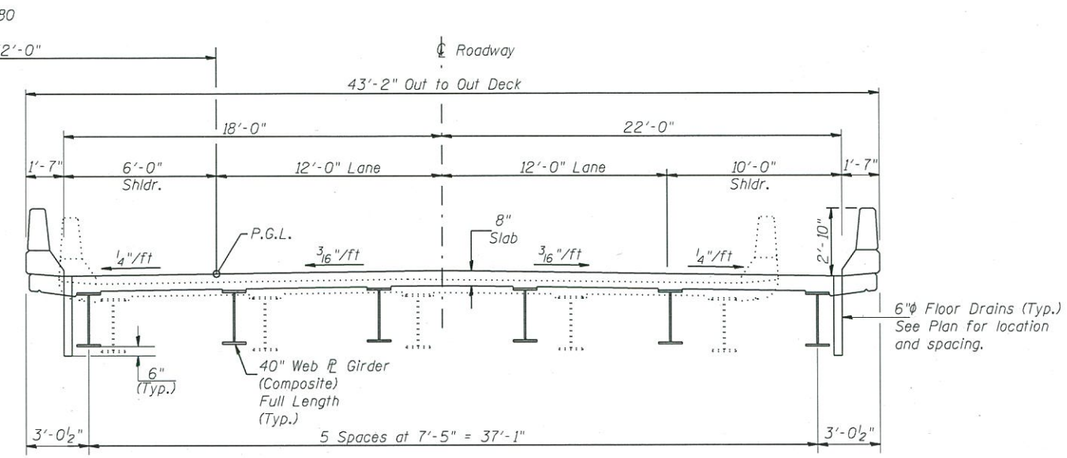

PROPOSED CROSS SECTION

Eastbound Lanes Looking South
Westbound Lanes Looking North

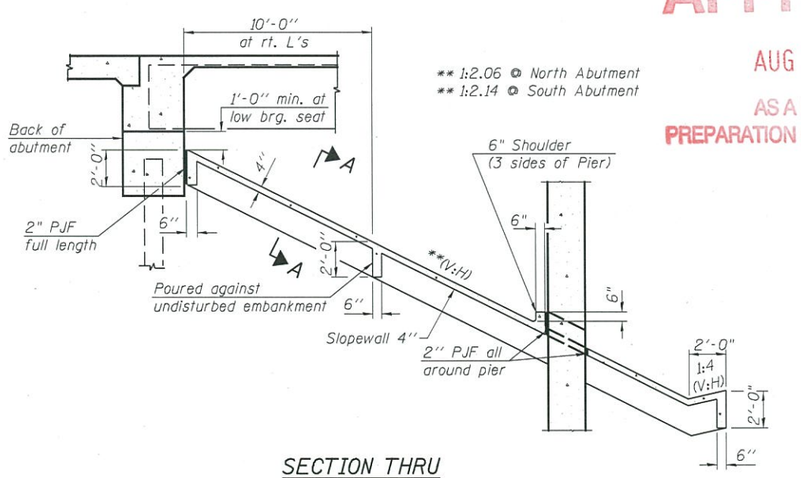

SECTION THRU CONCRETE SLOPEWALL

APPROVED
AUG 13 2014
AS A BASIS FOR
PREPARATION OF DETAILED PLANS

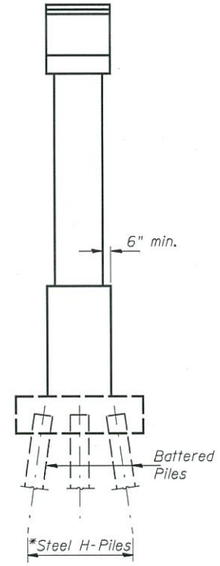

END VIEW

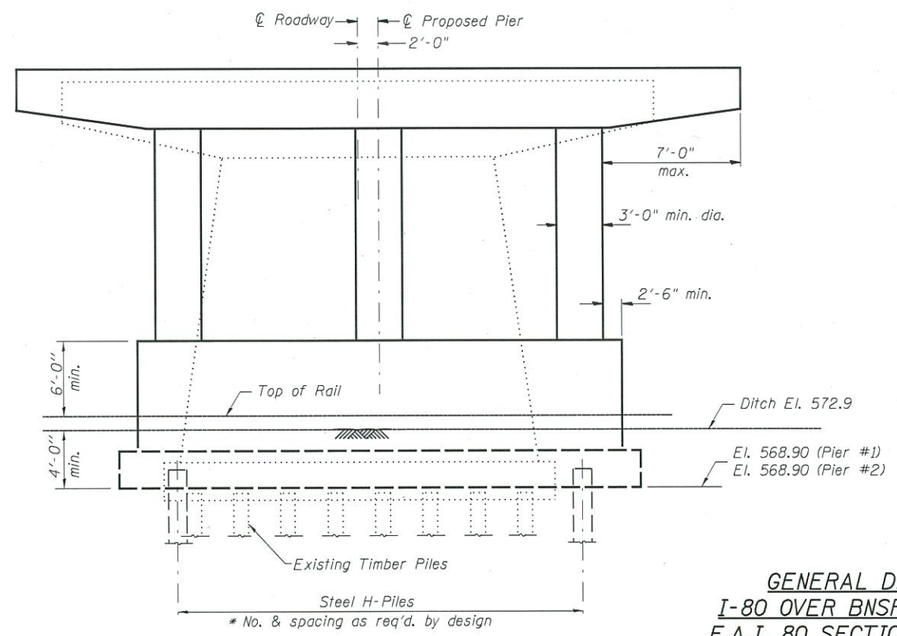

ELEVATION

Eastbound Lanes Looking South
Westbound Lanes Looking North

PIER SKETCH

*Space piling to miss existing timber piles.

GENERAL DETAILS
I-80 OVER BNSF RAILROAD
F.A.I. 80 SECTION (81-1VB)BR
ROCK ISLAND COUNTY
STATION 277+04.01
STR. NO. 081-0917 (EB)
STR. NO. 081-0918 (WB)

Hutchison Engineering, Inc. Jacksonville, Peoria & Shorewood, Illinois	USER NAME = tcody	DESIGNED - JOH	REVISED -	STATE OF ILLINOIS DEPARTMENT OF TRANSPORTATION	GENERAL DETAILS S.N 081-0197(EB) & S.N. 081-0198(WB)	F.A.I. RTE.	SECTION	COUNTY	TOTAL SHEETS	SHEET NO.
	PLOT SCALE = NONE	CHECKED - BAN	REVISED -			80	(81-1VB)BR	Rock Island	-	-
	PLOT DATE =	DRAWN - TAC	REVISED -					CONTRACT NO. 64B78		
		CHECKED - BAN	REVISED -		SHEET NO. 2 OF 2 SHEETS		ILLINOIS	FED. AID PROJECT		

2845RRtsi02