Benchmark: Iron Pin. Sta. 313+85.66. 5.73' Rt. Elev. 582.94

Existing Structure: S.N. 081-1018 built as a 10'x4' reinforced Box Culvert with a 131'-10" out to out length. Existing structure to be removed and replaced. Traffic to be maintained utilizing stage construction. Temporary pavement and a temporary culvert extension will be constructed to accommodate Stage I Traffic.

Salvage: No Salvage.

Note: Precast alternate not allowed.

APPROVED

APR 22 2013

AS A BASIS FOR PREPARATION OF DETAILED PLANS

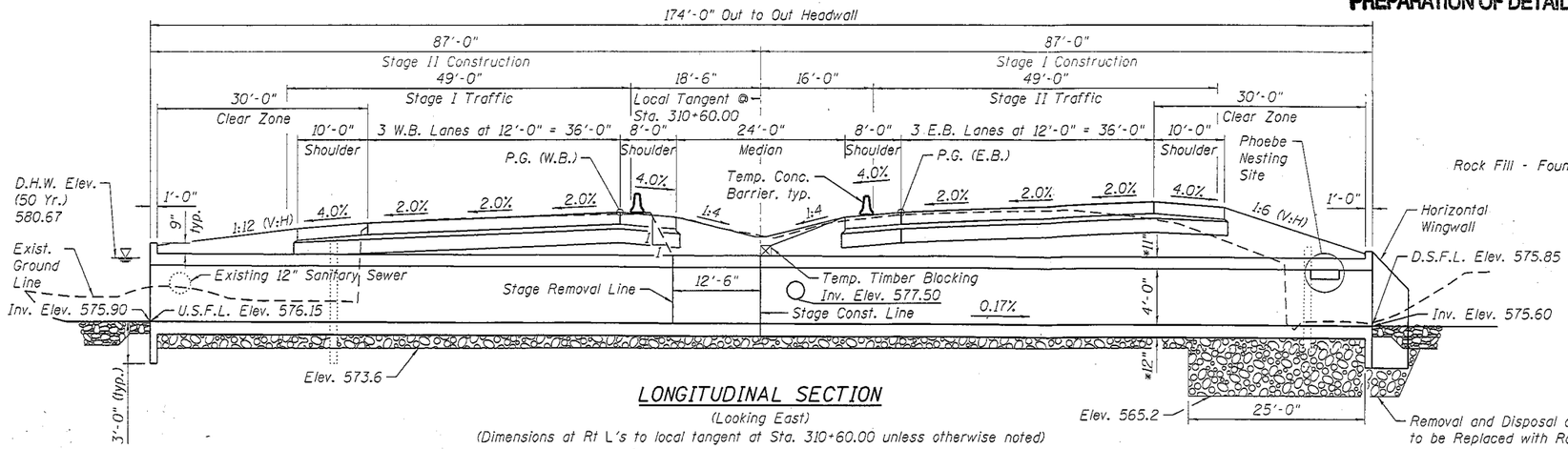

LONGITUDINAL SECTION

(Looking East)

(Dimensions at Rt L's to local tangent at Sta. 310+60.00 unless otherwise noted)

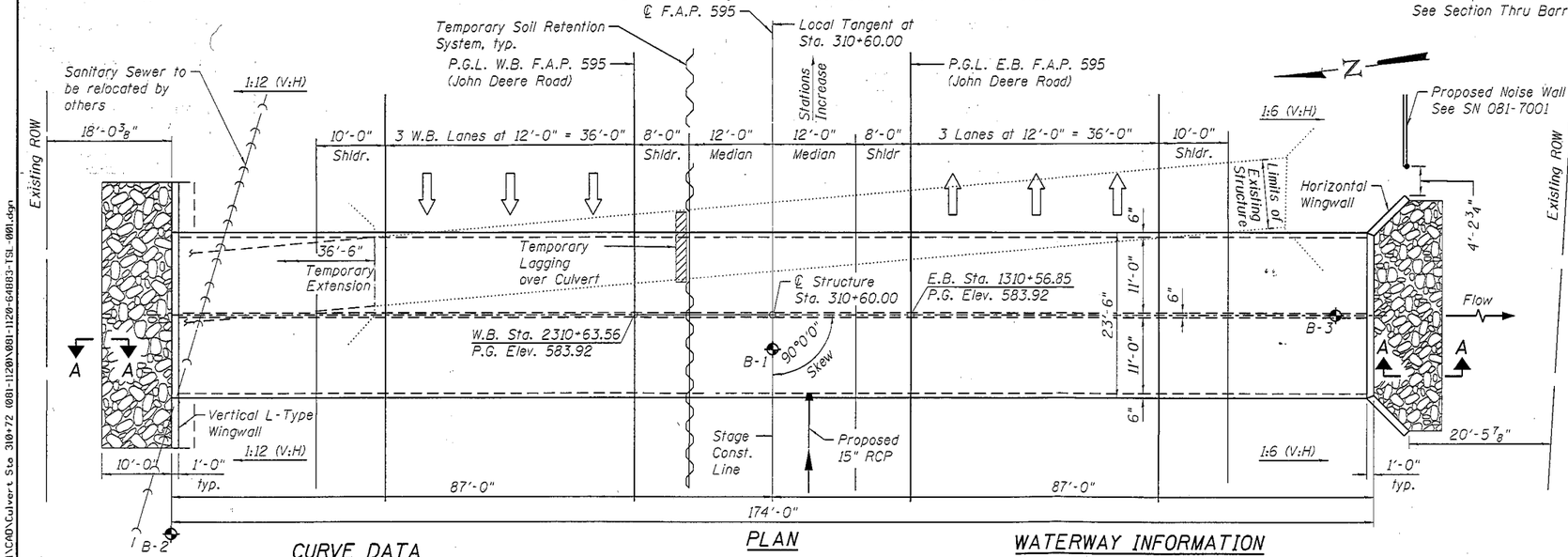

PLAN

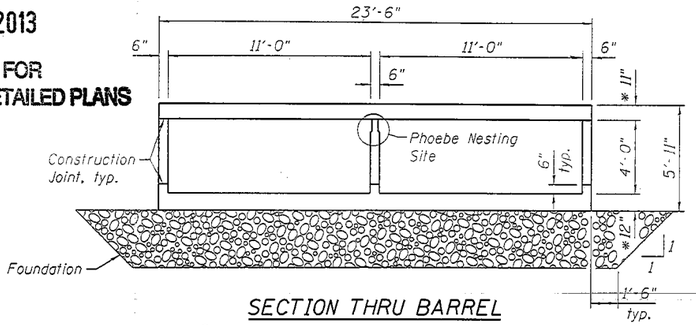

SECTION THRU BARREL

* Slab thickness may be refined in final design.

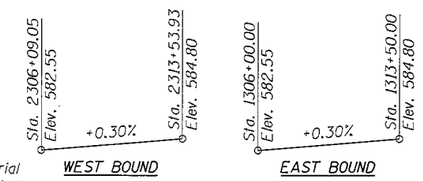

PROFILE GRADE

F.A.P. 595

DESIGN SPECIFICATIONS

2010 AASHTO LRFD Bridge Design Specifications with 2010 Interims

DESIGN STRESSES

FIELD UNITS

f'c = 3,500 psi

fy = 60,000 psi (Reinforcement)

HIGHWAY CLASSIFICATION

FAP Rte. 595

Functional Class: Other Principal Arterial

ADT: 39,700 (2013); 53,450 (2033)

ADTT: 5.5%

DHV: 5,345 (2033)

Design Speed: 60 m.p.h.

Posted Speed: 45 m.p.h.

2-Way Traffic

Directional Distribution: 50:50

LOADING HL-93

Allow 50#/sq. ft. for future wearing surface.

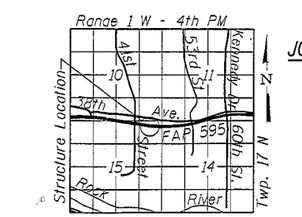

SECTION A-A

CURVE DATA

℄ F.A.P. 595

Δ = 26°26'36" (LT)

D = 00°44'03"

T = 1,833.41'

L = 3,601.50'

E = 212.48'

R = 7,803.53'

S.E. = 2.0%

P.C. = Sta. 306+02.40

P.T. = Sta. 342+03.89

P.I. = Sta. 324+35.80

DESIGN SCOUR ELEVATION TABLE

Design Scour Elevation (ft.)	Upstream	Downstream
	572.90	572.60

WATERWAY INFORMATION

Drainage Area = 314 Acres — Existing Low Grade Elev. 583.55 ft. @ Sta. 310+72; Proposed Low-Grade Elev. 583.80 ft. @ Sta. 310+72

Flood	Freq. Yr.	Q C.F.S.	Opening Sq. Ft. Exist.	Opening Sq. Ft. Prop.	Headwater El. Exist.	Headwater El. Prop.
	10	246	40	88	---	578.66
Design	50	467	40	88	583.98	580.67
Base	100	598	40	88	584.31	581.88
Overtopping (Existing)	50	358	40	88	583.55	---
Overtopping (Proposed)	100+	814	40	88	---	583.80
Max. Calc.	500	1017	40	88	585.09	584.09

LOCATION SKETCH

GENERAL PLAN

JOHN DEERE ROAD (IL 5) OVER DRAINAGE DITCH

F.A.P. RTE. 595

SECTION (142-1, 142)R

ROCK ISLAND COUNTY

STATION 310+60.00

S.N. 081-1120

Clorba Group, Inc. CONSULTING ENGINEERS 5051 North Cumberland Avenue, Suite 220, Chicago, Illinois 60656 Tel. 773.775.4000 Fax 773.775.4010 E-mail: dhayes@clorba.com

USER NAME = bsauter	DESIGNED - MHT	REVISED -
	CHECKED - BWS	REVISED -
PLOT SCALE = 20.000000 ' / in.	DRAWN - RD	REVISED -
PLOT DATE = 3/29/2013	CHECKED - DL	REVISED -

STATE OF ILLINOIS
DEPARTMENT OF TRANSPORTATION

SHEET NO. 1 OF 1 SHEETS

F.A.P. RTE.	SECTION	COUNTY	TOTAL SHEETS	SHEET NO.
595	(142-1, 142)R	ROCK ISLAND	1	1
		CONTRACT NO. 64B83		
		ILLINOIS FED. AID PROJECT		

N:\PROJ\0003393.00\CONTRACT_2\Design\Structural\CAD\Culvert Sta 310+72 (081-1120\081-1120-64B83-TSL-001.dgn