Bench Mark: Chiseled square on Southeast end of the M.L. King Bridge, on Southwest corner of concrete slab. Elev. 439.63.

Existing Structure: None.

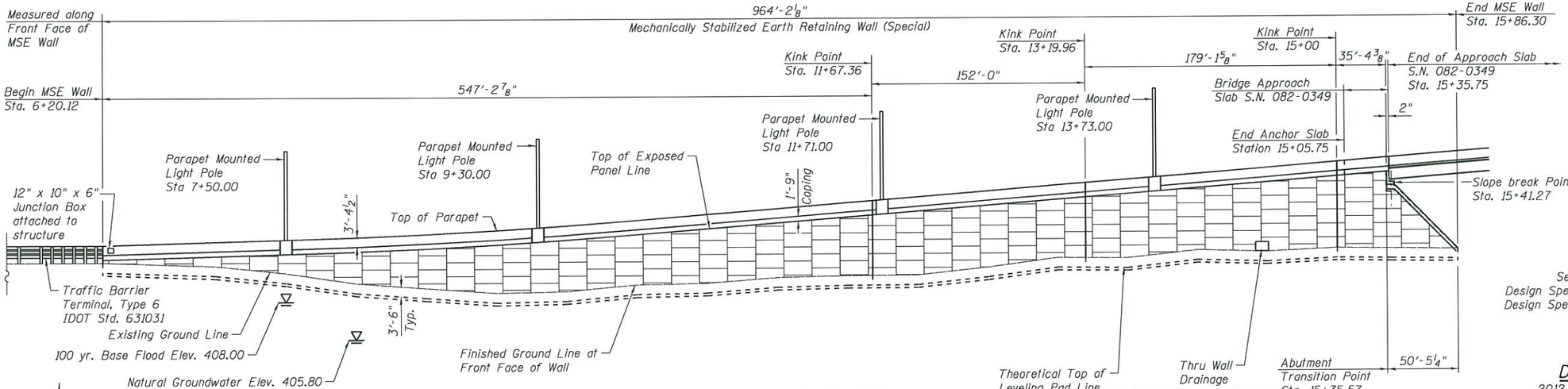

ELEVATION

(Shown along Front Face of MSE Wall. Looking at Front Face of MSE Wall)

HIGHWAY CLASSIFICATION

F.A.I. 64 - MLK Connecter
Functional Class: Ramp
ADT: 2,000 (2015), 2,500 (2035)
ADTT: 15%
DHV: 500 (2035)
Design Speed: 40 m.p.h.
Posted Speed: 40 m.p.h.
One-Way Traffic

SEISMIC DATA

Seismic Performance Zone (SPZ) = 2
Design Spectral Acceleration at 1.0 sec. (S_{D1}) = 0.24g
Design Spectral Acceleration at 0.2 sec. (S_{DS}) = 0.54g
Soil Site Class = D

DESIGN SPECIFICATIONS

2012 AASHTO LRFD Design Specifications, 6th Edition with 2013 Interims

APPROVED
JUL 08 2014
AS A BASIS FOR
PREPARATION OF DETAILED PLANS

DESIGN STRESSES

FIELD UNITS

f'c = 3,500 psi
fy = 60,000 psi (Reinforcement)
fy = 50,000 psi (Permanent Steel Sheet Piling)

PRECAST UNITS

f'c = 4,500 psi (Precast Panels)

LIGHTWEIGHT CELLULAR CONCRETE FILL

Maximum Cast Density 37 pcf
fc' = 5,000 psf

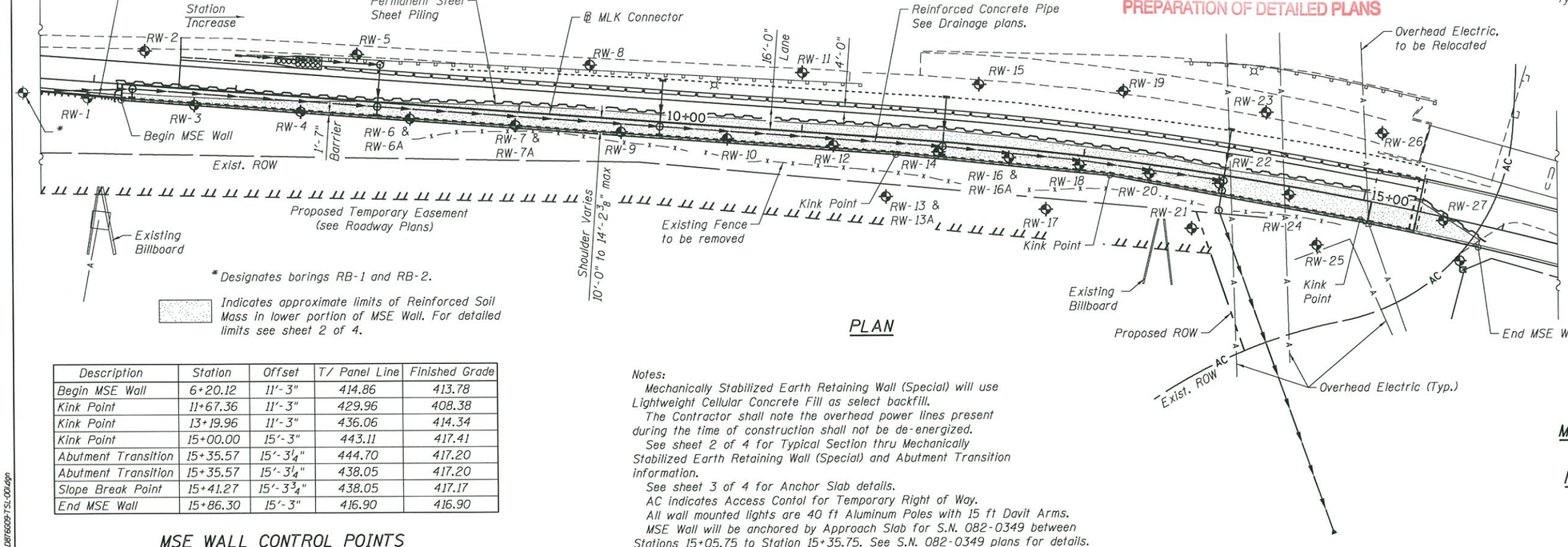

* Designates borings RB-1 and RB-2.

Indicates approximate limits of Reinforced Soil Mass in lower portion of MSE Wall. For detailed limits see sheet 2 of 4.

PLAN

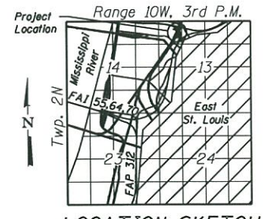

LOCATION SKETCH

Description	Station	Offset	T/ Panel Line	Finished Grade
Begin MSE Wall	6+20.12	11'-3"	414.86	413.78
Kink Point	11+67.36	11'-3"	429.96	408.38
Kink Point	13+19.96	11'-3"	436.06	414.34
Kink Point	15+00.00	15'-3"	443.11	417.41
Abutment Transition	15+35.57	15'-3 1/4"	444.70	417.20
Abutment Transition	15+35.57	15'-3 1/4"	438.05	417.20
Slope Break Point	15+41.27	15'-3 3/4"	438.05	417.17
End MSE Wall	15+86.30	15'-3"	416.90	416.90

MSE WALL CONTROL POINTS

(Offsets are Referenced from MLK Baseline to Front Face of Wall)

Notes:

Mechanically Stabilized Earth Retaining Wall (Special) will use Lightweight Cellular Concrete Fill as select backfill.

The Contractor shall note the overhead power lines present during the time of construction shall not be de-energized.

See sheet 2 of 4 for Typical Section thru Mechanically Stabilized Earth Retaining Wall (Special) and Abutment Transition information.

See sheet 3 of 4 for Anchor Slab details.

AC indicates Access Contol for Temporary Right of Way.

All wall mounted lights are 40 ft Aluminum Poles with 15 ft Davit Arms.

MSE Wall will be anchored by Approach Slab for S.N. 082-0349 between Stations 15+05.75 to Station 15+35.75. See S.N. 082-0349 plans for details.

GENERAL PLAN
MLK CONNECTOR OVER IL RTE. 3, UPRR AND TRRA
F.A.I. 64 - SECTION 82-(1,4)B-1
ST. CLAIR COUNTY
STATION 6+20.12 TO 15+86.30
STRUCTURE NO. 082-W314

FILE NAME = 082W314-D876609-TSL-001.dgn

LOCHMUELLER GROUP 1926 S.R. Bradley R. Smith Drive, Troy, ILLINOIS 62082, PHONE (618) 667-1400	USER NAME = bbovee	DESIGNED - BB	REVISED -	STATE OF ILLINOIS DEPARTMENT OF TRANSPORTATION
	Illinois Design Firm Number 184.001670	CHECKED - JD	REVISED -	
	PLOT SCALE = 0.1667 ' / in.	DRAWN - EDW	REVISED -	
	PLOT DATE = 7/3/2014	CHECKED - CJF	REVISED -	SHEET NO. 1 OF 4 SHEETS

F.A.I. RTE.	SECTION	COUNTY	TOTAL SHEETS	SHEET NO.
64	82-(1,4)B-1	ST. CLAIR		
		CONTRACT NO. 76G09		
	ILLINOIS FED. AID PROJECT			

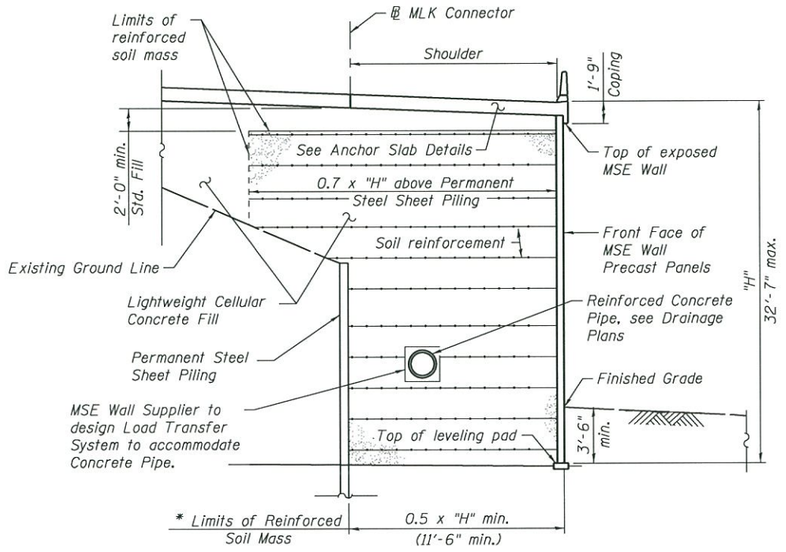

TYPICAL SECTION THRU MSE WALL

* The MSE wall supplier's internal stability design shall account for the anchorage slab's bearing pressure surcharge of 1.0 ksf and horizontal sliding force of 0.5 kips/ft of wall.

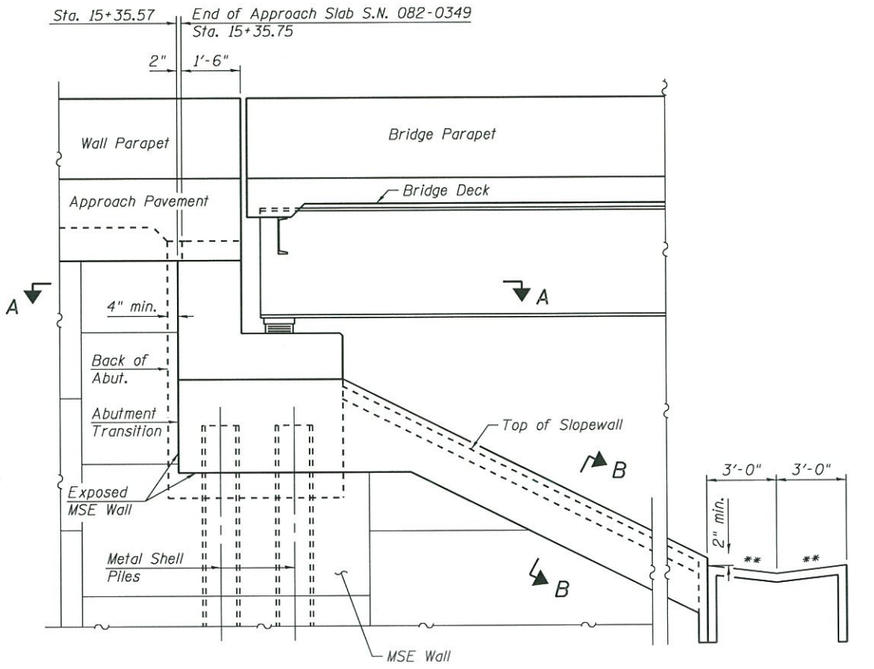

** 1:6 (V:H)

END VIEW AT ABUTMENT

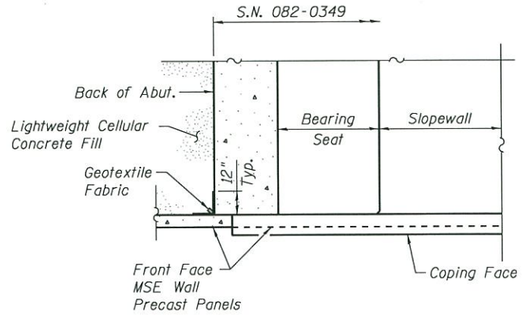

SECTION A-A

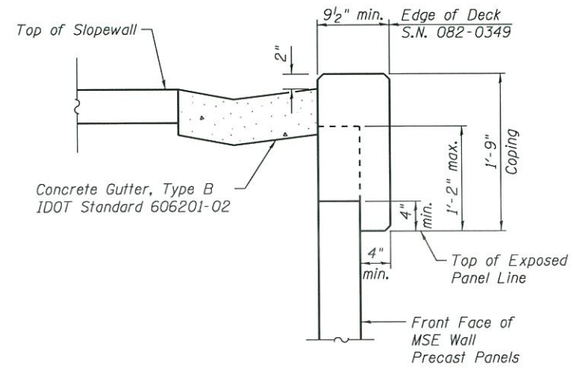

SECTION B-B

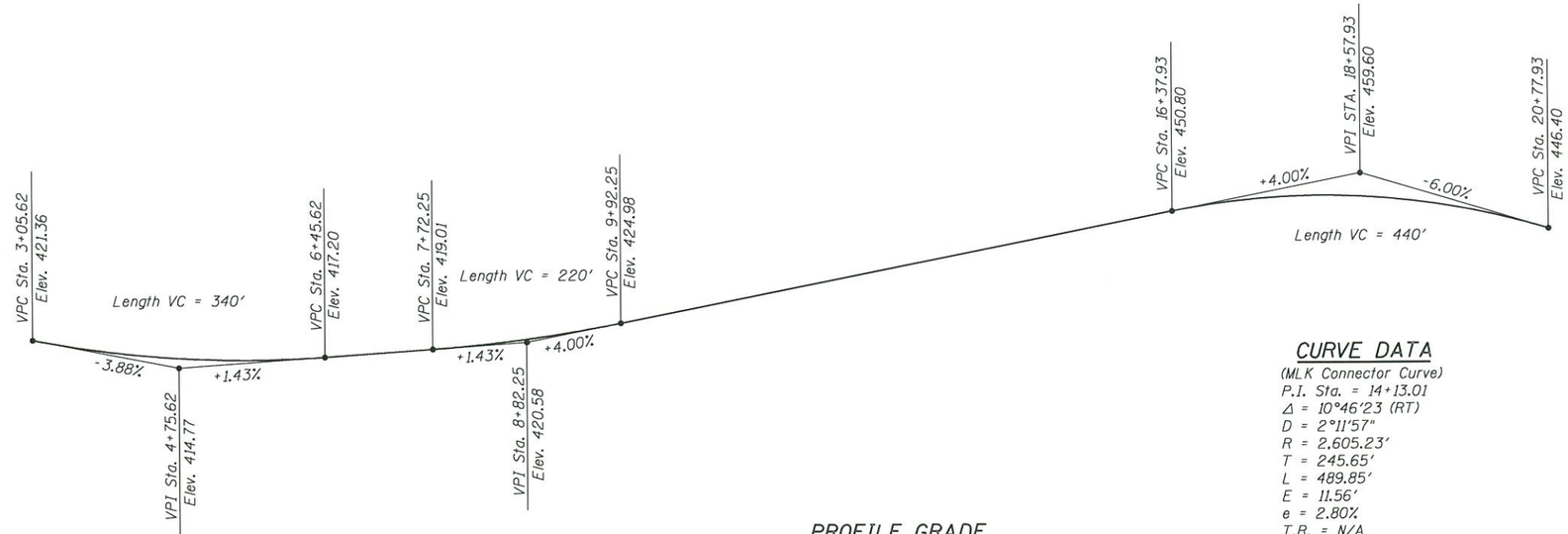

PROFILE GRADE

(Along ℄ MLK Connector)

CURVE DATA

(MLK Connector Curve)
P.I. Sta. = 14+13.01
Δ = 10°46'23 (RT)
D = 2°11'57"
R = 2,605.23'
T = 245.65'
L = 489.85'
E = 11.56'
e = 2.80%
T.R. = N/A
S.E. Run = 77.00'
P.C. Sta. = 11+67.36
P.C.C. Sta. = 16+57.21

APPROVED
JUL 0 8 2014
AS A BASIS FOR
PREPARATION OF DETAILED PLANS

DETAILS
MLK CONNECTOR OVER IL RTE. 3, UPRR AND TRRA
F.A.I. 64 - SECTION 82-(1,4)B-1
ST. CLAIR COUNTY
STATION 6+20.12 TO 15+86.30
STRUCTURE NO. 082-W314

FILE NAME = 082W314-DETAILS-TSL-002.dgn

LOCHMUELLER GROUP
1928 S.R. Bradley R. Smith Drive
Troy, ILLINOIS 62082
PHONE (618) 667-1400

USER NAME = bbovee	DESIGNED - BB	REVISED -	
Illinois Design Firm Number 184.001670	CHECKED - JD	REVISED -	
PLOT SCALE = 0.1667 ' / in.	DRAWN - EDW	REVISED -	
PLOT DATE = 7/3/2014	CHECKED - CJF	REVISED -	

STATE OF ILLINOIS
DEPARTMENT OF TRANSPORTATION

SHEET NO. 2 OF 4 SHEETS

F.A.I. RTE.	SECTION	COUNTY	TOTAL SHEETS	SHEET NO.
64	82-(1,4)B-1	ST. CLAIR		
		CONTRACT NO. 76G09		
	ILLINOIS FED. AID PROJECT			

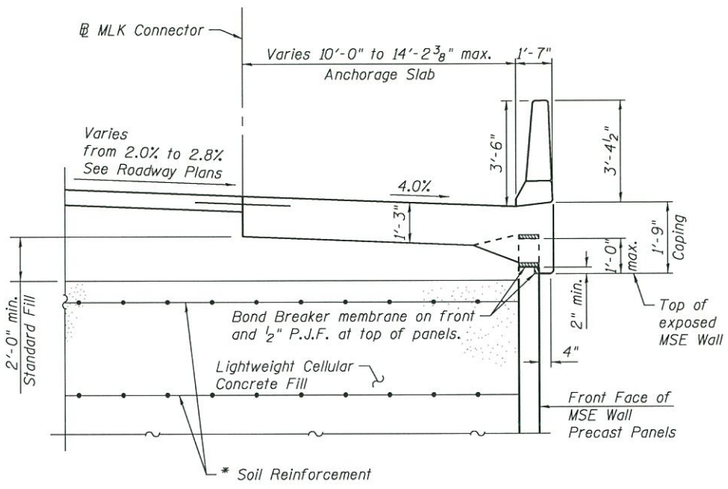

ANCHOR SLAB DETAILS AT ROADWAY

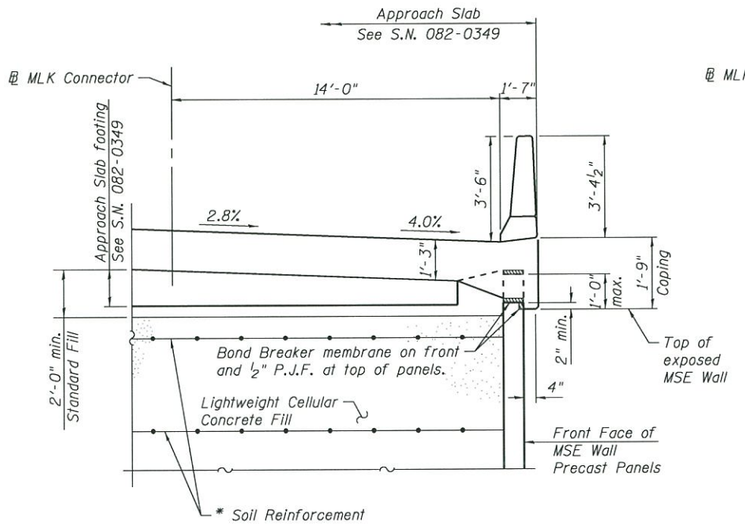

ANCHOR SLAB DETAILS AT APPROACH FOOTING

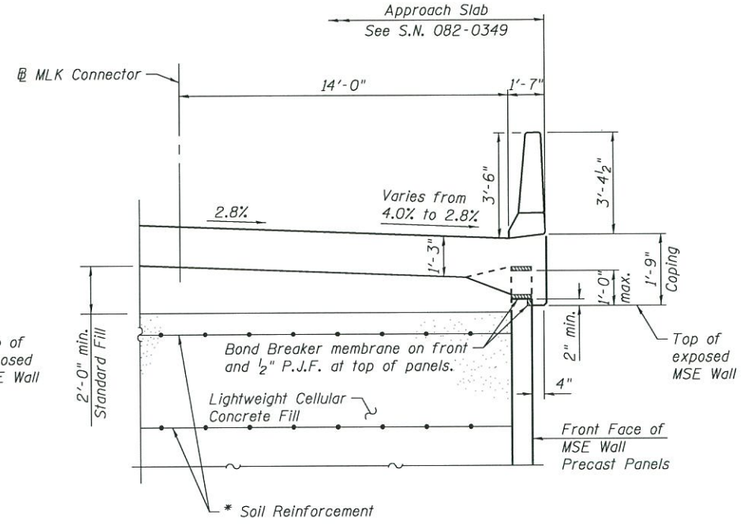

ANCHOR SLAB DETAILS AT APPROACH SLAB

* The M.S.E. wall supplier's internal stability design shall account for the anchorage slab's bearing pressure surcharge of 1.0 ksf and horizontal sliding force of 0.5 kips/ft of wall.

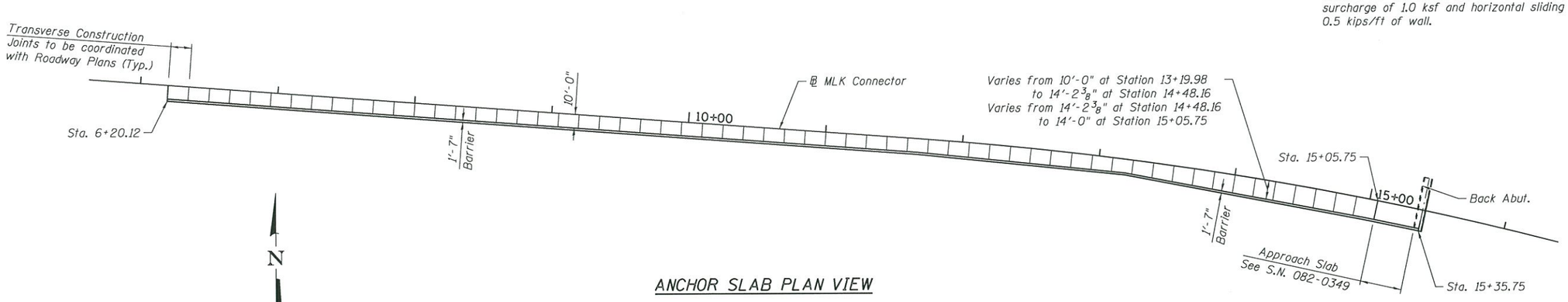

ANCHOR SLAB PLAN VIEW

APPROVED

JUL 0 8 2014

AS A BASIS FOR
PREPARATION OF DETAILED PLANS

DETAILS
MLK CONNECTOR OVER IL RTE. 3,
UPRR AND TRRA
F.A.I. 64 - SECTION 82-(1,4)B-1
ST. CLAIR COUNTY
STATION 6+20.12 TO 15+86.30
STRUCTURE NO. 082-W314

FILE NAME = 082W314-0876609-TSL-003.dgn

LOCHMUELLER GROUP
1928 S.R. Bradley M. Smith Drive
Troy, ILLINOIS 62982
PHONE (618) 667-1400

USER NAME = bbovee	DESIGNED - BB	REVISED -	
Illinois Design Firm Number 184.001670	CHECKED - JD	REVISED -	
PLOT SCALE = 0.1667 ' / in.	DRAWN - EDW	REVISED -	
PLOT DATE = 7/3/2014	CHECKED - CJF	REVISED -	

STATE OF ILLINOIS
DEPARTMENT OF TRANSPORTATION

SHEET NO. 3 OF 4 SHEETS

F.A.I. RTE.	SECTION	COUNTY	TOTAL SHEETS	SHEET NO.
64	82-(1,4)B-1	ST. CLAIR		
		CONTRACT NO. 76G09		
	ILLINOIS FED. AID PROJECT			

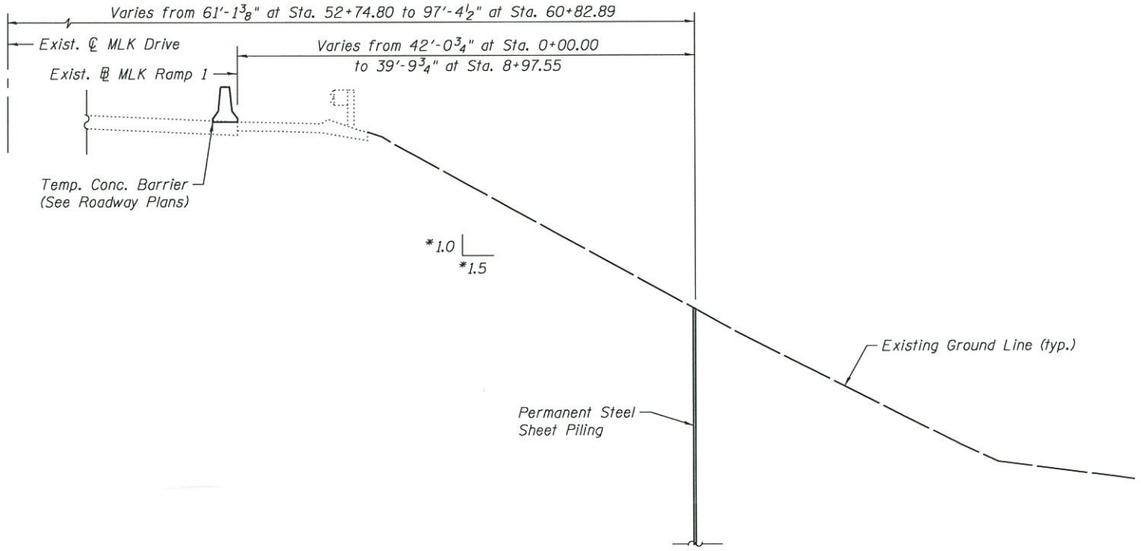

STAGE 1

Install Permanent Sheet Piling

* Maximum allowed slope

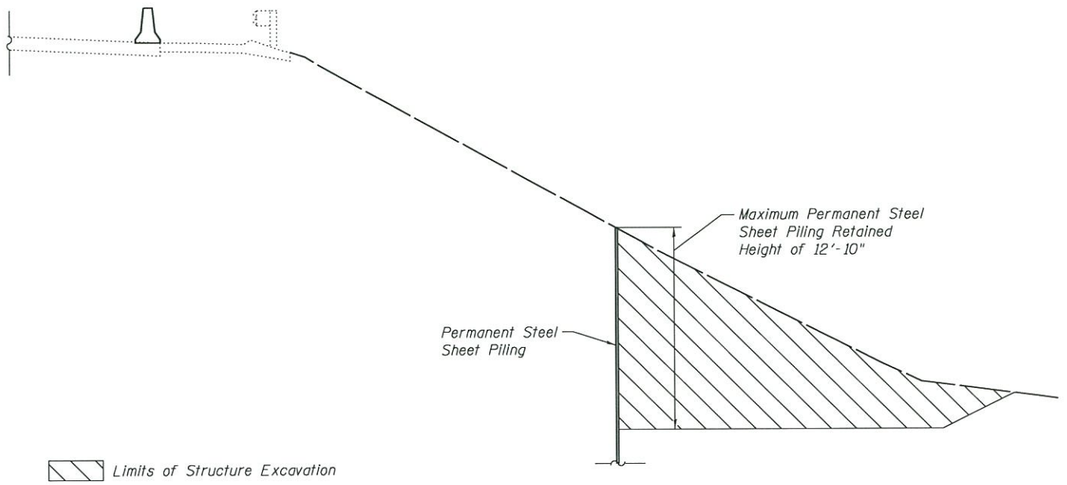

STAGE 2

Excavate for Lower Portion of MSE Wall

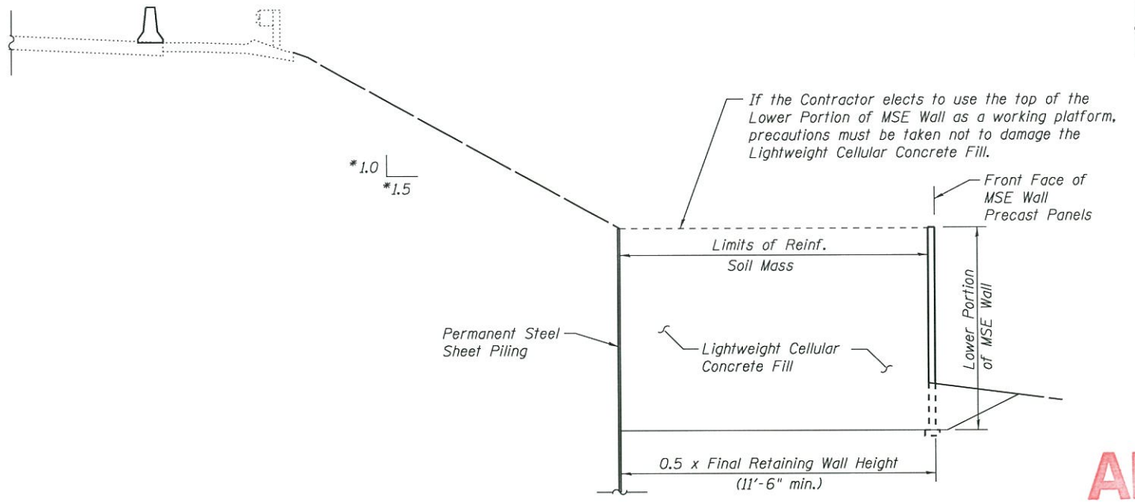

STAGE 3

Construct Lower Portion of MSE Wall

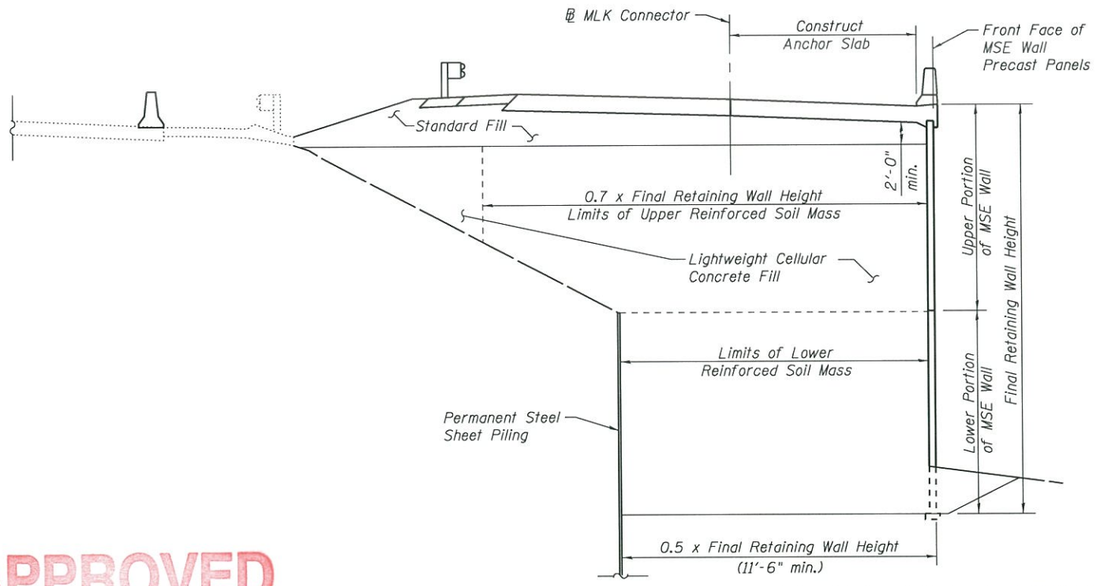

STAGE 4

Construct Upper Portion of MSE Wall and Anchor Slab

APPROVED

JUL 08 2014

AS A BASIS FOR PREPARATION OF DETAILED PLANS

CONSTRUCTION SEQUENCE DETAILS
MLK CONNECTOR OVER IL RTE. 3, UPRR AND TRRA
F.A.I. 64 - SECTION 82-(1,4)B-1
ST. CLAIR COUNTY
STATION 6+20.12 TO 15+86.30
STRUCTURE NO. 082-W314

FILE NAME = 082W314-D876G09-TSL-004.dgn

LOCHMUELLER GROUP 1928 S/A Bradley R. Smith Drive Troy, ILLINOIS 62062 PHONE (618) 667-1400	USER NAME = bbovee	DESIGNED - BB	REVISED -	STATE OF ILLINOIS DEPARTMENT OF TRANSPORTATION		F.A.I. RTE. 64	SECTION 82-(1,4)B-1	COUNTY ST. CLAIR	TOTAL SHEETS / SHEET NO.
	Illinois Design Firm Number 184.001670	CHECKED - JD	REVISED -					CONTRACT NO. 76G09	
	PLOT SCALE = 0.1667 ' / in.	DRAWN - EDW	REVISED -						
	PLOT DATE = 7/3/2014	CHECKED - CJF	REVISED -		SHEET NO. 4 OF 4 SHEETS		ILLINOIS FED. AID PROJECT		