Bench Mark: BM Lin17 Chiseled "X" on south bolt of round light pole foundation between I-55 southbound and existing I-55 ramp to Weber Road Mile marker 263.71 sign. Elev. 654.37

Existing Structure: Structure No. 099-0281 was constructed in 1991 under Section No. 99-IHB-1(K&R)88. In 2007, under Section 99 (1&2) WRS-3, the substructure was repaired, the crashwall extended and the raised median was reconfigured to add a left turn lane. Structure consists of two span 48" PPC I-beams supported on vaulted abutments and spread footing piers. Vaulted abutments consist of 36" PPC I-beams supported on metal shell piles. 242'-10½" back-to-back approach bents. 73'-2" out-to-out deck. Proposed Southbound structure to re-use existing beams, piers and abutments. Structures to be built using staged construction.

No Salvage

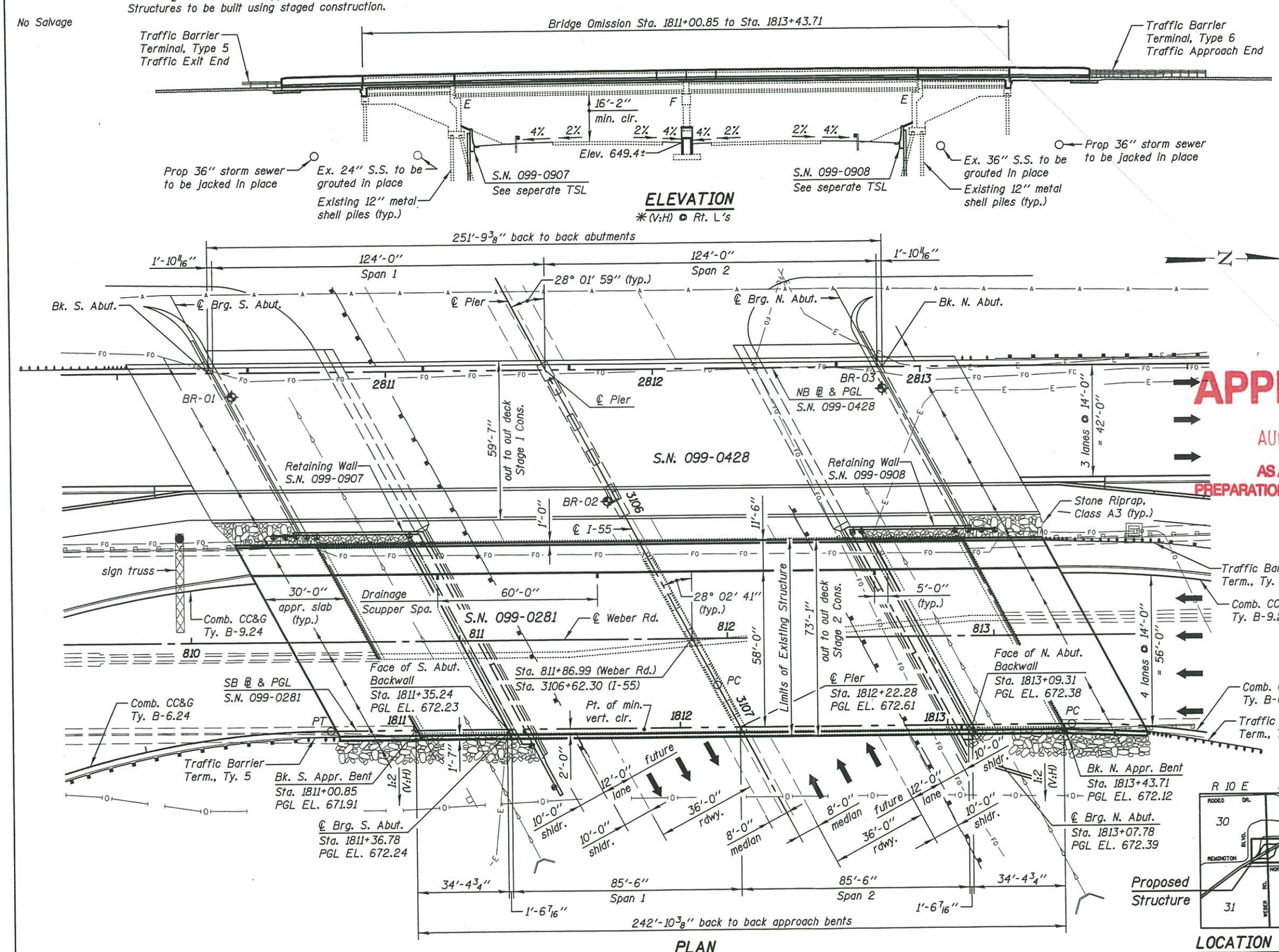

DESIGN SPECIFICATIONS

2002 AASHTO Standard Specifications for Highway Bridges

LOADING HS20-44

No allowance for future wearing surface.

DESIGN STRESSES

FIELD UNITS

f'_c = 4,000 psi (superstructure concrete)
f'_c = 3,500 psi
f_y = 60,000 psi (reinforcement)

EXISTING PRECAST PRESTRESSED UNITS

f'_c = 6,000 psi (48") 5,000 psi (36")
f'_{ci} = 4,400 psi (48") 4,000 psi (36")
f_{pu} = 270,000 psi (½" ϕ low lax strands)
f_{pbt} = 189,000 psi (½" ϕ low lax strands)

EXISTING FIELD UNITS

f'_c = 4,000 psi @ 28 days
f_y = 60,000 psi (reinforcement)
f_y = 36,000 psi AASHTO M183 steel (bearings)

SEISMIC DATA

Seismic Performance Category (SPC) = A
Bedrock Acceleration Coefficient (A) = 0.04g
Site Coefficient (S) = 1.0

APPROVED
AUG 31 2015
AS A BASIS FOR PREPARATION OF DETAILED PLANS

HIGHWAY CLASSIFICATION

F.A.P. Route 856 - Weber Road
Functional Class: Other Principal Arterial
ADT: 34,100 (2010); 52,000 (2040)
DHV: 5,200
ADTT: 8%
Design Speed: 35 mph
Posted Speed: 30 mph
Directional Distribution: 60:40

F.A.I. Route 55 - I-55
Functional Class: Interstate
ADT: 136,400 (2010); 146,000 (2040)
DHV: 8,040
ADTT: 12%
Design Speed: 70 mph
Posted Speed: 65 mph
Directional Distribution: 60:40

Legend

Soil Borings
F.F. Front Face
B.F. Back Face
S.U.P. Shared Use Path

Notes:

SN 099-0281 and SN 099-0428 are part of a Diverging Diamond Interchange (DDI).

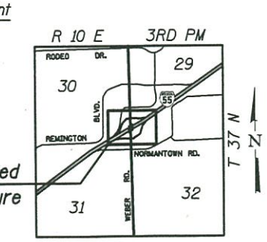

LOCATION SKETCH

GENERAL PLAN & ELEVATION
SOUTHBOUND WEBER ROAD OVER I-55
F.A.P. RTE. 856 SEC. (99-1HB-1) R-1
WILL COUNTY
STA. 1812+22.28
STRUCTURE NO. 099-0281

KNIGHT Engineers & Architects

SCALE - NONE	DESIGNED - TB	REVISED	
DATE - 8/3/2015	CHECKED - WPM	REVISED	
	DRAWN - SMA	REVISED	
	CHECKED - TB	REVISED	

STATE OF ILLINOIS
DEPARTMENT OF TRANSPORTATION

SHEET NO. 1 OF 4 SHEETS

F.A.I/P RTE.	SECTION	COUNTY	TOTAL SHEETS	SHEET NO.
*	(99-1HB-1) R-1	WILL		
		CONTRACT NO. 60X10		

* FAI 55, FAP 856 ILLINOIS FED. AID PROJECT

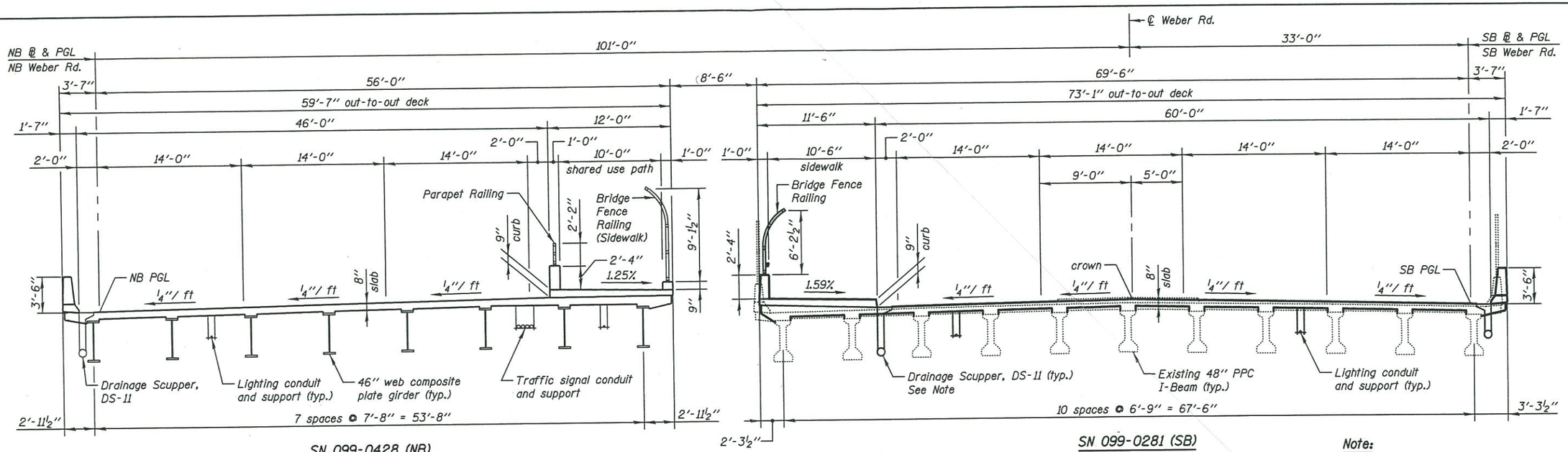

SN 099-0428 (NB)
For Information Only

SN 099-0281 (SB)

CROSS SECTION
(Looking North)
(See sheet 4 for staging)

Note:
A drainage system will be required and will outlet thru a vertical downspout at each abutment.

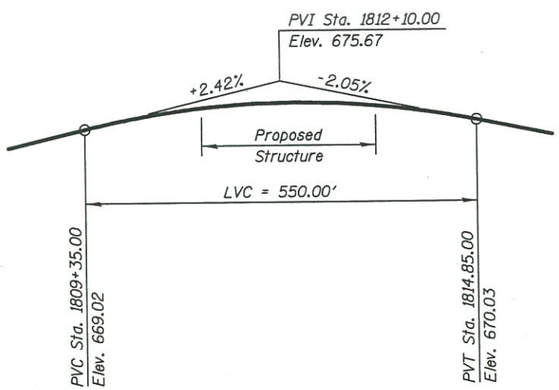

℄ SOUTHBOUND WEBER ROAD - PROPOSED PROFILE GRADE LINE

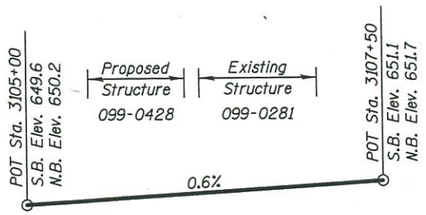

I-55 S.B. & N.B. - EXISTING PROFILE GRADE LINE

CURVE DATA

℄ SB Weber Road
Curve SB-4
Δ = 16° 38' 20" (RT)
D = 17° 09' 16"
R = 334.00'
T = 48.84'
L = 96.99'
E = 3.55'
SE = normal crown
PC STA. 1809+72.26
PT STA. 1810+69.25
PI STA. 1810+21.10

℄ SB Weber Road
Curve SB-5
Δ = 11° 13' 29" (RT)
D = 17° 09' 16"
R = 334.00'
T = 32.82'
L = 65.43'
E = 1.61'
SE = normal crown
PC STA. 1813+46.76
PT STA. 1814+12.20
PI STA. 1813+79.58

℄ I-55
Curve I-55-2
Δ = 5° 33' 40" (LT)
D = 0° 21' 17"
R = 16,149.49'
T = 784.36'
L = 1,567.49'
E = 19.04'
SE = normal crown
PC STA. 3106+81.93
PT STA. 3122+49.42
PI STA. 3114+66.30

CONSTRUCTION SEQUENCE

1) Construct proposed bridge SN 099-0428

   a) Construct retaining walls SN 099-0907 and SN 099-0908, as required, to construct abutments and slopewalls.

2) With traffic shifted to bridge SN 099-0428:

   a) Rehabilitate existing bridge SN 099-0281

   b) Complete construction of retaining walls SN 099-0907 and SN 099-0908

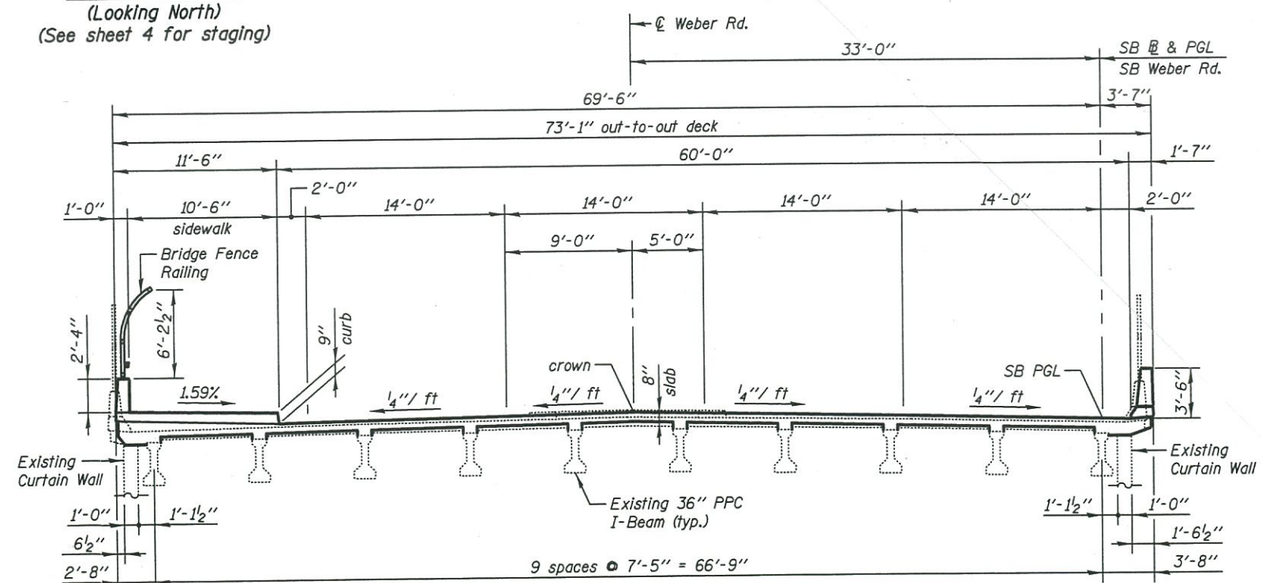

CROSS SECTION THRU APPROACH SPAN
(Looking North)

APPROVED
AUG 31 2015
AS A BASIS FOR PREPARATION OF DETAILED PLANS

CROSS SECTION
SOUTHBOUND WEBER ROAD OVER I-55
F.A.P. RTE. 856 SEC. (99-1HB-1) R-1
WILL COUNTY
STA. 1812+22.28
STRUCTURE NO. 099-0281

KNIGHT Engineers & Architects		DESIGNED - TB	REVISED	STATE OF ILLINOIS DEPARTMENT OF TRANSPORTATION
		CHECKED - WPM	REVISED	
	SCALE - NONE	DRAWN - SMA	REVISED	
	DATE - 8/3/2015	CHECKED - TB	REVISED	

F.A.I/P RTE.	SECTION	COUNTY	TOTAL SHEETS	SHEET NO.
*	(99-1HB-1) R-1	WILL		
		CONTRACT NO. 60X10		
* FAI 55, FAP 856	ILLINOIS	FED. AID PROJECT		

SHEET NO. 2 OF 4 SHEETS

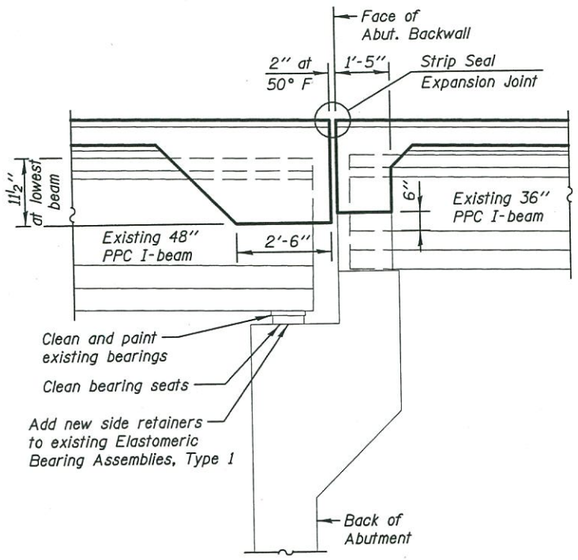

AT EXISTING ABUTMENT

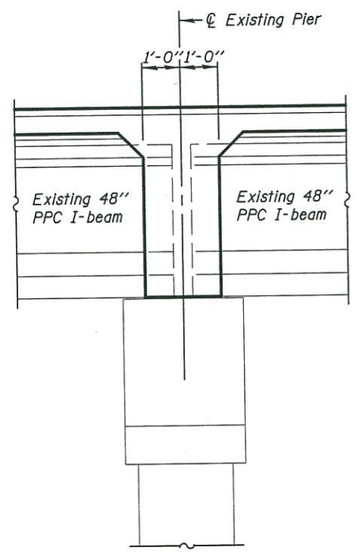

AT EXISTING PIER

SECTIONS THRU SUPERSTRUCTURE

(Horiz. dim. @ Rt. L's)

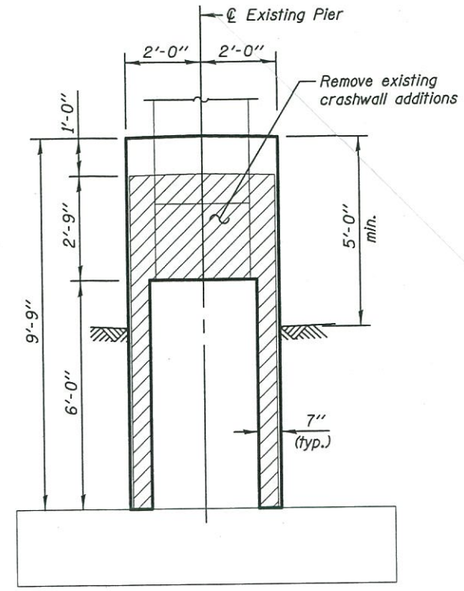

SECTION THRU EXISTING CRASHWALL

(Horiz. dim. @ Rt. L's)

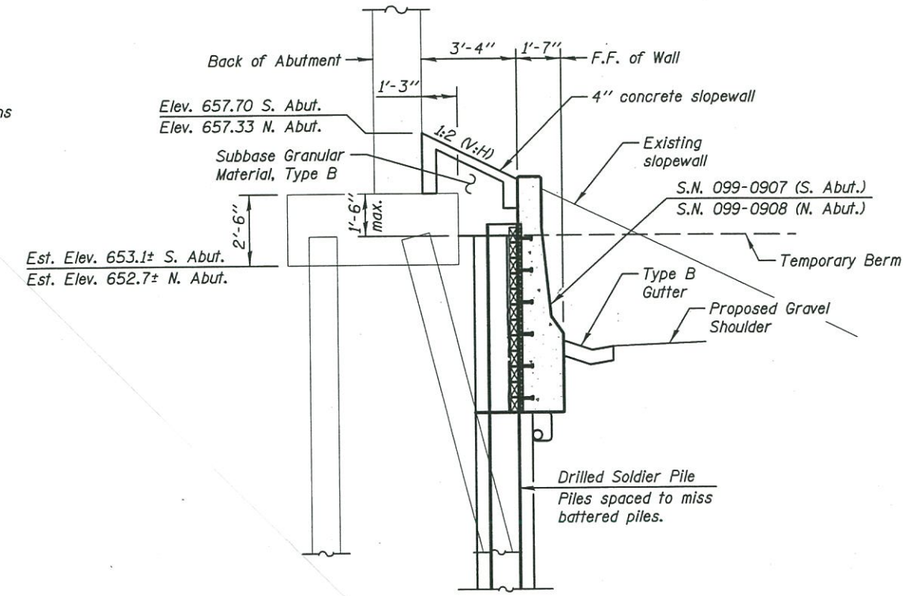

SECTION THRU EXISTING ABUTMENT

(Horiz. dim. @ Rt. L's)

Repair Note:

After removal of deck and diaphragms, beam ends will require repair.

Abutments, including curtain wall and approach bents, and pier will require structural repair and epoxy injection.

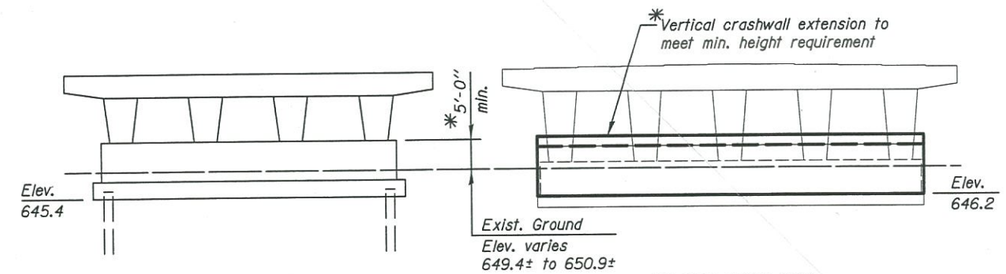

SN 099-0428 (NB)
For Information Only

SN 099-0281 (SB)

PIER SKETCH

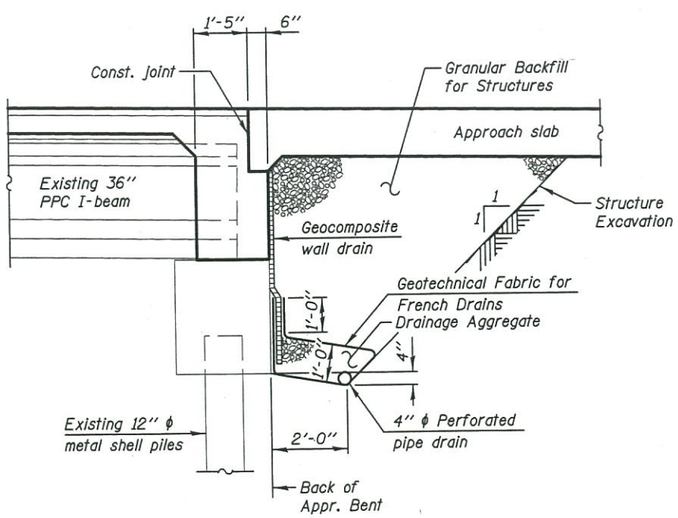

SECTION THRU EXISTING APPROACH BENT

(Horiz. dim. @ Rt. L's)

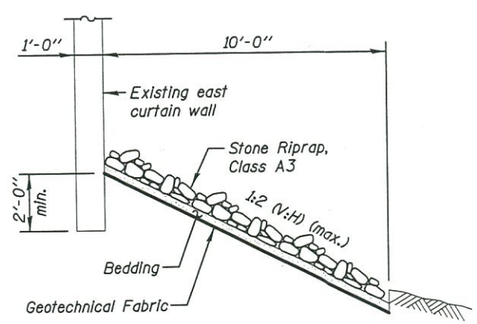

AT EXISTING EAST CURTAIN WALL

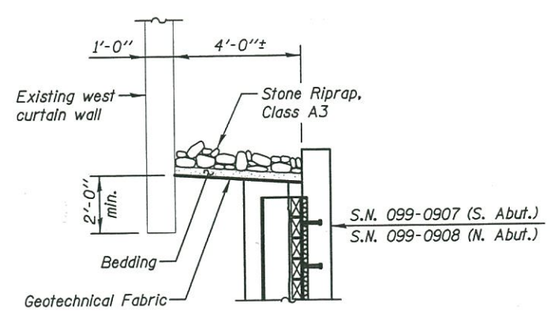

BETWEEN STRUCTURES

STONE RIPRAP DETAIL

(Horiz. dim. @ Rt. L's)

APPROVED

AUG 31 2015

AS A BASIS FOR PREPARATION OF DETAILED PLANS

DETAILS

SOUTHBOUND WEBER ROAD OVER I-55
F.A.P. RTE. 856 SEC. (99-1HB-1) R-1
WILL COUNTY
STA. 1812+22.28
STRUCTURE NO. 099-0281

KNIGHT Engineers & Architects		DESIGNED - TB	REVISED
		CHECKED - WPM	REVISED
	SCALE - NONE	DRAWN - SMA	REVISED
	DATE - 8/3/2015	CHECKED - TB	REVISED

STATE OF ILLINOIS
DEPARTMENT OF TRANSPORTATION

SHEET NO. 3 OF 4 SHEETS

F.A.I/P RTE.	SECTION	COUNTY	TOTAL SHEETS	SHEET NO.
*	(99-1HB-1) R-1	WILL		
		CONTRACT NO. 60X10		
* FAI 55, FAP 856	ILLINOIS	FED. AID PROJECT		

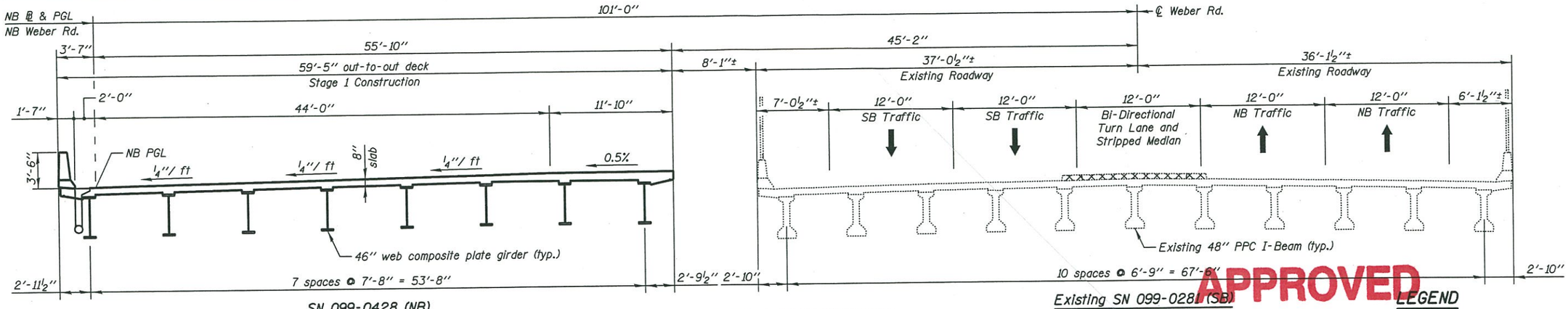

STAGE 1 CONSTRUCTION
(Looking North)

APPROVED
AUG 31 2015
AS A BASIS FOR
PREPARATION OF DETAILED PLANS

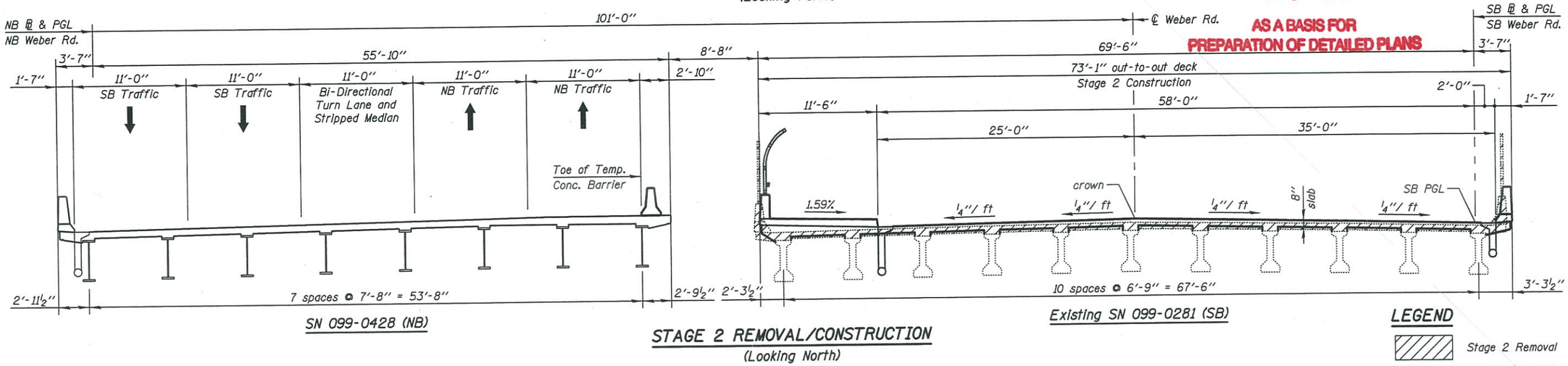

STAGE 2 REMOVAL/CONSTRUCTION
(Looking North)

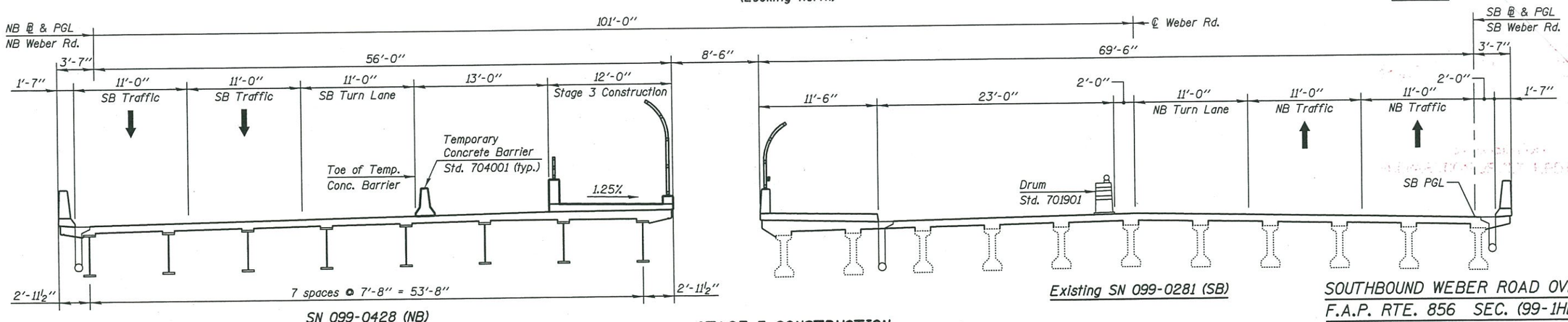

STAGE 3 CONSTRUCTION
(Looking North)

SOUTHBOUND WEBER ROAD OVER I-55
F.A.P. RTE. 856 SEC. (99-1HB-1) R-1
WILL COUNTY
STA. 1812+22.28

KNIGHT Engineers & Architects		DESIGNED - TB	REVISED
		CHECKED - WPM	REVISED
	SCALE - NONE	DRAWN - SMA	REVISED
	DATE - 8/3/2015	CHECKED - TB	REVISED

STATE OF ILLINOIS
DEPARTMENT OF TRANSPORTATION

STAGING DETAILS
STRUCTURE NUMBER 099-0281 (SB)
SHEET NO. 4 OF 4 SHEETS

F.A.I/P RTE.	SECTION	COUNTY	TOTAL SHEETS	SHEET NO.
*	(99-1HB-1) R-1	WILL		
		CONTRACT NO. 60X10		
* FAI 55, FAP 856	ILLINOIS	FED. AID PROJECT		