Bench Mark: Square cut on middle step of SE wingwall of bridge over Richards WB roadway. Elev. = 558.98

Existing Structure: S.N. 099-0064 (EB) and S.N. 099-0065 (WB) were built in 1963 under Federal Aid Interstate Route 80 Project I-80-4(38) Section 99-4HB-1. The structures were repaired in 1990 under Federal Aid Interstate Route I-80 Project C-91-169-88 Section 99-4RS-2 & 99 (3B, 4B-1, 4HB, 4HB-1, 4VB) BR-88. The structures were repaired in 1998 under Federal Aid Interstate Route 80 Project C-91-225-93 Section 99-4-IRS-3 and 99-4-IVB-I. The structures were repaired in 2001 under Federal Aid Interstate Route 80 Project C-91-507-00 Section (99 (1, 2, 3, 4) & 4-1) RS-7. The dual structures consist of 3 simple spans measuring 165'-9" back to back of abutments. Out to out deck width of 36'-0" at 08°-36'-00" skew (left forward) that is supported by two W36 beams (exterior) and four W30 beams (interior) at the end spans, and six W36 beams at the middle span. Spans are supported on concrete stub abutments and wing walls founded on spread footings, and two hammerhead piers founded on spread footings. The existing structures to be removed and replaced.

Traffic to be maintained utilizing Staged Construction.

No salvage.

HIGHWAY CLASSIFICATION

F.A.I. Rte. 80 EB
Functional Class: Interstate
ADT: 52,000 (2010); 56,600 (2030 no-build)
DHV: 4,040 (2030 no-build)
ADTT: 9,570 (2010)
Design Speed: 60 m.p.h.
Posted Speed: 55 m.p.h.
One-Way Traffic

F.A.I. Rte. 80 WB
Functional Class: Interstate
ADT: 45,600 (2010); 49,700 (2030 no-build)
DHV: 3,420 (2030 no-build)
ADTT: 9,710 (2010)
Design Speed: 60 m.p.h.
Posted Speed: 55 m.p.h.
One-Way Traffic

F.A.U. Rte. 354 (Richards St.)
Functional Class: Minor Arterial/Major Collector
ADT: 11,090 (2010); 15,050 (2030 no-build)
DHV: 1,300 (2040 no-build)
ADTT: 660 (2010)
Design Speed: 40 m.p.h.
Posted Speed: 35 m.p.h.
Two-Way Traffic
Directional Distribution: 50:50

DESIGN SPECIFICATIONS

2012 AASHTO LRFD Bridge Design Specifications, 6th Edition with 2013 Interims

LOADING HL-93

Allow 50 psf for future wearing surface.

SEISMIC DATA

Seismic Performance Zone (SPZ) = 1
Design Spectral Acceleration at 1.0 sec. (S_{D1}) = 0.068g
Design Spectral Acceleration at 0.2 sec. (S_{DS}) = 0.125g
Soil Site Class = C

DESIGN STRESSES

FIELD UNITS

f'c = 3,500 psi
fy = 60,000 psi (Reinforcement)
fy = 50,000 psi (M270 Grade 50)

APPROVED
OCT 09 2014
AS A BASIS FOR
PREPARATION OF DETAILED PLANS

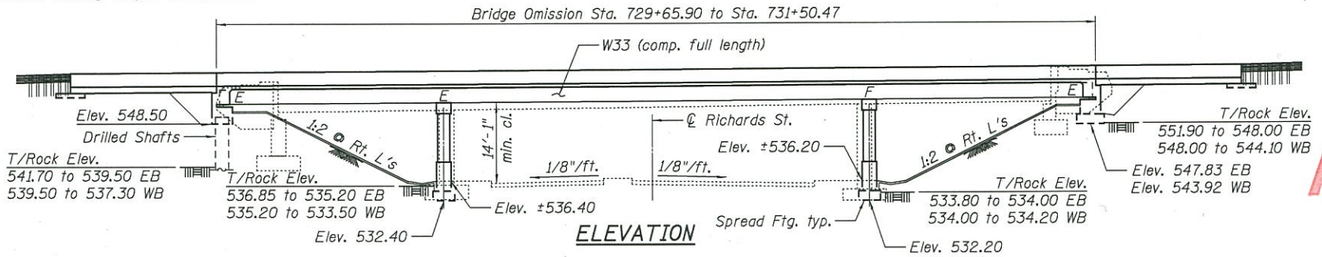

ELEVATION

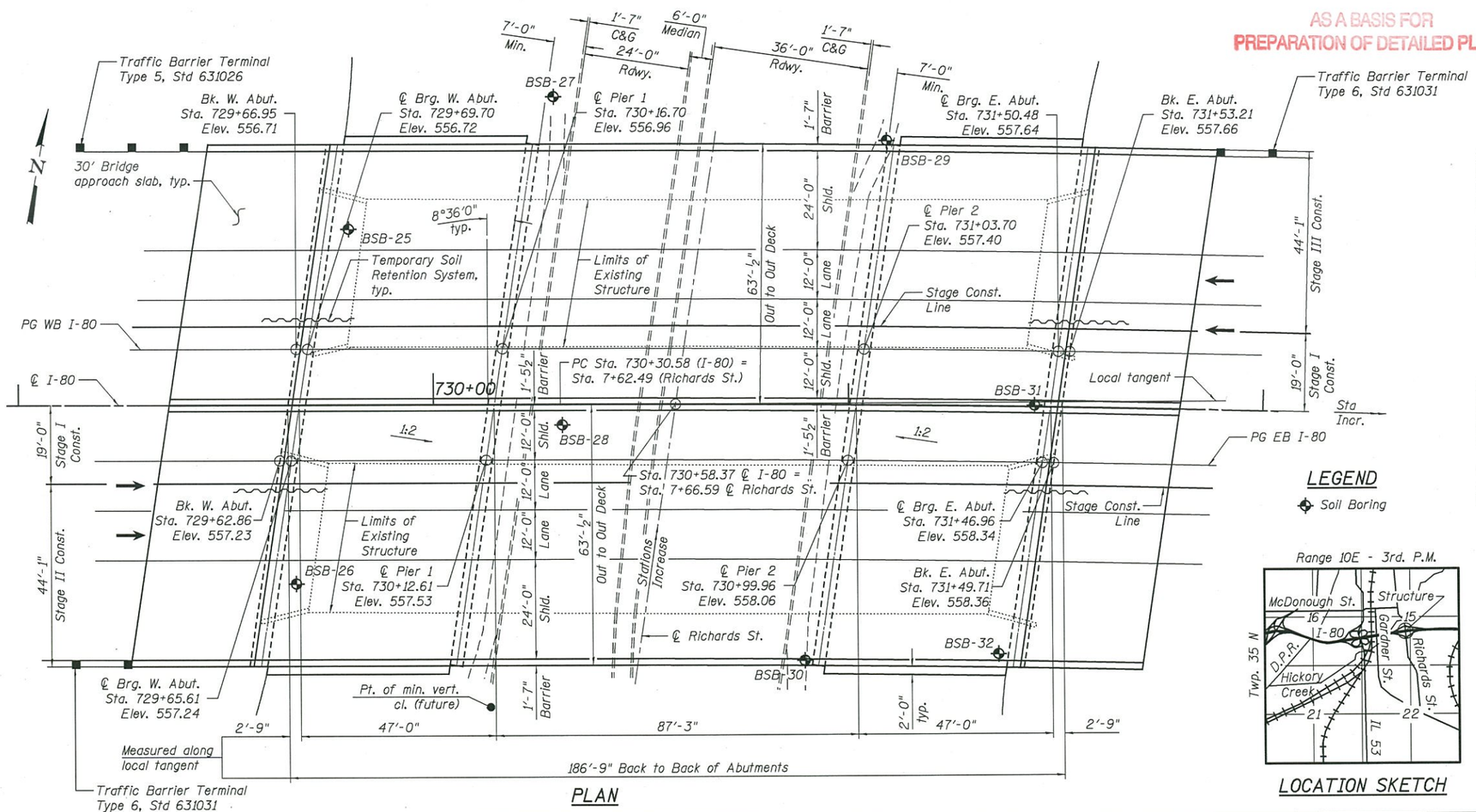

PLAN

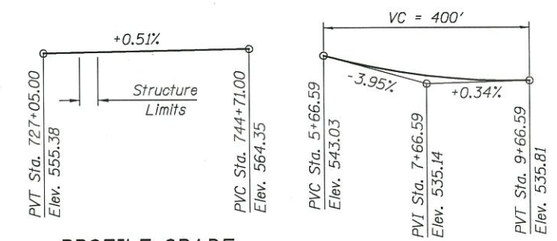

PROFILE GRADE
(Along PG WB I-80)

PROFILE GRADE
(Along ℄ Richards St.)

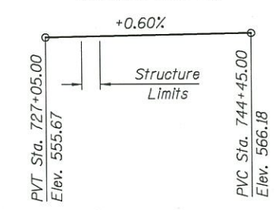

PROFILE GRADE
(Along PG EB I-80)

CURVE DATA

(Along proposed ℄ I-80 Curve 9)

PI STA. = 734+61.07
Δ = 8° 35' 29" (RT)
D = 0° 59' 59"
R = 5,731.00'
T = 430.49'
L = 859.36'
E = 16.15'
e = 3.3%
T.R. = 40'
S.E. RUN = 128'
P.C. STA = 730+30.58
P.T. STA = 738+89.94

LEGEND

Soil Boring

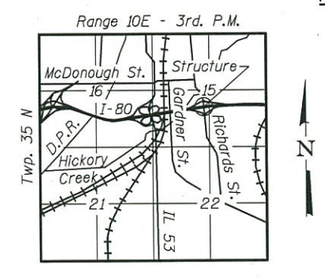

LOCATION SKETCH

GENERAL PLAN & ELEVATION
I-80 OVER F.A.U. RTE. 354 (RICHARDS ST.)
F.A.I. RTE. 80 - SECTION 2013-008B
WILL COUNTY
STATION 730+58.37
STRUCTURE NO. 099-0900 (EB)
STRUCTURE NO. 099-0901 (WB)

HBP Illinois Partners	USER NAME = dmachalaVB:(Rdwy_Lisle)	DESIGNED DMM	REVISED
		CHECKED BRT	REVISED
	PLOT SCALE = 30.2000 ' / in.	DRAWN DMM	REVISED
	PLOT DATE = 9/23/2014	CHECKED BRT	REVISED

STATE OF ILLINOIS
DEPARTMENT OF TRANSPORTATION

SHEET NO. 1 OF 4 SHEETS

F.A.I. RTE.	SECTION	COUNTY	TOTAL SHEETS	SHEET NO.
80	2013-008B	WILL	*TOTAL	
		CONTRACT NO. 60W34		
		ILLINOIS FED. AID PROJECT		

pw:\\hntbw356.hntb.org:PWGrest_Lakes\Documents\Chicago Projects\46314 I-80\Phase II- Near Term Improvement (Group A)\Design\CADD\Structure (TS&L) Sheets\0990900-0990901-60W34-60W35-TSL-001.dgn

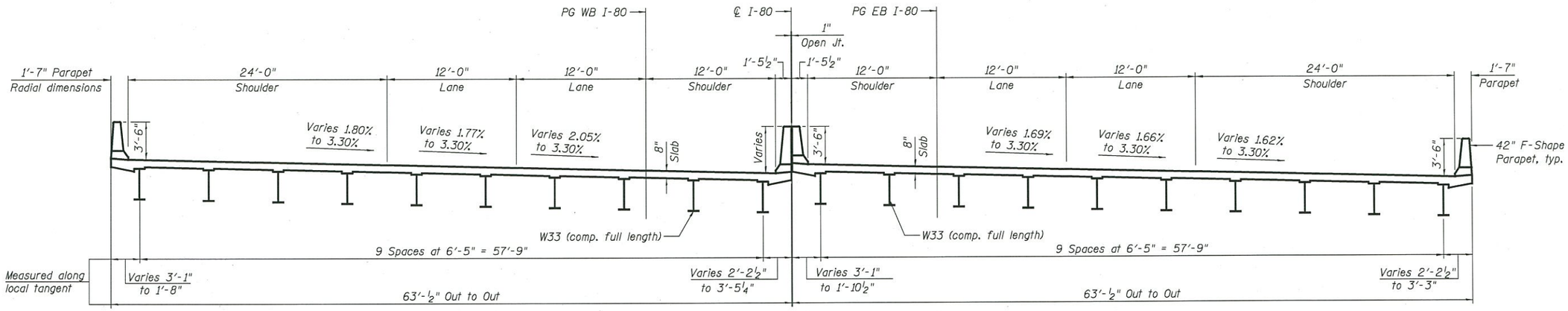

CROSS SECTION
(Looking East)

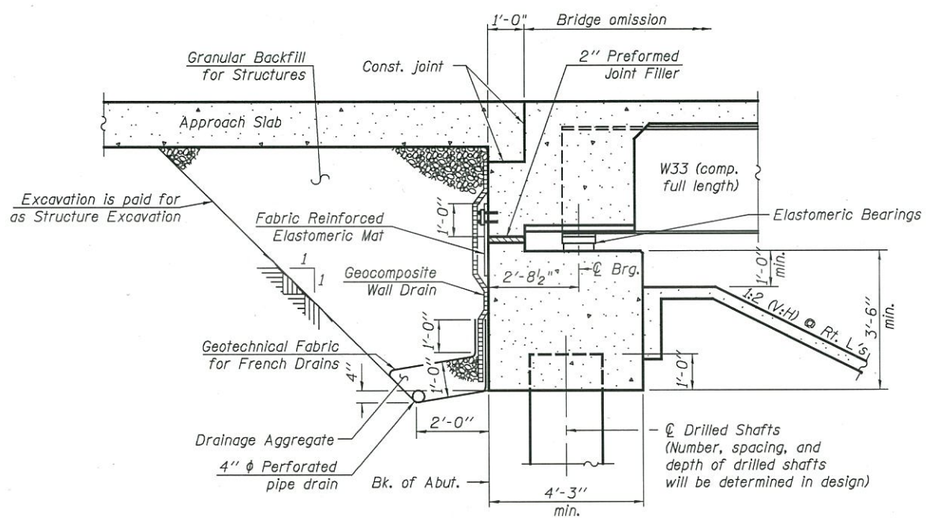

SECTION THRU SEMI-INTEGRAL WEST ABUTMENT
(Horiz. dim. @ Rt. L's)

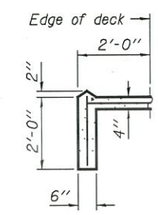

SECTION A-A

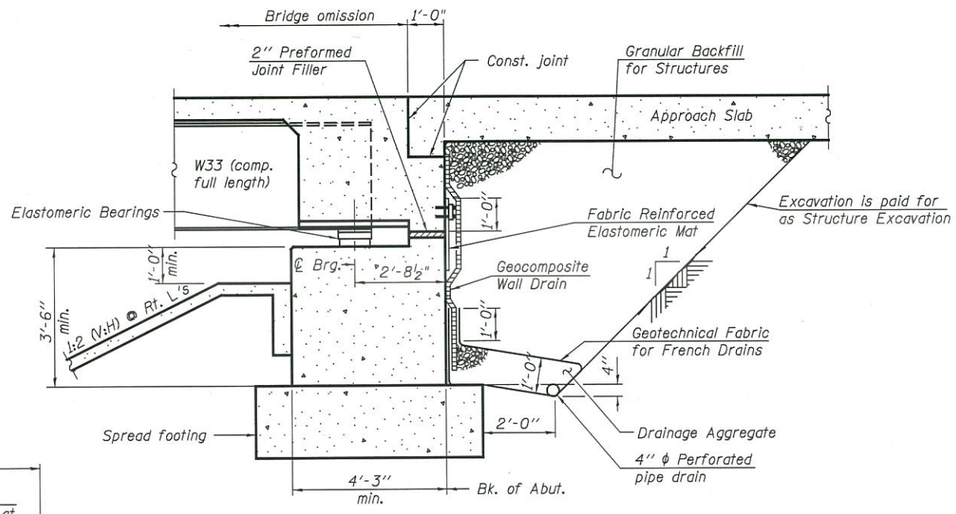

SECTION THRU SEMI-INTEGRAL EAST ABUTMENT
(Horiz. dim. @ Rt. L's)

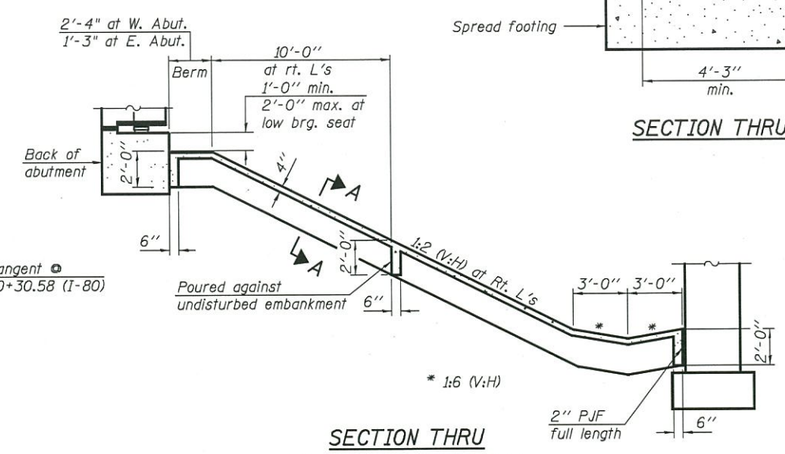

SECTION THRU CONCRETE SLOPEWALL

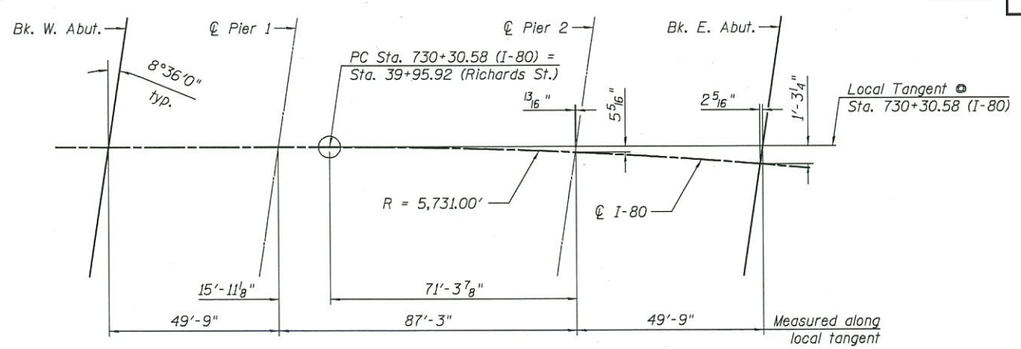

OFFSET SKETCH

APPROVED

OCT 09 2014

AS A BASIS FOR PREPARATION OF DETAILED PLANS

DETAILS
I-80 OVER F.A.U. RTE. 354 (RICHARDS ST.)
F.A.I. RTE. 80 - SECTION 2013-008B
WILL COUNTY
STATION 730+58.37
STRUCTURE NO. 099-0900 (EB)
STRUCTURE NO. 099-0901 (WB)

HBP Illinois Partners	USER NAME = dmachalaV8i(Rdwy_Lisle)	DESIGNED DMM	REVISED	STATE OF ILLINOIS DEPARTMENT OF TRANSPORTATION		F.A.I. RTE.	SECTION	COUNTY	TOTAL SHEETS	SHEET NO.
		CHECKED BT	REVISED			80	2013-008B	WILL	*TOTAL	
	PLOT SCALE = 10.0000 ' / in.	DRAWN DMM	REVISED					CONTRACT NO. 60W34		
	PLOT DATE = 9/23/2014	CHECKED BT	REVISED		SHEET NO. 2 OF 4 SHEETS			ILLINOIS FED. AID PROJECT		

pw:\\hntbw356.hntb.org:PWGreat_Lakes\Documents\Chicago Projects\46314 I-80\Phase II- Near Term Improvement (Group A)\Design\CADD\Structure (TS&L) Sheets\0990900-0990901-60W34-60W35-TSL-001.dgn

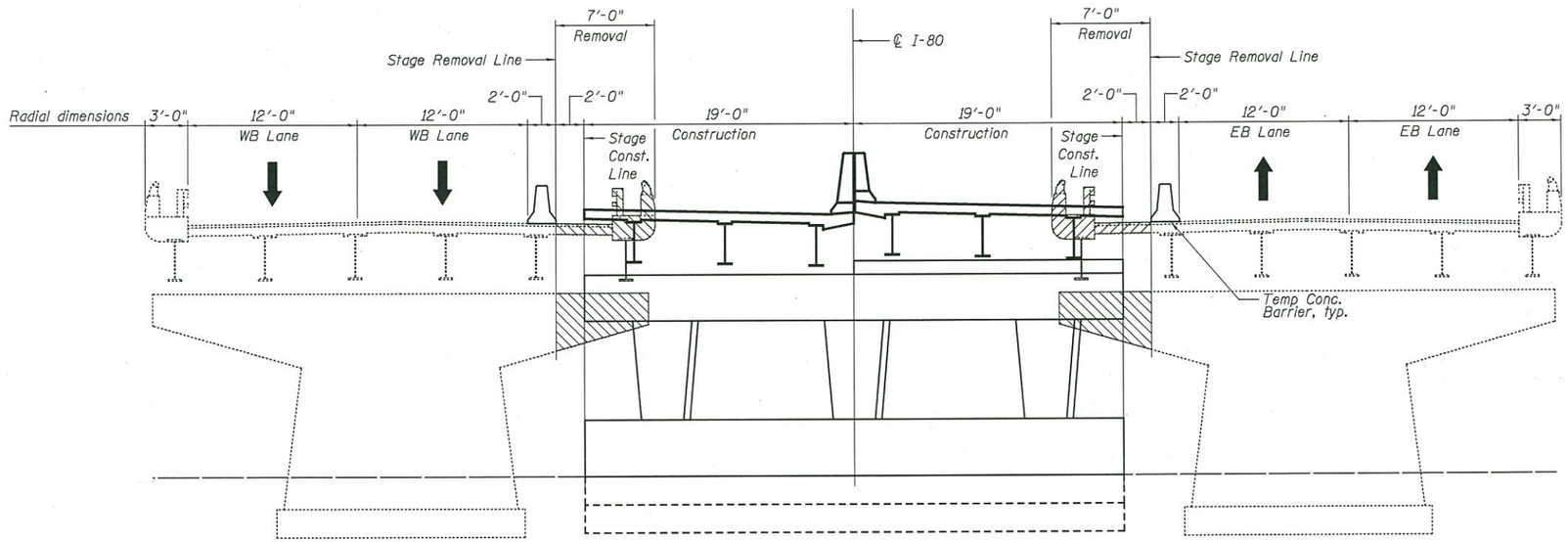

STAGE I REMOVAL AND CONSTRUCTION

(Looking East)

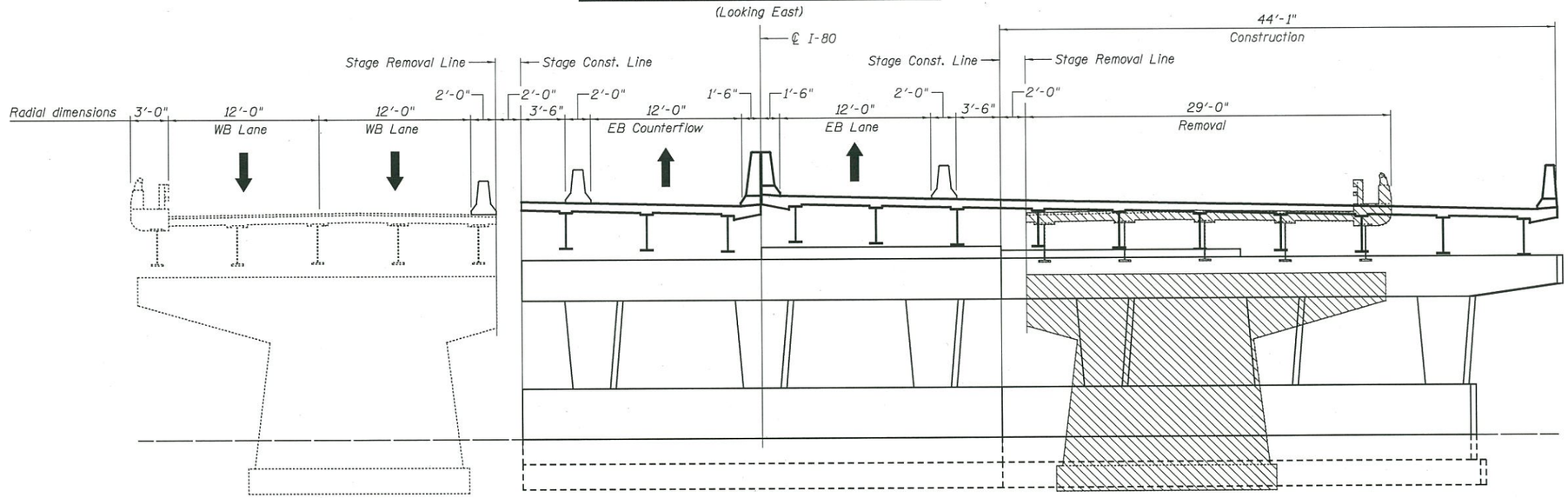

STAGE II REMOVAL AND CONSTRUCTION

(Looking East)

APPROVED

OCT 09 2014

AS A BASIS FOR
PREPARATION OF DETAILED PLANS

Note:

Hatched areas indicated "Removal of Existing Structures"

STAGE CONSTRUCTION DETAILS 1 OF 2
I-80 OVER F.A.U. RTE. 354 (RICHARDS ST.)
F.A.I. RTE. 80 - SECTION 2013-008B
WILL COUNTY
STATION 730+58.37
STRUCTURE NO. 099-0900 (EB)
STRUCTURE NO. 099-0901 (WB)

HBP Illinois Partners	USER NAME = dmachalaV8i(Rdwy_Lisle)	DESIGNED DMM	REVISED
		CHECKED BT	REVISED
	PLOT SCALE = 10.0000 ' / in.	DRAWN DMM	REVISED
	PLOT DATE = 9/23/2014	CHECKED BT	REVISED

STATE OF ILLINOIS
DEPARTMENT OF TRANSPORTATION

SHEET NO. 3 OF 4 SHEETS

F.A.I. RTE.	SECTION	COUNTY	TOTAL SHEETS	SHEET NO.
80	2013-008B	WILL	*TOTAL	
		CONTRACT NO. 60W34		
		ILLINOIS	FED. AID PROJECT	

pw:\\hntbw356.hntb.org:PWGreat_Lakes\Documents\Chicago Projects\46314 I-80\Phase II- Near Term Improvement (Group A)\Design\CADD\Structure (TS&L) Sheets\0990900-0990901-60W34-60W35-TSL-001.dgn

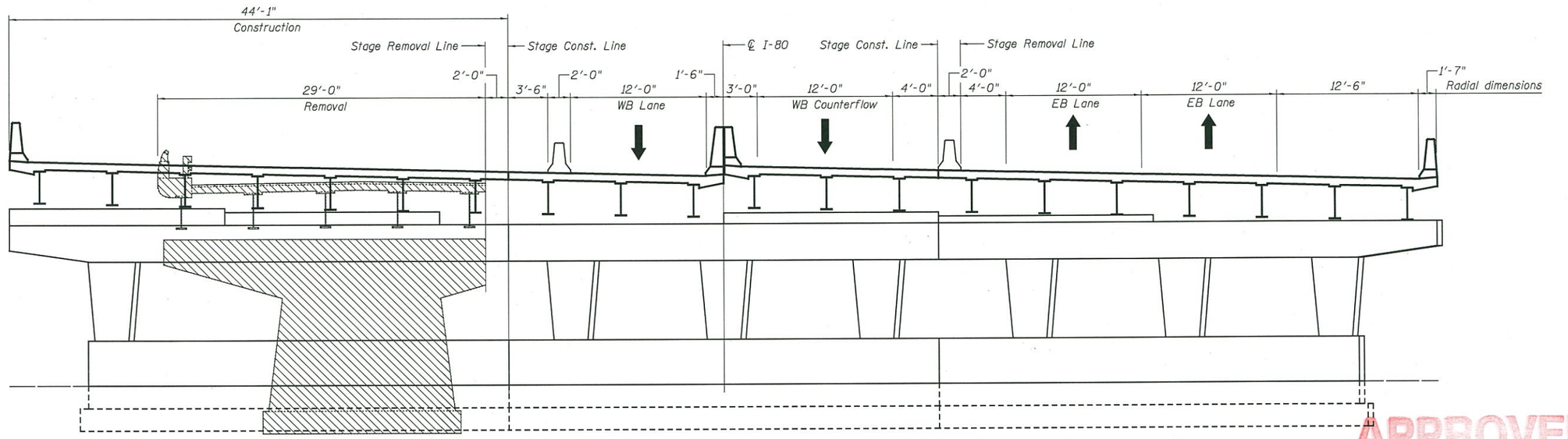

STAGE III REMOVAL AND CONSTRUCTION

(Looking East)

APPROVED

OCT 09 2014

AS A BASIS FOR

PREPARATION OF DETAILED PLANS

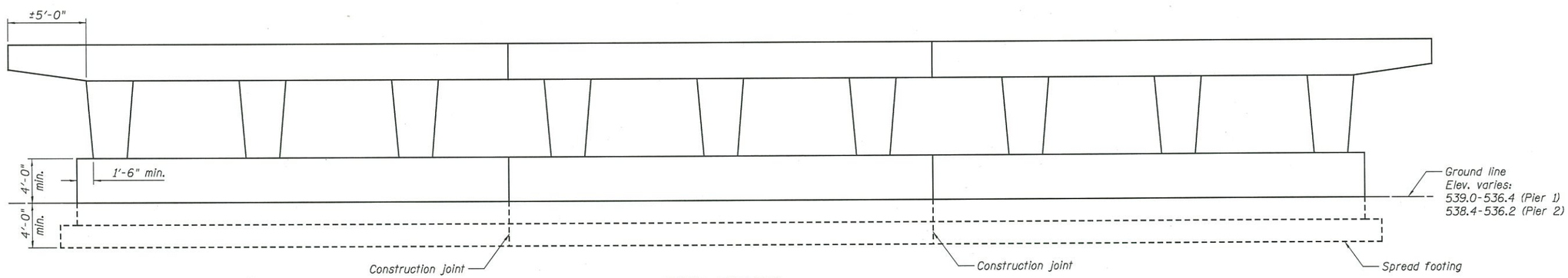

PIER SKETCH

STAGE CONSTRUCTION DETAILS 2 OF 2

I-80 OVER F.A.U. RTE. 354 (RICHARDS ST.)

F.A.I. RTE. 80 - SECTION 2013-008B

WILL COUNTY

STATION 730+58.37

STRUCTURE NO. 099-0900 (EB)

STRUCTURE NO. 099-0901 (WB)

HBP Illinois Partners	USER NAME = dmachala V8i(Rdwy_Lisle)	DESIGNED DMM	REVISED
		CHECKED BT	REVISED
	PLOT SCALE = 10.0000 ' / in.	DRAWN DMM	REVISED
	PLOT DATE = 9/23/2014	CHECKED BT	REVISED

STATE OF ILLINOIS
DEPARTMENT OF TRANSPORTATION

SHEET NO. 4 OF 4 SHEETS

F.A.I. RTE.	SECTION	COUNTY	TOTAL SHEETS	SHEET NO.
80	2013-008B	WILL	*TOTAL	
		CONTRACT NO. 60W34		
		ILLINOIS FED. AID PROJECT		

pw:\\hntbw356.hntb.org:PWGreat_Lakes\Documents\Chicago Projects\46314 I-80\Phase II- Near Term Improvement (Group A)\Design\CADD\Structure (TS&L) Sheets\0990900-0990901-60W34-60W35-TSL-001.dgn