Illinois Department of Transportation
2300 South Dirksen Parkway / Springfield, Illinois / 62764

To: Users of the Highway Standards

Subject: Revision #211

Date: September 25, 2009

Revision #211 of the Highway Standards, effective January 1, 2010, is now available on the Department's website.
The revisions are as follows:

Removed	Inserted	Remarks
Standards by Subject/Title January 1, 2009	Standards by Subject/Title January 1, 2010	Updated.
Division 200 Index January 1, 2009	Division 200 Index January 1, 2010	Updated.
280001-04	280001-05	Added J-hooks to silt filter fence. Added detail for attachment of two silt filter fences. Modified Aggregate Ditch Check.
Division 300 Index January 1, 2009	Division 300 Index January 1, 2010	Updated.
Division 400 Index January 1, 2009	Division 400 Index January 1, 2010	Updated.
420401-07	420401-08	Added reference to improved subgrade.
Division 500 Index January 1, 2009	Division 500 Index January 1, 2010	Updated.
542536-02	542536-03	Corrected 3'-11" vertical dimension line in Section A-A.
542601-01	542601-02	Corrected inside dimension line for pipe diameter.
Division 600 Index January 1, 2009	Division 600 Index January 1, 2010	Updated.
609001-04	609001-05	Added bolt-down feature to frame and grate. Omitted steel frame.

Removed	Inserted	Remarks
609006-04	609006-05	Added bolt-down feature to frame and grate. Omitted steel frame. Modified Section A-A.
610001-04	610001-05	Added bolt-down feature to frame and grate. Omitted steel frame.
631006-06	631006-07	Increased steel tube length and corrected hole locations in tube.
631011-05	631011-06	Corrected hole locations in steel tube.
631031-07	631031-08	Omitted parapet wood block-out. Reduced curb length to 15'. Added alternate post size.
631032-04	631032-05	Corrected dimension on connection angle with regard to hole spacing. Added alternate post size.
Division 700 Index January 1, 2009	Division 700 Index January 1, 2010	Updated.
701400-03	701400-04	Added note to omit signs mounted in median when median width is less than 10' (3 m).
701411-05	701411-06	Added General Note to allow omission of pavement marking tape for work not exceeding three days.
701451	701451-01	Corrected dimension portion of sign numbers.
704001-05	704001-06	Revised General Notes to refer to Standard 635011 for dimensions of Type C marker.
Division 800 Index January 1, 2009	Division 800 Index January 1, 2010	Updated.
	825001	New standard.
	825006	New standard.

Removed	Inserted	Remarks
	825011	New standard.
	826016	New standard.
	825021	New standard.
	825026	New standard.
	836001	New standard.
	837001	New standard.
878001-07	878001-08	Revised note for foundation depth in table. Revised sizes of rebars.
Division 000 Index January 1, 2009	Division 000 Index January 1, 2010	Updated.
Division BLR Index January 1, 2009	Division BLR Index January 1, 2010	Updated.
BLR-26-1	BLR 26-2	Changed post length from 6'-9" to 6'-0". Modified table on sheet 4.

Questions regarding the Highway Standards should be directed to the Policy and Procedures Section in the Bureau of Design and Environment at 217-524-9311.

Sincerely,

Charles J. Ingersoll
Engineer of Design and Environment

January 1, 2010

Illinois Department of Transportation

Standards by Division

DIVISION 200 EARTHWORK, LANDSCAPING, and EROSION CONTROL

STD. NO.	TITLE
EARTHWORK	
202001-01	Earth Median Ditch Check
EROSION CONTROL	
280001-05	Temporary Erosion Control Systems
285001-02	Fabric Formed Concrete Revetment Mats

January 1, 2010

Illinois Department of Transportation

Standards by Division

DIVISION 300 SUBGRADES, SUBBASES, and BASE COURSES

STD. NO.	TITLE
BASE COURSE	
353001-04	PCC Base Course with HMA Binder and Surface Courses

January 1, 2010

Illinois Department of Transportation

Standards by Division

DIVISION 400 SURFACE COURSES, PAVEMENTS, REHABILITATION, AND SHOULDERS

STD. NO.	TITLE
BITUMINOUS SURFACES AND HOT-MIX ASPHALT PAVEMENTS	
406001-05	Entrance Ramp Terminal (Flexible Ramp Pavement Adjacent to Flexible Mainline Pavement)
406101-04	Exit Ramp Terminal (Flexible Ramp Pavement Adjacent to Flexible Mainline Pavement)
406201-01	Mailbox Turnout
PORTLAND CEMENT CONCRETE PAVEMENTS AND SIDEWALKS	
420001-07	Pavement Joints
420101-04	24’ (7.2 m) Jointed PCC Pavement
420106-04	36’ (10.8 m) Jointed PCC Pavement
420111-02	PCC Pavement Roundouts
420201-07	Entrance Ramp Terminal (Jointed PCC Ramp Pavement Adjacent to Jointed PCC Mainline Pavt.)
420206-08	Entrance Ramp Terminal (Jointed PCC Ramp Pavement Adjacent to CRC Mainline Pavement)
420301-04	Exit Ramp Terminal (Jointed PCC Ramp Pavement Adjacent to Jointed PCC Mainline Pavt.)
420306-06	Exit Ramp Terminal (Jointed PCC Ramp Pavement Adjacent to CRC Mainline Pavement)
420401-08	Bridge Approach Pavement Connector
420501-04	PCC Pavement and PCC Base Course Adjacent to Railroad Grade Crossing
420601-05	24’ (7.2 m) PCC Pavement
420701-02	Pavement Fabric
421001-02	Bar Reinforcement for CRC Pavement
421101-07	24’ (7.2 m) CRC Pavement (With Wide Flange Beam Terminal Joint)
421106-07	36’ (10.8 m) CRC Pavement (With Wide Flange Beam Terminal Joint)
421201-06	24’ (7.2 m) CRC Pavement (With Lug System)
421206-06	36’ (10.8 m) CRC Pavement (With Lug System)
424001-05	Curb Ramps for Sidewalks
PAVEMENT REHABILITATION	
442001-04	Class A Patches
442101-07	Class B Patches
442201-03	Class C and D Patches
SHOULDERS	
482001-02	HMA Shoulder Adjacent to Flexible Pavement
482006-03	HMA Shoulder Adjacent to Rigid Pavement
482011-03	HMA Shoulder Strips/Shoulders With Resurfacing or Widening and Resurfacing Projects
483001-04	PCC Shoulder

January 1, 2010

Illinois Department of Transportation

Standards by Division

DIVISION 500 BRIDGES and CULVERTS

STD. NO.	TITLE
BRIDGES	
509001-01	Tubular Thrie Beam Retrofit Rail for Bridges
515001-03	Name Plate for Bridges
CULVERTS	
542001-02	Reinforced Concrete End Sections With Parallel Wingwalls for Pipe Culverts 300 mm (12") thru 1200 mm (48") Diameter at Right Angles With Roadway
542101-02	Reinforced Concrete End Sections for Pipe Culverts 375 mm (15") thru 900 mm (36") Diameter at Right Angles With Roadway
542106-02	Reinforced Concrete End Sections for Pipe Culverts, 1050 mm (42") thru 1500 mm (60") Diameter at Right Angles With Roadway
542111-02	Reinforced Concrete End Sections for Pipe Culverts, 1650 mm (66") thru 2100 mm (84") Diameter at Right Angles With Roadway
542116-02	Reinforced Concrete End Sections for Multiple (2 & 3) Pipe Culverts, 375 mm (15") thru 900 mm (36") at Right Angles With Roadway
542121-02	Reinforced Concrete End Sections for Multiple (2 & 3) Pipe Culverts, 1050 mm (42") thru 1500 mm (60") Diameter at Right Angles With Roadway
542201-02	Reinforced Concrete End Sections for Pipe Culverts, 375 mm (15") thru 900 mm (36") Diameter Skewed With Roadway
542206-01	Reinforced Concrete End Sections for Pipe Culverts, 1050 mm (42") thru 1500 mm (60") Diameter Skewed With Roadway
542301-02	Precast Reinforced Concrete Flared End Section
542306-02	Precast Reinforced Concrete Elliptical Flared End Section
542311-01	Grating for Concrete Flared End Section (For 600 mm (24") thru 1300 mm (54") Pipe)
542401-01	Metal End Section for Pipe Culverts
542406-01	Metal End Section for Pipe Arches
542501-02	Inlet Box Type 600 (24) A
542506-02	Inlet Box Type 600 (24) B
542511-02	Inlet Box Type 600 (24) C
542516-02	Inlet Box Type 600 (24) D
542521-02	Inlet Box Type 600 (24) E
542526-02	Inlet Box Type F, 600 mm (24”)
542531-03	Inlet Box Type G, 600 mm (24”)
542536-03	Inlet Box Type 900 (36) A
542541-02	Inlet Box Type 1200 (48) A
542546-01	Flush Inlet Box for Median
542601-02	Reinforced Concrete Pipe Elbow
542606-01	Reinforced Concrete Pipe Tee

January 1, 2010

Illinois Department of Transportation

Standards by Division

DIVISION 600 INCIDENTAL CONSTRUCTION

STD. NO.	TITLE
DRAINAGE RELATED ITEMS	
601001-03	Sub-Surface Drains
601101-01	Concrete Headwall for Pipe Drain
602001-01	Catch Basin, Type A
602006-02	Catch Basin, Type B
602011-01	Catch Basin, Type C
602016-01	Catch Basin, Type D
602101-02	Drainage Structures, Types 1, 2 & 3
602106-01	Drainage Structures, Types 4, 5 & 6
602301-02	Inlet, Type A
602306-02	Inlet, Type B
602401-02	Manhole, Type A
602406-03	Manhole, Type A, 1.8 m (6’) Diameter
602411-01	Manhole, Type A, 2.1 m (7’) Diameter
602416-01	Manhole, Type A, 2.4 m (8’) Diameter
602421-01	Manhole, Type A, 2.7 m (9’) Diameter
602501-01	Valve Vault, Type A
602601-02	Precast Reinforced Concrete Flat Slab Top
602701-02	Manhole Steps
604001-03	Frame and Lids, Type 1
604006-04	Frame and Grate, Type 3
604011-04	Frame and Grate, Type 3V
604016-02	Frame and Grate, Type 4
604021-02	Base, Frame and Lids, Type 5
604026-02	Frame and Grate, Type 6
604031-02	Grate, Type 7
604036-02	Grate, Type 8
604041-02	Frame and Grate, Type 9
604046-02	Frame and Grate, Type 10
604051-03	Frame and Grate, Type 11
604056-03	Frame and Grate, Type 11V
604061-02	Frame and Grate, Type 12
604066-02	Frame and Lid, Type 15
604071-04	Frame and Grate, Type 20
604076-04	Frame and Grate, Type 21
604081-04	Frames and Grates, Type 22
604086-02	Frame and Grate, Type 23
604091-02	Frame and Grate, Type 24
604101-01	Median Inlet for 600 mm (24") Reinforced Concrete Pipe

604106-01	Median Inlet for 900 mm (36") Reinforced Concrete Pipe
606001-04	Concrete Curb Type B and Combination Concrete Curb and Gutter
606006-02	Outlet for Concrete Curb and Gutter, Type B-15.60 (B-6.24)
606101-04	Type A Gutter (Inlet, Outlet, and Entrance)
606106-04	Outlet, Type l for Type A Gutter
606111-03	Outlets, Type 2 for Type A Gutter
606201-02	Type B Gutter (Inlet, Outlet, and Entrance)
606206-03	Outlet, Type 1 for Type B Gutter
606211-03	Outlets, Type 2 for Type B Gutter
606301-04	PC Concrete Islands And Medians
606306-03	Corrugated PC Concrete Medians
606401-01	Paved Ditch
609001-05	Bridge Approach Shoulder Pavement and Drain
609006-05	Bridge Approach Pavement (Drain Detail)
610001-05	Shoulder Inlet With Curb

SAFETY RELATED ITEMS

630001-08	Steel Plate Beam Guardrail
630101-08	Guardrail Mounted on Existing Culverts
630201-06	PCC/HMA Stabilization at Steel Plate Beam Guardrail
630301-05	Shoulder Widening for Type 1 (Special) Guardrail Terminals
631006-07	Traffic Barrier Terminal, Type 1B
631011-06	Traffic Barrier Terminal, Type 2
631026-05	Traffic Barrier Terminal, Type 5
631031-08	Traffic Barrier Terminal, Type 6
631032-05	Traffic Barrier Terminal, Type 6A
631033-03	Traffic Barrier Terminal, Type 6B
631036-05	Traffic Barrier Terminal, Type 8
631041-02	Traffic Barrier Terminal, Type 9
631046-04	Traffic Barrier Terminal, Type 10
631051-02	Traffic Barrier Terminal, Type 11
631056-02	Traffic Barrier Terminal, Type 12
635001-01	Delineators
635006-03	Reflector and Terminal Marker Placement
635011-02	Reflector Marker and Mounting Details
636001-02	Cable Road Guard Single Strand
637001-04	Concrete Barrier 815 mm (32 in.) Height
637006-02	Concrete Barrier 1065 mm (42 in.) Height
638001-02	Glare Screen Blades
638101-02	Concrete Glare Screen
639001-02	Sight Screen Precast Prestressed Concrete Panel Wall
640001-01	Sight Screen Chain Link Fence
641001-01	Sight Screen Cedar Stockade Fence Type S
641006-01	Sight Screen Wood Plank Fence Type P
642001-01	Shoulder Rumble Strips

OTHER ITEMS

664001-02	Chain Link Fence
665001-02	Woven Wire Fence
666001-01	Right-of-Way Markers
667001-01	Drainage Markers

667101-01	Permanent Survey Markers
668001-01	U.S. Geological Survey and National Geodetic Survey Benchmarks, Resetting Method

January 1, 2010

Illinois Department of Transportation

Standards by Division

DIVISION 700 WORK ZONE TRAFFIC CONTROL AND PROTECTION, SIGNING, AND PAVEMENT MARKING

STD. NO.	TITLE
WORK ZONE TRAFFIC CONTROL AND PROTECTION	
701001-02	Off-Road Operations, 2L, 2W, More Than 4.5 m (15') Away
701006-03	Off-Road Operations, 2L, 2W, 4.5 m (15') to 600 mm (24”) From Pavement Edge
701011-02	Off-Road Moving Operations, 2L, 2W, Day Only
701101-02	Off-Road Operations, Multilane, 4.5 m (15') to 600 mm (24”) From Pavement Edge
701106-02	Off-Road Operations, Multilane, More Than 4.5 m (15') Away
701201-03	Lane Closure, 2L, 2W, Day Only, for Speeds ≥ 45 MPH
701206-02	Lane Closure, 2L, 2W, Night Only, for Speeds ≥ 45 MPH
701301-03	Lane Closure, 2L, 2W, Short Time Operations
701306-02	Lane Closure, 2L, 2W, Slow Moving Operations Day Only, for Speeds ≥ 45 MPH
701311-03	Lane Closure, 2L, 2W, Moving Operations - Day Only
701316-04	Lane Closure, 2L, 2W, Bridge Repair, for Speeds ≥ 45 MPH
701321-10	Lane Closure, 2L, 2W, Bridge Repair with Barrier
701326-03	Lane Closure, 2L, 2W, Pavement Widening, for Speeds ≥ 45 MPH
701331-03	Lane Closure, 2L, 2W, With Run-Around, for Speeds ≥ 45 MPH
701336-05	Lane Closure, 2L, 2W, Work Areas in Series, for Speeds ≥ 45 MPH
701400-04	Approach to Lane Closure, Freeway/Expressway
701401-05	Lane Closure, Freeway/Expressway
701402-07	Lane Closure, Freeway/Expressway, with Barrier
701406-05	Lane Closure, Freeway/Expressway, Day Operations Only
701411-06	Lane Closure, Multilane, at Entrance or Exit Ramp, for Speeds ≥ 45 MPH
701416-06	Lane Closure, Freeway/Expressway, with Crossover and Barrier
701421-02	Lane Closure, Multilane, Day Operations Only, for Speeds ≥ 45 MPH to 55 MPH
701422-02	Lane Closure, Multilane, for Speeds ≥ 45 MPH to 55 MPH
701423-03	Lane Closure, Multilane, with Barrier, for Speeds ≥ 45 MPH to 55 MPH
701426-03	Lane Closure, Multilane, Intermittent or Moving Operation, for Speeds ≥ 45 MPH
701431-05	Lane Closure, Multilane, Undivided with Crossover, for Speeds ≥ 45 MPH to 55 MPH
701446-01	Two Lane Closure, Freeway/Expressway
701451-01	Ramp Closure Freeway/Expressway
701456	Partial Exit Ramp Closure Freeway/Expressway
701501-05	Urban Lane Closure, 2L, 2W, Undivided
701502-03	Urban Lane Closure, 2L, 2W, with Bidirectional Left Turn Lane
701601-06	Urban Lane Closure, Multilane, 1W or 2W with Nontraversable Median
701602-04	Urban Lane Closure, Multilane, 2W with Bidirectional Left Turn Lane
701606-06	Urban Lane Closure, Multilane, 2W with Mountable Median
701701-06	Urban Lane Closure, Multilane Intersection
701801-04	Lane Closure, Multilane 1W or 2W Crosswalk or Sidewalk Closure
701901-01	Traffic Control Devices

704001-06	Temporary Concrete Barrier

SIGNING

720001-01	Sign Panel Mounting Details
720006-02	Sign Panel Erection Details
720011-01	Metal Posts for Signs, Markers and Delineators
720016-02	Mast Arm Mounted Street Name Signs
720021-02	Sign Panels, Extruded Aluminum Type
728001-01	Telescoping Steel Sign Support
729001-01	Applications of Types A and B Metal Posts (For Signs & Markers)
731001-01	Base for Telescoping Steel Sign Support

PAVEMENT MARKING

780001-02	Typical Pavement Markings
781001-03	Typical Applications Raised Reflective Pavement Markers

January 1, 2010

Illinois Department of Transportation

Standards by Division

DIVISION 800 ELECTRICAL

STD. NO.	TITLE
GENERAL ELECTRICAL REQUIREMENTS	
805001-01	Electrical Service Installation Details
WIREWAY AND CONDUIT SYSTEMS	
814001-02	Handholes
814006-02	Double Handholes
LIGHTING – CONTROLLERS	
825001	Lighting Controller, 240V, Pole Mounted
825006	Lighting Controller, 480V, Pole Mounted
825011	Lighting Controller, 240V, Pedestal Mounted
825016	Lighting Controller, 480V, Pedestal Mounted
825021	Lighting Controller, 240V, Base Mounted
825026	Lighting Controller, 480V, Base Mounted
LIGHTING – FOUNDATIONS	
836001	Light Pole Foundation
837001	Light Tower Foundation
TRAFFIC SIGNALS - CONTROLLERS AND EQUIPMENT	
857001-01	Standard Phase Designation Diagrams and Phase Sequences
857006-01	Supervised Railroad Interconnect Circuit
862001-01	Uninterruptable Power Supply (UPS)
TRAFFIC SIGNALS - WIRE AND CABLE	
873001-02	Traffic Signal Grounding & Bonding
TRAFFIC SIGNALS - POSTS AND FOUNDATIONS	
876001-01	Pedestrian Push Button Post
877001-04	Steel Mast Arm Assembly and Pole 16’ Through 55’
877002-01	Steel Mast Arm Assembly and Pole 56’ Through 75’
877006-03	Steel Mast Arm Assembly and Pole with Dual Mast Arms
877011-04	Steel Combination Mast Arm Assembly and Pole 16’ Through 55’
877012-01	Steel Combination Mast Arm Assembly and Pole 56’ Through 75’
878001-08	Concrete Foundation Details
TRAFFIC SIGNALS - SIGNAL HEADS	
880001-01	Span Wire Mounted Signals and Flashing Beacon Installation
880006-1	Traffic Signal Mounting Details

TRAFFIC SIGNALS - DETECTION

886001-01	Detector Loop Installations
886006-01	Typical Layout for Detection Loops

January 1, 2010

Illinois Department of Transportation

Standards by Division

DIVISION 000 MISCELLANEOUS TABLES

STD. NO.	TITLE
000001-05	Standard Symbols, Abbreviations and Patterns
001001-02	Areas of Reinforcement Bars
001006	Decimal of an Inch and of a Foot

January 1, 2010

Illinois Department of Transportation

Standards by Division

DIVISION BLR LOCAL ROADS

STD. NO.	TITLE
BLR 10-6	PCC Pavement Special
BLR 14-10	Portland Cement Concrete Pavement (Nonreinforced)
BLR 17-4	Traffic Control Devices - Day Labor Construction
BLR 18-5	Traffic Control Devices - Day Labor Maintenance
BLR 20-6	Traffic Barrier Terminal - Type 5R
BLR 21-8	Typical Application of Traffic Control Devices for Construction on Rural Local Highways
BLR 22-6	Typ. Appl. of T.C.D. for Rural Loc. Hwys. (2-Lane 2 Way Rural Traff.) (Rd. Closed to Thru Traff.)
BLR 23-3	Traffic Barrier Terminal Type 1
BLR 24-2	Mailbox Turnout for Local Roads
BLR 25-1	Type 1A Barricade for Non-NHS Routes
BLR 26-2	Steel Plate Beam Guardrail 700 mm (27 ½”) Height
BLR 27-1	Traffic Barrier Terminal Type 5A

Illinois Department of Transportation

Standards by Subject/Title **January 1, 2010**

SUBJECT/TITLE	STD. NO.
A	
Abbreviations, Symbols and Patterns	000001
B	
Barricade, Type 1A for Non-NHS Routes	BLR 25
Barrier, Concrete, 815 mm (32 in.) Height	637001
Barrier, Concrete, 1065 mm (42 in.) Height	637006
Barrier, Concrete, Temporary	704001
Base Course, PCC with HMA Binder and Surface Courses	353001
Benchmarks, Method of Resetting	668001
C	
Cable, Road Guard, Single Strand	636001
Catch Basin, Type A	602001
Catch Basin, Type B	602006
Catch Basin, Type C	602011
Catch Basin, Type D	602016
Circuit, Supervised Railroad Interconnect	857006
Curb Type B and Combination Curb and Gutter, Concrete	606001
Curb Ramps for Sidewalk	424001
D	
Decimal Equivalents of an Inch and Foot	001006
Delineators	635001
Detection Loops, Typical Layout	886006
Detector Loop Installations	886001
Ditch, Paved	606401
Ditch Check, Earth Median	202001
Drainage Structures, Type 1, 2 and 3	602101
Drainage Structures, Type 4, 5 and 6	602106
Drains, Sub-Surface	601001
E	
Elbow, Concrete Pipe	542601
Electrical Service Installation Details	805001
End Section, Flared, Precast Reinforced Concrete, Elliptical	542306
End Section, Flared, Precast Reinforced Concrete, Round	542301
End Section, Metal, for Pipe Arch	542406
End Section, Metal, for Pipe Culvert	542401
End Sections, Reinforced Concrete:	
Right Angle, 2 & 3 Pipe, for 375 mm (15") thru 900 mm (36") Diameter	542116
Right Angle, 2 & 3 Pipe, for 1050 mm (42") thru 1500 (60") Diameter	542121

Right Angle, for 375 mm (15") thru 900 mm (36") Diameter 542101
Right Angle, for 1050 mm (42") thru 1500 (60") Diameter 542106
Right Angle, for 1675 mm (66") thru 2125 (84") Diameter 542111
Right Angle, Parallel Wingwalls, for 300 mm (l2") thru 1200 mm (48") Diameter 542001
Skewed,.for 375 mm (l5") thru 900 mm (36") Diameter 542201
Skewed, for 1050 mm (42") thru 1500 mm (60") Diameter 542206
Erosion Control Systems, Temporary 280001

F

Fence, Chain Link 664001
Fence, Woven Wire 665001
Flashing Beacon Installation 880001
Flat Slab Top, Precast Reinforced Concrete 602601
Foundations, Details, Concrete 878001
Frames, Grates and Lids:
Type 1 Frame and Lids 604001
Type 3 Frame and Grate 604006
Type 3V Frame and Grate 604011
Type 4 Frame and Grate 604016
Type 5 Base, Frame and Lids 604021
Type 6 Frame and Grate 604026
Type 7 Grate 604031
Type 8 Grate 604036
Type 9 Frame and Grate 604041
Type 10 Frame and Grate 604046
Type 11 Frame and Grate 604051
Type 11V Frame and Grate 604056
Type 12 Frame and Grate 604061
Type 15 Frame and Lid 604066
Type 20 Frame and Grate 604071
Type 21 Frame and Grate 604076
Type 22 Frames and Grates 604081
Type 23 Frame and Grate 604086
Type 24 Frame and Grate 604091

G

Glare Screen, Blades 638001
Glare Screen, Concrete 638101
Grating for Concrete Flared End Section, for 600 (24") thru 1300 (54") Pipe Dia. 542311
Guardrail:
Mounted on Existing Culverts 630101
Steel Plate Beam, ... 630001
Steel Plate Beam, 700 mm (27 ½") Height ..... BLR 26
Steel Plate Beam, PCC/HMA Stabilization 630201
Tubular Thrie Beam Retrofit Rail for Bridges 509001

H

Handholes, Concrete and Polymer Concrete, Double 814006
Handholes, Polymer Concrete, Single 814001
Headwall for Pipe Drain, Concrete 601101

I

Inlet:
For 600 mm (24") Reinforced Concrete Pipe in Median 604101
For 900 mm (36") Reinforced Concrete Pipe in Median 604106
For Shoulder With Curb 610001
For Type B Gutter 606201
Outlet & Entrance for Type A Gutter 606101
Type A 602301
Type B 602306
Inlet Box:
Flush for Median 542546
Type 600 (24) A 542501
Type 600 (24) B 542506
Type 600 (24) C 542511
Type 600 (24) D 542516
Type 600 (24) E 542521
Type 600 (24) F 542526
Type 600 (24) G 542531
Type 900 (36) A 542536
Type 1200 (48) A 542541
Islands, Concrete 606301

J/K

Joints, Pavement 420001

L

Lane Closure ..... (see Traffic Control and Protection)
Lighting Controller, 240V, Pole Mounted 825001
Lighting Controller, 480V, Pole Mounted 825006
Lighting Controller, 240V, Pedestal Mounted 825011
Lighting Controller, 480V, Pedestal Mounted 825016
Lighting Controller, 240V, Base Mounted 825021
Lighting Controller, 480V, Base Mounted 825026
Light Pole Foundation 836001
Light Tower Foundation 837001

M

Mailbox Turnout, Local System BLR-24
Mailbox Turnout, State System 406201
Manhole, Type A 602401
Manhole, Type A, 1.8 m (6’) Diameter 602406
Manhole, Type A, 2.1 m (7’) Diameter 602411
Manhole, Type A, 2.4 m (8’) Diameter 602416
Manhole, Type A, 2.7 m (9’) Diameter 602421
Manhole Steps 602701
Markers:
Drainage 667001
Permanent Survey 667101
Right-of-Way 666001
Mast Arm Assembly and Pole 16’ Through 55’, Steel Combination 877011

Mast Arm Assembly and Pole 56’ Through 75’, Steel Combination....877012
Mast Arm Assembly and Pole, Steel, Dual Mast Arms....877006
Mast Arm Assembly and Pole 16’ Through 55’, Steel....877001
Mast Arm Assembly and Pole 56’ Through 75’, Steel....877002
Mast Arm Mounted Street Name Signs....720016
Median, Concrete....606301
Median, Concrete, Corrugated....606306

N

Name Plates for Bridges....515001

O

Outlet:
- Inlet and entrance for Type A Gutter....606101
- Type 1, for Type A Gutter....606106
- Type 1, for Type B Gutter....606206
- Type 2, for Type A Gutter....606111
- Type 2, for Type B Gutter....606211
- Type B-15.60 (B-6.24) for Concrete Curb and Gutter....606006
- For Type B Gutter, Standard....606201

P/Q

Patching, Class A....442001
Patching, Class B....442101
Patching, Class C and D....442201
Pavement:
- 24' (7.2 m) Continuously Reinforced PCC With Lug System....421201
- 24' (7.2 m) Continuously Reinforced PCC With Wide Flange Beam Term. Joint....421101
- 24' (7.2 m) Jointed PCC....420101
- 24' (7.2 m) PCC....420601
- 36' (10.8 m) Continuously Reinf. PCC With Wide Flange Beam Term. Joint....421106
- 36' (10.8 m) Continuously Reinforced PCC With Lug System....421206
- 36' (10.8 m) Jointed PCC....420106
- Adjacent to Railroad Grade Crossing, PCC....420501
- Bridge Approach, Connector....420401
- Bridge Approach (Drain Detail)....609006
- Fabric....420701
- Nonreinforced PCC....BLR 14
- Reinforcement for Continuously Reinforced PCC Pavement....421001
- Roundouts, PCC....420111
- Special, PCC....BLR 10

Pavement Markers, Raised Reflective, Applications....781001
Pavement Markings....780001
Phase Sequences....857001
Posts, Metal, Applications for Type A and B....729001
Posts, Metal, for Signs, Markers and Delineators....720011
Push Button Post....876001

R

Ramp Closure, Freeway/Expressway....701451

Ramp Closure, Partial Exit, Freeway/Expressway 701456
Ramp Terminal:
Entrance, Flexible Adjacent to Flexible Mainline Pavement 406001
Entrance, Jointed PCC Adjacent to CRC Mainline Pavement 420206
Entrance, Jointed PCC Adjacent to Jointed PCC Mainline Pavement 420201
Exit, Flexible Adjacent to Flexible Mainline Pavement 406101
Exit, Jointed PCC Adjacent to CRC Mainline Pavement 420306
Exit, Jointed PCC Adjacent to Jointed PCC Mainline Pavement 420301
Reflector and Terminal Marker Placement 635006
Reflector Marker and Mounting Details 635011
Reinforcement Bars, Areas, Weights and Spacing 001001
Revetment Mat, Fabric Formed Concrete 285001
Rumble Strips, Shoulder 642001

S

Shoulder:
Adjacent to Flexible Pavement, HMA 482001
Adjacent to Rigid Pavement, HMA 482006
Bridge Approach Shoulder Pavement and Drain 609001
PCC 483001
or Shoulder Strips With Resurfacing or Widening and Resurfacing Projects 482011
Sidewalk, Curb Ramps for 424001
Sight Screen, Chain Link Fence 640001
Sight Screen, Concrete Panel Wall, Precast Prestressed 639001
Sight Screen, Wood Fence, Cedar Stockade 641001
Sight Screen, Wood Fence, Wood Plank 641006
Sign Panel, Erection Details 720006
Sign Panel, Extruded Aluminum Type 720021
Sign Panel, Mounting Details 720001
Sign Support, Telescoping Steel 728001
Sign Support, Telescoping Steel, Base for 731001
Symbols, Abbreviations, and Patterns 000001

T

Tee, Concrete Pipe 542606
Traffic Barrier Terminal:
Type 1 ..... BLR-23
Type 1B 631006
Type 1 Special, Shoulder Widening for 630301
Type 2 631011
Type 5A ..... BLR 27
Type 5R ..... BLR 20
Type 6 631031
Type 6A 631032
Type 6B 631033
Type 8 631036
Type 9 631041
Type 10 631046
Type 11 631051
Type 12 631056

Traffic Control:
Devices 701901
Devices:
Type 1A Barricade for Non-NHS Routes ..... BLR 25
Day Labor Construction ..... BLR 17
Day Labor Maintenance ..... BLR 18
Typical Application of, for Construction on Rural Local Highways ..... BLR 21
Typical Application of, for Construction on Rural Local Highways (Two-Lane Two Way Rural Traffic) (Road Closed to Thru Traffic) ..... BLR 22
Lane Closure, 2L, 2W:
Bridge Repair, for Speeds ≥ 45 MPH 701316
Bridge Repair with Barrier 701321
Day Only, for Speeds ≥ 45 MPH 701201
Moving Operations - Day Only 701311
Night Only, for Speeds ≥ 45 MPH 701206
Pavement Widening, for Speeds ≥ 45 MPH 701326
Short Time Operations 701301
Slow Moving Operations Day Only, for Speeds ≥ 45 MPH 701306
With Run-Around, for Speeds ≥ 45 MPH 701331
Work Areas in Series, for Speeds ≥ 45 MPH 701336
Lane Closure, Freeway/Expressway 701401
Lane Closure, Freeway/Expressway:
Approach to 701400
Day Operations Only 701406
Two Lane Closure 701446
with Barrier 701402
with Crossover and Barrier 701416
Lane Closure, Multilane:
1W Or 2W, Crosswalk or Sidewalk Closure 701801
at Entrance or Exit Ramp, for Speeds ≥ 45 MPH 701411
Day Operations Only, for Speeds ≥ 45 MPH to 55 MPH 701421
for Speeds ≥ 45 MPH to 55 MPH 701422
Intermittent or Moving Operation, for Speeds ≥ 45 MPH 701426
Undivided With Crossover, for Speeds ≥ 45 MPH to 55 MPH 701431
with Barrier, for Speeds ≥ 45 MPH to 55 MPH 701423
Lane Closure, Urban:
2L, 2W, Undivided 701501
2L, 2W, with Bidirectional Left Turn Lane 701502
Multilane, 1W or 2W with Nontraversable Median 701601
Multilane, 2W with Bidirectional Left Turn Lane 701602
Multilane, 2W with Mountable Median 701606
Multilane Intersection 701701
Off-Road Operations:
2L 2W, 4.5 m (15’) to 600 mm (24”) From Pavement Edge 701006
2L 2W, More Than 4.5 m (15’) Away 701001
Moving, 2L 2W, Day Only 701011
Multilane, 4.5 m (15’) to 600 mm (24”) From Pavement Edge 701101
Multilane, More Than 4.5 m (15’) Away 701106
Traffic Signal Grounding & Bonding 873001

Traffic Signal Mounting Details, Post and Bracket Mounted.....880006
Traffic Signal Mounting Details, Span Wire Mounted and Flashing Beacon.....880001

U-Z

Uninterruptable Power Supply (UPS).....862001
Valve Vault, Type A 602501

ABV	ABOVE
A/C	ACCESS CONTROL
AC	ACRE
ADJ	ADJUST
AS	AERIAL SURVEYS
AGG	AGGREGATE
AH	AHEAD
APT	APARTMENT
ASPH	ASPHALT
AUX	AUXILIARY
AGS	AUXILIARY GAS VALVE (SERVICE)
AVE	AVENUE
AX	AXIS OF ROTATION
BK	BACK
B-B	BACK TO BACK
BKPL	BACKPLATE
B	BARN
BARR	BARRICADE
BGN	BEGIN
BM	BENCHMARK
BIND	BINDER
BIT	BITUMINOUS
BTM	BOTTOM
BLVD	BOULEVARD
BRK	BRICK
BBOX	BUFFALO BOX
BLDG	BUILDING
CIP	CAST IRON PIPE
CB	CATCH BASIN
C-C	CENTER TO CENTER
CL	CENTERLINE OR CLEARANCE
CL-E	CENTERLINE TO EDGE
CL-F	CENTERLINE TO FACE
CTS	CENTERS
CERT	CERTIFIED
CHSLD	CHISELED
CS	CITY STREET
CP	CLAY PIPE
CLSD	CLOSED
CLID	CLOSED LID
CT	COAT OR COURT
COMB	COMBINATION
C	COMMERCIAL BUILDING
CE	COMMERCIAL ENTRANCE
CONC	CONCRETE
CONST	CONSTRUCT
CONTD	CONTINUED
CONT	CONTINUOUS
COR	CORNER
CORR	CORRUGATED
CMP	CORRUGATED METAL PIPE
CNTY	COUNTY
CH	COUNTY HIGHWAY
CSE	COURSE
XSECT	CROSS SECTION
m^3	CUBIC METER
mm^3	CUBIC MILLIMETER
CU YD	CUBIC YARD
CULV	CULVERT
C&G	CURB & GUTTER
D	DEGREE OF CURVE
DC	DEPRESSED CURVE
DET	DETECTOR
DIA	DIAMETER
DIST	DISTRICT
DOM	DOMESTIC
DBL	DOUBLE
DSEL	DOWNSTREAM ELEVATION
DSFL	DOWNSTREAM FLOWLINE
DR	DRAINAGE OR DRIVE
DI	DRAINAGE INLET OR DROP INLET
DRV	DRIVEWAY
DCT	DUCT
EA	EACH
EB	EASTBOUND
EOP	EDGE OF PAVEMENT
E-CL	EDGE TO CENTERLINE
E-E	EDGE TO EDGE
EL	ELEVATION
ENTR	ENTRANCE
EXC	EXCAVATION
EX	EXISTING
EXPWAY	EXPRESSWAY
E	EXTERNAL DISTANCE OF HORIZONTAL CURVE
E	OFFSET DISTANCE TO VERTICAL CURVE
F-F	FACE TO FACE
FA	FEDERAL AID
FAI	FEDERAL AID INTERSTATE
FAP	FEDERAL AID PRIMARY
FAS	FEDERAL AID SECONDARY
FAUS	FEDERAL AID URBAN SECONDARY
FP	FENCE POST
FE	FIELD ENTRANCE
FH	FIRE HYDRANT
FL	FLOW LINE
FB	FOOT BRIDGE
FDN	FOUNDATION
FR	FRAME
F&G	FRAME & GRATE
FRWAY	FREEWAY
GAL	GALLON
GALV	GALVANIZED
G	GARAGE
GM	GAS METER
GV	GAS VALVE
GRAN	GRANULAR
GR	GRATE
GRVL	GRAVEL
GND	GROUND
GUT	GUTTER
GP	GUY POLE
GW	GUY WIRE
HH	HANDHOLE
HATCH	HATCHING
HD	HEAD
HDW	HEADWALL
HDUTY	HEAVY DUTY
ha	HECTARE
HMA	HOT MIX ASPHALT
HWY	HIGHWAY
HORIZ	HORIZONTAL
HSE	HOUSE
IL	ILLINOIS
IMP	IMPROVEMENT
IN DIA	INCH DIAMETER
INL	INLET
INST	INSTALLATION
IDS	INTERSECTION DESIGN STUDY
INV	INVERT
IP	IRON PIPE
IR	IRON ROD
JT	JOINT
kg	KILOGRAM
km	KILOMETER
LS	LANDSCAPING
LN	LANE
LT	LEFT
LP	LIGHT POLE
LGT	LIGHTING
LF	LINEAL FEET OR LINEAR FEET
L	LITER OR CURVE LENGTH
LC	LONG CHORD
LNG	LONGITUDINAL
L SUM	LUMP SUM
MACH	MACHINE
MB	MAIL BOX
MH	MANHOLE
MATL	MATERIAL
MED	MEDIAN
m	METER
METH	METHOD
M	MID-ORDINATE
mm	MILLIMETER
mm DIA	MILLIMETER DIAMETER
MIX	MIXTURE
MBH	MOBILE HOME
MOD	MODIFIED
MFT	MOTOR FUEL TAX
N & BC	NAIL & BOTTLE CAP
N & C	NAIL & CAP
N & W	NAIL & WASHER
NOAA	NATIONAL OCEANIC ATMOSPHERIC ADMINISTRATION
NC	NORMAL CROWN
NB	NORTHBOUND
NE	NORTHEAST
NW	NORTHWEST
OLID	OPEN LID
PAT	PATTERN
PVD	PAVED
PVMT	PAVEMENT
PM	PAVEMENT MARKING
PED	PEDESTAL
PNT	POINT
PC	POINT OF CURVATURE
PI	POINT OF INTERSECTION OF HORIZONTAL CURVE
PRC	POINT OF REVERSE CURVE
PT	POINT OF TANGENCY
POT	POINT ON TANGENT
POLYETH	POLYETHYLENE
PCC	PORTLAND CEMENT CONCRETE
PP	POWER POLE OR PRINCIPAL POINT
PRM	PRIME
PE	PRIVATE ENTRANCE
PROF	PROFILE
PGL	PROFILE GRADELINE
PROJ	PROJECT
P.C.	PROPERTY CORNER
PL	PROPERTY LINE
PR	PROPOSED
R	RADIUS
RR	RAILROAD
RRS	RAILROAD SPIKE
RPS	REFERENCE POINT STAKE
REF	REFLECTIVE
RCCP	REINFORCED CONCRETE CULVERT PIPE
REINF	REINFORCEMENT
REM	REMOVAL
RC	REMOVE CROWN
REP	REPLACEMENT
REST	RESTAURANT
RESURF	RESURFACING
RET	RETAINING
RT	RIGHT
ROW	RIGHT-OF-WAY
RD	ROAD
RDWY	ROADWAY
RTE	ROUTE
SAN	SANITARY
SANS	SANITARY SEWER
SEC	SECTION
SEED	SEEDING
SHAP	SHAPING
S	SHED
SH	SHEET
SHLD	SHOULDER
SW	SIDEWALK OR SOUTHWEST
SIG	SIGNAL
SOD	SODDING
SM	SOLID MEDIAN
SB	SOUTHBOUND
SE	SOUTHEAST
SPL	SPECIAL
SD	SPECIAL DITCH
SQ FT	SQUARE FEET
m^2	SQUARE METER
mm^2	SQUARE MILLIMETER
SQ YD	SQUARE YARD
STB	STABILIZED
STD	STANDARD
SBI	STATE BOND ISSUE
SR	STATE ROUTE
STA	STATION
SPBGR	STEEL PLATE BEAM GUARDRAIL
SS	STORM SEWER
STY	STORY
ST	STREET
STR	STRUCTURE
e	SUPERELEVATION RATE
S.E. RUN.	SUPERELEVATION RUNOFF LENGTH
SURF	SURFACE
SMK	SURVEY MARKER
T	TANGENT DISTANCE
T.R.	TANGENT RUNOUT DISTANCE
TEL	TELEPHONE
TB	TELEPHONE BOX
TP	TELEPHONE POLE
TEMP	TEMPORARY
TBM	TEMPORARY BENCH MARK
TD	TILE DRAIN
TBE	TO BE EXTENDED
TBR	TO BE REMOVED
TBS	TO BE SAVED
TWP	TOWNSHIP
TR	TOWNSHIP ROAD
TS	TRAFFIC SIGNAL
TSCB	TRAFFIC SIGNAL CONTROL BOX
TSC	TRAFFIC SYSTEMS CENTER
TRVS	TRANSVERSE
TRVL	TRAVEL
TRN	TURN
TY	TYPE
T-A	TYPE A
TYP	TYPICAL
UNDGND	UNDERGROUND
USGS	U.S. GEOLOGICAL SURVEY
USEL	UPSTREAM ELEVATION
USFL	UPSTREAM FLOWLINE
UTIL	UTILITY
VBOX	VALVE BOX
VV	VALVE VAULT
VLT	VAULT
VEH	VEHICLE
VP	VENT PIPE
VERT	VERTICAL
VC	VERTICAL CURVE
VPC	VERTICAL POINT OF CURVATURE
VPI	VERTICAL POINT OF INTERSECTION
VPT	VERTICAL POINT OF TANGENCY
WM	WATER METER
WV	WATER VALVE
WMAIN	WATER MAIN
WB	WESTBOUND
WILDFL	WILDFLOWERS
W	WITH
WO	WITHOUT

Illinois Department of Transportation

PASSED January 1, 2008
ENGINEER OF POLICY AND PROCEDURES
APPROVED January 1, 2008
ENGINEER OF DESIGN AND ENVIRONMENT

ISSUED 1-1-97

DATE	REVISIONS
1-1-08	Updated abbreviations and symbols.
1-1-02	Updated abbreviations and symbols.

STANDARD SYMBOLS, ABBREVIATIONS AND PATTERNS

(Sheet 1 of 8)

STANDARD 000001-05

ADJUSTMENT ITEMS

	EX	PR
Structure To Be Adjusted		ADJ
Structure To Be Cleaned		C
Structure To Be Filled		F
Structure To Be Removed		R
Structure To Be Reconstructed		REC
Frame and Grate To Be Adjusted		A
Frame and Lid To Be Adjusted		A
Domestic Service Box To Be Adjusted		A
Valve Vault To Be Adjusted		A
Special Adjustment		SP
Item To Be Abandoned		AB
Item To Be Moved		M
Item To Be Relocated		REL
Pavement Removal and Replacement		

ALIGNMENT ITEMS

	EX	PR
Baseline		
Centerline		
Centerline Break Circle		
Baseline Symbol		
Centerline Symbol		
PI Indicator		
Point Indicator		
Horiz Curve Data	CURVE P.I. STA= Δ= R= T= L= E= e= T.R.= S.E. RUN= P.C. STA= P.T. STA=	CURVE P.I. STA= Δ= R= T= L= E= e= T.R.= S.E. RUN= P.C. STA= P.T. STA=

BOUNDARIES ITEMS

	EX	PR
Dashed Property Line		
Solid Property/Lot Line		
Section/Grant Line		
County/Township Line		
State Line		
Iron Pipe Found		
Iron Pipe Set		
Survey Marker		
Property Line Symbol		
Same Ownership Symbol		
Northwest Quarter Corner		
Section Corner		
Southeast Quarter Corner		

CONTOUR ITEMS

	EX	PR
Approx. Index Line		
Approx. Intermediate Line		
Index Contour		
Intermediate Contour		
Slope Limit Line		

DRAINAGE ITEMS

	EX	PR
Culvert Line		
Ditch Profile Line		
Grading & Shaping Ditches		
Drainage Boundary Line		
Paved Ditch		
Aggregate Ditch		
Flowline		
Ditch Check		
Headwall		
Inlet		
Manhole		
Summit		
Roadway Ditch Flow		
Swale		
Catch Basin		
Culvert End Section		
Water Surface Indicator		
Riprap		

Illinois Department of Transportation

PASSED January 1, 2008
ENGINEER OF POLICY AND PROCEDURES
APPROVED January 1, 2008
ENGINEER OF DESIGN AND ENVIRONMENT

ISSUED 1-1-97

STANDARD SYMBOLS, ABBREVIATIONS AND PATTERNS

(Sheet 2 of 8)

STANDARD 000001-05

EROSION & SEDIMENT CONTROL ITEMS

	EX	PR
Cleaning & Grading Limits		
Dike		
Erosion Control Fence		
Perimeter Erosion Barrier		
Temporary Fence		xxx xxx xxx
Ditch Check Temporary		T
Ditch Check Permanent		
Inlet & Pipe Protection		
Sediment Basin		
Erosion Control Blanket		
Fabric Formed Concrete Revetment Mat		
Turf Reinforcement Mat		
Mulch Temporary		
Mulch Method 1		
Mulch Method 2 Stabilized		
Mulch Method 3 Hydraulic		

EXISTING IMPROVEMENT ITEMS

	EX	PR
Noise Attn./Levee		
Fence		
Base of Levee		
Mailbox		
Pay Telephone		
Advertising Sign		

LANDSCAPING ITEMS

	EX	PR
Contour Mounding Line		
Shrubs		
Mowline		
Perennial Plants		
Seeding Class 2		
Seeding Class 2A		
Seeding Class 3		
Seeding Class 4		
Seeding Class 4 & 5 Combined		
Seeding Class 5		
Seeding Class 7		

EXISTING LANDSCAPING ITEMS (cont.)

	EX	PR
Seedlings Type 1		
Seedlings Type 2		
Sodding		
Mowstake w/Sign		
Tree Trunk Protection		
Evergreen Tree	E	
Shade Tree	E	

LIGHTING

	EX	PR
Duct		
Conduit		
Electrical Aerial Cable	A	A
Electrical Buried Cable	L	L
Controller		
Underpass Luminaire		
Power Pole		
Pull Point	P	P

Illinois Department of Transportation

PASSED January 1, 2008
ENGINEER OF POLICY AND PROCEDURES
APPROVED January 1, 2008
ENGINEER OF DESIGN AND ENVIRONMENT

ISSUED 1-1-97

STANDARD SYMBOLS, ABBREVIATIONS AND PATTERNS

(Sheet 3 of 8)

STANDARD 000001-05

LIGHTING (cont.)

	EX	PR
Handhole		
Heavy Duty Handhole		
Junction Box		
Light Unit Comb.		
Electrical Ground		
Traffic Flow Arrow		
High Mast Pole		
Light Unit-1		

PAVEMENT (MISC.)

	EX	PR
Keyed Long. Joint		
Keyed Long. Joint w/Tie Bars		
Sawed Long. Joint w/Tie Bars		
Bituminous Shoulder		
Bituminous Taper		
Stabilized Driveway		
Widening		

PAVEMENT MARKINGS

	EX	PR
RR Crossing		
Raised Marker Amber 1 Way		
Raised Marker Amber 2 Way		
Raised Marker Crystal 1 Way		
Two Way Turn Left		
Shoulder Diag. Pattern		
Skip-Dash White		
Skip-Dash Yellow		
Stop Line		
Solid Line		
Double Centerline		
Dotted Lines		
CL 2Ln 2Way RRPM 12.2 m (40') o.c.		
CL 2Ln 2Way RRPM 24.4 m (80') o.c.		
CL Multilane Div. RRPM 12.2 m (40') o.c.		
CL Multilane Div. RRPM 24.4 m (80') o.c.		
CL Multilane Div. Dbl. RRPM 24.4 m (80') o.c.		
CL Multilane Undiv.		
Two Way Turn Left Line		

Illinois Department of Transportation

PASSED January 1, 2008
ENGINEER OF POLICY AND PROCEDURES

APPROVED January 1, 2008
ENGINEER OF DESIGN AND ENVIRONMENT

ISSUED 1-1-97

STANDARD SYMBOLS, ABBREVIATIONS AND PATTERNS

(Sheet 4 of 8)

STANDARD 000001-05

PAVEMENT MARKINGS (cont.)

	EX	PR
Urban Combination Left Only		
Urban Combination Right Only		
Urban Left Turn Arrow		
Urban Right Turn Arrow		
Urban Left Turn Only		
Urban Right Turn Only		
Urban Thru Only		
Rural Combination Left Only		
Rural Combination Right Only		
Rural Left Turn Arrow		
Rural Right Turn Arrow		
Rural Left Turn Only		
Rural Right Turn Only		
Rural Thru Only		

RAILROAD ITEMS

	EX	PR
Abandoned Railroad		
Railroad		
Railroad Point		
Control Box		
Crossing Gate		
Flashing Signal		
Railroad Cant. Mast Arm		
Crossbuck		

REMOVAL ITEMS

	EX	PR
Removal Tic		
Bituminous Removal		
Hatch Pattern		

RIGHT OF WAY ITEMS

	EX	PR
Future ROW Corner Monument		
ROW Marker		
ROW Line		
Easement		
Temporary Easement		

Illinois Department of Transportation

PASSED January 1, 2008
ENGINEER OF POLICY AND PROCEDURES
APPROVED January 1, 2008
ENGINEER OF DESIGN AND ENVIRONMENT

ISSUED 1-1-97

STANDARD SYMBOLS, ABBREVIATIONS AND PATTERNS

(Sheet 5 of 8)

STANDARD 000001-05

ROADWAY PLAN ITEMS

	EX	PR
Edge of Pavement		
Bit Shoulders, Medians and C&G Line		
Aggregate Shoulder		
Sidewalks, Driveways		
Guardrail		
Guardrail Post		
Traffic Sign		
Corrugated Median		

ROADWAY PROFILES

	EX	PR
Profile Line		
P.I. Indicator		
Point Indicator		
Earthworks Balance Point		
Begin Point		
Vert. Curve Data	VPI = ELEV = L = E =	VPI = ELEV = L = E =

SIGNING ITEMS

	EX	PR
Cone, Drum or Barricade		
Barricade Type II		

SIGNING ITEMS (cont.)

	EX	PR
Barricade Type III		
Barricade With Edge Line		
Flashing Light Sign		
Panels I		
Panels II		
Sign Flag		
Direction of Traffic		
Detour M4-10L-(0)		DETOUR
Detour M4-10R-(0)		DETOUR
One Way Left R6-1L		ONE WAY
One Way Right R6-1R		ONE WAY
One Way Arrow Lrg. W1-6-(0)		
Two Way Arrow Large W1-7-(0)		
Reverse Left W1-4L		
Reverse Right W1-4R		
Two Way Traffic Sign W6-3		

SIGNING ITEMS (cont.)

	EX	PR
Detour Ahead W20-2(0)		DETOUR AHEAD
Left Lane Closed Ahead W20-5L(0)		LEFT LANE CLOSED AHEAD
Right Lane Closed Ahead W20-5R(0)		RIGHT LANE CLOSED AHEAD
Road Closed Ahead W20-3(0)		ROAD CLOSED AHEAD
Road Construction Ahead W20-1-(0)		ROAD CONSTRUCTION AHEAD
One Lane Road Ahead W20-4		ONE LANE ROAD AHEAD
Transition Left W4-2L		
Transition Right W4-2R		

Illinois Department of Transportation

PASSED January 1, 2008
ENGINEER OF POLICY AND PROCEDURES
APPROVED January 1, 2008
ENGINEER OF DESIGN AND ENVIRONMENT

ISSUED 1-1-97

STANDARD SYMBOLS, ABBREVIATIONS AND PATTERNS

(Sheet 6 of 8)

STANDARD 000001-05

SIGNING ITEMS (cont.)

	EX	PR
Left Turn Lane R3-I100L		LEFT TURN LANE
Keep Left R4-7AL		KEEP LEFT
Keep Left R4-7BL		KEEP LEFT
Keep Right R4-7AR		KEEP RIGHT
Keep Right R4-7BR		KEEP RIGHT
Stop Here On Red R10-6-AL		STOP HERE ON RED
Stop Here On Red R10-6-AR		STOP HERE ON RED
No Left Turn R3-2		
No Right Turn R3-1		
Road Closed R11-2		ROAD CLOSED
Road Closed Thru Traffic R11-2		ROAD CLOSED TO THRU TRAFFIC

TRAFFIC SHEET ITEMS

	EX	PR
Cable Number	2	2
Left Turn Green	G	G
Left Turn Yellow	Y	Y
Signal Backplate		
Signal Section 200 mm (8")		
Signal Section 300 mm (12")		
Walk/Don't Walk Letters	DW W	DW W
Walk/Don't Walk Symbols		

TRAFFIC SIGNAL ITEMS

	EX	PR
Galv. Steel Conduit		
Underground Cable		
Detector Loop Line		
Detector Loop Large		
Detector Loop Small		
Detector Loop Quadrapole		
Detector Raceway	"E"	
Aluminum Mast Arm		
Steel Mast Arm		
Veh. Detector Magnetic		

TRAFFIC SIGNAL ITEMS (cont.)

	EX	PR
Conduit Splice		
Controller		
Gulfbox Junction		
Wood Pole		
Temp. Signal Head		
Handhole		
Heavy Duty Handhole	H	H
Junction Box	J	J
Ped. Pushbutton Detector		
Ped. Signal Head		
Power Pole Service		
Priority Veh. Detector		
Signal Head		
Signal Head w/Backplate		
Signal Post		

UNDERGROUND UTILITY ITEMS

	EX	PR
Cable TV	CTV CTV	CTV CTV
Electric Cable	E E	E E
Fiber Optic	FO FO	FO FO
Gas Pipe	G	G
Oil Pipe	O	O
Pipe Underdrain		

Illinois Department of Transportation

PASSED January 1, 2008
ENGINEER OF POLICY AND PROCEDURES
APPROVED January 1, 2008
ENGINEER OF DESIGN AND ENVIRONMENT

ISSUED 1-1-97

STANDARD SYMBOLS, ABBREVIATIONS AND PATTERNS

(Sheet 7 of 8)

STANDARD 000001-05

UNDERGROUND UTILITY ITEMS (cont.)

	EX	PR
Sanitary Sewer		
Storm Sewer		
Telephone Cable		
Water Pipe		

UTILITIES ITEMS

	EX	PR
Controller		
Double Handhole		
Fire Hydrant		
Handhole		
Heavy Duty Handhole		
Junction Box		
Light Pole		
Manhole		
Power Pole		
Splice Box Above Ground		
Telephone Splice Box Above Ground		
Telephone Pole		
Traffic Signal		
Water Meter Valve Box		

VEGETATION ITEMS

	EX	PR
Deciduous Tree		
Bush		
Evergreen Tree		
Stump		
Vegetation Line		
Woods & Bush Line		

WATER FEATURE ITEMS

	EX	PR
Stream or Drainage Ditch		
Waters Edge		
Water Surface Indicator		
Water Point		
Disappearing Ditch		
Marsh		

Illinois Department of Transportation

PASSED January 1, 2008

ENGINEER OF POLICY AND PROCEDURES

APPROVED January 1, 2008

ENGINEER OF DESIGN AND ENVIRONMENT

ISSUED 1-1-97

STANDARD SYMBOLS, ABBREVIATIONS AND PATTERNS

(Sheet 8 of 8)

STANDARD 000001-05

REINFORCEMENT BARS - ENGLISH (METRIC)

Bar Size English (metric)	Dia. in. mm	Cross-Sectional Area sq. in. (sq. mm)	Weight lbs./ft. kg/m	SPACING, in. (mm)													
				4 (100)	4½ (115)	5 (125)	140 (5½)	6 (150)	6½ (165)	7 (175)	7½ (190)	8 (200)	8½ (215)	9 (225)	10 (250)	11 (275)	12 (300)
				AREA OF STEEL PER FOOT (METER), sq. in. (sq. mm)													
3 (10)	0.375 (9.5)	0.110 (71)	0.376 (0.560)	0.330 (710)	0.293 (617)	0.264 (568)	0.240 (507)	0.220 (473)	0.203 (430)	0.189 (406)	0.176 (374)	0.165 (355)	0.155 (330)	0.147 (316)	0.132 (284)	0.120 (258)	0.110 (237)
4 (13)	0.500 (12.7)	0.196 (129)	0.668 (0.944)	0.588 (1290)	0.523 (1122)	0.470 (1032)	0.428 (921)	0.392 (860)	0.362 (782)	0.336 (737)	0.314 (679)	0.294 (645)	0.277 (600)	0.261 (573)	0.235 (516)	0.214 (469)	0.196 (430)
5 (16)	0.625 (15.9)	0.307 (199)	1.043 (1.552)	0.921 (1990)	0.819 (1730)	0.737 (1592)	0.670 (1421)	0.614 (1327)	0.567 (1206)	0.526 (1137)	0.491 (1047)	0.461 (995)	0.433 (926)	0.409 (884)	0.368 (796)	0.335 (724)	0.307 (663)
6 (19)	0.750 (19.1)	0.442 (284)	1.502 (2.235)	1.326 (2840)	1.179 (2470	1.061 (2272)	0.964 (2029)	0.884 (1893)	0.816 (1721)	0.758 (1623)	0.707 (1495)	0.663 (1420)	0.624 (1321)	0.589 (1262)	0.530 (1136)	0.482 (1033)	0.442 (947)
7 (22)	0.875 (22.2)	0.601 (387)	2.044 (3.042)	1.803 (3870)	1.603 (3365)	1.442 (3096)	1.311 (2764)	1.202 (2580)	1.110 (2345)	1.030 (2211)	0.962 (2037)	0.902 (1935)	0.848 (1800)	0.801 (1720)	0.721 (1548)	0.656 (1407)	0.601 (1290)
8 (25)	1.000 (25.4)	0.785 (510)	2.670 (3.973)	2.355 (5100)	2.093 (4435)	1.884 (4080)	1.713 (3543)	1.570 (3400)	1.449 (3091)	1.346 (2914)	1.256 (2684)	1.178 (2550)	1.108 (2372)	1.047 (2267)	0.942 (2040)	0.856 (1855)	0.785 (1700)
9 (29)	1.128 (28.7)	1.000 (645)	3.400 (5.060)	3.000 (6450)	2.667 (5609)	2.400 (5160)	2.182 (4607)	2.000 (4300)	1.846 (3909)	1.714 (3686)	1.600 (3395)	1.500 (3225)	1.412 (3000)	1.333 (2867)	1.200 (2580)	1.091 (2345)	1.000 (2150)
10 (32)	1.270 (32.3)	1.267 (819)	4.303 (6.404)	3.801 (8190)	3.379 (7122)	3.041 (6552)	2.764 (5850)	2.534 (5460)	2.339 (4964)	2.172 (4680)	2.027 (4311)	1.901 (4095)	1.789 (3809)	1.689 (3640)	1.520 (3276)	1.382 (2978)	1.267 (2730)
11 (36)	1.410 (35.8)	1.561 (1006)	5.313 (7.907)	4.683 (10060)	4.163 (8748)	3.746 (8048)	3.406 (7186)	3.122 (6707)	2.882 (6097)	2.676 (5749)	2.498 (5295)	2.342 (5030)	2.204 (4679)	2.081 (4471)	1.873 (4024)	1.703 (3658)	1.561 (3353)

Illinois Department of Transportation

PASSED January 1, 2009
ENGINEER OF POLICY AND PROCEDURES
APPROVED January 1, 2009
ENGINEER OF DESIGN AND ENVIRONMENT

ISSUED 1-1-97

DATE	REVISIONS
1-1-09	Switched units to English (metric).
1-1-07	Deleted metric table. Soft converted English table.

AREAS OF REINFORCEMENT BARS

STANDARD 001001-02

DECIMAL OF AN INCH AND OF A FOOT

A		B
	0.0052	1/16
	0.0104	1/8
1/64	0.015625	3/16
	0.0208	1/4
	0.0260	5/16
1/32	0.03125	3/8
	0.0365	7/16
	0.0417	1/2
3/64	0.046875	9/16
	0.0521	5/8
	0.0573	11/16
1/16	0.0625	3/4
	0.0677	13/16
	0.0729	7/8
5/64	0.078125	15/16
	0.0833	1
	0.0885	1 1/16
3/32	0.09375	1 1/8
	0.0990	1 3/16
	0.1042	1 1/4
7/64	0.109375	1 5/16
	0.1146	1 3/8
	0.1198	1 7/16
1/8	0.1250	1 1/2
	0.1302	1 9/16
	0.1354	1 5/8
9/64	0.140625	1 11/16
	0.1458	1 3/4
	0.1510	1 13/16
5/32	0.15625	1 7/8
	0.1615	1 15/16
	0.1667	2

A		B
11/64	0.171875	2 1/16
	0.1771	2 1/8
	0.1823	2 3/16
3/16	0.1875	2 1/4
	0.1927	2 5/16
	0.1979	2 3/8
13/64	0.203125	2 7/16
	0.2083	2 1/2
	0.2135	2 9/16
7/32	0.21875	2 5/8
	0.2240	2 11/16
	0.2292	2 3/4
15/64	0.234375	2 13/16
	0.2396	2 7/8
	0.2448	2 15/16
1/4	0.2500	3
	0.2552	3 1/16
	0.2604	3 1/8
17/64	0.265625	3 3/16
	0.2708	3 1/4
	0.2760	3 5/16
9/32	0.28125	3 3/8
	0.2865	3 7/16
	0.2917	3 1/2
19/64	0.296875	3 9/16
	0.3021	3 5/8
	0.3073	3 11/16
5/16	0.3125	3 3/4
	0.3177	3 13/16
	0.3229	3 7/8
21/64	0.328125	3 15/16
	0.3333	4

A		B
	0.3385	4 1/16
11/32	0.34375	4 1/8
	0.3490	4 3/16
	0.3542	4 1/4
23/64	0.359375	4 5/16
	0.3646	4 3/8
	0.3698	4 7/16
3/8	0.3750	4 1/2
	0.3802	4 9/16
	0.3854	4 5/8
25/64	0.390625	4 11/16
	0.3958	4 3/4
	0.4010	4 13/16
13/32	0.40625	4 7/8
	0.4115	4 15/16
	0.4167	5
27/64	0.421875	5 1/16
	0.4271	5 1/8
	0.4323	5 3/16
7/16	0.4375	5 1/4
	0.4427	5 5/16
	0.4479	5 3/8
29/64	0.453125	5 7/16
	0.4583	5 1/2
	0.4635	5 9/16
15/32	0.46875	5 5/8
	0.4740	5 11/16
	0.4792	5 3/4
31/64	0.484375	5 13/16
	0.4896	5 7/8
	0.4948	5 15/16
1/2	0.5000	6

A		B
	0.5052	6 1/16
	0.5104	6 1/8
33/64	0.515625	6 3/16
	0.5208	6 1/4
	0.5260	6 5/16
17/32	0.53125	6 3/8
	0.5365	6 7/16
	0.5417	6 1/2
35/64	0.546875	6 9/16
	0.5521	6 5/8
	0.5573	6 11/16
9/16	0.5625	6 3/4
	0.5677	6 13/16
	0.5729	6 7/8
37/64	0.578125	6 15/16
	0.5833	7
	0.5885	7 1/16
19/32	0.59375	7 1/8
	0.5990	7 3/16
	0.6042	7 1/4
	0.609375	7 5/16
39/64	0.6146	7 3/8
	0.6198	7 7/16
5/8	0.6250	7 1/2
	0.6302	7 9/16
	0.6354	7 5/8
41/64	0.640625	7 11/16
	0.6458	7 3/4
	0.6510	7 13/16
21/32	0.65625	7 7/8
	0.6615	7 15/16
	0.6667	8

A		B
43/64	0.671875	8 1/16
	0.6771	8 1/8
	0.6823	8 3/16
11/16	0.6875	8 1/4
	0.6927	8 5/16
	0.6979	8 3/8
45/64	0.703125	8 7/16
	0.7083	8 1/2
	0.7135	8 9/16
23/32	0.71875	8 5/8
	0.7240	8 11/16
	0.7292	8 3/4
47/64	0.734375	8 13/16
	0.7396	8 7/8
	0.7448	8 15/16
3/4	0.7500	9
	0.7552	9 1/16
	0.7604	9 1/8
49/64	0.765625	9 3/16
	0.7708	9 1/4
	0.7760	9 5/16
25/32	0.78125	9 3/8
	0.7865	9 7/16
	0.7917	9 1/2
51/64	0.796875	9 9/16
	0.8021	9 5/8
	0.8073	9 11/16
13/16	0.8125	9 3/4
	0.8177	9 13/16
	0.8229	9 7/8
53/64	0.828125	9 15/16
	0.8333	10

A		B
	0.8385	10 1/16
27/32	0.84375	10 1/8
	0.8490	10 3/16
	0.8542	10 1/4
55/64	0.859375	10 5/16
	0.8646	10 3/8
	0.8698	10 7/16
7/8	0.8750	10 1/2
	0.8802	10 9/16
	0.8854	10 5/8
57/64	0.890625	10 11/16
	0.8958	10 3/4
	0.9010	10 13/16
29/32	0.90625	10 7/8
	0.9115	10 15/16
	0.9167	11
59/64	0.921875	11 1/16
	0.9271	11 1/8
	0.9323	11 3/16
15/16	0.9375	11 1/4
	0.9427	11 5/16
	0.9479	11 3/8
61/64	0.953125	11 7/16
	0.9583	11 1/2
	0.9635	11 9/16
31/32	0.96875	11 5/8
	0.9740	11 11/16
	0.9792	11 3/4
63/64	0.984375	11 13/16
	0.9896	11 7/8
	0.9948	11 15/16
1	1.0000	12

Illinois Department of Transportation

PASSED January 1, 1997
ENGINEER OF POLICY AND PROCEDURES

APPROVED January 1, 1997
ENGINEER OF DESIGN AND ENVIRONMENT

ISSUED 1-1-97

A = Fractions of Inch or Foot

B = Inch Equivalents to Foot Fractions

DATE	REVISIONS
1-1-97	New Standard.

DECIMAL OF AN INCH AND OF A FOOT

STANDARD 001006

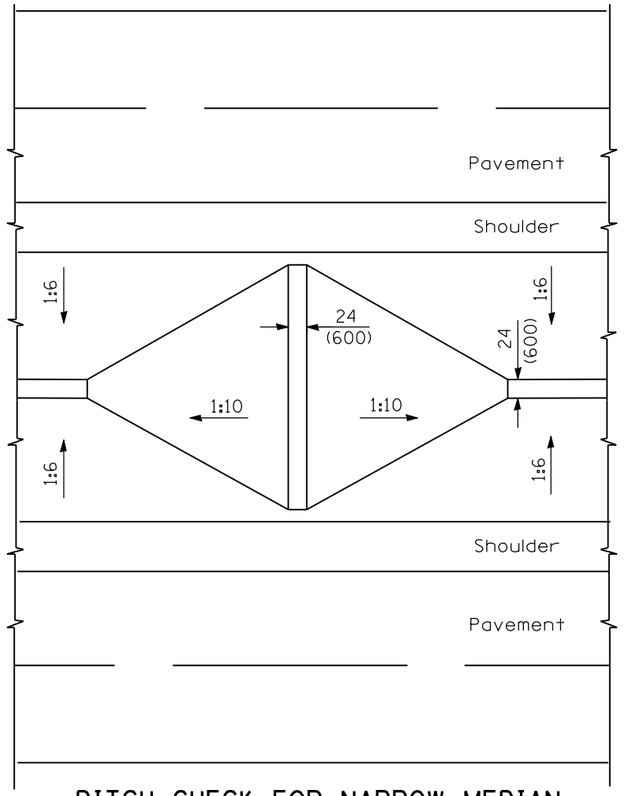

DITCH CHECK FOR NARROW MEDIAN

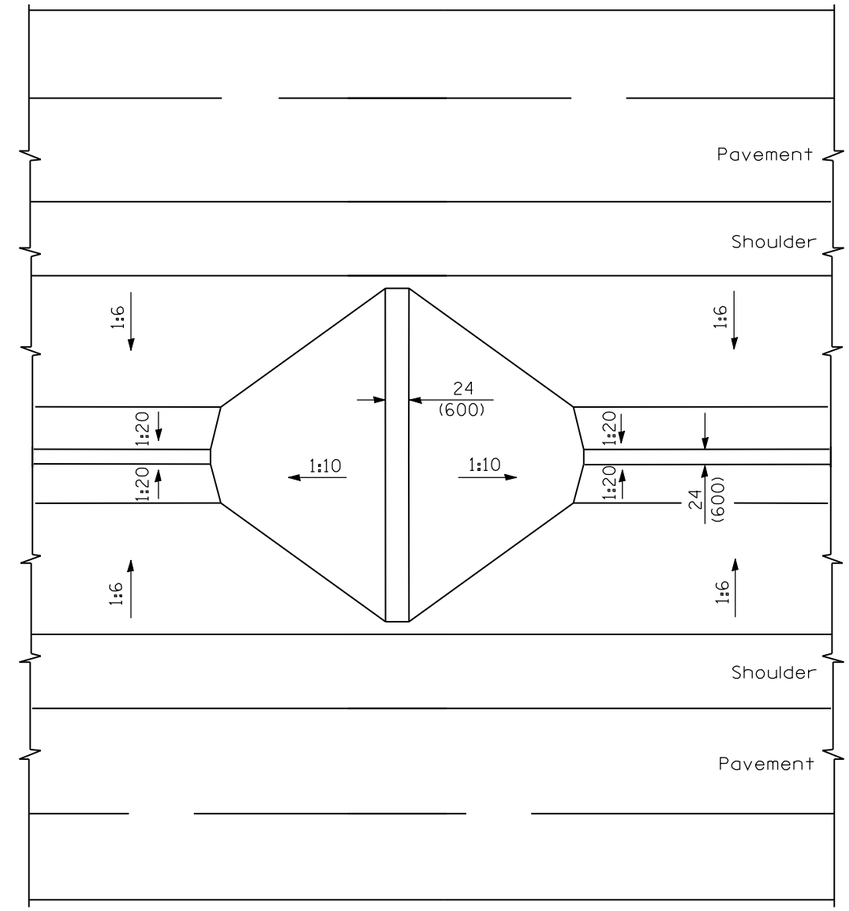

DITCH CHECK FOR WIDE MEDIAN

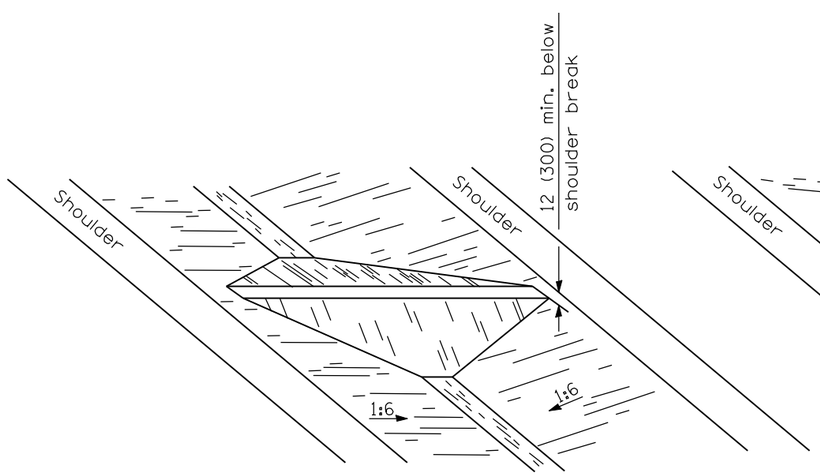

VIEW OF NARROW MEDIAN

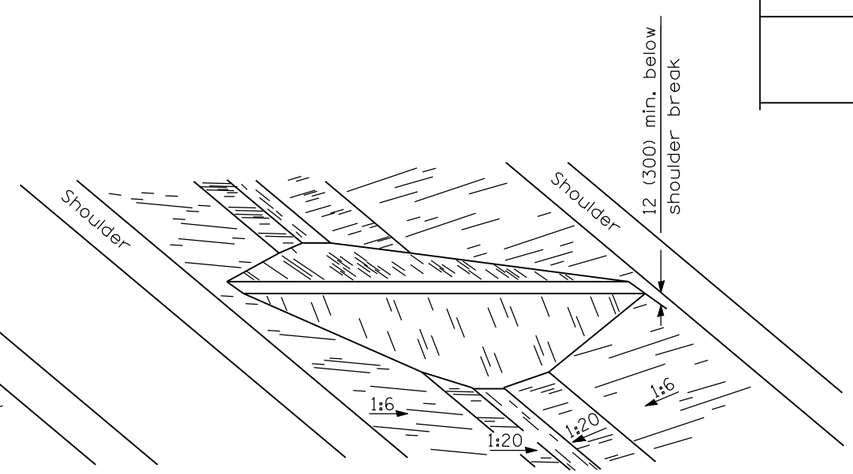

VIEW OF WIDE MEDIAN

GENERAL NOTES

All slope ratios are expressed as units of vertical displacement to units of horizontal displacement (V:H).

All dimensions are in inches (millimeters) unless otherwise shown.

Illinois Department of Transportation

PASSED January 1, 2008
ENGINEER OF POLICY AND PROCEDURES

APPROVED January 1, 2008
ENGINEER OF DESIGN AND ENVIRONMENT

ISSUED 1-1-97

DATE	REVISIONS
1-1-08	Switched units to English (metric).
1-1-97	Renum. Standard 2355-1.

EARTH MEDIAN DITCH CHECK

STANDARD 202001-01

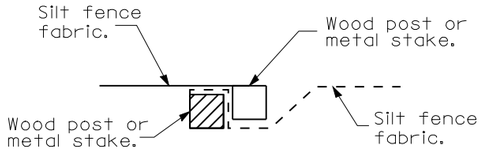

Place end-post (stake) of first silt fence adjacent to end-post (stake) of second silt fence with fabric positioned as swown.

STEP 1

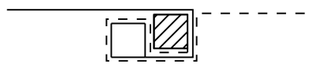

Rotate posts (stakes) together, 180° clockwise and drive both posts (stakes) 18 (450) into ground.

STEP 2

ATTACHING TWO SILT FILTER FENCES

(Not applicable for J-hooks)

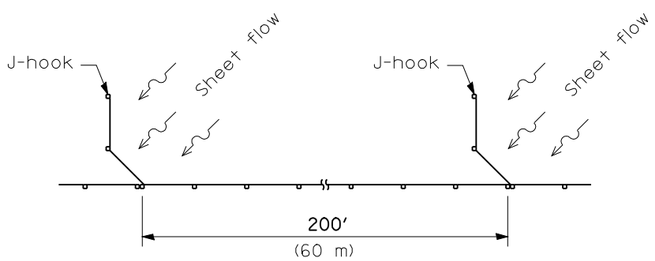

SILT FILTER J-HOOK PLACEMENT

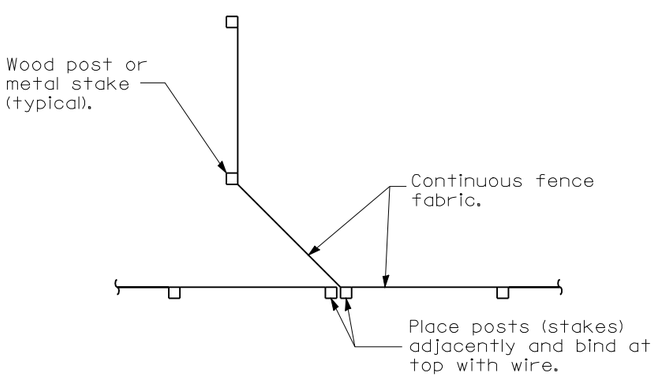

J-HOOK

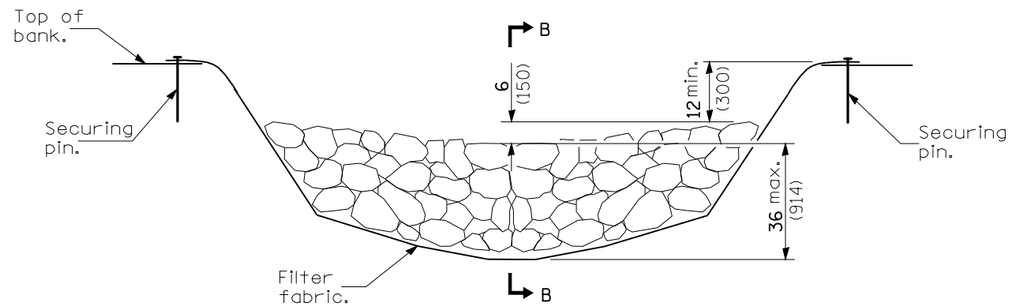

ELEVATION

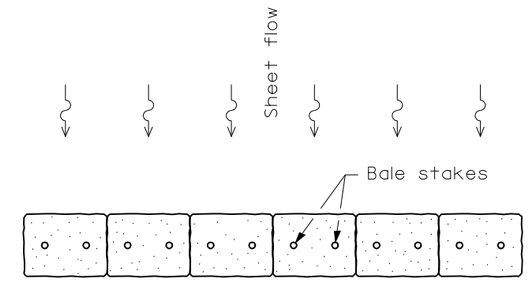

PLAN

* When the ditch check is within the clear zone and the road is open to traffic, the traffic approach slope of the aggregate shall be 1:4 (V:H).

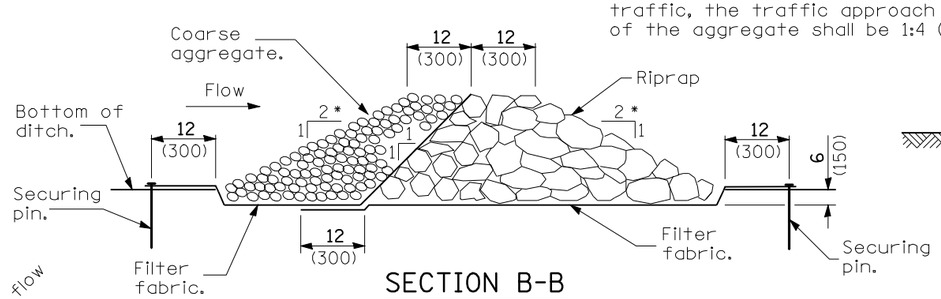

SECTION B-B

AGGREGATE DITCH CHECK

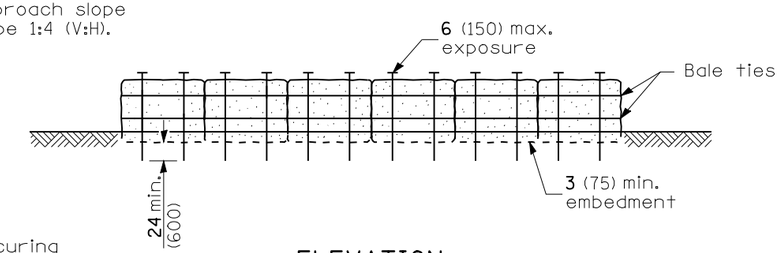

ELEVATION

HAY OR STRAW BALES AS A PERIMETER EROSION BARRIER

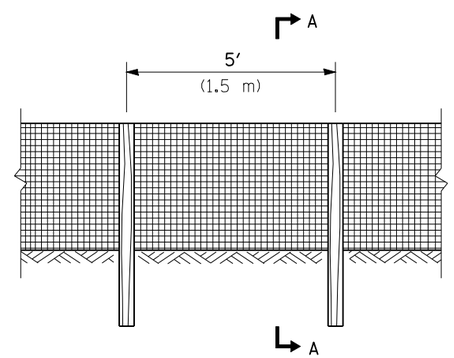

ELEVATION

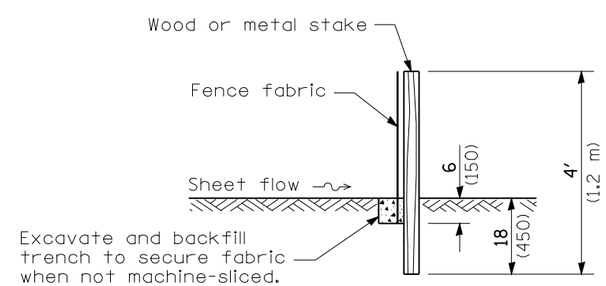

SECTION A-A

SILT FILTER FENCE AS A PERIMETER EROSION BARRIER

GENERAL NOTES

The installation details and dimensions shown for perimeter erosion barriers shall also apply for inlet and pipe protection.

All dimensions are in inches (millimeters) unless otherwise shown.

Illinois Department of Transportation

PASSED January 1, 2010
ENGINEER OF POLICY AND PROCEDURES
APPROVED January 1, 2010
ENGINEER OF DESIGN AND ENVIRONMENT

ISSUED 1-1-97

DATE	REVISIONS
1-1-10	Added J-hooks, added
	Two Fence attachment
	detail, mod. ditch check.
1-1-08	Switched units to
	English (metric) and
	rev. silt filter fence.

TEMPORARY EROSION CONTROL SYSTEMS

(Sheet 1 of 2)

STANDARD 280001-05

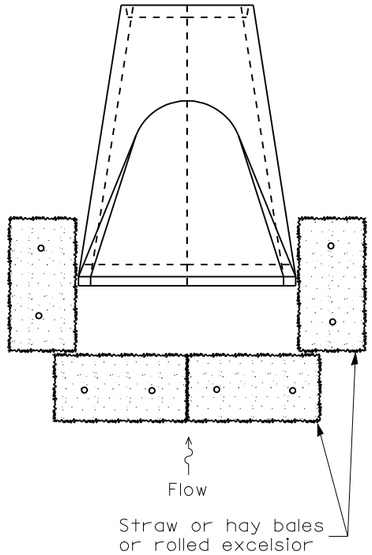

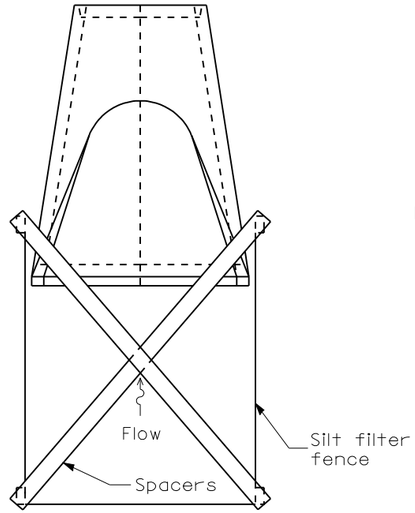

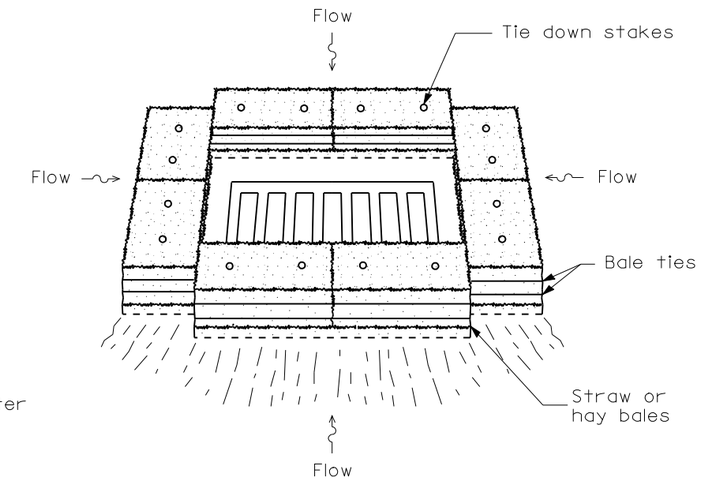

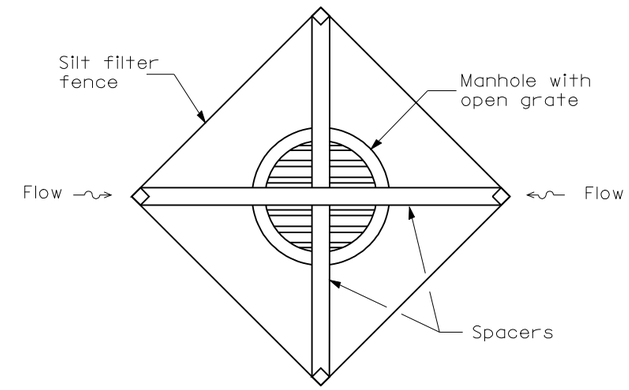

INLET AND PIPE PROTECTION

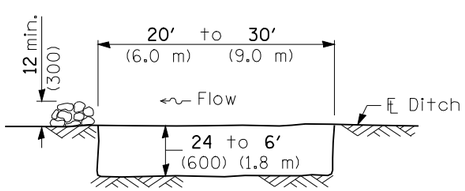

The performance of the basin will improve if put into a series.

ELEVATION

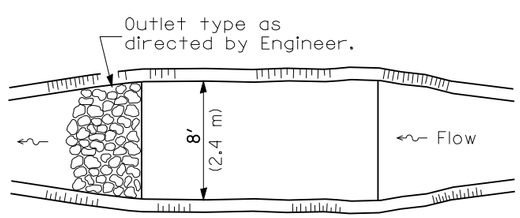

The long dimension should be parallel with the direction of the flow. Accumulated silt shall be removed anytime the basins become 75% filled.

PLAN

SEDIMENT BASIN

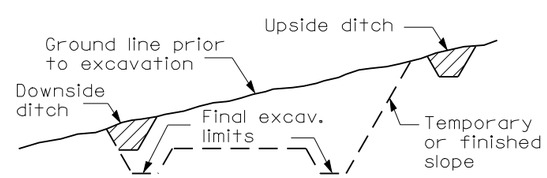

TYPICAL CUT CROSS-SECTION

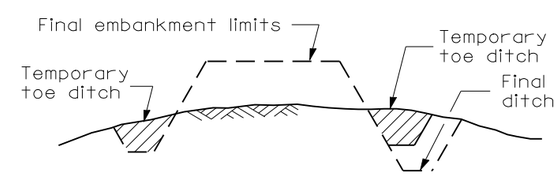

TYPICAL FILL CROSS-SECTION

TEMPORARY DITCHES FOR CUT & FILL SECTIONS

Illinois Department of Transportation

PASSED January 1, 2010
ENGINEER OF POLICY AND PROCEDURES

APPROVED January 1, 2010
ENGINEER OF DESIGN AND ENVIRONMENT

ISSUED 1-1-97

TEMPORARY EROSION CONTROL SYSTEMS

(Sheet 2 of 2)

STANDARD 280001–05

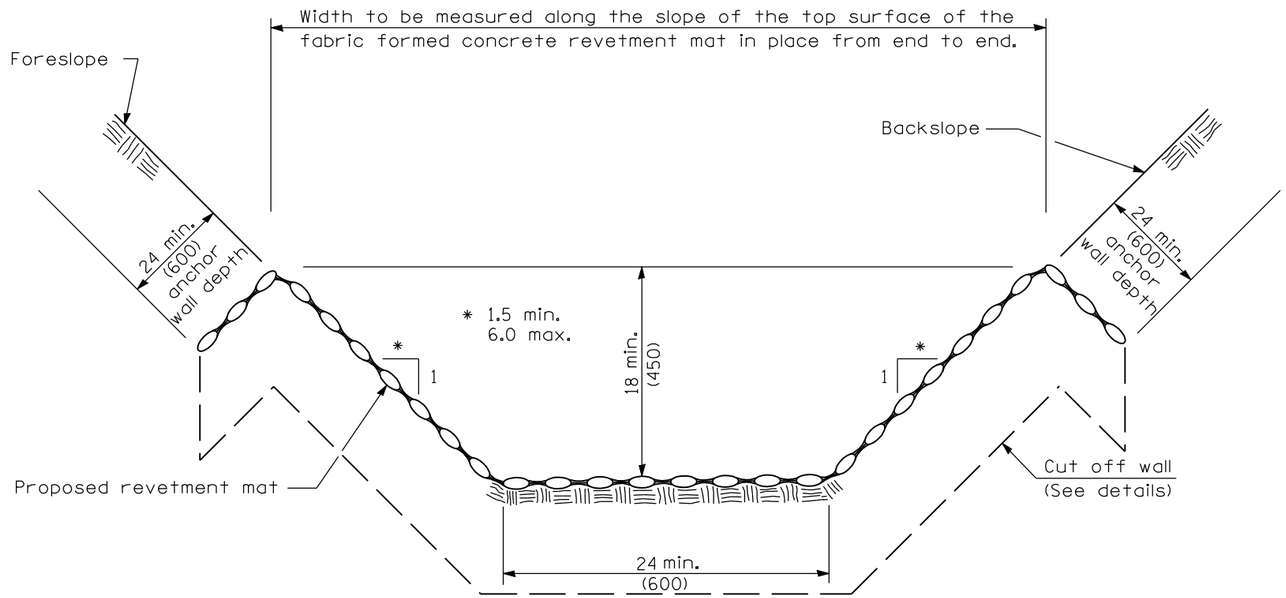

TYPICAL FABRIC FORMED CONCRETE REVETMENT MAT LINED DITCH

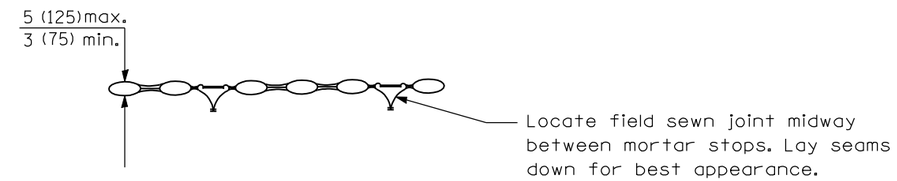

TYPICAL SECTION THRU FILTER POINT MAT

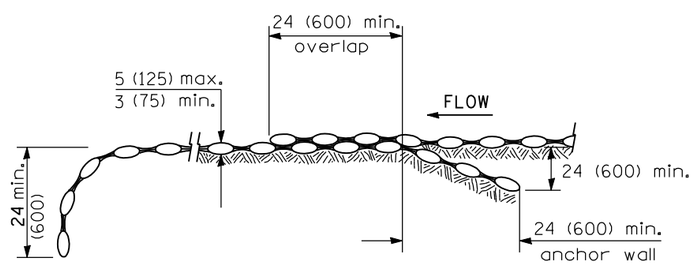

CUT OFF WALL DETAILS

TYPICAL LAP JOINTS W/ANCHOR WALL

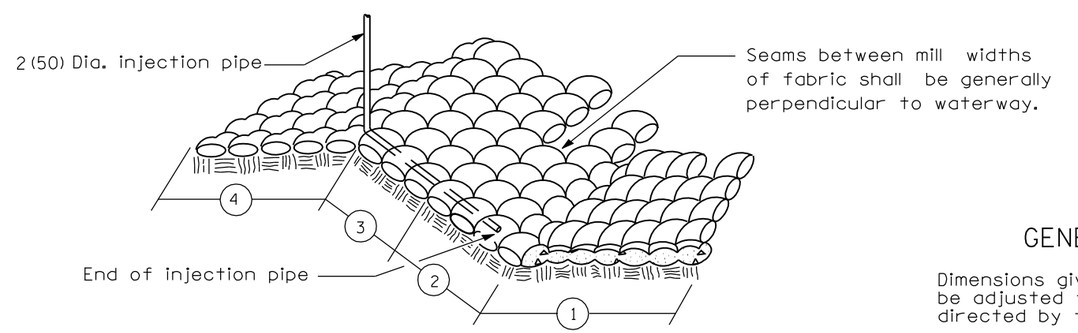

INSTALLATION DETAILS

1. In placing inserts through fabric use care to avoid breaking drop stitches.
2. —(1)— Indicates sequence of pour.

GENERAL NOTES

Dimensions given with minimum limits shall be adjusted for field conditions as directed by the Engineer.

All anchor walls on side slopes and at lap joints, as well as cut off walls, shall be installed in trenches.

Cut off walls shall be installed at the upstream and downstream ends.

All dimensions are in inches (millimeters) unless otherwise shown.

Illinois Department of Transportation

PASSED January 1, 2008
ENGINEER OF POLICY AND PROCEDURES
APPROVED January 1, 2008
ENGINEER OF DESIGN AND ENVIRONMENT

ISSUED 1-1-97

DATE	REVISIONS
1-1-08	Switched units to English (metric).
1-1-02	Revised second note.

FABRIC FORMED CONCRETE REVETMENT MATS

STANDARD 285001-02

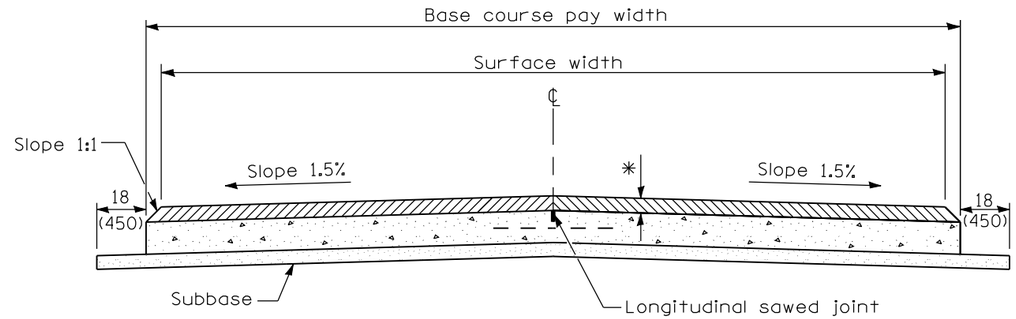

* HMA binder and surface courses

SECTION A-A

(TYPICAL 2 LANE WITH SHOULDERS)

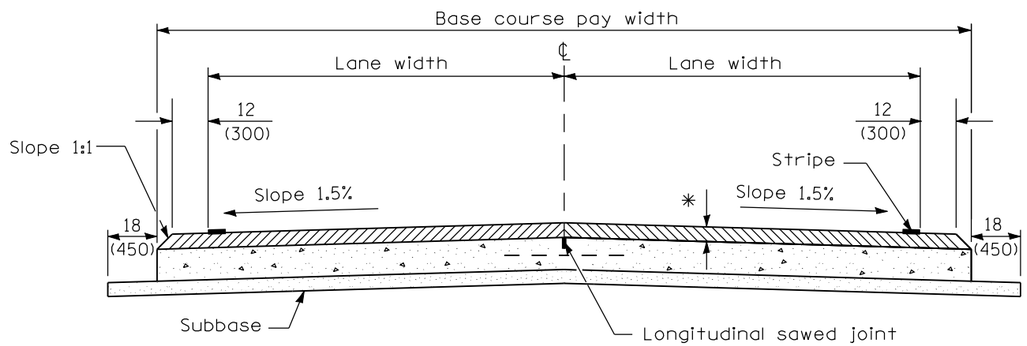

ALTERNATE SECTION A-A

(TYPICAL 2 LANE WITH SHOULDERS)

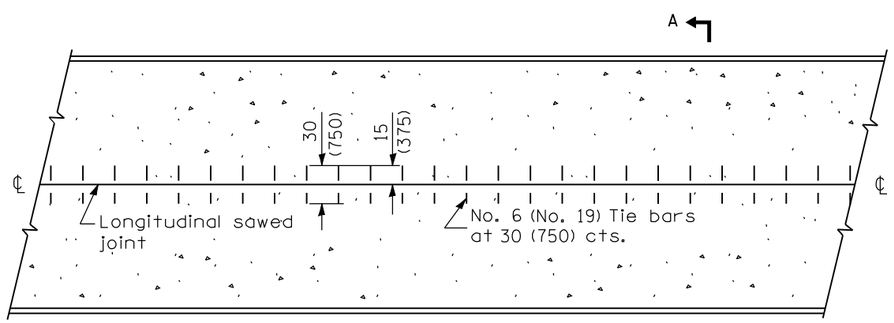

PLAN

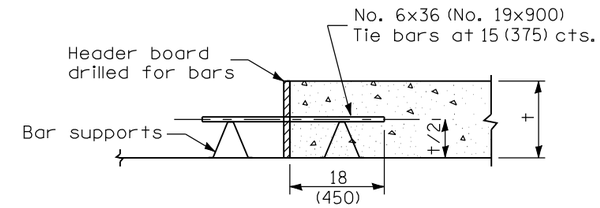

TRANSVERSE CONSTRUCTION JOINT

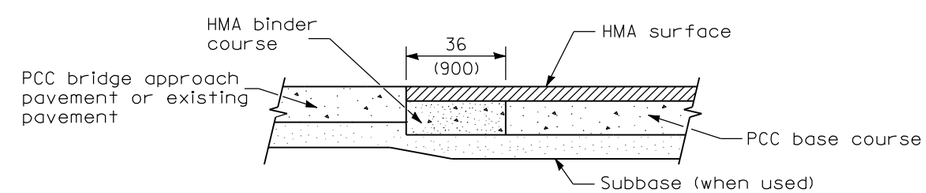

LONGITUDINAL SECTION SHOWING CONSTRUCTION ADJACENT TO PCC BRIDGE APPROACH PAVEMENT OR EXISTING PAVEMENT

GENERAL NOTES

The longitudinal sawed joint shall be as detailed on Standard 420001 except the sawed groove does not require sealing.

All dimensions are in inches (millimeters) unless otherwise shown.

Illinois Department of Transportation

PASSED January 1, 2008
ENGINEER OF POLICY AND PROCEDURES
APPROVED January 1, 2008
ENGINEER OF DESIGN AND ENVIRONMENT

ISSUED 1-1-97

DATE	REVISIONS
1-1-08	Switched units to
	English (metric).
1-1-07	Switched to Hot-Mix
	Asphalt (HMA)
	terminology.

PCC BASE COURSE WITH HMA BINDER AND SURFACE COURSES

STANDARD 353001-04

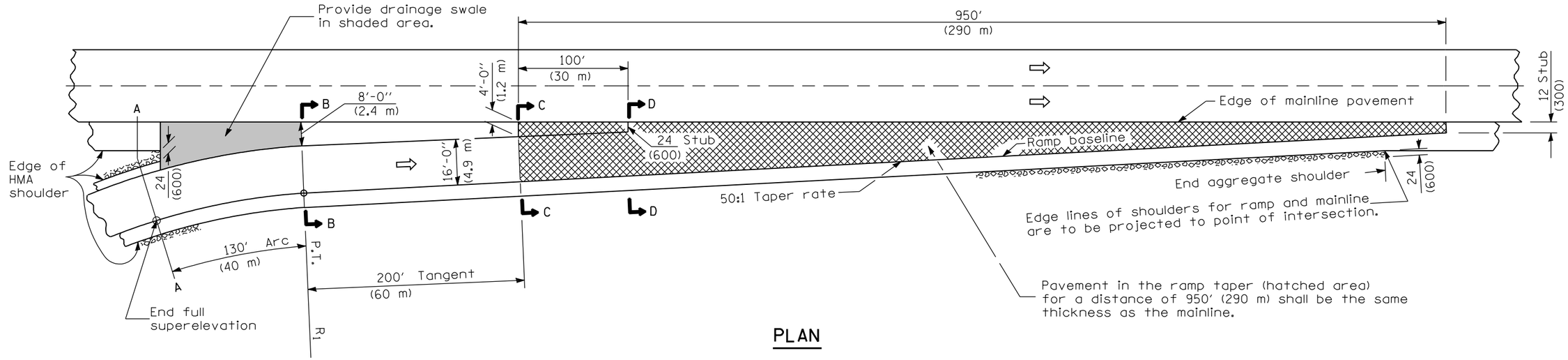

PLAN

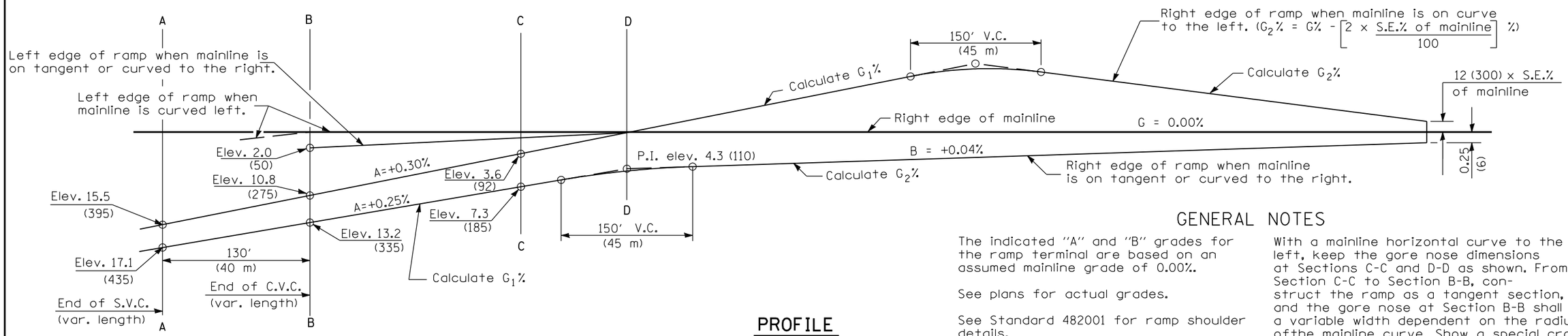

PROFILE

GENERAL NOTES

The indicated "A" and "B" grades for the ramp terminal are based on an assumed mainline grade of 0.00%.

See plans for actual grades.

See Standard 482001 for ramp shoulder details.

Between Sections A-A and B-B (shaded area), provide a drainage swale and flush inlet to enhance drainage.

When using grades expressed in %, the grade value shall be divided by 100 to obtain vertical offsets.

When radius R1 is less than 760 ft (230 m), the acceleration length shall be recalculated.

With a mainline horizontal curve to the left, keep the gore nose dimensions at Sections C-C and D-D as shown. From Section C-C to Section B-B, construct the ramp as a tangent section, and the gore nose at Section B-B shall be a variable width dependent on the radius ofthe mainline curve. Show a special cross-section on the plans for Section B-B.

With a mainline horizontal curve to the right, keep the gore nose dimensions at Sections D-D, C-C, and B-B as shown, and the edge of the ramp between Sections C-C and B-B shall be constructed as a compound curve tying Section C-C.

All dimensions are in inches (millimeters) unless otherwise shown.

Illinois Department of Transportation

PASSED January 1, 2008
ENGINEER OF POLICY AND PROCEDURES
APPROVED January 1, 2008
ENGINEER OF DESIGN AND ENVIRONMENT

ISSUED 1-1-97

DATE	REVISIONS
1-1-08	Switched units to
	English (metric).
	Revised General Notes.
1-1-07	Switched to Hot-Mix
	Asphalt (HMA)
	terminology.

ENTRANCE RAMP TERMINAL

(FLEXIBLE RAMP PAVEMENT ADJACENT TO FLEXIBLE MAINLINE PAVEMENT)

(Sheet 1 of 2)

STANDARD 406001-05

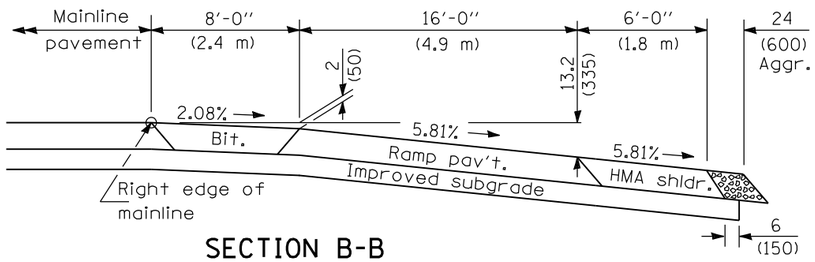

SECTION B-B

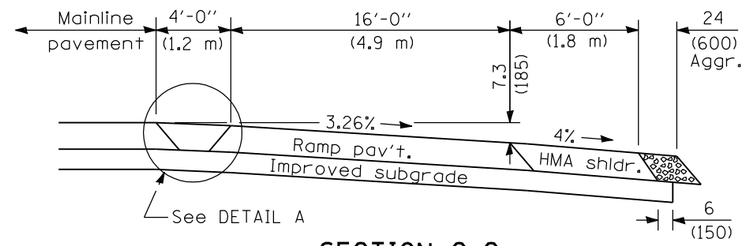

SECTION C-C

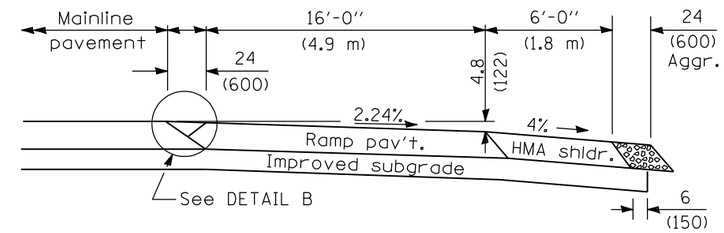

SECTION D-D

CROSS SECTIONS WHEN MAINLINE IS ON TANGENT OR CURVED TO THE RIGHT

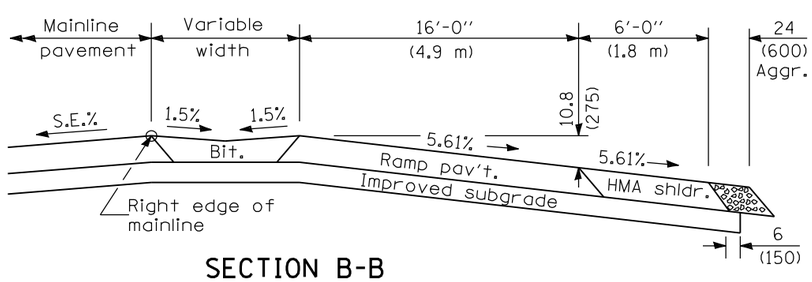

SECTION B-B

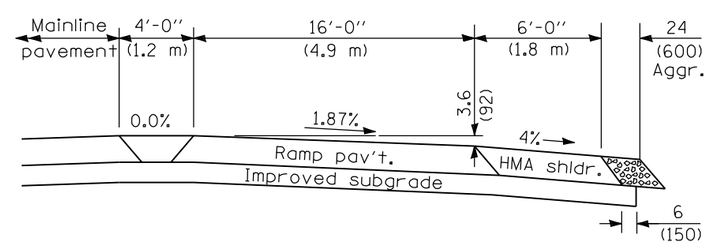

SECTION C-C

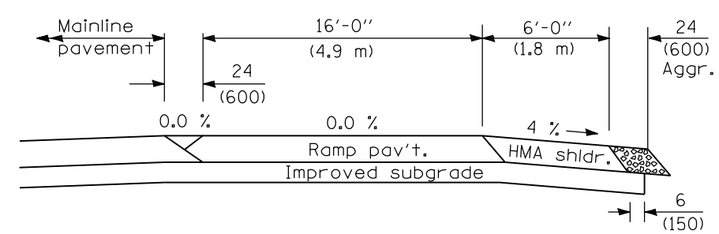

SECTION D-D

CROSS SECTIONS WHEN MAINLINE IS CURVED TO THE LEFT

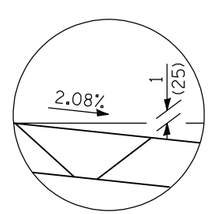

DETAIL A

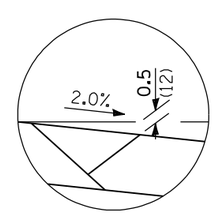

DETAIL B

Illinois Department of Transportation

PASSED January 1, 2008
ENGINEER OF POLICY AND PROCEDURES

APPROVED January 1, 2008
ENGINEER OF DESIGN AND ENVIRONMENT

ISSUED 1-1-97

ENTRANCE RAMP TERMINAL

(FLEXIBLE RAMP PAVEMENT ADJACENT TO FLEXIBLE MAINLINE PAVEMENT)

(Sheet 2 of 2)

STANDARD 406001-05

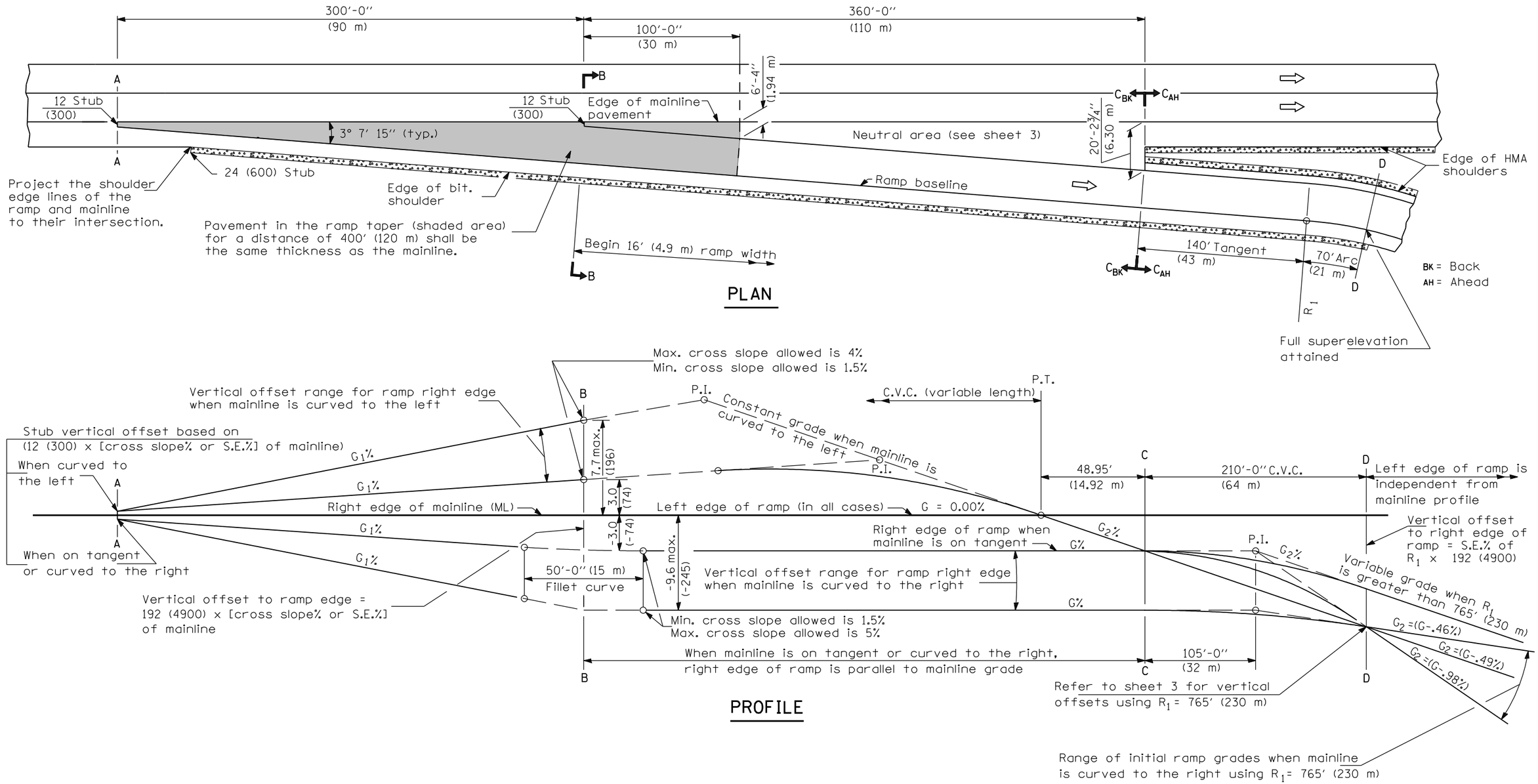

See Sheet 3 for GENERAL NOTES

Illinois Department of Transportation

PASSED January 1, 2008
ENGINEER OF POLICY AND PROCEDURES
APPROVED January 1, 2008
ENGINEER OF DESIGN AND ENVIRONMENT

ISSUED 1-1-97

DATE	REVISIONS
1-1-08	Switched units to
	English (metric).
1-1-07	Switched to Hot-Mix
	Asphalt (HMA)
	terminology.

EXIT RAMP TERMINAL

(FLEXIBLE RAMP PAVEMENT ADJACENT TO FLEXIBLE MAINLINE PAVEMENT)

(Sheet 1 of 3)

STANDARD 406101–04

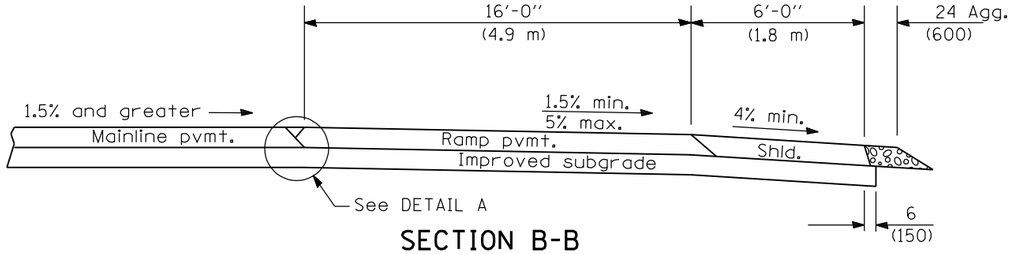

SECTION B-B

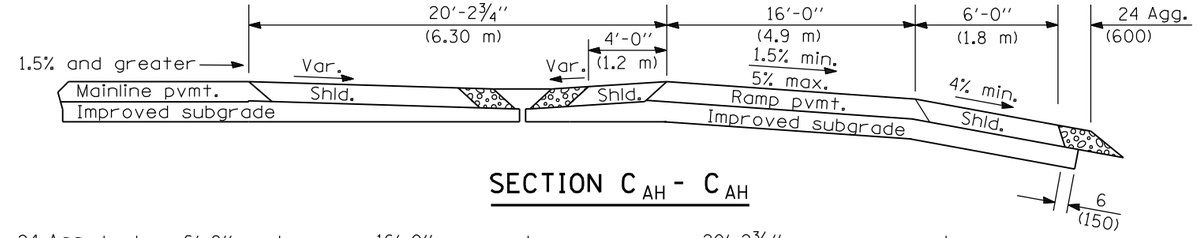

SECTION C_{AH} - C_{AH}

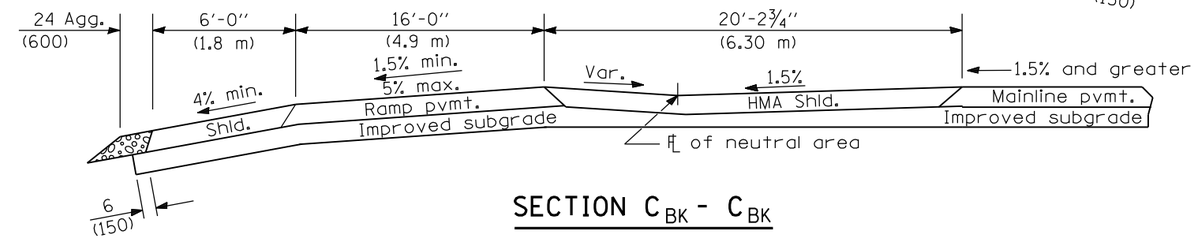

SECTION C_{BK} - C_{BK}

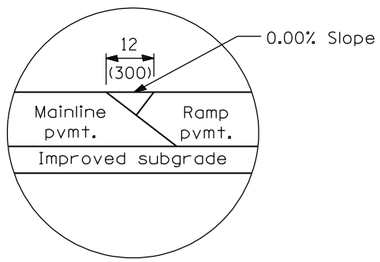

DETAIL A

WHEN MAINLINE IS ON TANGENT OR CURVED TO THE RIGHT

BK = Back
AH = Ahead

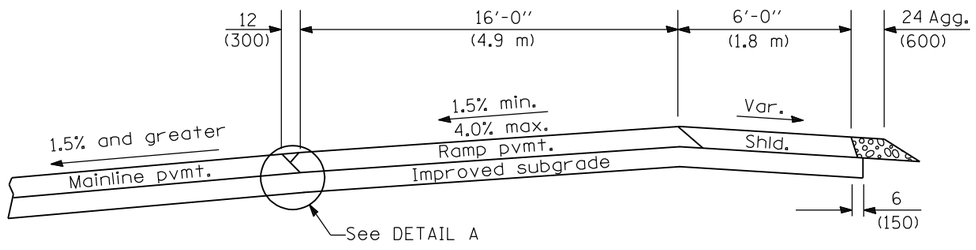

SECTION B-B

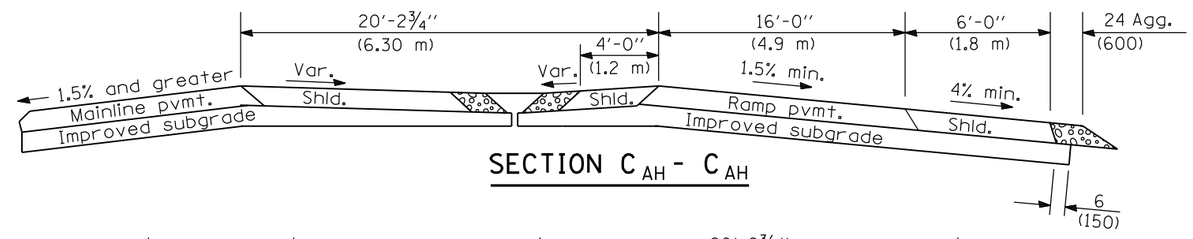

SECTION C_{AH} - C_{AH}

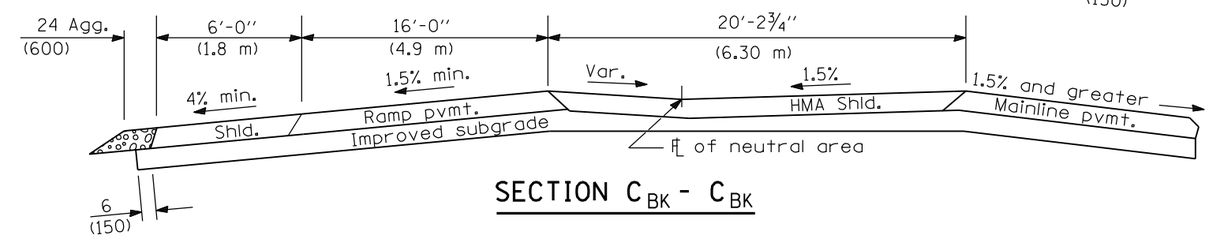

SECTION C_{BK} - C_{BK}

WHEN MAINLINE IS CURVED TO THE LEFT

See Sheet 3 for GENERAL NOTES

Illinois Department of Transportation

PASSED January 1, 2008
ENGINEER OF POLICY AND PROCEDURES
APPROVED January 1, 2008
ENGINEER OF DESIGN AND ENVIRONMENT

ISSUED 1-1-97

EXIT RAMP TERMINAL

(FLEXIBLE RAMP PAVEMENT ADJACENT TO FLEXIBLE MAINLINE PAVEMENT)

(Sheet 2 of 3)

STANDARD 406101-04

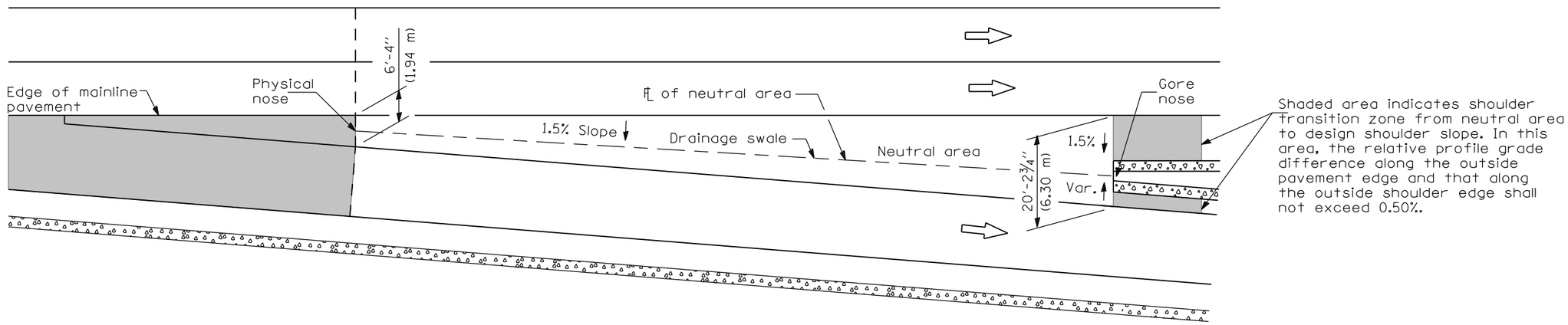

DETAILS FOR DRAINAGE IN NEUTRAL AREA

Vertical offsets in inches for right ① edge of ramp, when R_1 = 765′			
Sections	Mainline on Tangent	Mainline Curved Right	Mainline Curved Left
A	- 0.18	S.E. % ML x 12	S.E. % ML x 12 ②
B	- 3.0	S.E. % ML x 192	S.E. % ML x 192 ②
C	- 3.0	S.E. % ML x 192	- 3.0
D	- 15.4	- 15.4	- 15.4

① Vertical offsets in mm for right edge of ramp, when R_1 = 230 m			
Sections	Mainline on Tangent	Mainline Curved Right	Mainline Curved Left
A	- 5	S.E.% ML x 300	S.E.% ML x 300 ②
B	- 74	S.E.% ML x 4900	S.E.% ML x 4900 ②
C	- 74	S.E. % ML x 4900	- 74
D	- 392	- 392	- 392

① Vertical offset values are calculated and based on the right edge of mainline pavement at 0.0 % grade.

② The vertical offsets of these points are above the mainline pavement and lie on an upgrade in relationship to the mainline grade.

③ S.E.=Superelevation Rate

GENERAL NOTES

The initial ramp grade (G_2) is based on the line generated through the PI that is 105 ft. (32 m) past Section C-C and the point created by the vertical offset at Section D-D.

See plans for actual grades.

See Standard 482001 for ramp shoulder details.

In the neutral area, provide a swale and flush inlet to enhance drainage.

When using grades expressed in %, the grade values shall be divided by 100 to obtain vertical offsets.

Where an exit ramp terminal is proposed adjacent to a mainline horizontal curve, construct the edge of the terminal by using offset widths, and for the terminal segment downstream from Section C-C to R_1, construct the ramp as a 140 ft. (43 m) tangent section.

All dimensions are in inches (millimeters) unless otherwise shown.

Illinois Department of Transportation

PASSED January 1, 2008
ENGINEER OF POLICY AND PROCEDURES
APPROVED January 1, 2008
ENGINEER OF DESIGN AND ENVIRONMENT

ISSUED 1-1-97

EXIT RAMP TERMINAL

(FLEXIBLE RAMP PAVEMENT ADJACENT TO FLEXIBLE MAINLINE PAVEMENT)

(Sheet 3 of 3)

STANDARD 406101-04

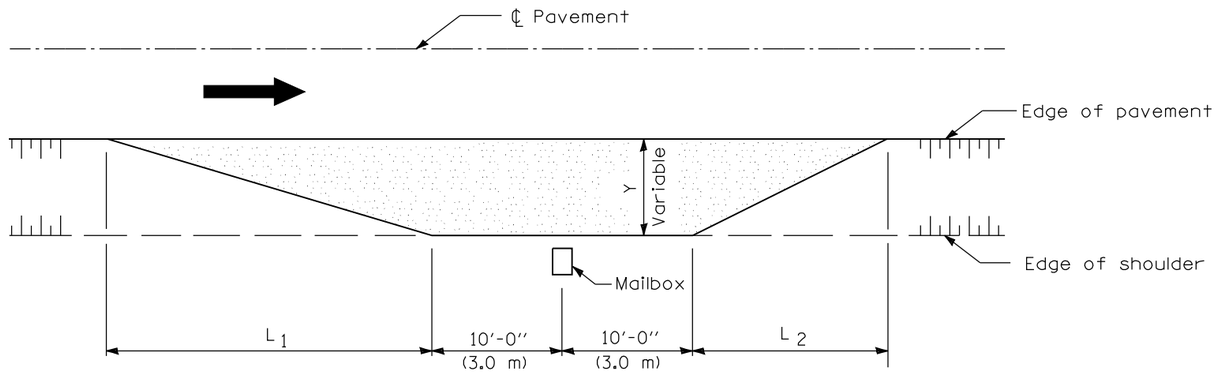

TYPICAL APPLICATION

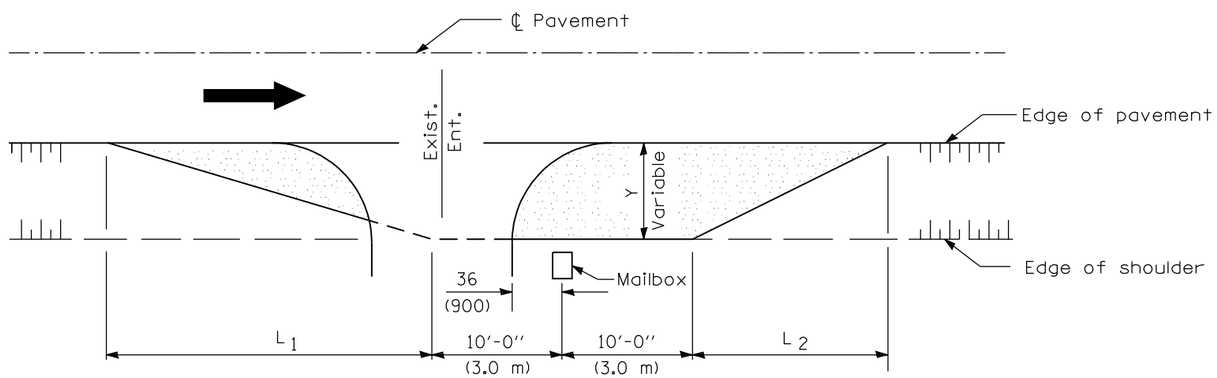

MAILBOX ON FARSIDE OF ENTRANCE

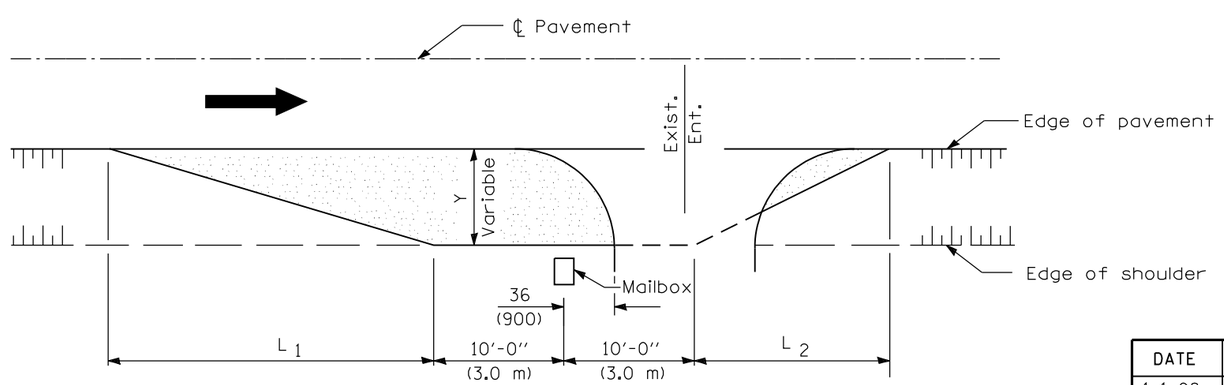

MAILBOX ON NEARSIDE OF ENTRANCE

DIMENSIONS - ft. (m)		
Width of Shoulder	4-8 (1.2-2.4)	10 (3.0)
Width of Turnout (Y)	8 (2.4)	8-10 (2.4-3.0)
L_1	32 (9.5)	32 (9.5)
L_2	20 (6.0)	20 (6.0)

GENERAL NOTES

Mailboxes shall be mounted such that the face of the mailbox is 6 (150) to 12 (300), and the post a minimum of 24 (600), from the edge of the turnout surfacing.

All dimensions are in inches (millimeters) unless otherwise shown.

Illinois Department of Transportation

PASSED January 1, 2008
ENGINEER OF POLICY AND PROCEDURES
APPROVED January 1, 2008
ENGINEER OF DESIGN AND ENVIRONMENT

ISSUED 1-1-97

DATE	REVISIONS
1-1-08	Switched units to
	English (metric).
1-1-97	Renum. Standard 2171-1.
	Deleted note regarding
	Township & Dist. roads

MAILBOX TURNOUT

STANDARD 406201-01

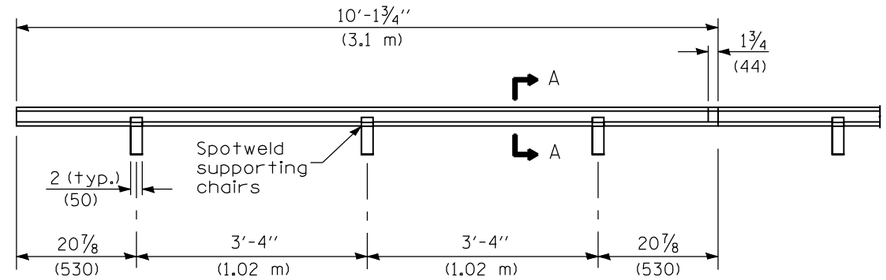

TYPE C METAL JOINT

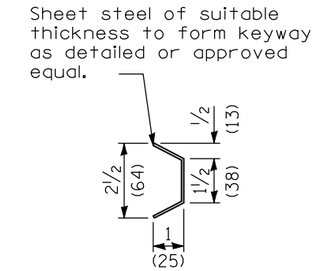

SECTION A-A

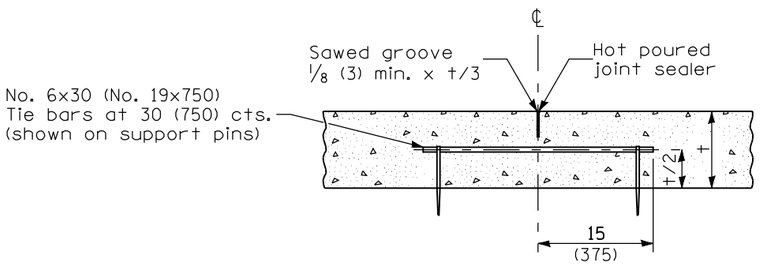

LONGITUDINAL SAWED JOINT

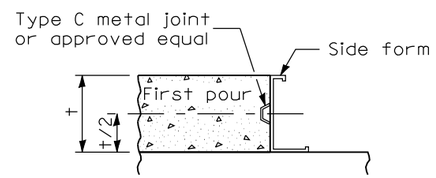

LONGITUDINAL KEYED JOINT

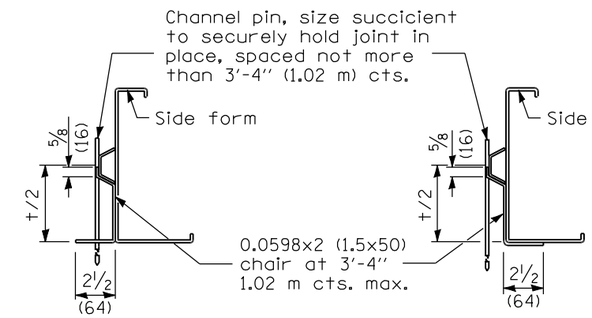

SUPPORTING CHAIR ALTERNATE

SUPPORTING CHAIR ALTERNATE

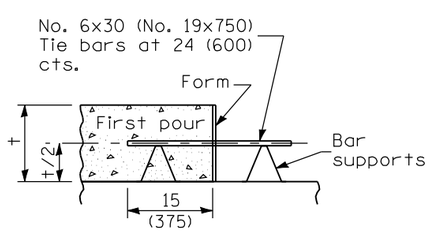

LONGITUDINAL CONSTRUCTION JOINT

(TIE BAR FORMED IN PLACE)

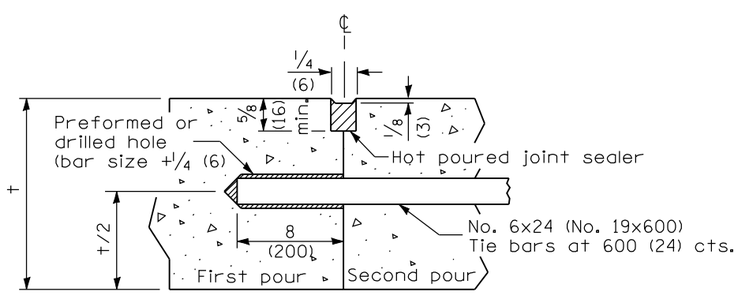

LONGITUDINAL CONSTRUCTION JOINT

(TIE BAR GROUTED IN PLACE)

GENERAL NOTES

All slope ratios are expressed as units of vertical displacement to units of horizontal displacement (V:H).

All dimensions are in inches (millimeters) unless otherwise shown.

Illinois Department of Transportation

PASSED January 1, 2008
ENGINEER OF POLICY AND PROCEDURES
APPROVED January 1, 2008
ENGINEER OF DESIGN AND ENVIRONMENT

ISSUED 1-1-97

DATE	REVISIONS
1-1-08	Switched units to English (metric).
8-1-05	Added supports to long. constr. jt. and revised note for trans. exp. jt.

PAVEMENT JOINTS

(Sheet 1 of 2)

STANDARD 420001-07

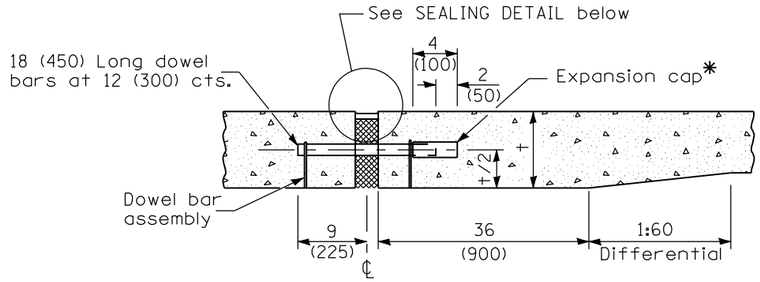

TRANSVERSE EXPANSION JOINT

(FOR PAVEMENTS WITH UNEQUAL THICKNESS)

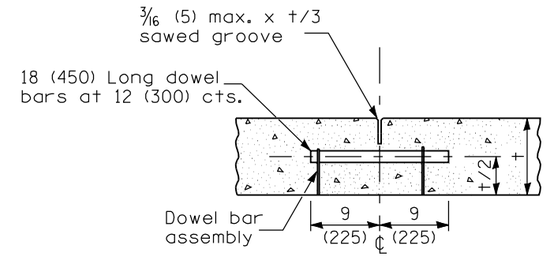

TRANSVERSE CONTRACTION JOINT

* Expansion caps shall be installed on the exposed end of each dowel bar once the header has been removed and the joint filler material has been installed.

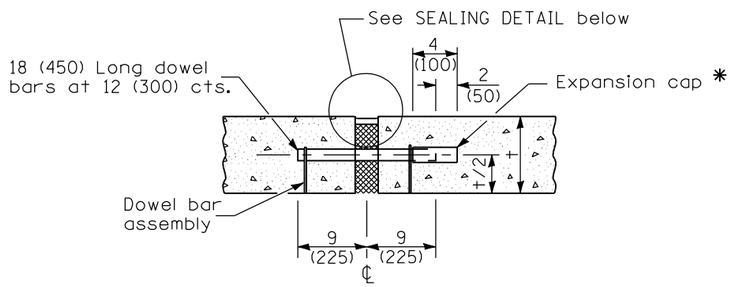

TRANSVERSE EXPANSION JOINT

(FOR PAVEMENTS WITH EQUAL THICKNESS)

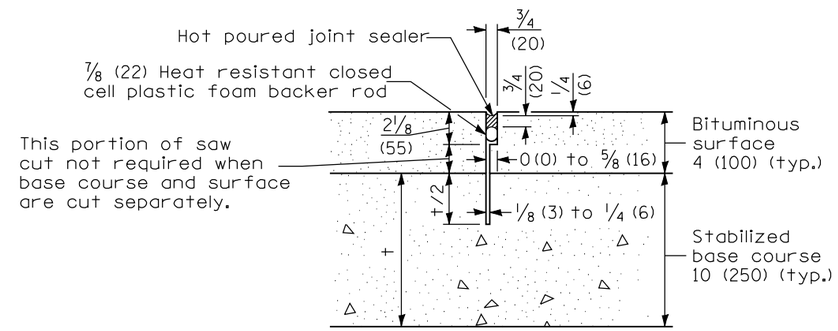

TRANSVERSE CONTRACTION JOINT

(FOR CAM, CFA AND LFA BASE COURSE MIXTURES)

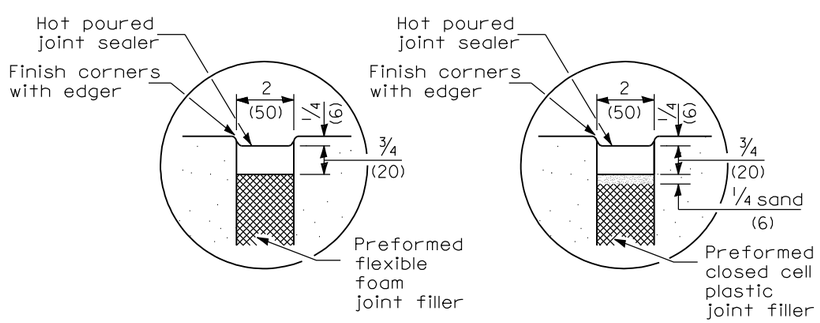

SEALING DETAIL

DOWEL BAR TABLE	
PAVEMENT THICKNESS	DOWEL BAR DIAMETER
8 (200) or greater	1 1/2 (38)
7 (175) thru 7.99 (199)	1 1/4 (32)
Less than 7 (175)	1 (25)

Illinois Department of Transportation

PASSED January 1, 2008
ENGINEER OF POLICY AND PROCEDURES

APPROVED January 1, 2008
ENGINEER OF DESIGN AND ENVIRONMENT

ISSUED 1-1-97

PAVEMENT JOINTS

(Sheet 2 of 2)

STANDARD 420001-07

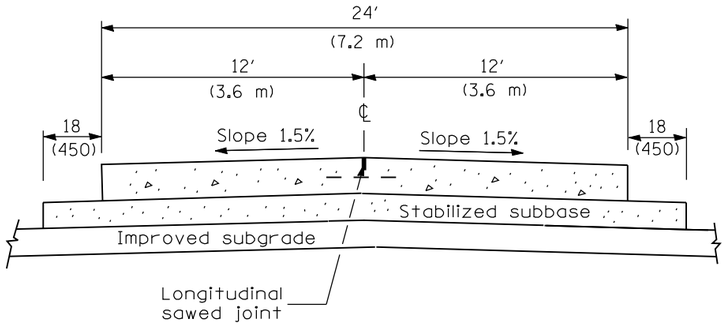

SECTION A-A

(TYPICAL 2-LANE WITH SHOULDERS)

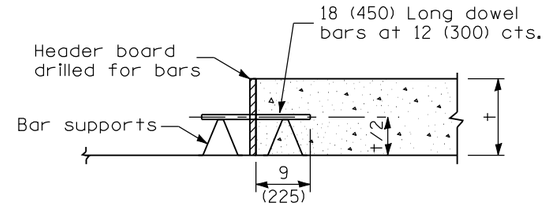

TRANSVERSE CONSTRUCTION JOINT

* The 15′ (4.5 m) dimension shall be adjusted to 12′ (3.6 m) min. to 18′ (5.5 m) max. when placed adjacent to existing pcc pavement structure so that the joints are in prolongation.

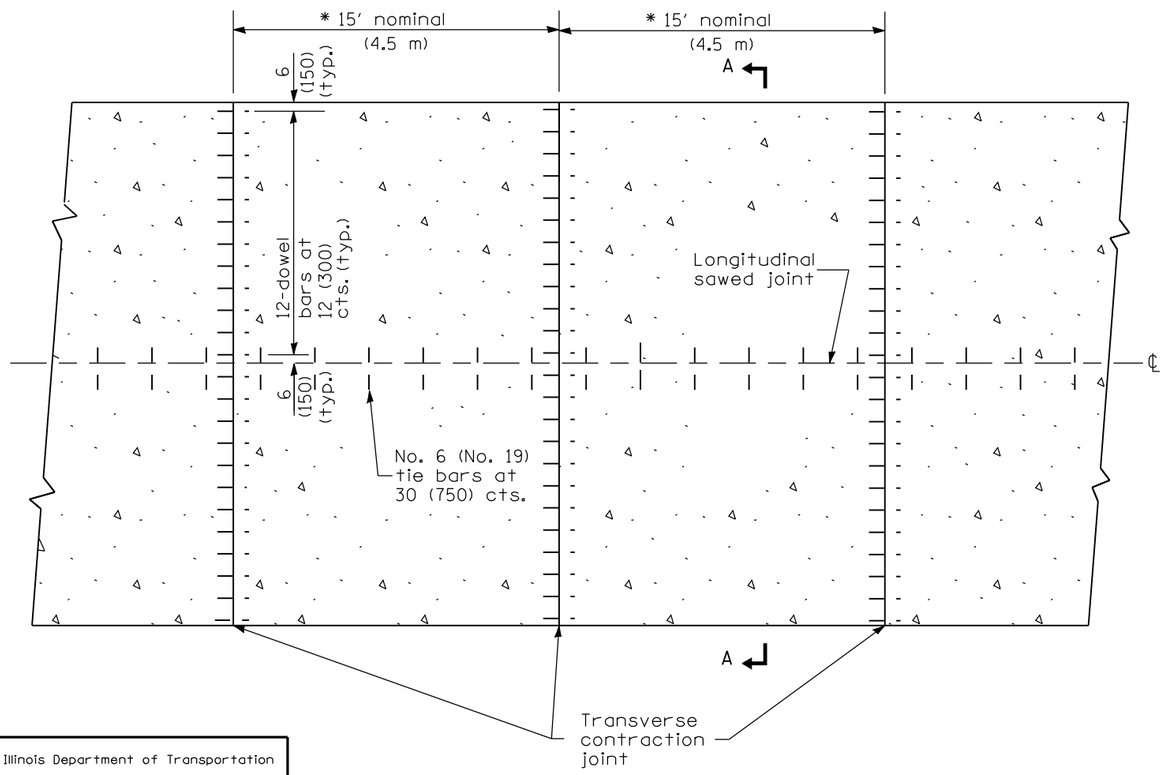

PLAN

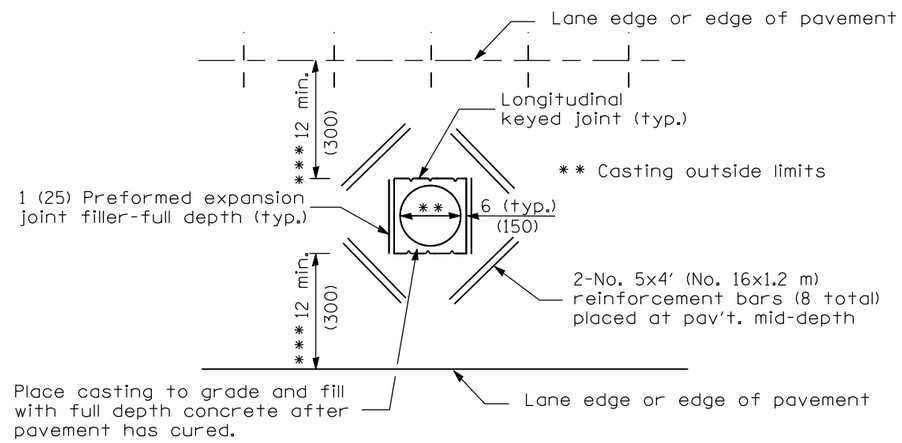

*** When the 12 (300) minimum cannot be achieved, the transverse joints shall be extended to either the longitudinal joint or edge of pavement.

DETAIL OF ADDED REINFORCEMENT FOR PAVEMENT BLOCKS-OUTS

GENERAL NOTES

See Standard 420001 for details of joints not shown.

All dimensions are in inches (millimeters) unless otherwise shown.

Illinois Department of Transportation

PASSED January 1, 2008
ENGINEER OF POLICY AND PROCEDURES
APPROVED January 1, 2008
ENGINEER OF DESIGN AND ENVIRONMENT

ISSUED 1-1-97

DATE	REVISIONS
1-1-08	Switched units to
	English (metric).
8-1-05	Added "Stabilized" to
	subbase and bar
	supports to constr. jt.

24′ (7.2 m) JOINTED PCC PAVEMENT

STANDARD 420101-04

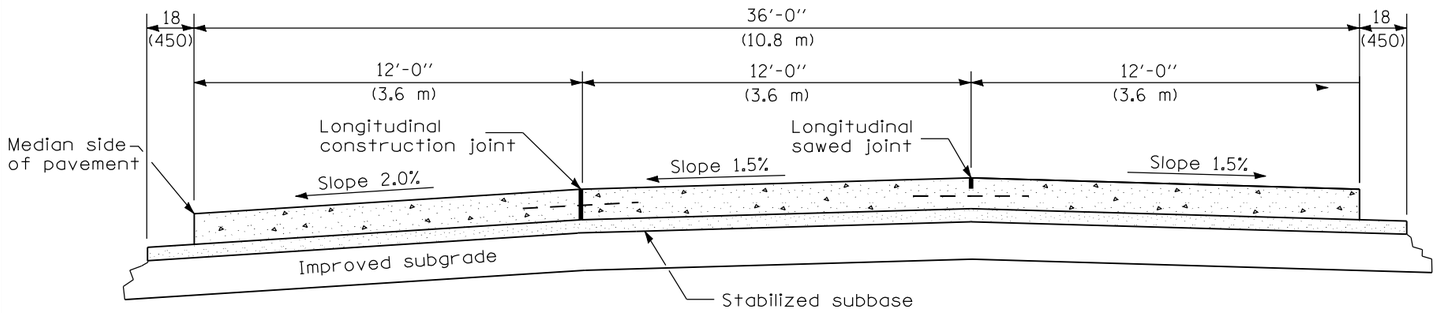

SECTION A-A

(TYPICAL 3-LANE, 1-WAY WITH SHOULDERS)

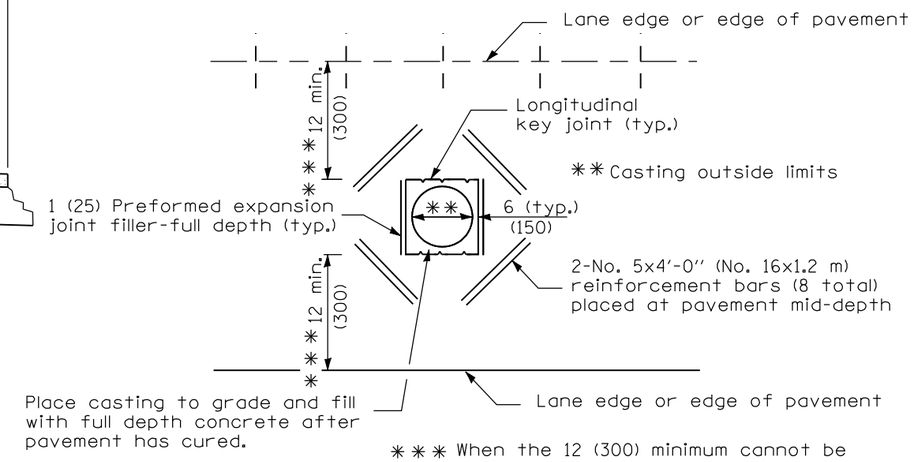

*** When the 12 (300) minimum cannot be achieved, the transverse joints shall be extended to either the longitudinal joint or edge of pavement.

DETAIL OF ADDED REINFORCEMENT FOR PAVEMENT BLOCK-OUTS

* The 15′ (4.5 m) dimension shall be adjusted to 12′ (3.6 m) min. to 18′ (5.5 m) max. when placed adjacent to existing pcc pavement structure so that the joints are in prolongation.

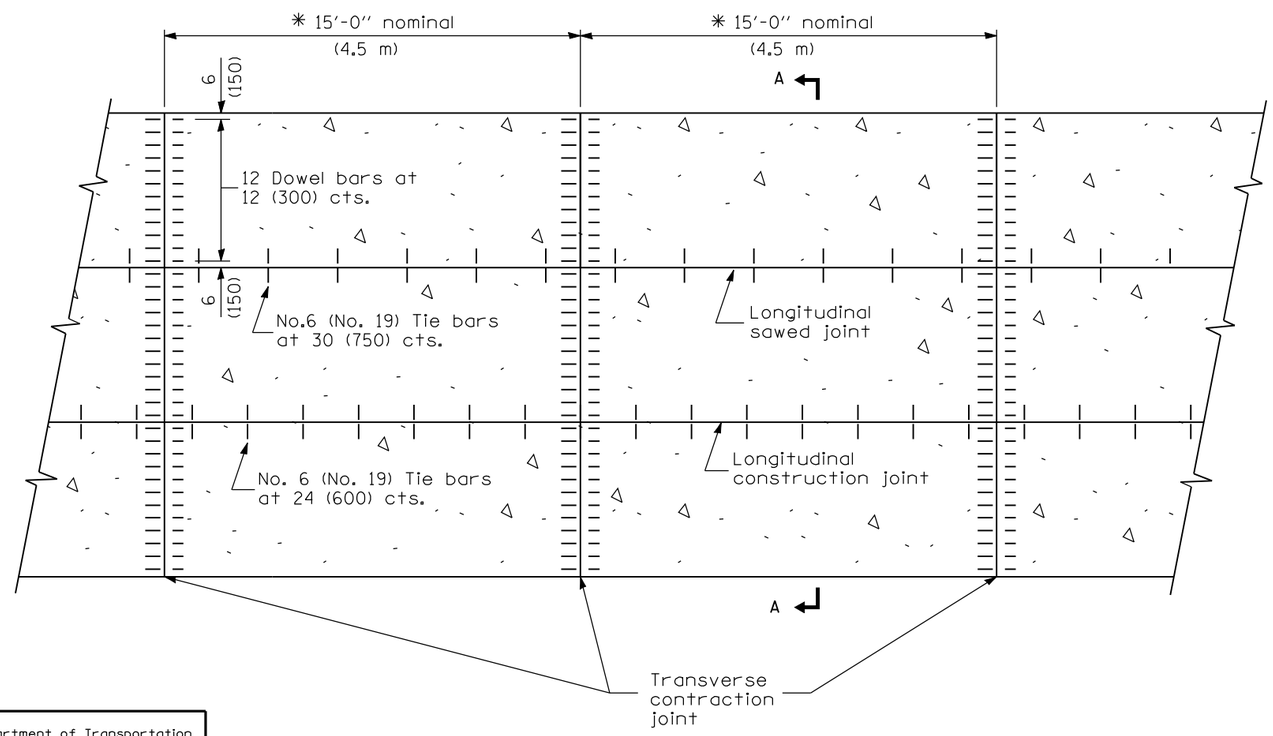

PLAN

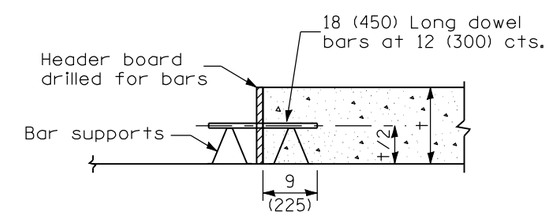

TRANSVERSE CONSTRUCTION JOINT

GENERAL NOTES

See Standard 420001 for details of joints not shown.

All dimensions are in inches (millimeters) unless otherwise shown.

Illinois Department of Transportation

PASSED January 1, 2008
ENGINEER OF POLICY AND PROCEDURES

APPROVED January 1, 2008
ENGINEER OF DESIGN AND ENVIRONMENT

ISSUED 1-1-97

DATE	REVISIONS
1-1-08	Switched units to
	English (metric).
8-1-05	Added "Stabilized" to
	subbase and bar
	supports to constr. jt.

36′ (10.8 m) JOINTED PCC PAVEMENT

STANDARD 420106–04

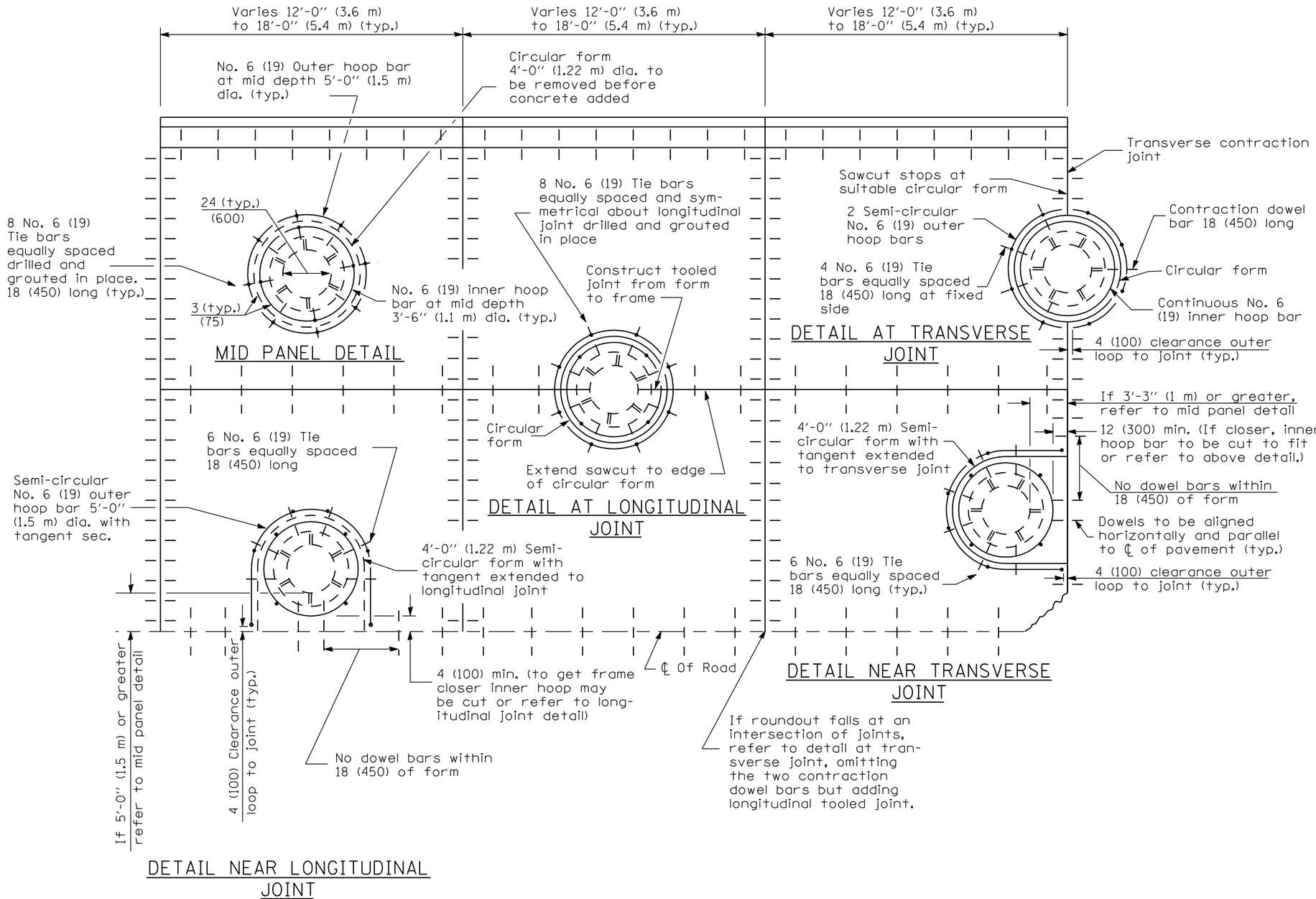

GENERAL NOTES

Transverse joints may be moved to accommodate roundout. Edge of circular joint shall be minimum 24 (600) from transverse joint. Relocated transverse joint shall be continuous from edge of pavement to edge of pavement.

The transverse joint spacing should be adjusted to avoid using the DETAIL AT TRANSVERSE JOINT. If the joint cannot be adjusted to use the DETAIL NEAR TRANSVERSE JOINT, the joint must be in the center of the structure as shown.

Circular form shall be removed prior to drill and grout of tie bars.

Drill and grout is preferred, however tie bars can be poured in place if clearance is provided to outer edge of frame. Maximum 2 (50) clearance.

Shims shall be used to adjust all frames. After adjusting mortar has cured, the shims shall be removed and the voids under the frames filled with nonshrink grout.

Hoop reinforcement shall be one piece construction having a minimum lap length of 24 (600).

All situations not shown and may require combination of details.

WHEN USING CAST IN PLACE:

Frame shall be anchored to the structure to prevent movement during the paving operation.

All dimensions are in inches (millimeters) unless otherwise shown.

Illinois Department of Transportation

PASSED January 1, 2008
ENGINEER OF POLICY AND PROCEDURES
APPROVED January 1, 2008
ENGINEER OF DESIGN AND ENVIRONMENT

ISSUED 1-1-97

DATE	REVISIONS
1-1-08	Switched units to
	English (metric).
1-1-04	Soft converted
	metric reinf.

PCC PAVEMENT ROUNDOUTS

(Sheet 1 of 2)

STANDARD 420111-02

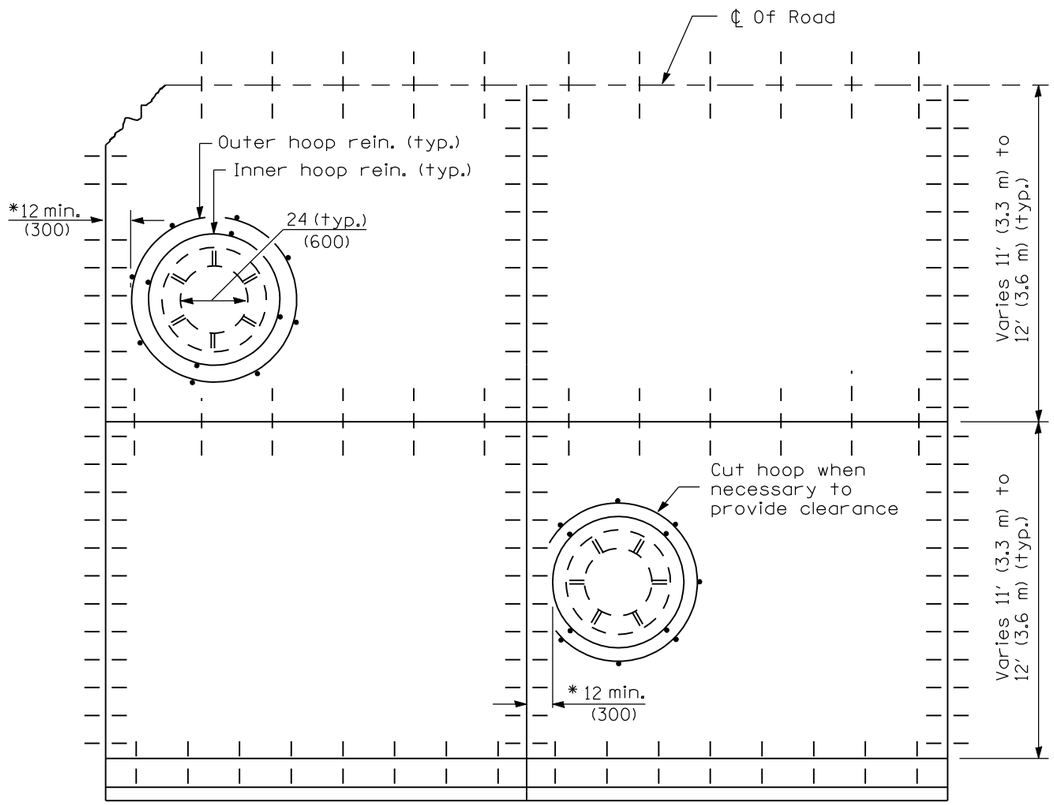

* Less than 12 (300) formed roundout to be used.

CAST IN PLACE DETAIL

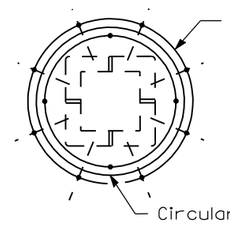

All dimensions same for the majority of circular frame & grates. For larger structures increase hoop bar and circular form diameter by 12 (300) each and add two additional equally spaced tie bars.

ROUNDOUT FOR SQUARE FRAME & GRATE AND MANHOLES

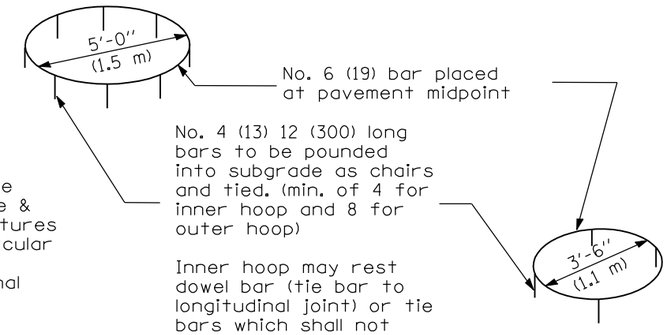

No. 6 (19) bar placed at pavement midpoint

No. 4 (13) 12 (300) long bars to be pounded into subgrade as chairs and tied. (min. of 4 for inner hoop and 8 for outer hoop)

Inner hoop may rest dowel bar (tie bar to longitudinal joint) or tie bars which shall not interfere in the alignment.

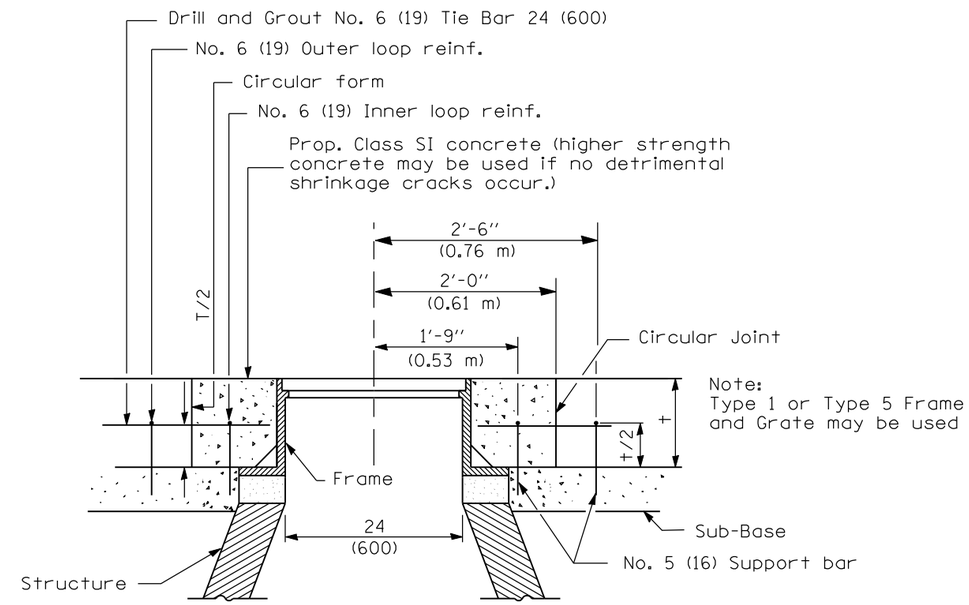

DETAIL OF REINFORCEMENT FOR PAVEMENT ROUNDOUT

Illinois Department of Transportation

PASSED January 1, 2008
ENGINEER OF POLICY AND PROCEDURES

APPROVED January 1, 2008
ENGINEER OF DESIGN AND ENVIRONMENT

ISSUED 1-1-97

PCC PAVEMENT ROUNDOUTS

(Sheet 2 of 2)

STANDARD 420111-02

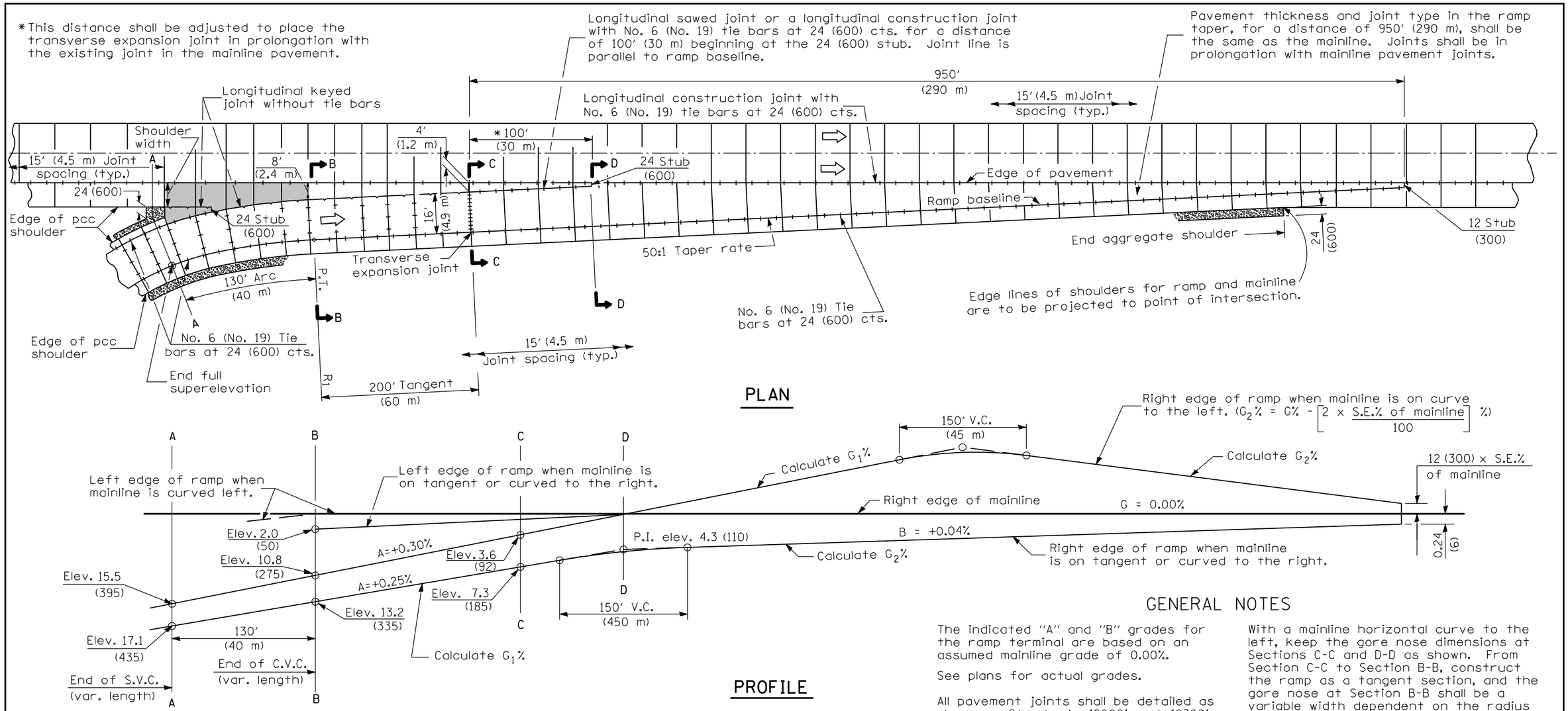

GENERAL NOTES

The indicated "A" and "B" grades for the ramp terminal are based on an assumed mainline grade of 0.00%.

See plans for actual grades.

All pavement joints shall be detailed as shown on Standards 420001 and 483001.

See Standard 483001 for ramp shoulder details.

Between Sections A-A and B-B (shaded area), provide a drainage swale and flush inlet to enhance drainage.

When using grades expressed in %, the grade value shall be divided by 100 to obtain vertical offsets.

When radius R1 is less than 760 ft. (230 m), the acceleration length shall be recalculated.

With a mainline horizontal curve to the left, keep the gore nose dimensions at Sections C-C and D-D as shown. From Section C-C to Section B-B, construct the ramp as a tangent section, and the gore nose at Section B-B shall be a variable width dependent on the radius of the mainline curve. Show a special cross-section on the plans for Section B-B.

With a mainline horizontal curve to the right, keep the gore nose dimensions at Sections D-D, C-C, and B-B as shown, and the edge of the ramp between Sections C-C and B-B is constructed as a compound curve tying Section C-C.

All dimensions are in inches (millimeters) unless otherwise shown.

Illinois Department of Transportation

PASSED January 1, 2008
ENGINEER OF POLICY AND PROCEDURES
APPROVED January 1, 2008
ENGINEER OF DESIGN AND ENVIRONMENT

ISSUED 1-1-97

DATE	REVISIONS
1-1-08	Switched units to
	English (metric).
	Revised Gen. Notes.
1-1-07	Added General Note
	stating when to recalc.
	acceleration length.

ENTRANCE RAMP TERMINAL

(JOINTED PCC RAMP PAVEMENT ADJACENT TO JOINTED PCC MAINLINE PAVEMENT)

(Sheet 1 of 2)

STANDARD 420201-07

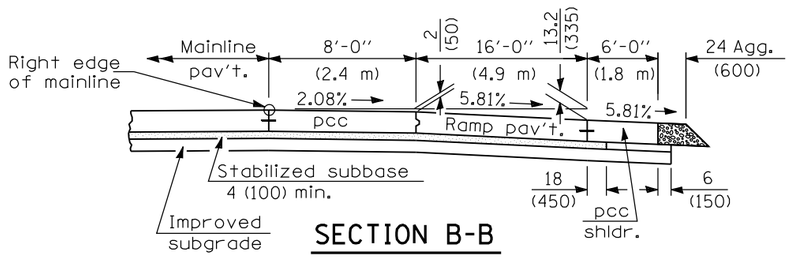

SECTION B-B

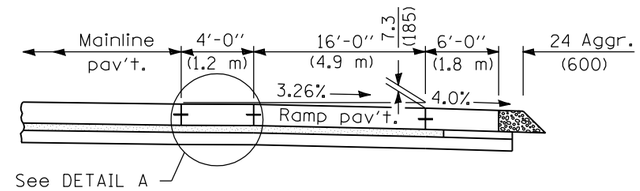

SECTION C-C

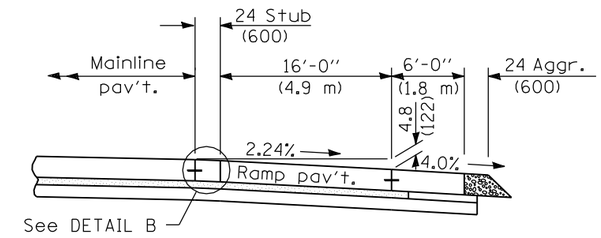

SECTION D-D

CROSS SECTIONS WHEN MAINLINE IS ON TANGENT OR CURVED TO THE RIGHT

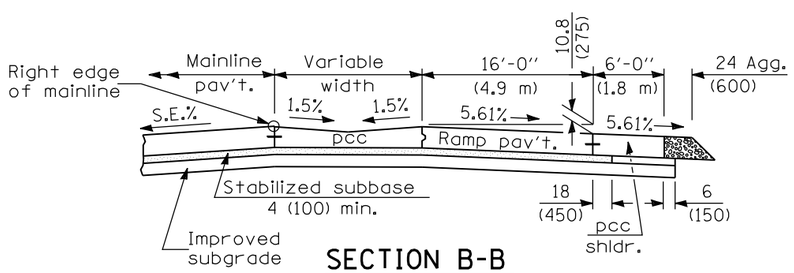

SECTION B-B

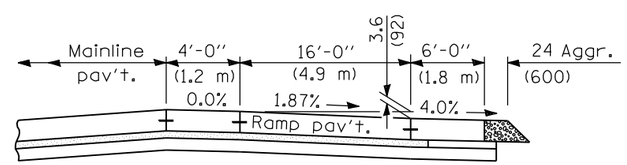

SECTION C-C

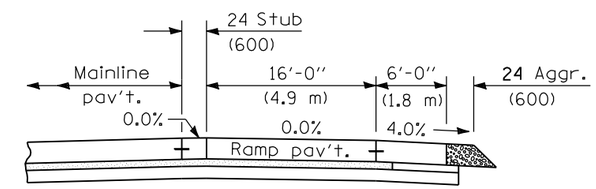

SECTION D-D

CROSS SECTIONS WHEN MAINLINE IS CURVED TO THE LEFT

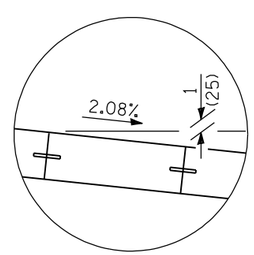

DETAIL A

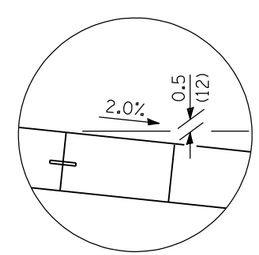

DETAIL B

Illinois Department of Transportation

PASSED January 1, 2008
ENGINEER OF POLICY AND PROCEDURES

APPROVED January 1, 2008
ENGINEER OF DESIGN AND ENVIRONMENT

ISSUED 1-1-97

ENTRANCE RAMP TERMINAL

(JOINTED PCC RAMP PAVEMENT ADJACENT TO JOINTED PCC MAINLINE PAVEMENT)

(Sheet 2 of 2)

STANDARD 420201–07

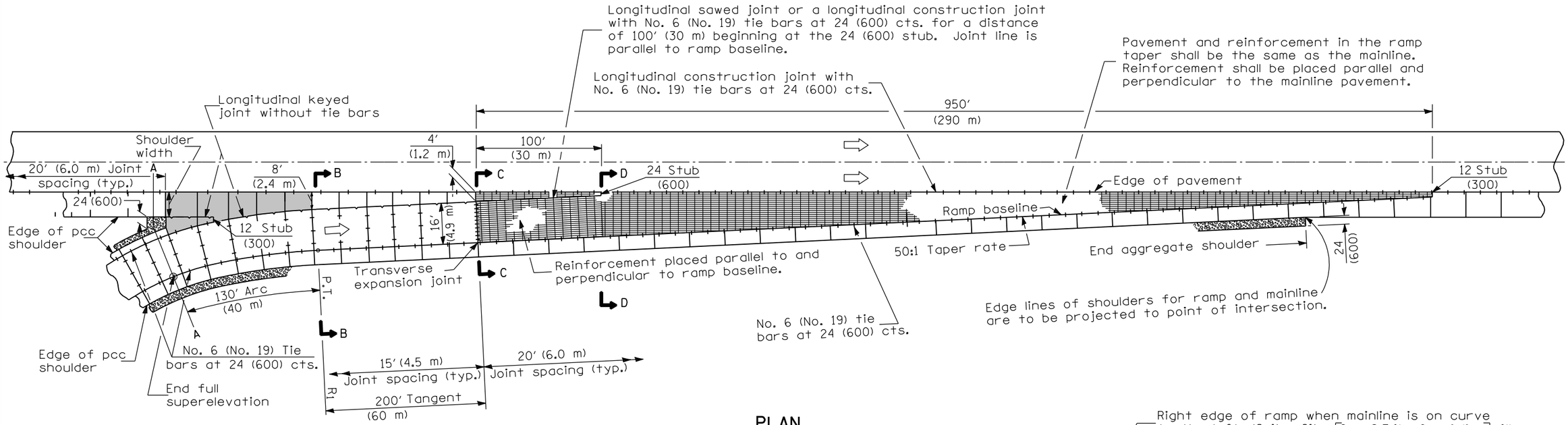

PLAN

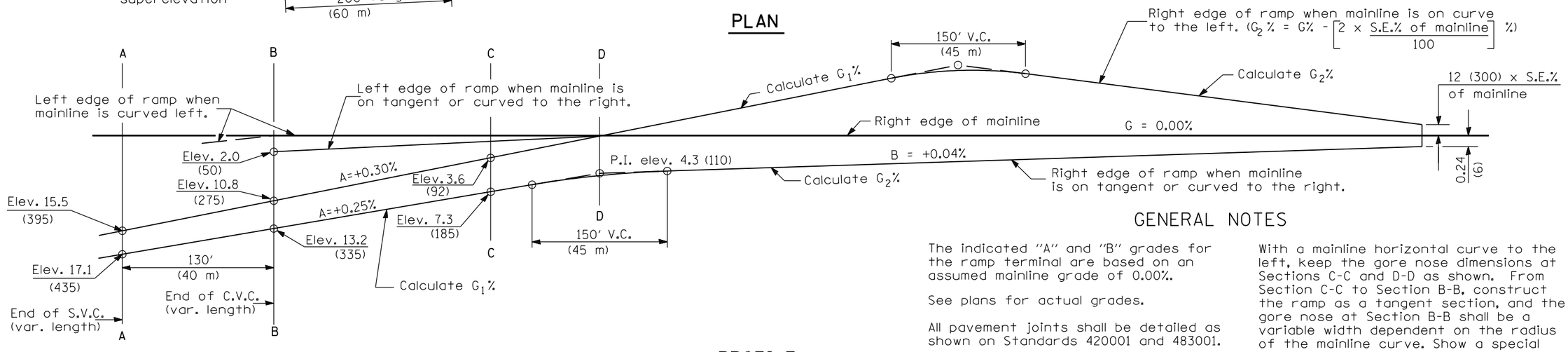

PROFILE

GENERAL NOTES

The indicated "A" and "B" grades for the ramp terminal are based on an assumed mainline grade of 0.00%.

See plans for actual grades.

All pavement joints shall be detailed as shown on Standards 420001 and 483001.

See Standard 483001 for ramp shoulder details.

Between Sections A-A and B-B (shaded area), provide a drainage swale and flush inlet to enhance drainage.

When using grades expressed in %, the grade value shall be divided by 100 to obtain vertical offsets.

When radius R1 is less than 760 ft (230 m), the acceleration length of the ramp shall be recalculated.

With a mainline horizontal curve to the left, keep the gore nose dimensions at Sections C-C and D-D as shown. From Section C-C to Section B-B, construct the ramp as a tangent section, and the gore nose at Section B-B shall be a variable width dependent on the radius of the mainline curve. Show a special cross-section on the plans for Section B-B.

With a mainline horizontal curve to the right, keep the gore nose dimensions at Sections D-D, C-C, and B-B as shown, and the edge of the ramp between Sections C-C and B-B is constructed as a compound curve tying Section C-C.

All dimensions are in inches (millimeters) unless otherwise shown.

Illinois Department of Transportation

PASSED January 1, 2008
ENGINEER OF POLICY AND PROCEDURES
APPROVED January 1, 2008
ENGINEER OF DESIGN AND ENVIRONMENT

ISSUED 1-1-97

DATE	REVISIONS
1-1-08	Switched units to
	English (metric).
1-1-07	Added General Note
	stating when to recalc.
	acceleration length

ENTRANCE RAMP TERMINAL

(JOINTED PCC RAMP PAVEMENT ADJACENT TO CRC MAINLINE PAVEMENT)

(Sheet 1 of 2)

STANDARD 420206–08

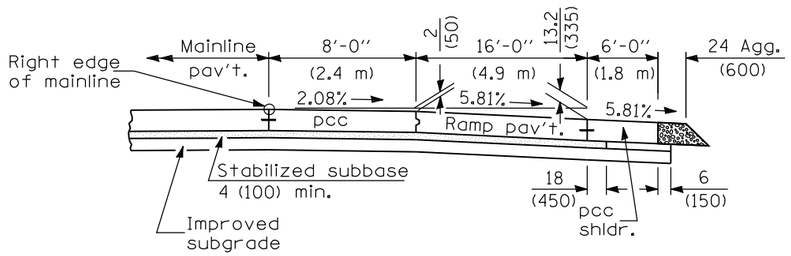

SECTION B-B

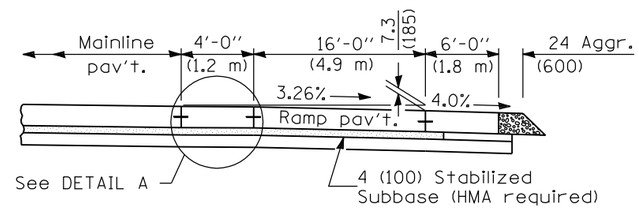

SECTION C-C

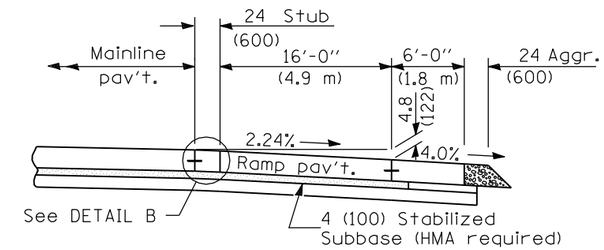

SECTION D-D

CROSS SECTIONS WHEN MAINLINE IS ON TANGENT OR CURVED TO THE RIGHT

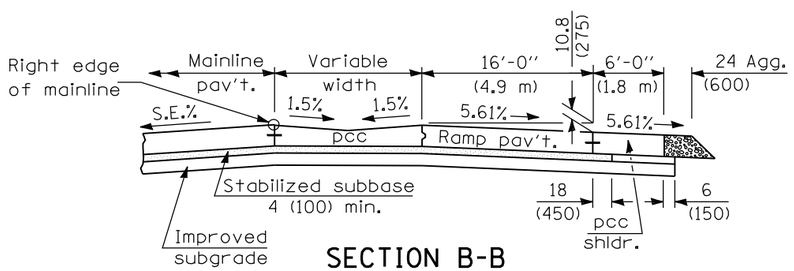

SECTION B-B

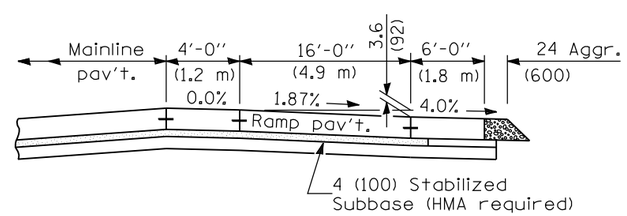

SECTION C-C

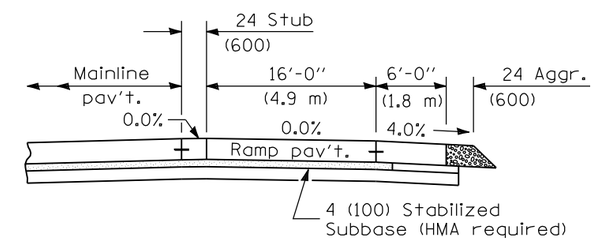

SECTION D-D

CROSS SECTIONS WHEN MAINLINE IS CURVED TO THE LEFT

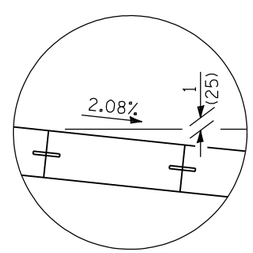

DETAIL A

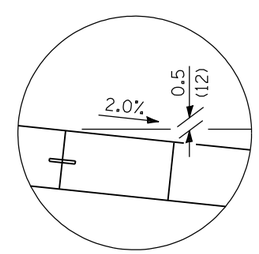

DETAIL B

Illinois Department of Transportation

PASSED January 1, 2008
ENGINEER OF POLICY AND PROCEDURES

APPROVED January 1, 2008
ENGINEER OF DESIGN AND ENVIRONMENT

ISSUED 1-1-97

ENTRANCE RAMP TERMINAL

(JOINTED PCC RAMP PAVEMENT ADJACENT TO CRC MAINLINE PAVEMENT)

(Sheet 2 of 2)

STANDARD 420206-08

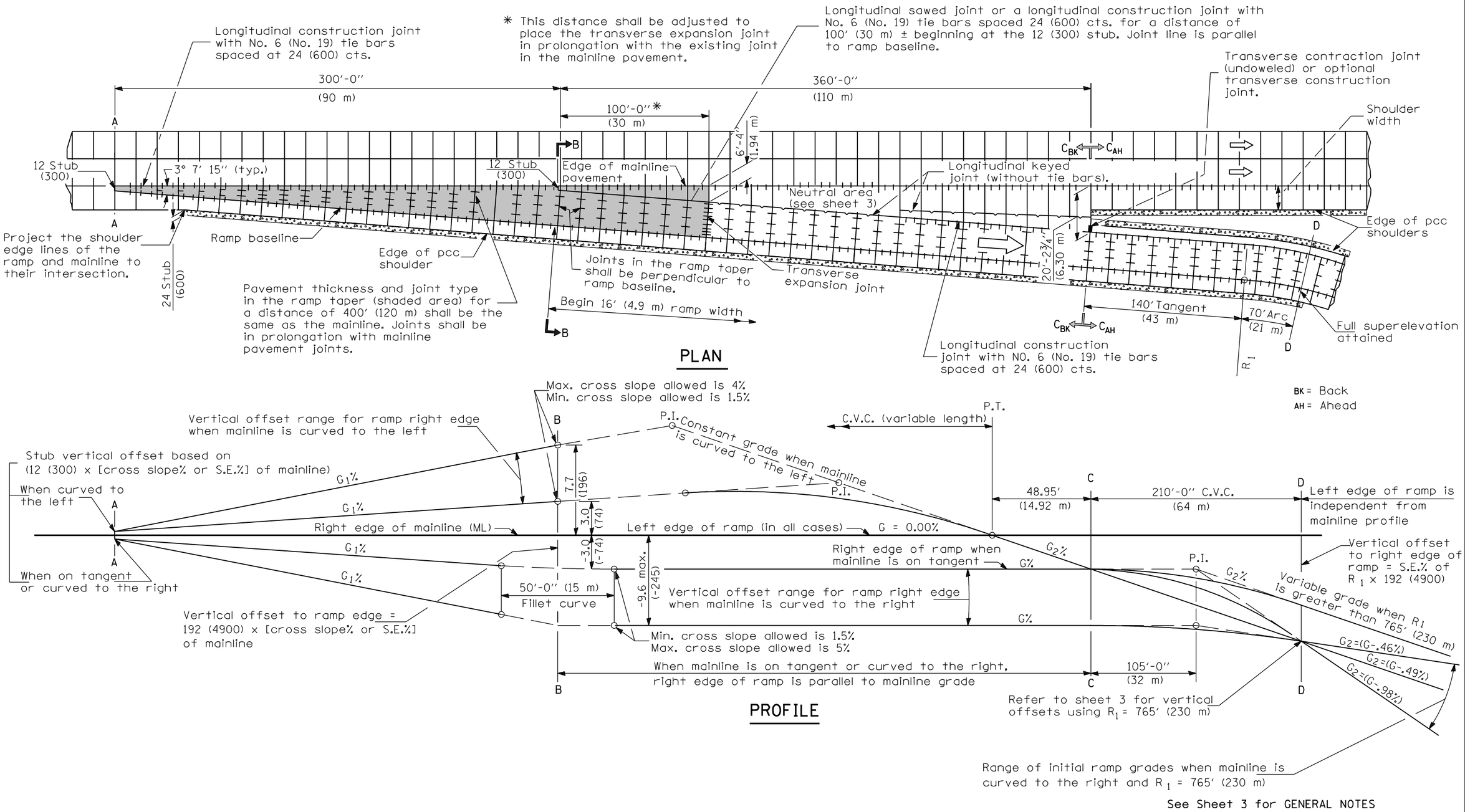

See Sheet 3 for GENERAL NOTES

Illinois Department of Transportation

PASSED January 1, 2008
ENGINEER OF POLICY AND PROCEDURES
APPROVED January 1, 2008
ENGINEER OF DESIGN AND ENVIRONMENT

ISSUED 1-1-97

DATE	REVISIONS
1-1-08	Switched units to English (metric).
1-1-04	Minor corrections of joint information.

EXIT RAMP TERMINAL

(JOINTED PCC RAMP PAVEMENT ADJACENT TO JOINTED PCC MAINLINE PAVEMENT)

(Sheet 1 of 3)

STANDARD 420301–04

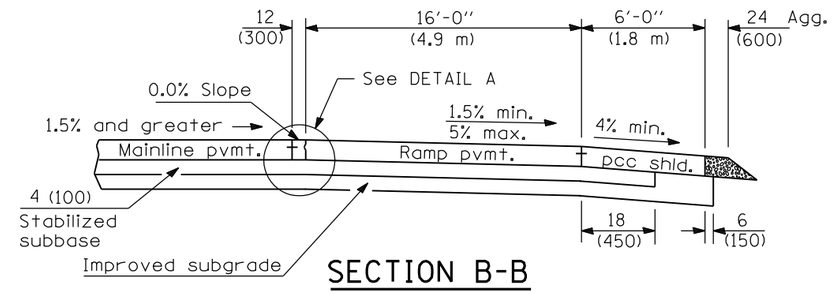

SECTION B-B

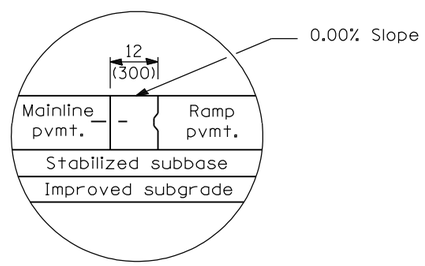

DETAIL A

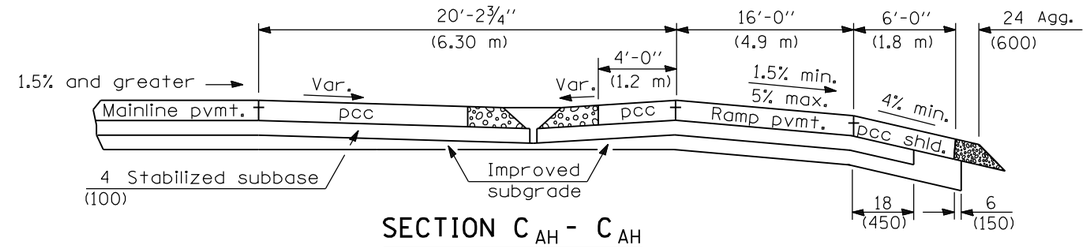

SECTION C_{AH} - C_{AH}

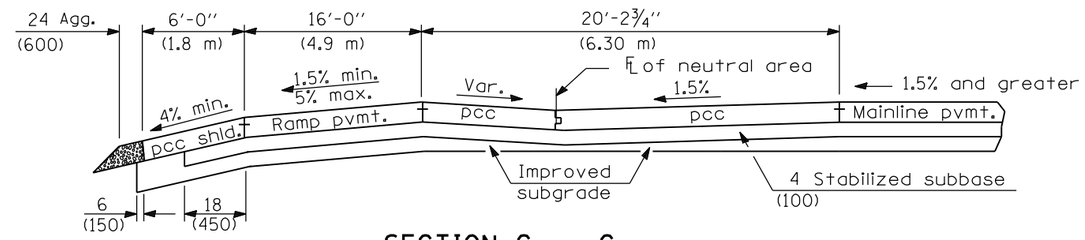

SECTION C_{BK} - C_{BK}

BK = Back
AH = Ahead

WHEN MAINLINE IS ON TANGENT OR CURVED TO THE RIGHT

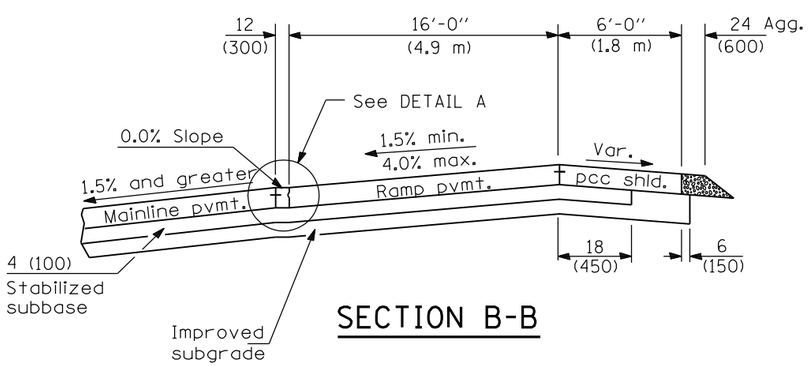

SECTION B-B

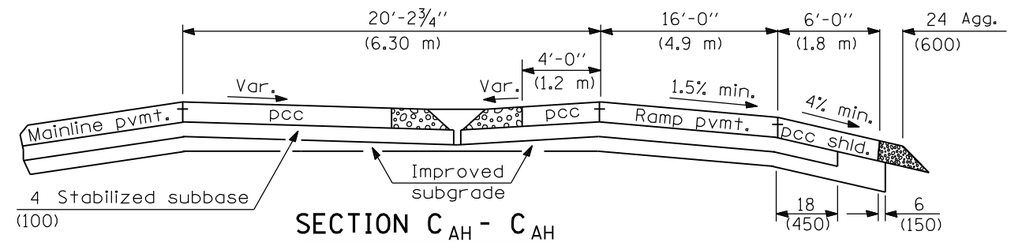

SECTION C_{AH} - C_{AH}

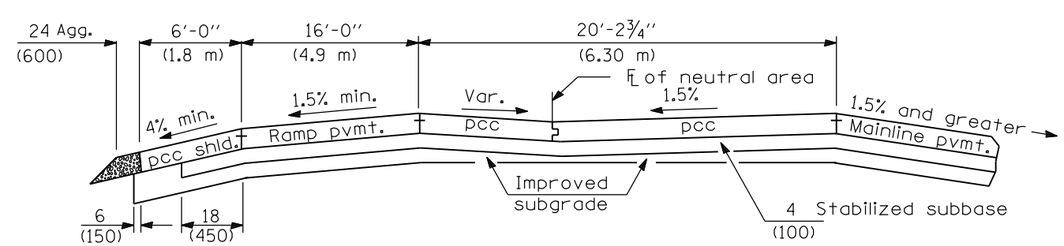

SECTION C_{BK} - C_{BK}

See Sheet 3 for GENERAL NOTES

WHEN MAINLINE IS CURVED TO THE LEFT

Illinois Department of Transportation

PASSED January 1, 2008
ENGINEER OF POLICY AND PROCEDURES
APPROVED January 1, 2008
ENGINEER OF DESIGN AND ENVIRONMENT

ISSUED 1-1-97

EXIT RAMP TERMINAL

(JOINTED PCC RAMP PAVEMENT
ADJACENT TO JOINTED PCC MAINLINE PAVEMENT)
(Sheet 2 of 3)

STANDARD 420301-04

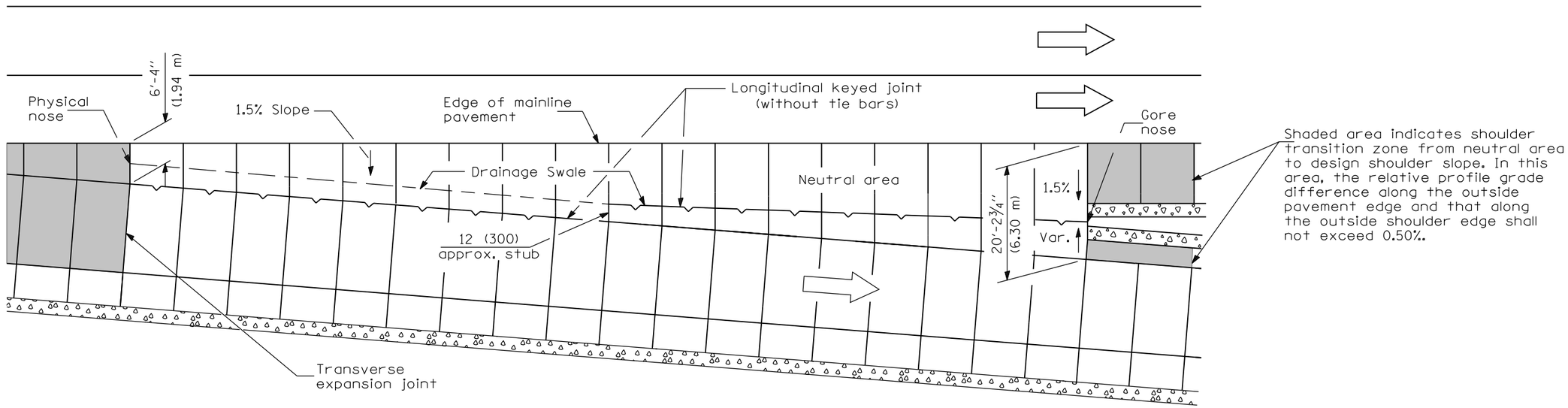

DETAILS FOR DRAINAGE IN NEUTRAL AREA

Vertical offsets in inches for right ① edge of ramp, when R_1 = 765'			
Sections	Mainline on Tangent	Mainline Curved Right	Mainline Curved Left
A	- 0.18	S.E. % ML x 12	S.E. % ML x 12 ②
B	- 3.0	S.E. % ML x 192	S.E. % ML x 192 ②
C	- 3.0	S.E. % ML x 192	- 3.0
D	- 15.4	- 15.4	- 15.4

① Vertical offsets in mm for right edge of ramp, when R_1 = 230 m			
Sections	Mainline on Tangent	Mainline Curved Right	Mainline Curved Left
A	- 5	S.E.% ML x 300	S.E.% ML x 300 ②
B	- 74	S.E.% ML x 4900	S.E.% ML x 4900 ②
C	- 74	S.E. % ML x 4900	- 74
D	- 392	- 392	- 392

① Vertical offset values are calculated and based on the right edge of mainline pavement at 0.0 % grade.

② The vertical offsets of these points are above the mainline pavement and lie on an upgrade in relationship to the mainline grade.

③ S.E.=Superelevation Rate

GENERAL NOTES

The initial ramp grade (G_2) is based on the line generated through the PI that is 105' (32 m) past Section C-C and the point created by the vertical offset at Section D-D.

See plans for actual grades.

All pavement joints shall be detailed as shown on Standards 420001 and 483001.

See Standard 483001 for ramp shoulder details.

In the neutral area, provide a swale and flush inlet to enhance drainage.

When using grades expressed in %, the grade values shall be divided by 100 to obtain vertical offsets.

Where an exit ramp terminal is proposed adjacent to a mainline horizontal curve, construct the edge of the terminal by using offset widths, and for the terminal segment downstream from Section C-C to R_1, construct the ramp as a 141' (43 m) tangent section.

All dimensions are in inches (millimeters) unless otherwise shown.

Illinois Department of Transportation

PASSED January 1, 2008
ENGINEER OF POLICY AND PROCEDURES
APPROVED January 1, 2008
ENGINEER OF DESIGN AND ENVIRONMENT

ISSUED 1-1-97

EXIT RAMP TERMINAL

(JOINTED PCC RAMP PAVEMENT ADJACENT TO JOINTED PCC MAINLINE PAVEMENT)

(Sheet 3 of 3)

STANDARD 420301-04

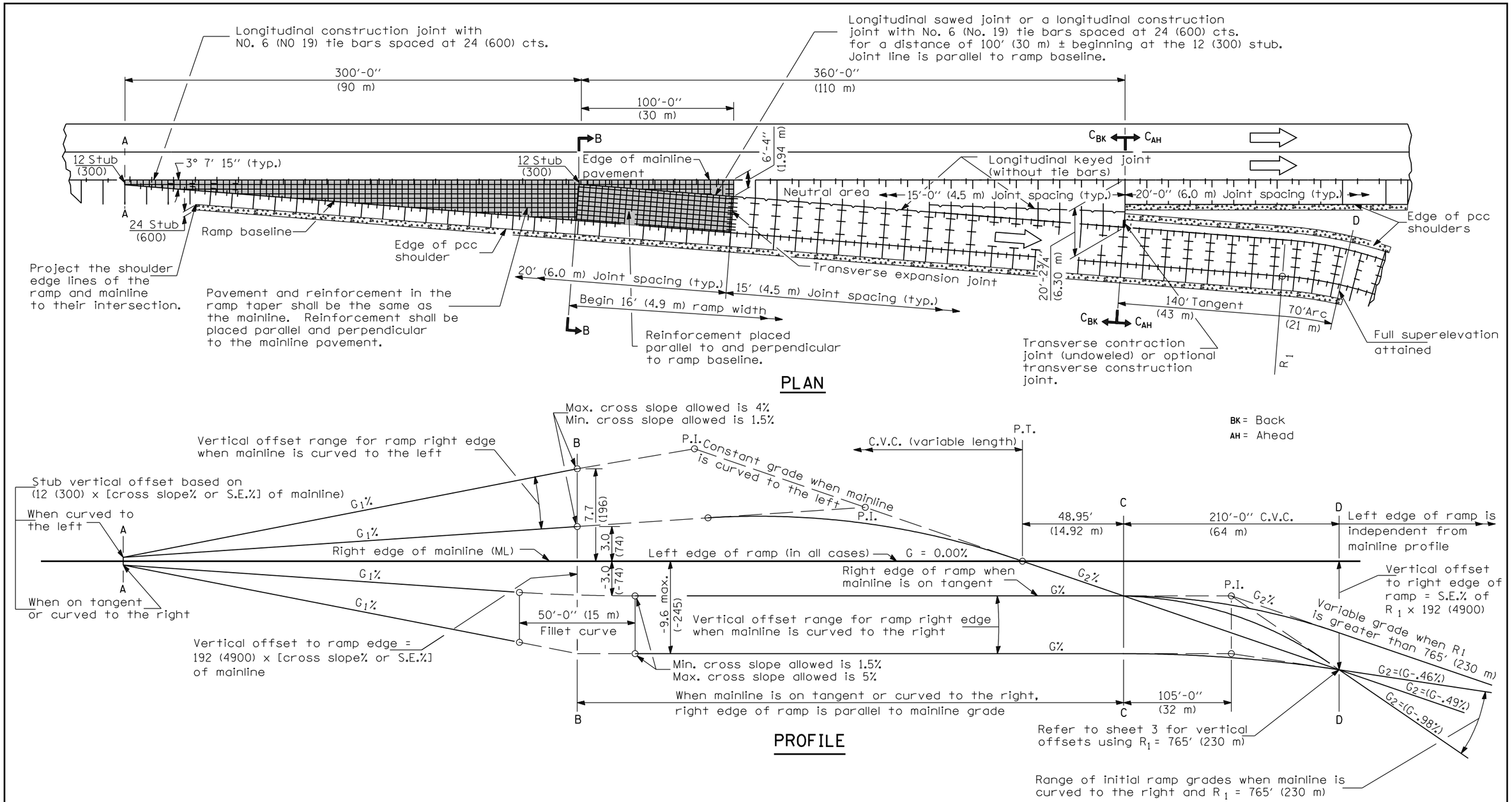

See Sheet 3 for GENERAL NOTES

Illinois Department of Transportation

PASSED January 1, 2008
ENGINEER OF POLICY AND PROCEDURES

APPROVED January 1, 2008
ENGINEER OF DESIGN AND ENVIRONMENT

ISSUED 1-1-97

DATE	REVISIONS
1-1-08	Switched units to
	English (metric).
1-1-04	Minor corrections
	of joint information.

EXIT RAMP TERMINAL

(JOINTED PCC RAMP PAVEMENT ADJACENT TO CRC MAINLINE PAVEMENT)

(Sheet 1 of 3)

STANDARD 420306–06

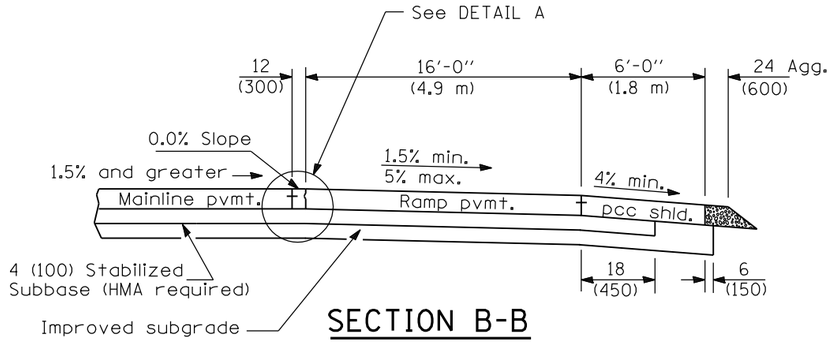

SECTION B-B

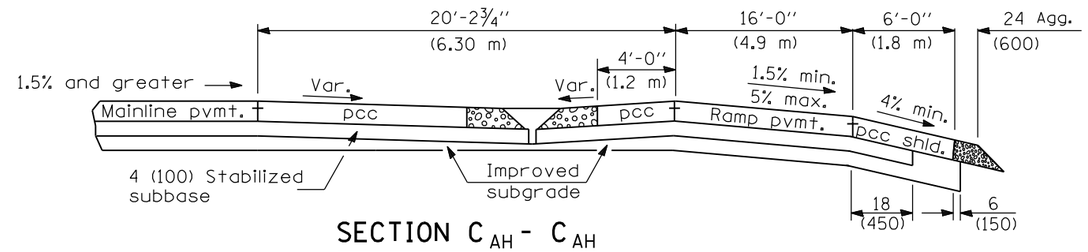

SECTION C_{AH} - C_{AH}

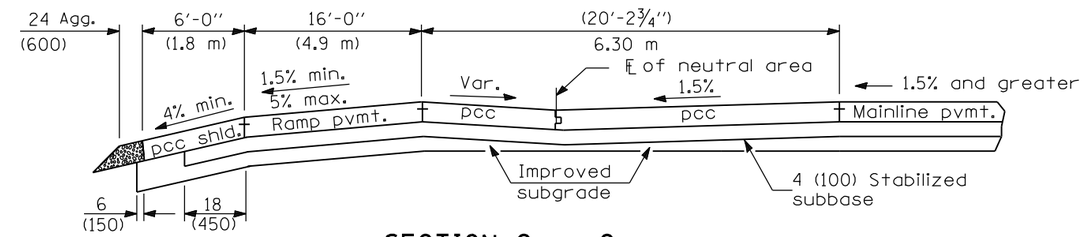

SECTION C_{BK} - C_{BK}

BK = Back
AH = Ahead

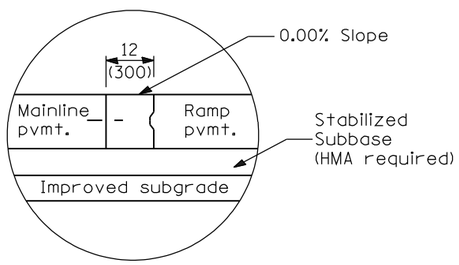

DETAIL A

WHEN MAINLINE IS ON TANGENT OR CURVED TO THE RIGHT

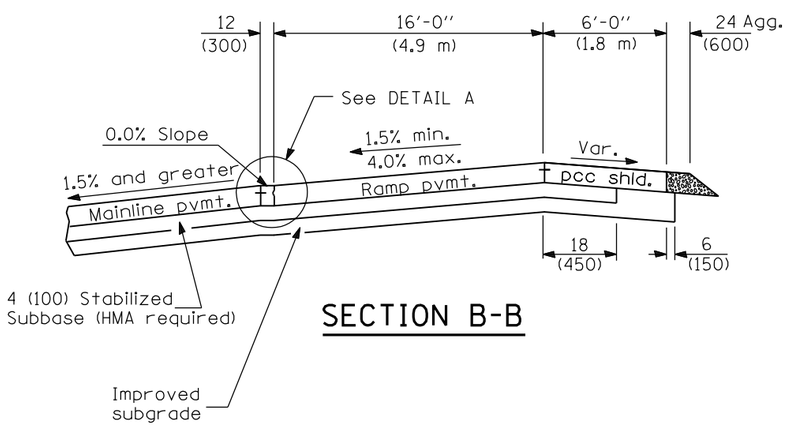

SECTION B-B

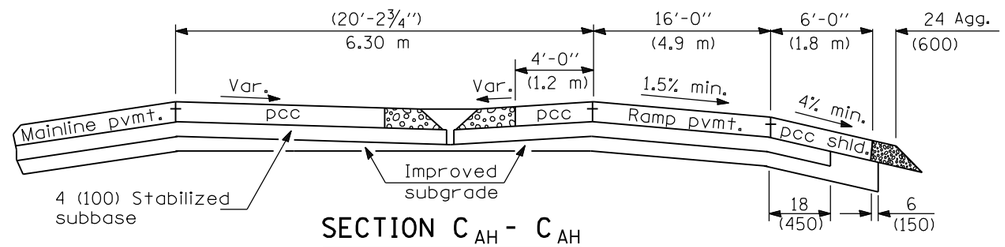

SECTION C_{AH} - C_{AH}

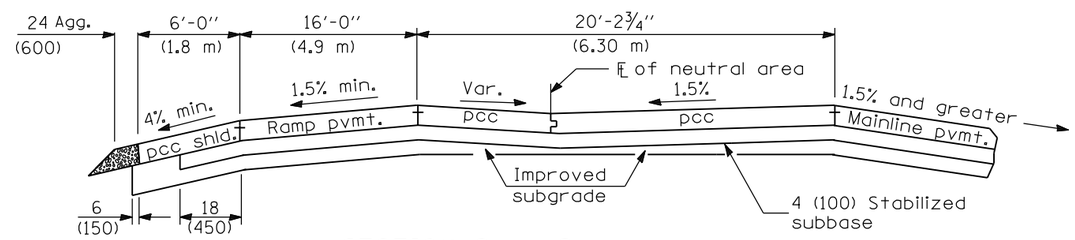

SECTION C_{BK} - C_{BK}

See Sheet 3 for GENERAL NOTES

WHEN MAINLINE IS CURVED TO THE LEFT

Illinois Department of Transportation

PASSED January 1, 2008
ENGINEER OF POLICY AND PROCEDURES
APPROVED January 1, 2008
ENGINEER OF DESIGN AND ENVIRONMENT

ISSUED 1-1-97

EXIT RAMP TERMINAL

(JOINTED PCC RAMP PAVEMENT
ADJACENT TO CRC MAINLINE PAVEMENT)

(Sheet 2 of 3)

STANDARD 420306–06

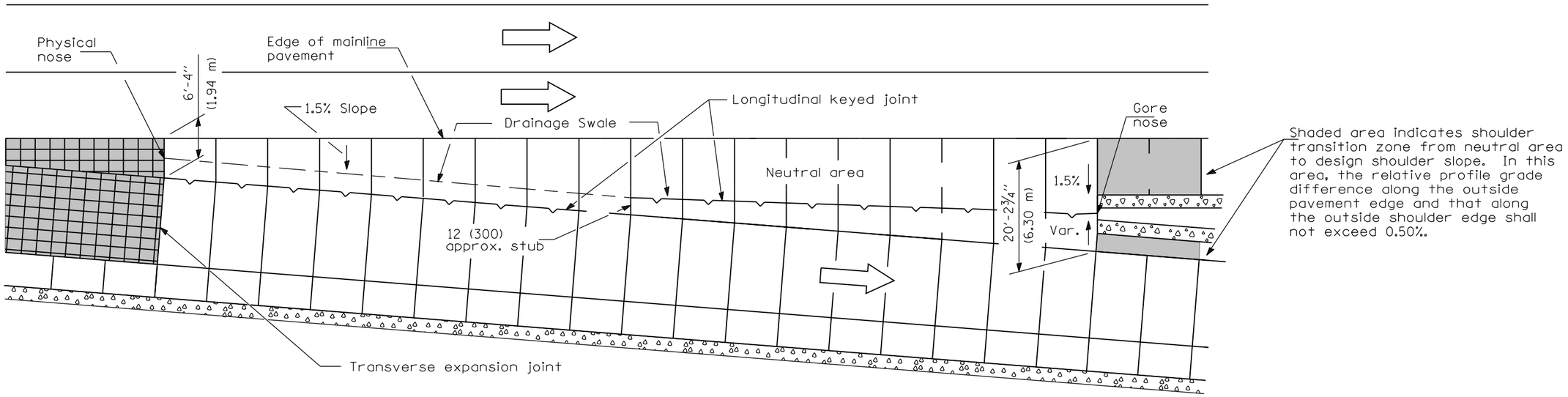

DETAILS FOR DRAINAGE IN NEUTRAL AREA

Vertical offsets in inches for right ① edge of ramp, when R_1 = 765′			
Sections	Mainline on Tangent	Mainline Curved Right	Mainline Curved Left
A	- 0.18	S.E. % ML x 12	S.E. % ML x 12 ②
B	- 3.0	S.E. % ML x 192	S.E. % ML x 192 ②
C	- 3.0	S.E. % ML x 192	- 3.0
D	- 15.4	- 15.4	- 15.4

① Vertical offsets in mm for right edge of ramp, when R_1 = 230 m			
Sections	Mainline on Tangent	Mainline Curved Right	Mainline Curved Left
A	- 5	S.E.% ML x 300	S.E.% ML x 300 ②
B	- 74	S.E.% ML x 4900	S.E.% ML x 4900 ②
C	- 74	S.E. % ML x 4900	- 74
D	- 392	- 392	- 392

① Vertical offset values are calculated and based on the right edge of mainline pavement at 0.0 % grade.

② The vertical offsets of these points are above the mainline pavement and lie on an upgrade in relationship to the mainline grade.

③ S.E. = Superelevation Rate

GENERAL NOTES

The initial ramp grade (G_2) is based on the line generated through the PI that is 105′ (32 m) past Section C-C and the point created by the vertical offset at Section D-D.

See plans for actual grades.

All pavement joints shall be detailed as shown on Standards 420001 and 483001.

See Standard 483001 for ramp shoulder details.

In the neutral area, provide a swale and flush inlet to enhance drainage.

When using grades expressed in %, the grade values shall be divided by 100 to obtain vertical offsets.

Where an exit ramp terminal is proposed adjacent to a mainline horizontal curve, construct the edge of the terminal by using offset widths, and for the terminal segment downstream from Section C-C to R_1, construct the ramp as a 141′ (43 m) tangent section.

All dimensions are in inches (millimeters) unless otherwise shown.

Illinois Department of Transportation

PASSED January 1, 2008
ENGINEER OF POLICY AND PROCEDURES
APPROVED January 1, 2008
ENGINEER OF DESIGN AND ENVIRONMENT

ISSUED 1-1-97

EXIT RAMP TERMINAL

(JOINTED PCC RAMP PAVEMENT ADJACENT TO CRC MAINLINE PAVEMENT)

(Sheet 3 of 3)

STANDARD 420306–06

NEW CONSTRUCTION

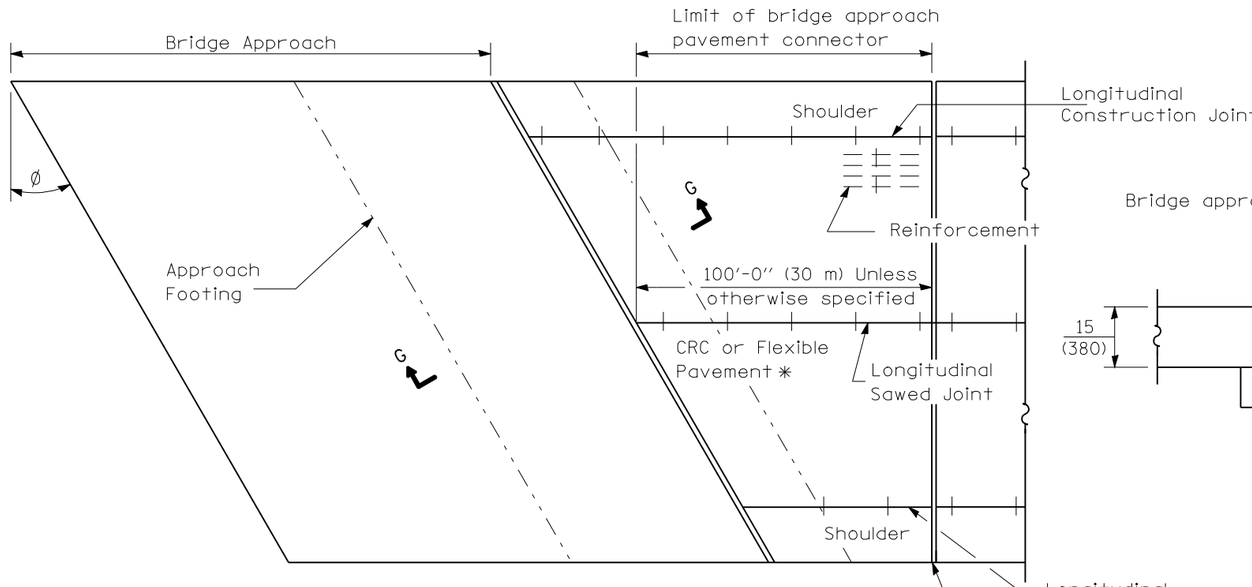

PLAN - WITH SKEW

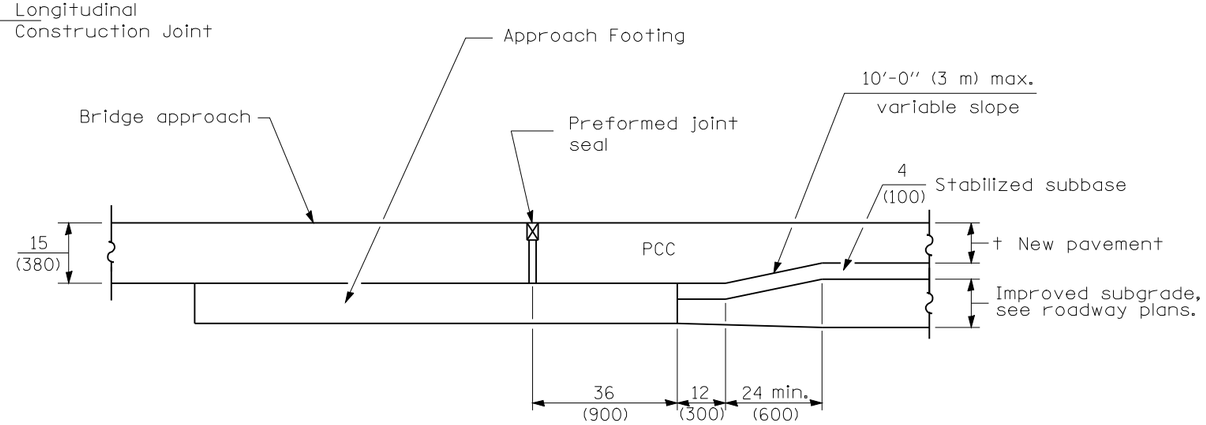

SECTION G-G - RIGID PAVEMENT

Rigid Pavement only:

Wide Flange Beam Terminal Joint (See DETAIL AT BEAM - Standard 421101 or 421106) or 2 (50) Trans. Exp. Joint as detailed on Standard 420001.

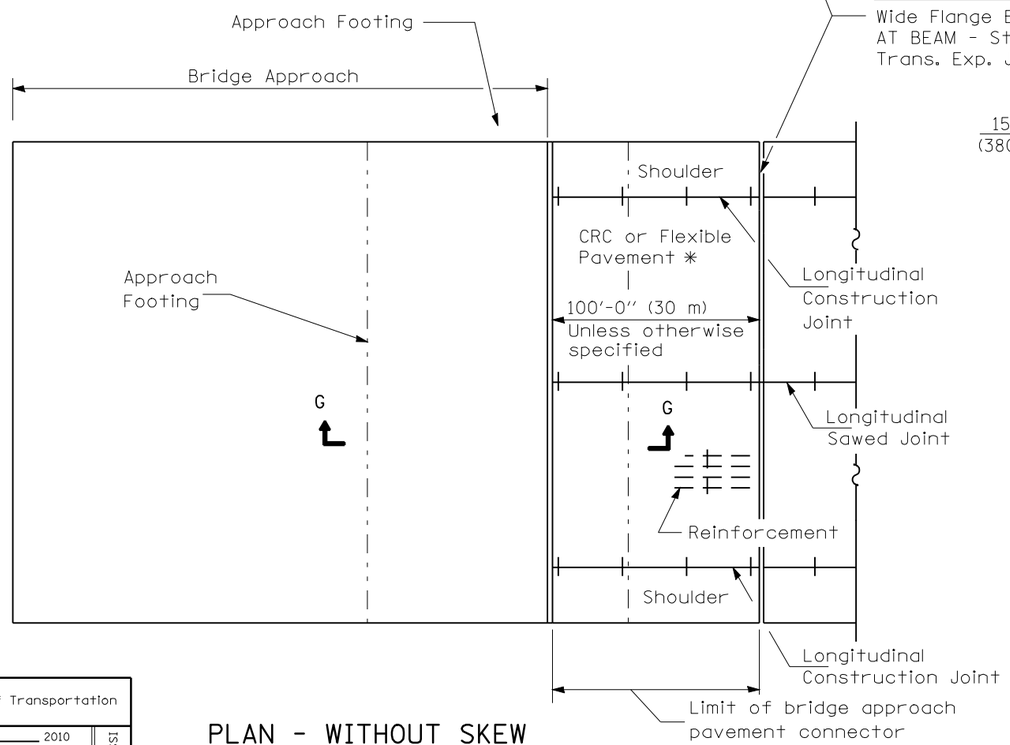

PLAN - WITHOUT SKEW

✱ Omit Reinforcement, tie bars and Long. sawed Jt. for Flexible Pavement.

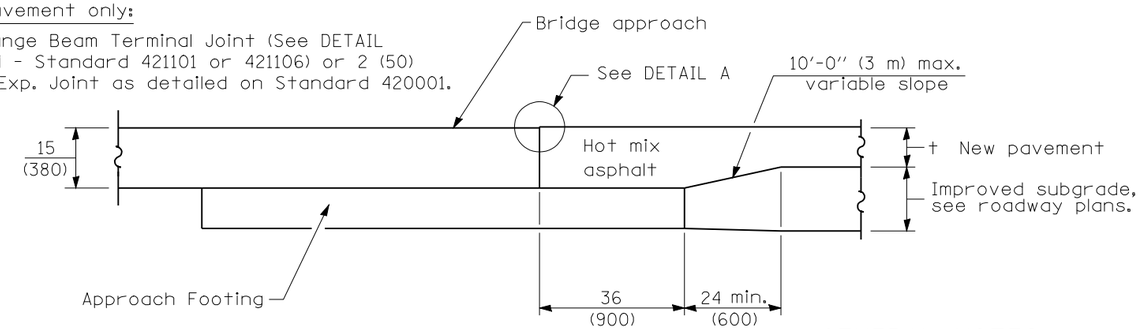

SECTION G-G - FLEXIBLE PAVEMENT

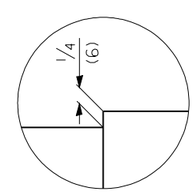

DETAIL A

GENERAL NOTES

THICKNESS-"t"=Thickness of Pavement.

See Standard 421001 for reinforcement details not shown.

See Standard 420001 for joint details not shown.

See plans for details of bridge approach, approach footing and preformed joint seal.

All dimensions are in inches (millimeters) unless otherwise shown.

Illinois Department of Transportation

APPROVED January 1, 2010
ENGINEER OF POLICY AND PROCEDURES

APPROVED January 1, 2010
ENGINEER OF DESIGN AND ENVIRONMENT

ISSUED 1-1-97

DATE	REVISIONS
1-1-10	Added reference to
	improved subgrade.
1-1-09	Completely revised std.
	Moved reinf. and details
	to base sheet.

BRIDGE APPROACH PAVEMENT CONNECTOR

(Sheet 1 of 2)

STANDARD 420401-08

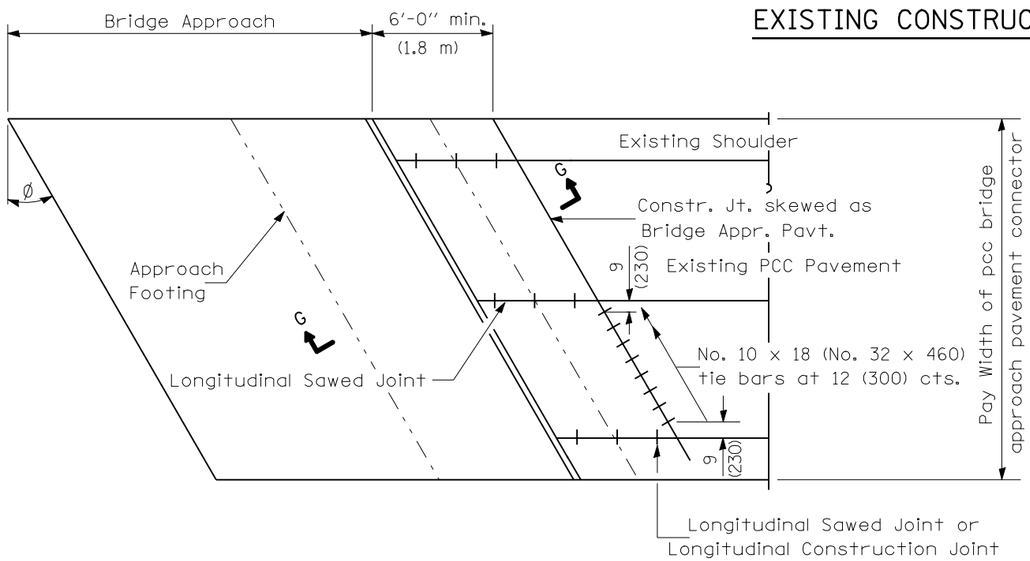

BRIDGE APPROACH PAVEMENT CONNECTOR (PCC)

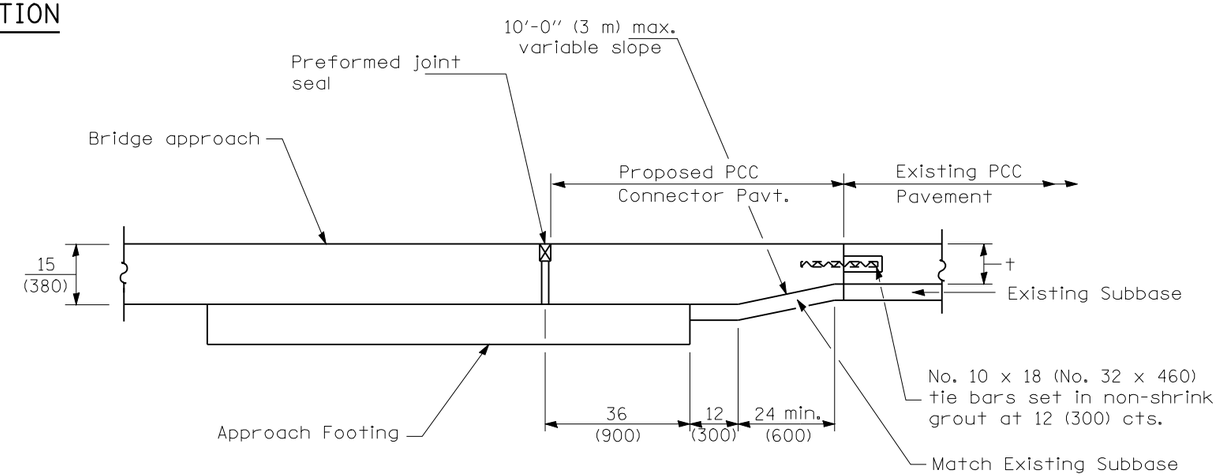

SECTION G-G - RIGID PAVEMENT

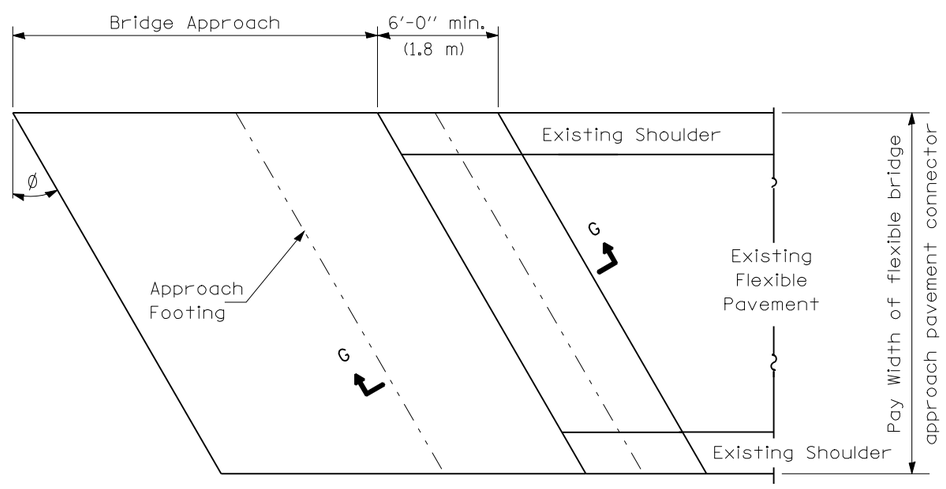

BRIDGE APPROACH PAVEMENT CONNECTOR (FLEXIBLE)

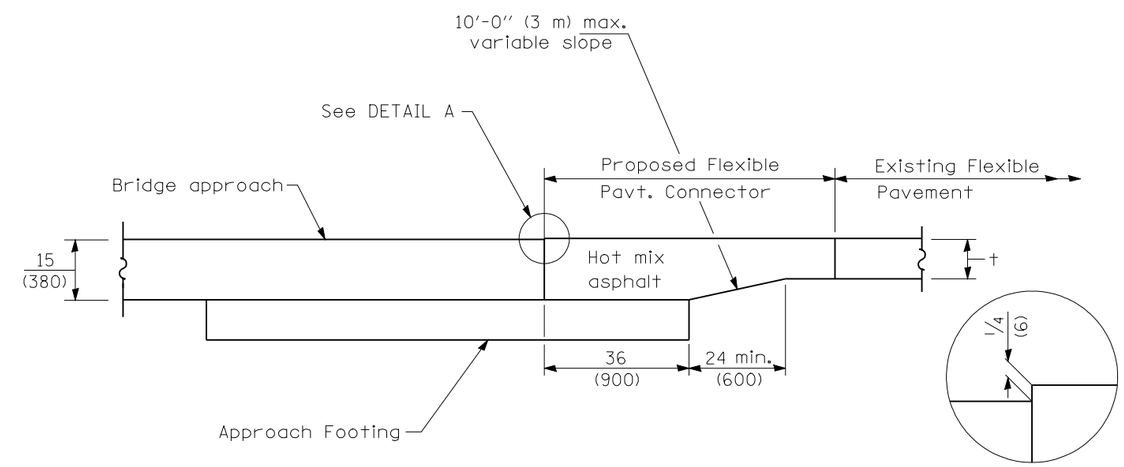

SECTION G-G - FLEXIBLE PAVEMENT

DETAIL A

Illinois Department of Transportation

APPROVED January 1, 2010
ENGINEER OF POLICY AND PROCEDURES

APPROVED January 1, 2010
ENGINEER OF DESIGN AND ENVIRONMENT

ISSUED 1-1-97

BRIDGE APPROACH
PAVEMENT CONNECTOR
(Sheet 2 of 2)

STANDARD 420401-08

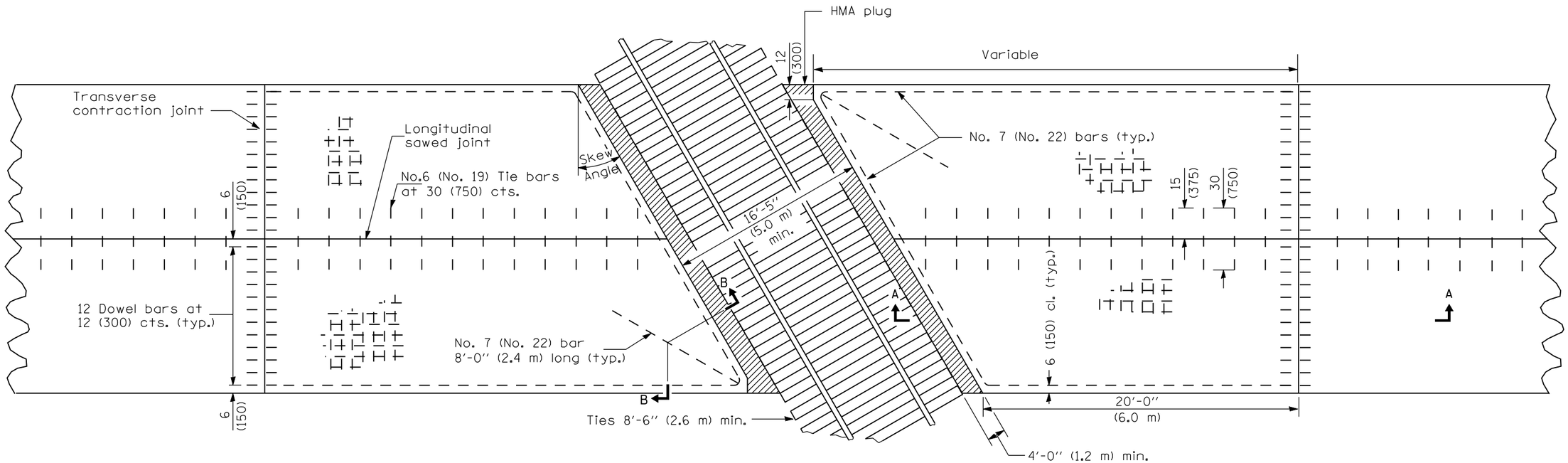

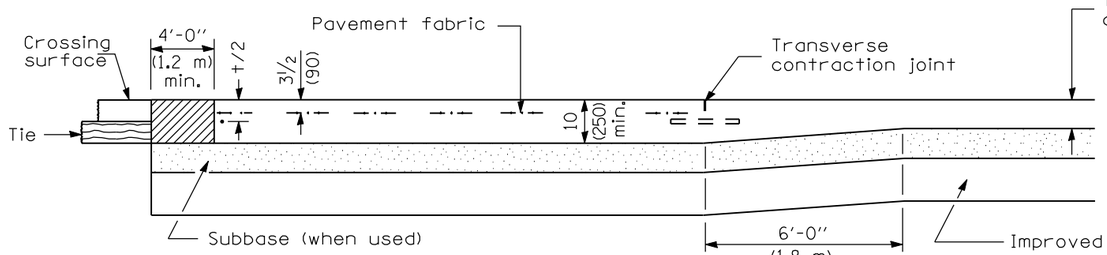

SECTION A-A

(FOR PCC PAVEMENT)

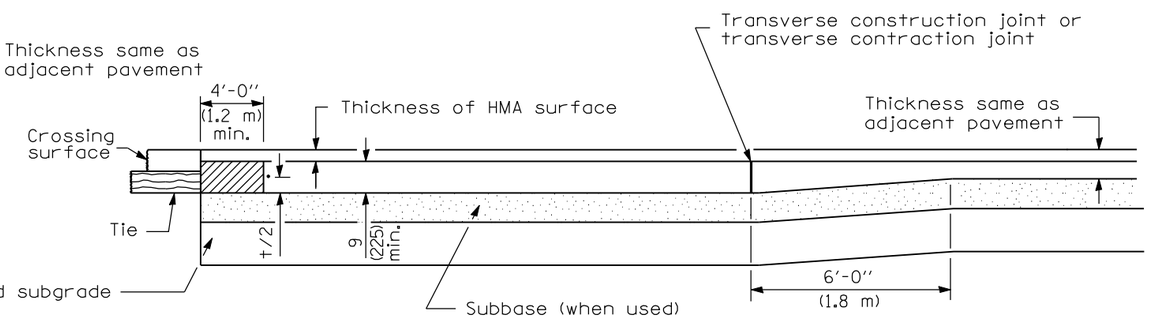

SECTION A-A

(FOR PCC BASE COURSE WITH HMA SURFACE)

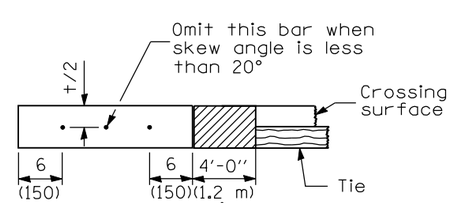

SECTION B-B

GENERAL NOTES

See Standard 420001 for joint details not shown.

All dimensions are in inches (millimeters) unless otherwise shown.

Illinois Department of Transportation

PASSED January 1, 2008

ENGINEER OF POLICY AND PROCEDURES

APPROVED January 1, 2008

ENGINEER OF DESIGN AND ENVIRONMENT

ISSUED 1-1-97

DATE	REVISIONS
1-1-08	Switched units to
	English (metric).
1-1-07	Switched to Hot-Mix
	Asphalt (HMA)
	terminology.

PCC PAVEMENT AND PCC BASE COURSE ADJACENT TO RAILROAD GRADE CROSSING

STANDARD 420501-04

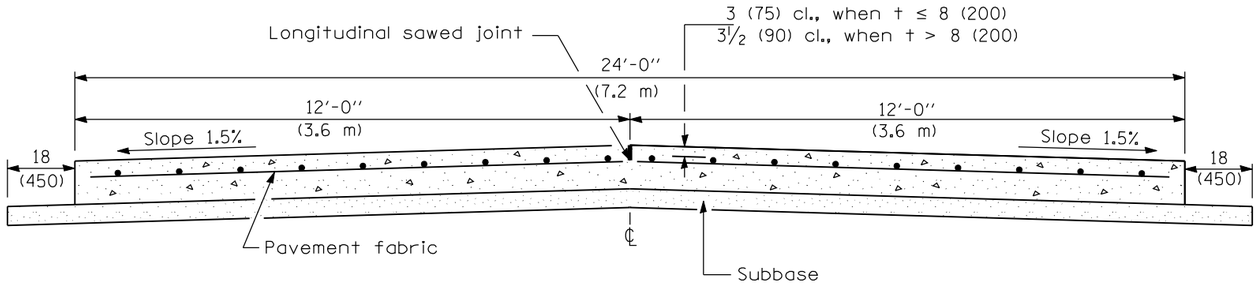

SECTION A-A

(TYPICAL 2-LANE WITH SHOULDERS)

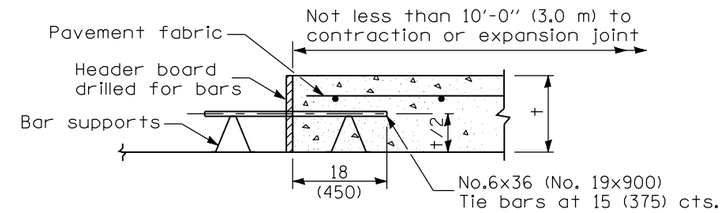

TRANSVERSE CONSTRUCTION JOINT

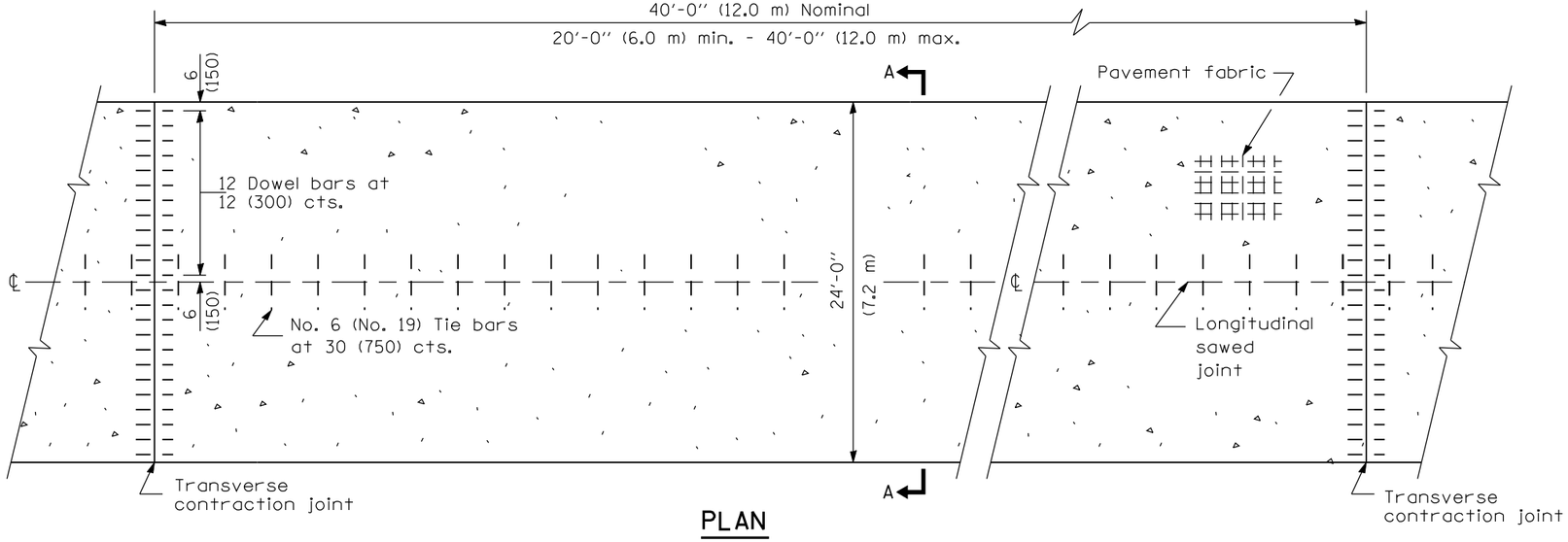

PLAN

GENERAL NOTES

See Standard 420001 for details not shown.

See Standard 420701 for pavement fabric details.

All dimensions are in inches (millimeters) unless otherwise shown.

Illinois Department of Transportation

PASSED January 1, 2008
ENGINEER OF POLICY AND PROCEDURES

APPROVED January 1, 2008
ENGINEER OF DESIGN AND ENVIRONMENT

ISSUED 1-1-97

DATE	REVISIONS
1-1-08	Switched units to English (metric).
8-1-05	Added bar supports to transverse constr. joint detail.

24' (7.2 m) PCC PAVEMENT

STANDARD 420601-05

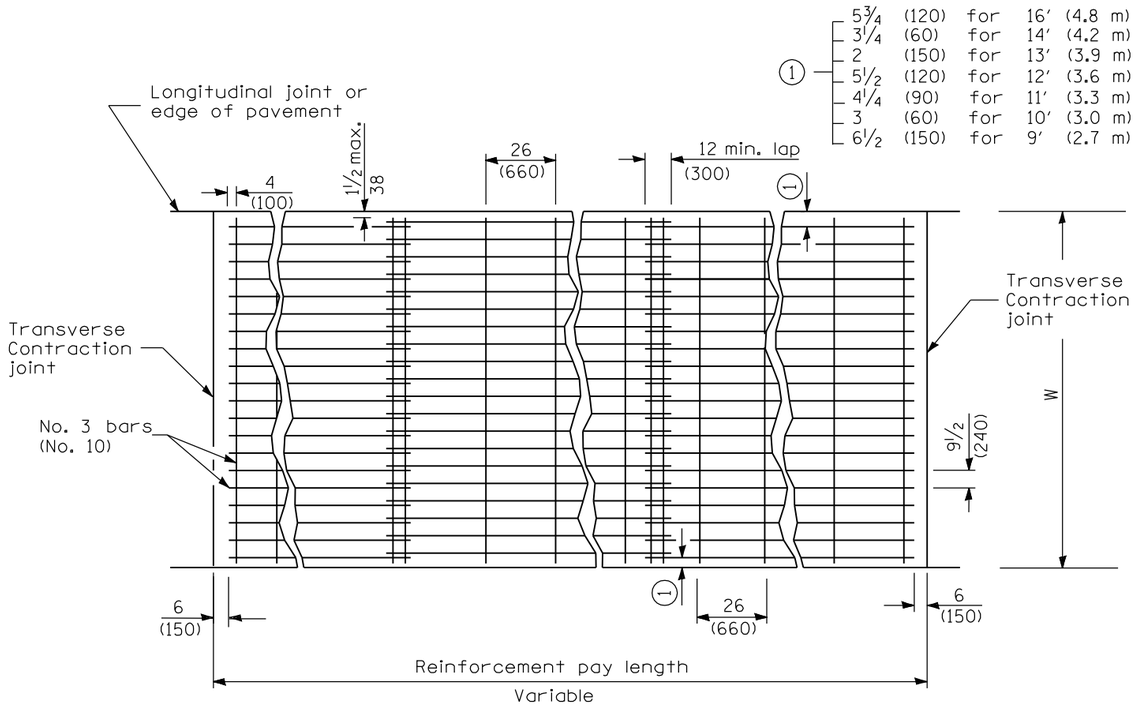

Approximately 63 lbs./100 sq. ft. (3.7 kg/m²)

When clipped bar mats are used, each bar intersection shall be clipped with W1.7 (3.74) wire.

TYPE B

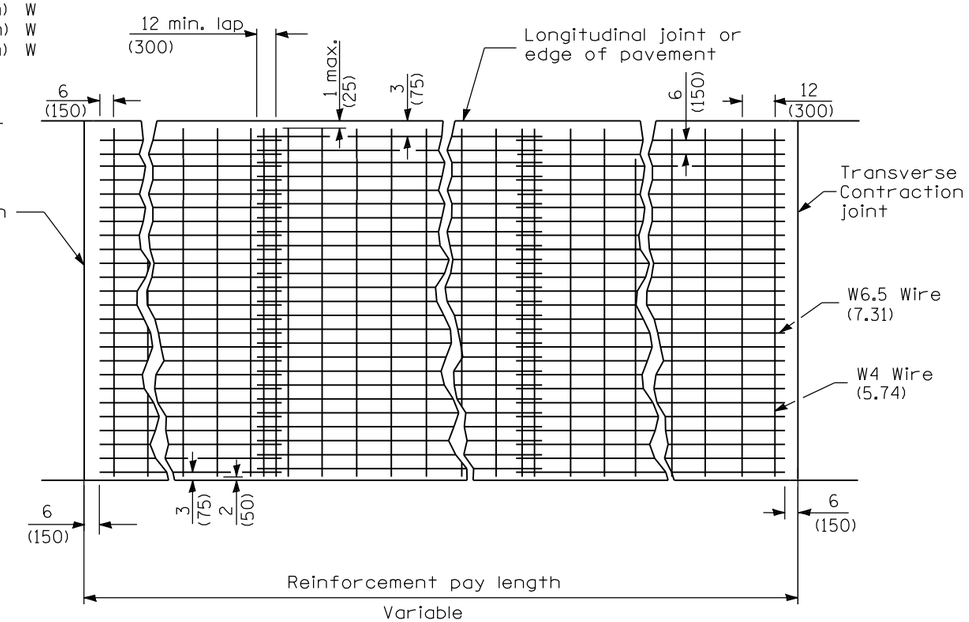

Approximately 63 lbs./100 sq. ft. (3.07 kg/m²)

TYPE A

✳ When the 12 (300) minimum cannot be achieved, the transverse joints shall be extended to either the longitudinal joint or edge of pavement.

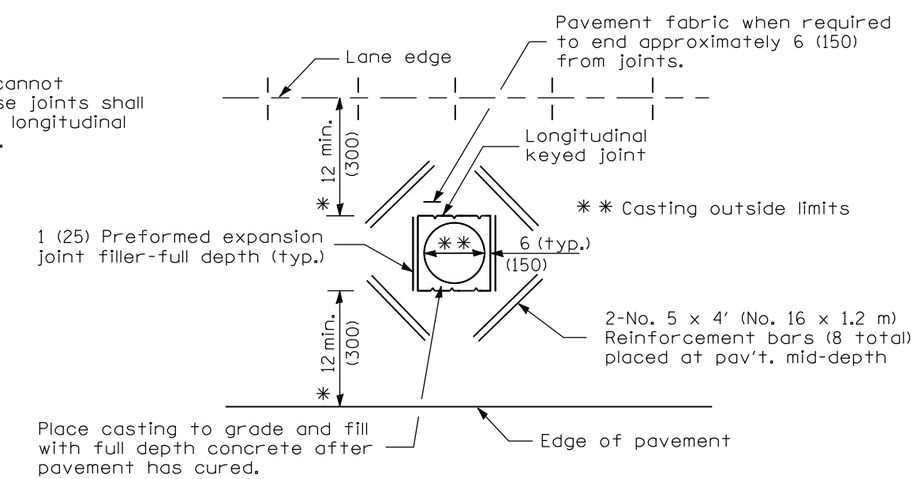

DETAIL OF ADDED REINFORCEMENT FOR PAVEMENT BLOCKS-OUTS

GENERAL NOTES

Pavement block-outs shall be at least 24 (600) from contraction joints.

Pavement fabric which is lapped longitudinally shall have a minimum lap of 6 (150).

Pavement fabric may be positioned with the transverse wires on top or bottom of the longitudinal wires.

All dimensions are in inches (millimeters) unless otherwise shown.

Illinois Department of Transportation

PASSED January 1, 2008
ENGINEER OF POLICY AND PROCEDURES
APPROVED January 1, 2008
ENGINEER OF DESIGN AND ENVIRONMENT

ISSUED 1-1-97

DATE	REVISIONS
1-1-08	Switched units to English (metric).
1-1-04	Minor corrections of joint information

PAVEMENT FABRIC

STANDARD 420701–02

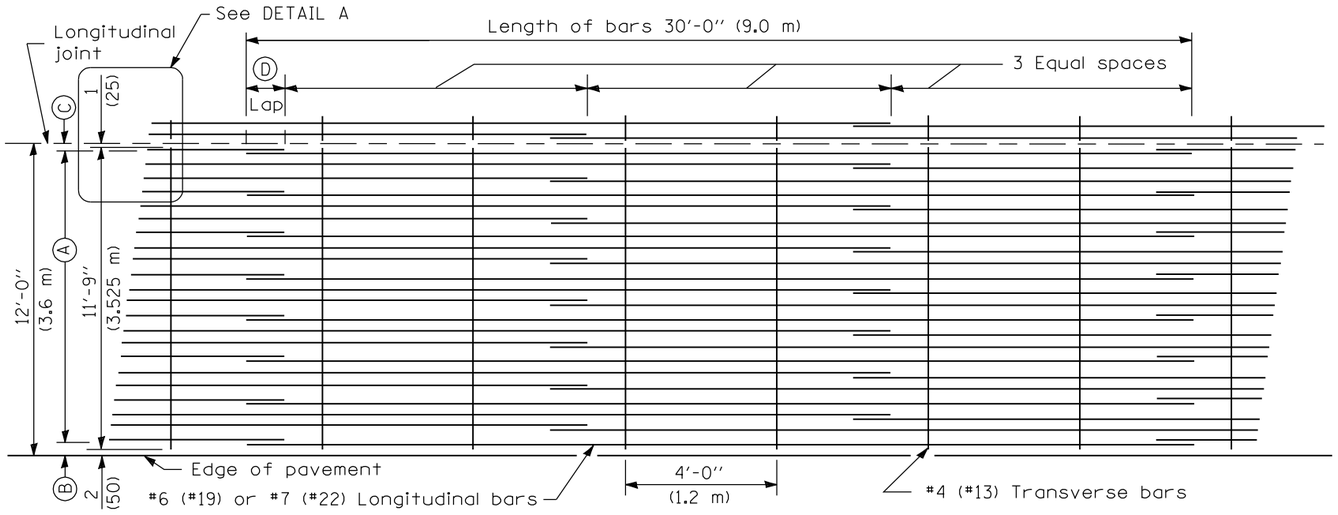

LAP DETAIL I

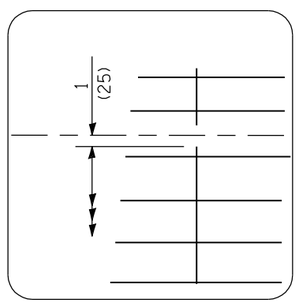

DETAIL A

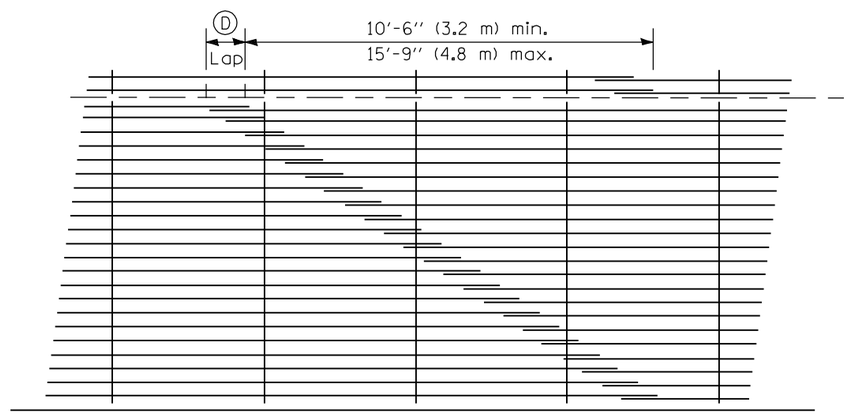

LAP DETAIL II

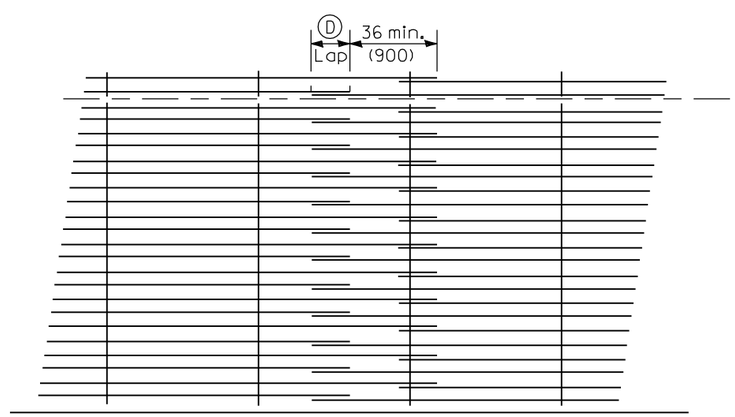

LAP DETAIL III

ENGLISH (inches)					
Bar Size	Pavement Thickness	Ⓐ (Approx. Spacing)	Ⓑ	Ⓒ	Ⓓ
#6	7¾ thru 8½	18 spaces (19 bars) @ 7⅝	3½	3	22
#6	8¾ thru 9½	20 spaces (21 bars) @ 6⅞	3½	3	22
#6	9¾ thru 10½	22 spaces (23 bars) @ 6¼	3½	3	22
#6	10¾ thru 11½	24 spaces (25 bars) @ 5¾	3½	3	22
#6	11¾ thru 12½	27 spaces (28 bars) @ 5⅛	3½	3	22
#7	9¾ thru 10½	16 spaces (17 bars) @ 8⅝	3½	3	26
#7	10¾ thru 11½	18 spaces (19 bars) @ 7⅝	3½	3	26
#7	11¾ thru 12½	19 spaces (20 bars) @ 7¼	3½	3	26
#7	12¾ thru 13½	21 spaces (22 bars) @ 6½	3½	3	26
#7	13¾ thru 14½	23 spaces (24 bars) @ 6	3½	3	26
#7	14¾ thru 15½	24 spaces (25 bars) @ 5¾	3½	3	26
#7	15¾ thru 16½	26 spaces (27 bars) @ 5¼	3½	3	26

METRIC (mm)					
Bar Size	Pavement Thickness	Ⓐ (Approx. Spacing)	Ⓑ	Ⓒ	Ⓓ
#19	200 thru 220	18 spaces (19 bars) @ 191	90	75	560
#19	230 thru 250	21 spaces (22 bars) @ 163	95	80	560
#19	260 thru 280	23 spaces (24 bars) @ 149	90	80	560
#19	290 thru 310	26 spaces (27 bars) @ 132	90	75	560
#19	320 thru 340	29 spaces (30 bars) @ 118	95	80	560
#22	230 thru 250	15 spaces (16 bars) @ 229	90	75	660
#22	260 thru 280	17 spaces (18 bars) @ 202	90	75	660
#22	290 thru 310	19 spaces (20 bars) @ 181	90	70	660
#22	320 thru 340	21 spaces (22 bars) @ 163	95	80	660
#22	350 thru 370	23 spaces (24 bars) @ 149	90	80	660
#22	380 thru 400	25 spaces (26 bars) @ 137	95	80	660
#22	410 thru 430	27 spaces (28 bars) @ 127	90	80	660

GENERAL NOTES

Except as noted or shown, the dimensions and notes specified for LAP DETAIL I are typical for LAP DETAIL II and III.

The Ⓑ dimension and the distance from the end of the transverse bar to the edge of pavement may be increased by 1 (25) for slip form paving.

All dimensions are in inches (millimeters) unless otherwise shown.

Illinois Department of Transportation

PASSED January 1, 2008
ENGINEER OF POLICY AND PROCEDURES

APPROVED January 1, 2008
ENGINEER OF DESIGN AND ENVIRONMENT

ISSUED 1-1-97

DATE	REVISIONS
1-1-08	Switched units to English (metric).
1-1-03	Soft-converted metric reinf. bars

BAR REINFORCEMENT FOR CRC PAVEMENT

STANDARD 421001-02

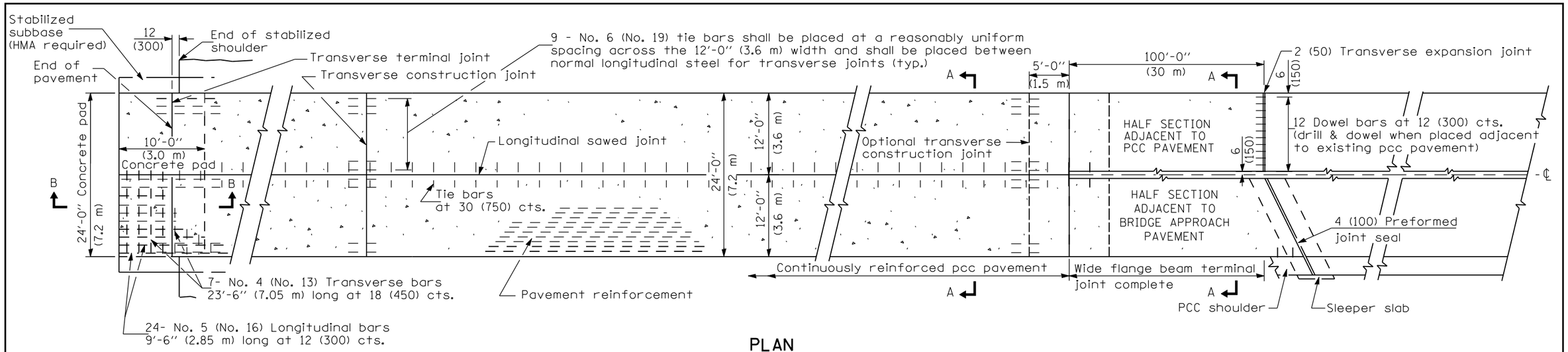

PLAN

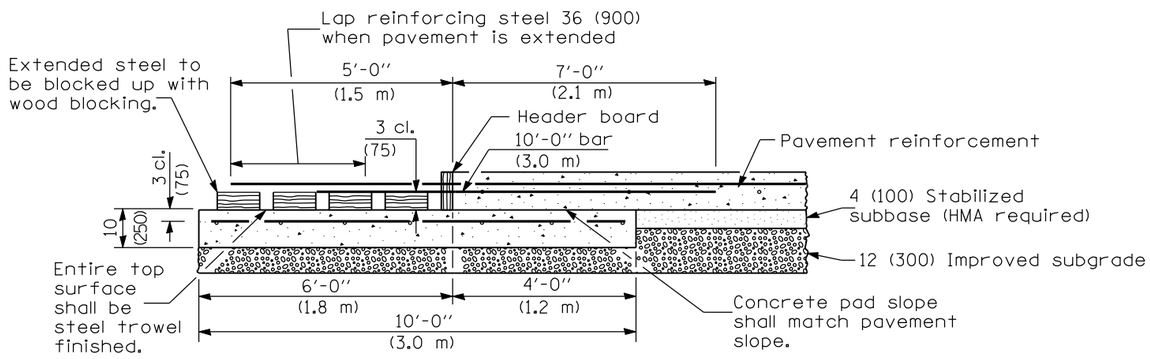

TRANSVERSE TERMINAL JOINT

SECTION B-B

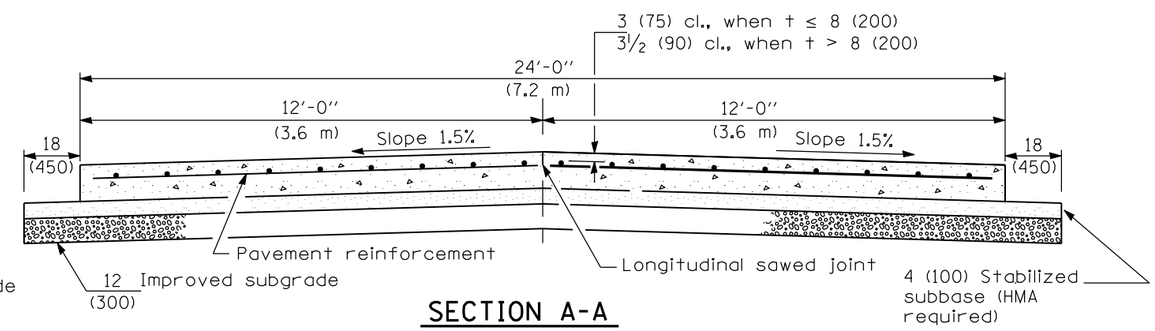

SECTION A-A

(TYPICAL 2-LANE WITH SHOULDERS)

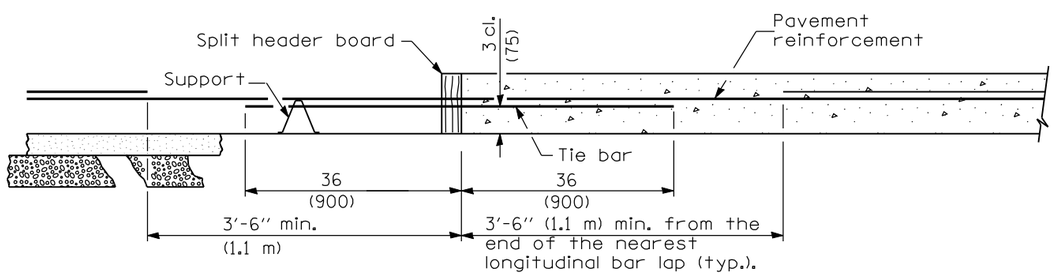

TRANSVERSE CONSTRUCTION JOINT

GENERAL NOTES

Sealant components for the wide flange beam terminal joint shall be as follows: The sealant shall be Dow Corning 888 Silicone Highway Joint Sealant. The tape shall be Polyethylene Tape No. 40. The primer, used on the metal only, shall be Dow Corning 1200. At the Contractor's option the joint may be sealed as shown in the optional groove detail.

See Standards 420001 and 420401 for joint details not shown.

See Standard 421001 for details of pavement reinforcement.

All dimensions are in inches (millimeters) unless otherwise shown.

Illinois Department of Transportation

PASSED January 1. 2008
ENGINEER OF POLICY AND PROCEDURES
APPROVED January 1. 2008
ENGINEER OF DESIGN AND ENVIRONMENT

ISSUED 1-1-97

DATE	REVISIONS
1-1-08	Switched units to
	English (metric).
1-1-07	Switched to Hot-Mix
	Asphalt (HMA)
	terminology.

24' (7.2 m) CRC PAVEMENT

(WITH WIDE FLANGE BEAM TERMINAL JOINT)
(Sheet 1 of 2)

STANDARD 421101-07

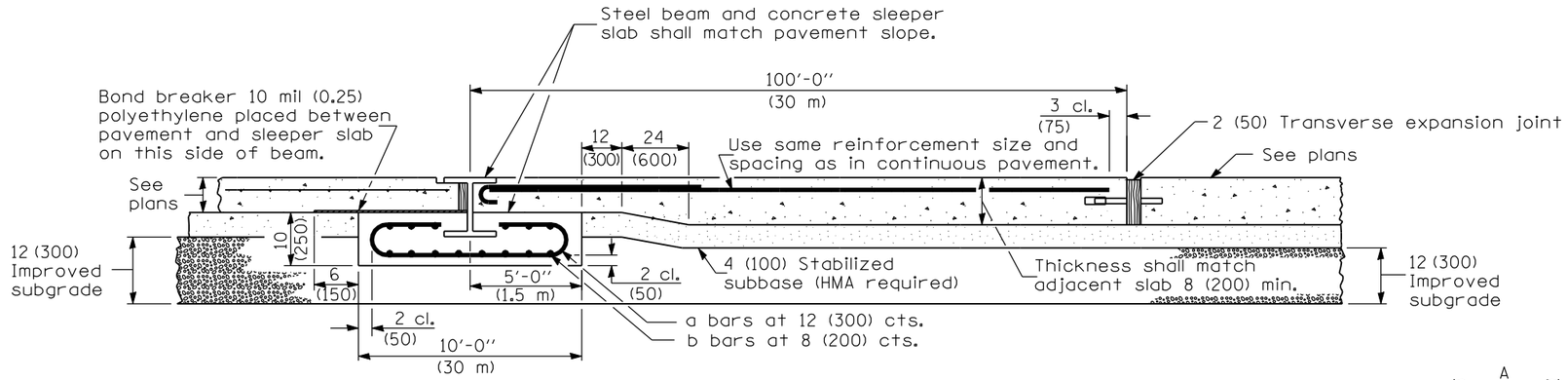

WIDE FLANGE BEAM TERMINAL JOINT

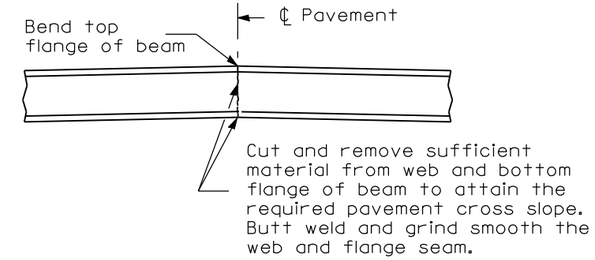

DETAIL OF CUTTING AND WELDING BEAM

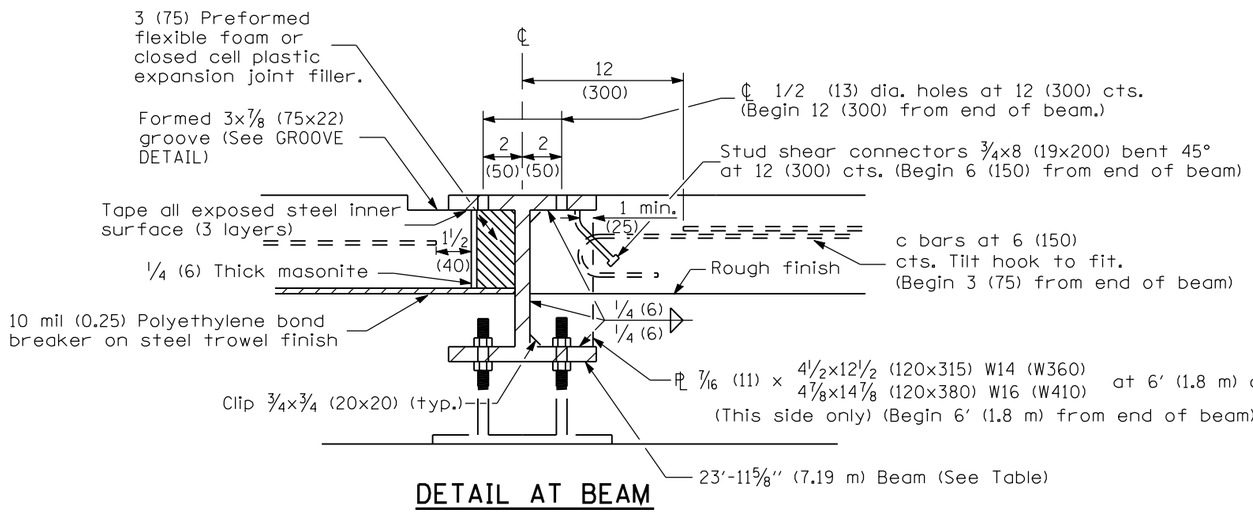

DETAIL AT BEAM

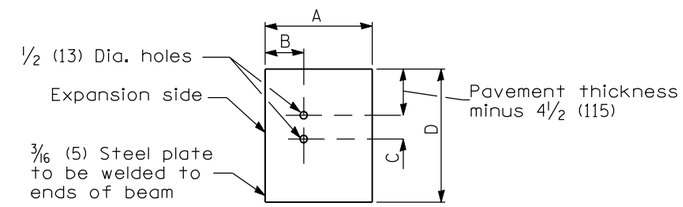

END PLATE

PAVEMENT THICKNESS	< 10 (250)	≥ 10 (250)
BEAM SIZE	W14x82 (W360x122)	W16x100 (W410x1149)
A	10 1/8 (255)	10 3/8 (265)
B	4 5/16 (110)	4 7/16 (115)
C	3 (75)	4 (100)
D	14 1/4 (360)	17 (430)

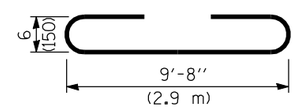

BAR a

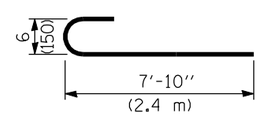

BAR c

MATERIALS REQUIRED FOR ONE TRANSVERSE TERMINAL JOINT COMPLETE

Concrete, cu. yds. (m^3)	7.4 (5.4)
Reinforcement bars, lbs. (kg)	348 (160)
Pavement reinforcement, sq. yds. (m^2)	13.3 (10.8)

MATERIALS REQUIRED FOR ONE WIDE FLANGE BEAM TERMINAL JOINT COMPLETE

Bar	No.	Size	Length	Shape
a	24	No. 4 (No. 13)	19'-0" (5.8 m)	
b	29	No. 5 (No. 16)	23'-8" (7.1 m)	
c	48	No. 6 (No. 19)	8'-6" (2.6 m)	

Concrete, cu. yds. (m^3)		7.4 (5.4)
Reinforcement Bars, lbs. (kg)		1635 (740)
Structural Steel, lbs. (kg)	W14 (W360)	2025* (906*)
	W16 (W410)	2466* (1104*)

*Weight includes beam, end plates, stiffener plates and studs.

Pavement, sq. yds. (m^2)	266.7 (216)
Pavement Reinforcement, sq. yds. (m^2)	266.7 (216)
Stabilized Subbase, sq. yds. (m^2)	285 (230.8)
Improved Subgrade, sq. yds. (m^2)	300 (243)

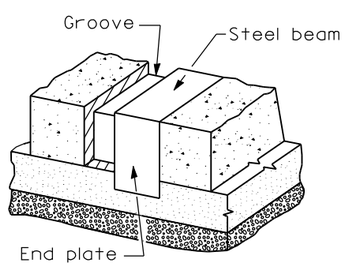

VIEW OF GROOVE AT EDGE OF PAVEMENT

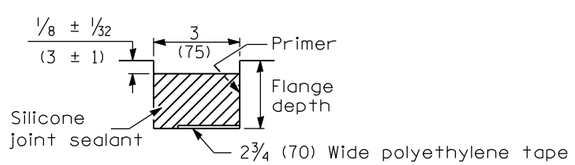

GROOVE DETAIL

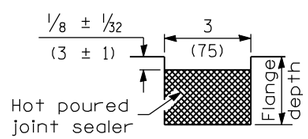

GROOVE DETAIL (OPTIONAL)

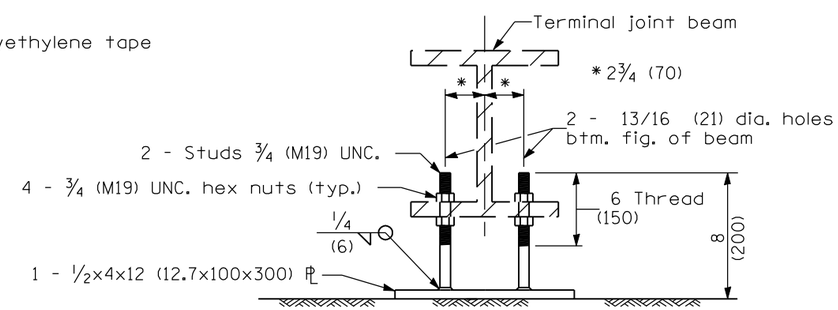

OPTIONAL ADJUSTABLE CHAIR

Illinois Department of Transportation

PASSED January 1, 2008
ENGINEER OF POLICY AND PROCEDURES
APPROVED January 1, 2008
ENGINEER OF DESIGN AND ENVIRONMENT

ISSUED 1-1-97

24' (7.2 m) CRC PAVEMENT

(WITH WIDE FLANGE BEAM TERMINAL JOINT)
(Sheet 2 of 2)

STANDARD 421101-07

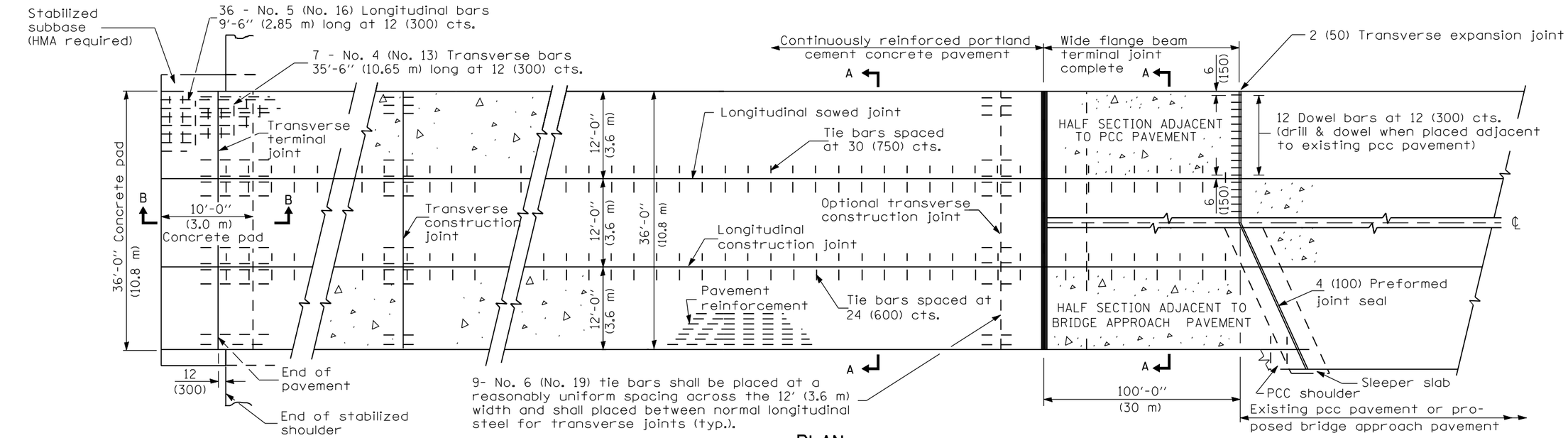

PLAN

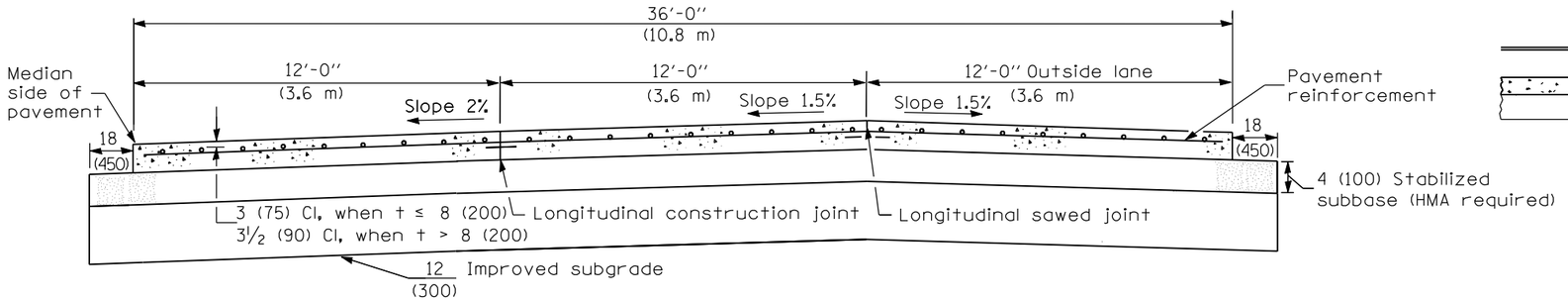

SECTION A-A

(TYPICAL 3-LANE, 1-WAY WITH SHOULDERS)

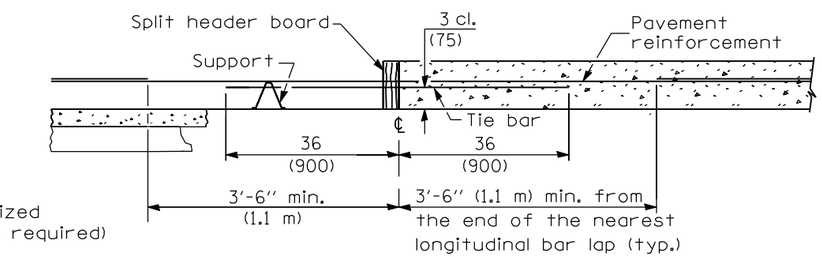

TRANSVERSE CONSTRUCTION JOINT

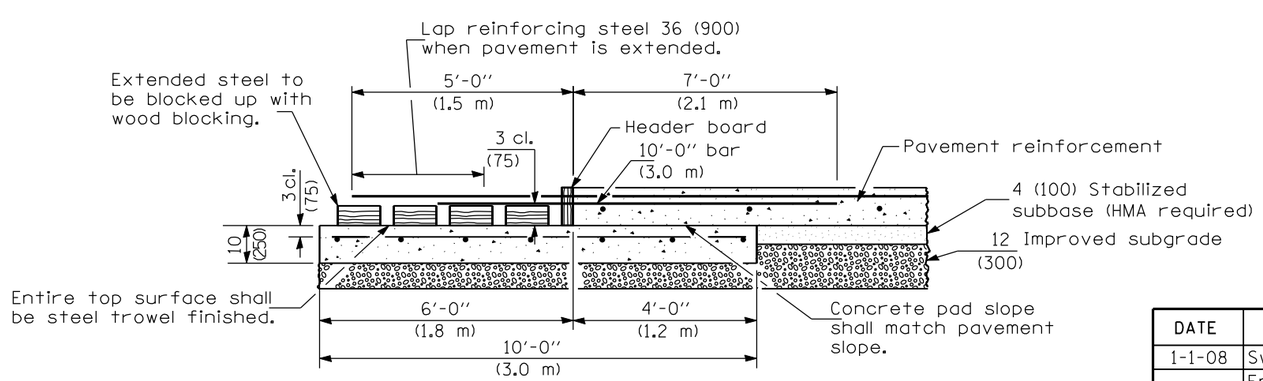

TRANSVERSE TERMINAL JOINT

SECTION B-B

GENERAL NOTES

Sealant components for the wide flange beam terminal joint shall be as follows: The sealant shall be Dow Corning 888 Silicone Highway Joint Sealant. The tape shall be Polyethylene Tape No. 40. The primer, used on the metal only, shall be Dow Corning 1200. At the Contractor's option the joint may be sealed as shown in the optional groove detail.

See Standard 421001 for details of pavement reinforcement.

See Standards 420001 and 420401 for joint details not shown.

All dimensions shall be in inches (millimeters) unless otherwise shown.

Illinois Department of Transportation

PASSED January 1, 2008
ENGINEER OF POLICY AND PROCEDURES

APPROVED January 1, 2008
ENGINEER OF DESIGN AND ENVIRONMENT

ISSUED 1-1-97

DATE	REVISIONS
1-1-08	Switched units to
	English (metric).
1-1-07	Switched to Hot-Mix
	Asphalt (HMA)
	terminology.

36' (10.8 m) CRC PAVEMENT

(WITH WIDE FLANGE BEAM TERMINAL JOINT)

(Sheet 1 of 2)

STANDARD 421106–07

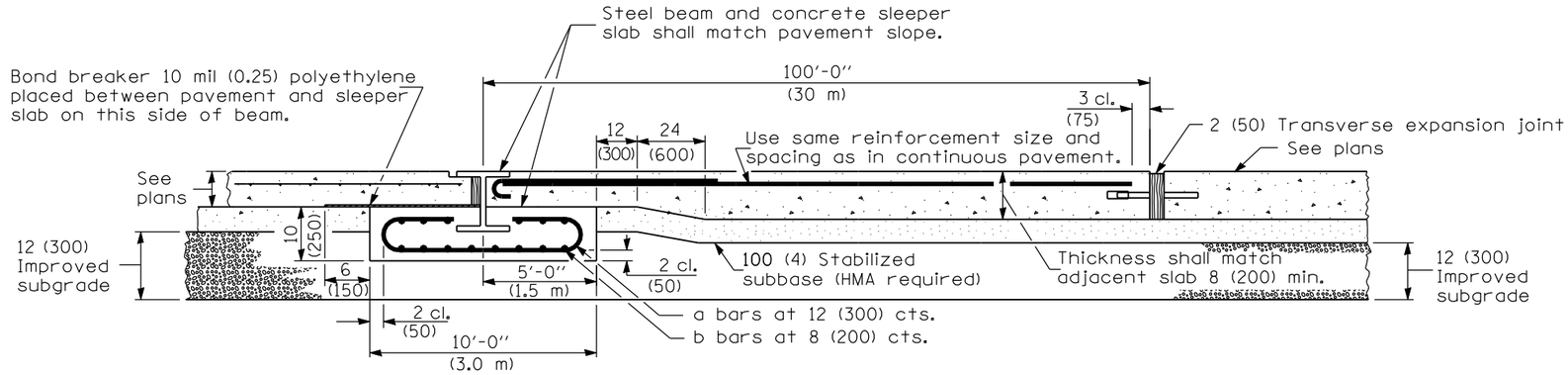

WIDE FLANGE BEAM TERMINAL JOINT

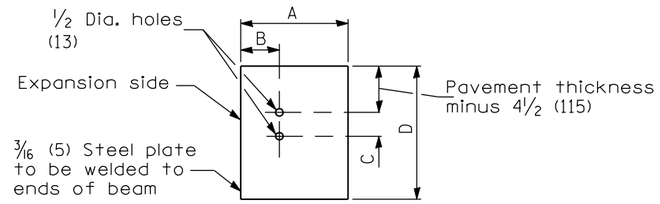

END PLATE

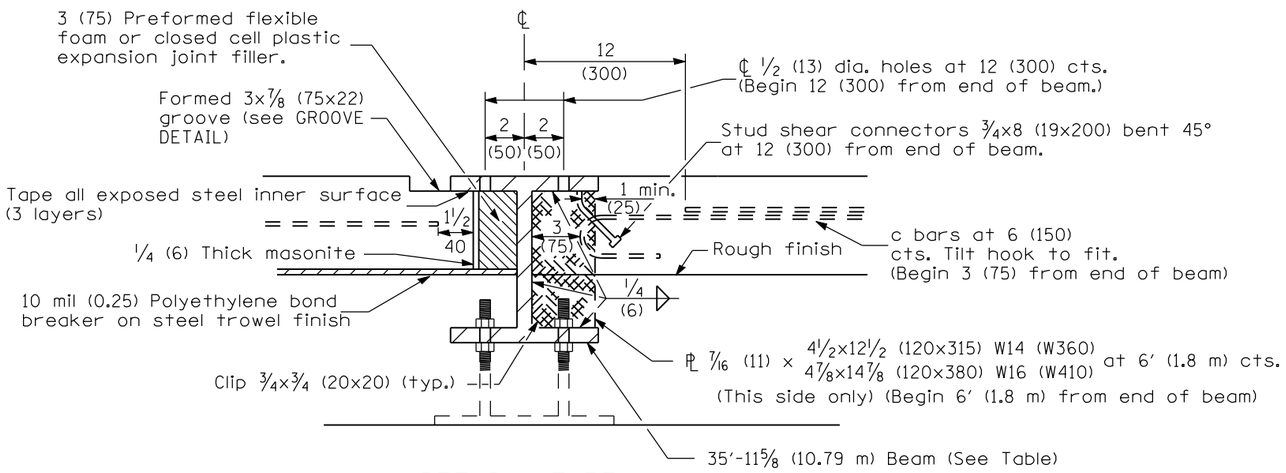

DETAIL AT BEAM

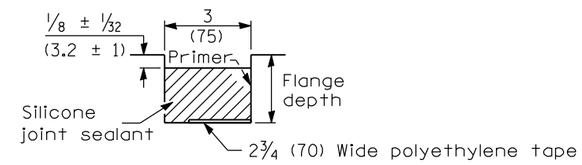

GROOVE DETAIL

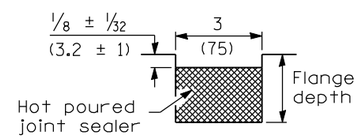

GROOVE DETAIL (OPTIONAL)

PAVEMENT THICKNESS	< 10 (250)	≥ 10 (250)
BEAM SIZE	W14x82 (W360x122)	W16x100 (W410x149)
A	10 1/8 (255)	10 3/8 (265)
B	4 5/16 (110)	4 7/16 (115)
C	3 (75)	4 (100)
D	14 1/4 (360)	17 (430)

MATERIALS REQUIRED FOR ONE TRANSVERSE TERMINAL JOINT COMPLETE

Concrete, cu. yds. (m^3)	11.1 (8.1)
Reinforcement bars, lbs. (kg)	523 (235)
Pavement reinforcement, sq. yds. (m^2)	20 (16.2)

MATERIALS REQUIRED FOR ONE WIDE FLANGE BEAM TERMINAL JOINT COMPLETE

Bar	No.	Size	Length	Shape
a	36	No. 4 (No. 13)	19′-0″ (5.8 m)	
b	29	No. 5 (No. 16)	35′-8″ (10.7 m)	
c	72	No. 6 (No. 19)	8′-6″ (2.6 m)	

Concrete, cu. yds. (m^3)		11.1 (8.1)
Reinforcement Bars, lbs. (kg)		2455 (1115)
Structural Steel, lbs. (kg)	W14 (W360)	3040 (1360)
	W16 (W410)	3710 (1655)

*Weight includes beam, end plates, stiffener plates and studs.

Pavement, sq. yds. (m^2)	400 (324)
Pavement Reinforcement, sq. yds. (m^2)	400 (324)
4 (100) Stabilized Subbase, sq. yds. (m^2)	411.6 (333.5)
Improved Subgrade, sq. yds. (m^2)	433.3 (351)

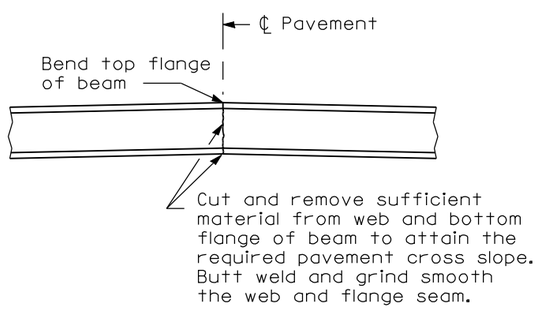

DETAIL OF CUTTING AND WELDING BEAM

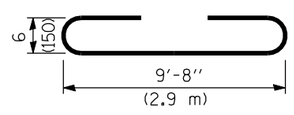

BAR a

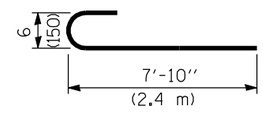

BAR c

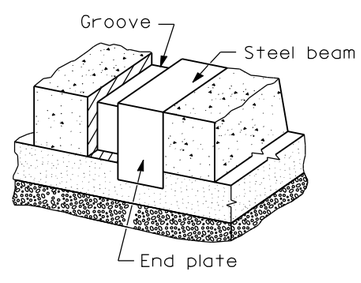

VIEW OF GROOVE AT EDGE OF PAVEMENT

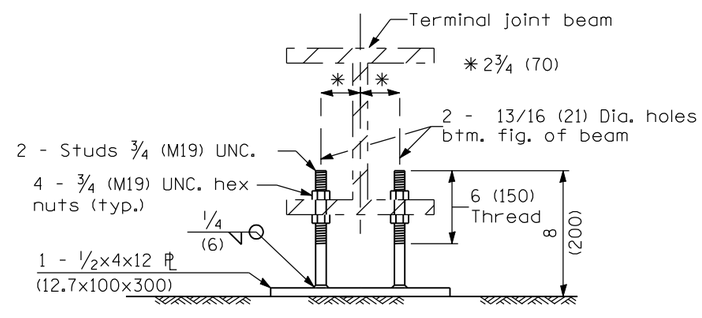

OPTIONAL ADJUSTABLE CHAIR

Illinois Department of Transportation

PASSED January 1, 2008
ENGINEER OF POLICY AND PROCEDURES
APPROVED January 1, 2008
ENGINEER OF DESIGN AND ENVIRONMENT

ISSUED 1-1-97

36′ (10.8 m) CRC PAVEMENT

(WITH WIDE FLANGE BEAM TERMINAL JOINT)
(Sheet 2 of 2)

STANDARD 421106–07

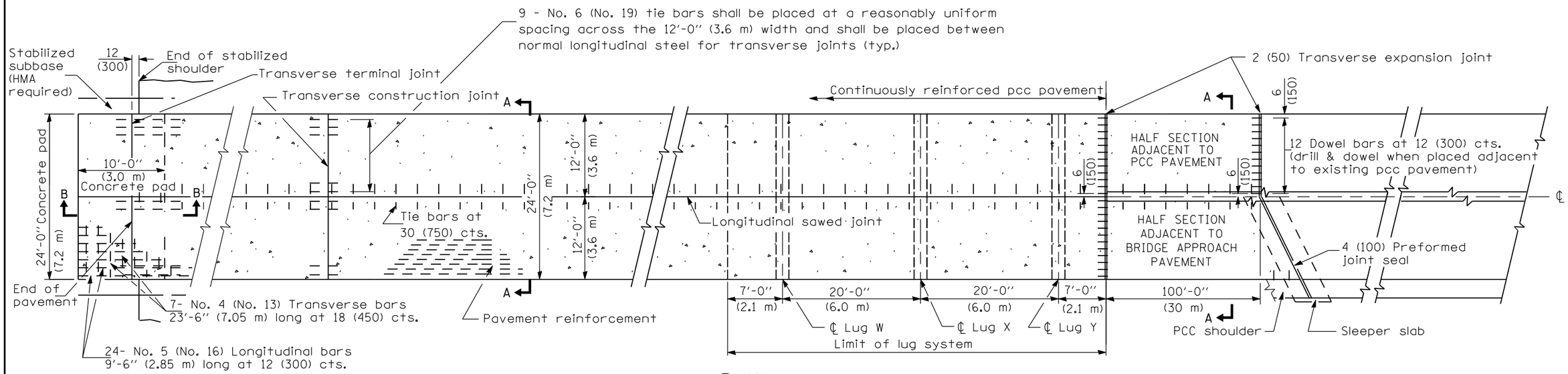

PLAN

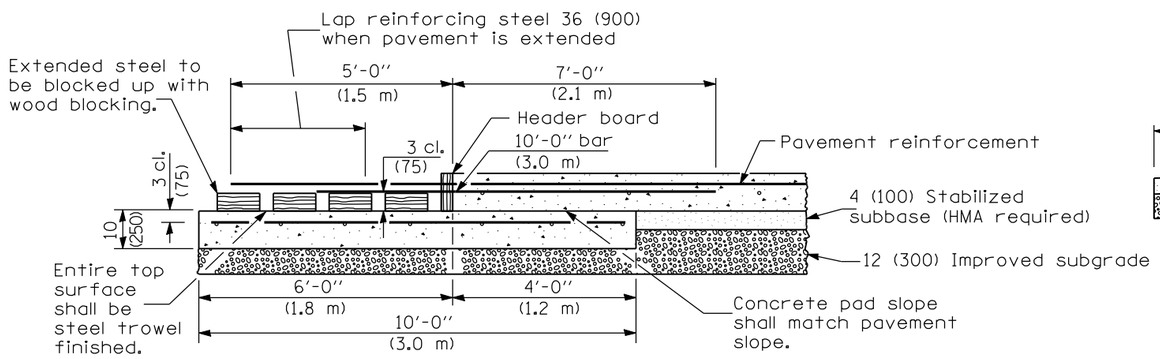

TRANSVERSE TERMINAL JOINT
SECTION B-B

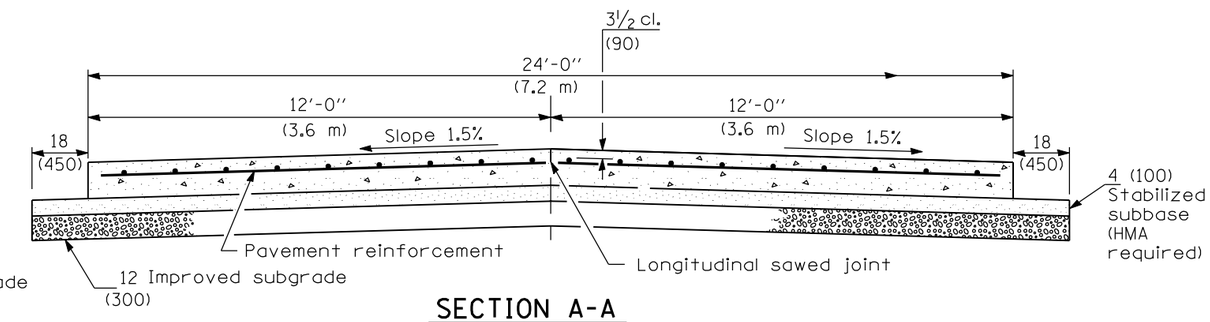

SECTION A-A
(TYPICAL 2-LANE WITH SHOULDERS)

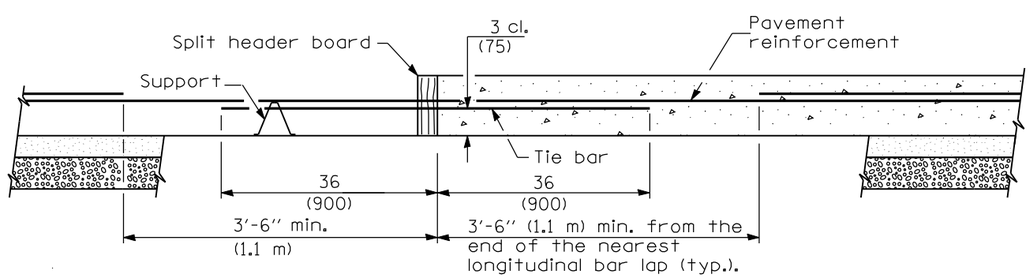

TRANSVERSE CONSTRUCTION JOINT

GENERAL NOTES

See Standard 421001 for details of pavement reinforcement.

See Standards 420001 and 420401 for joint details not shown.

All dimensions are in inches (millimeters) unless otherwise shown.

Illinois Department of Transportation

PASSED January 1, 2008
ENGINEER OF POLICY AND PROCEDURES
APPROVED January 1, 2008
ENGINEER OF DESIGN AND ENVIRONMENT
ISSUED 1-1-97

DATE	REVISIONS
1-1-08	Switched units to
	English (metric). Revised
	Lug. Sys. Table.
1-1-07	Switched to Hot-Mix
	Asphalt (HMA)
	terminology.

24' (7.2 m) CRC PAVEMENT
(WITH LUG SYSTEM)
(Sheet 1 of 2)

STANDARD 421201-06

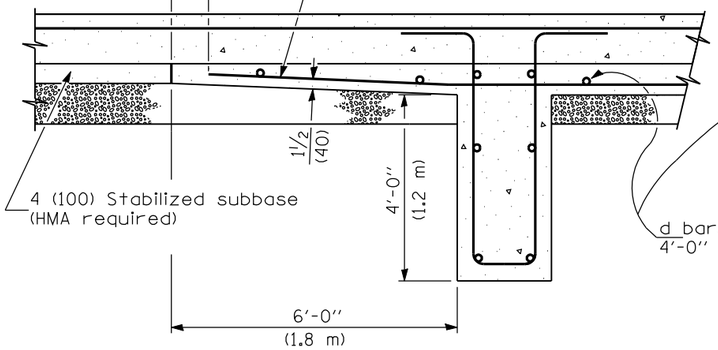

SECTION AT LUG W

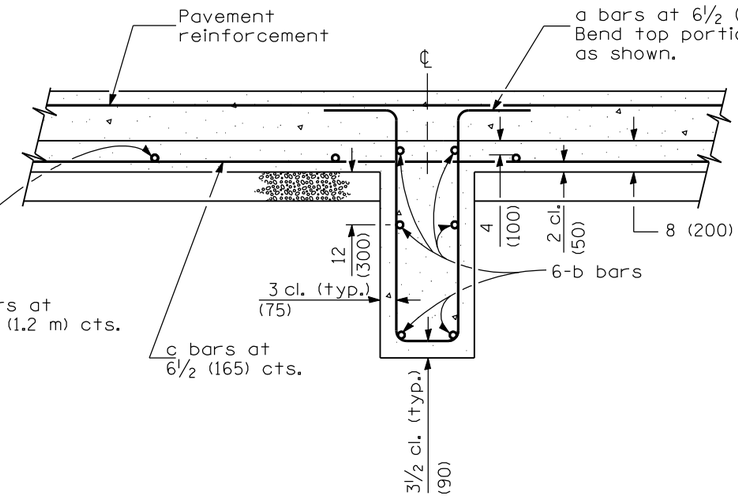

SECTION AT LUG X

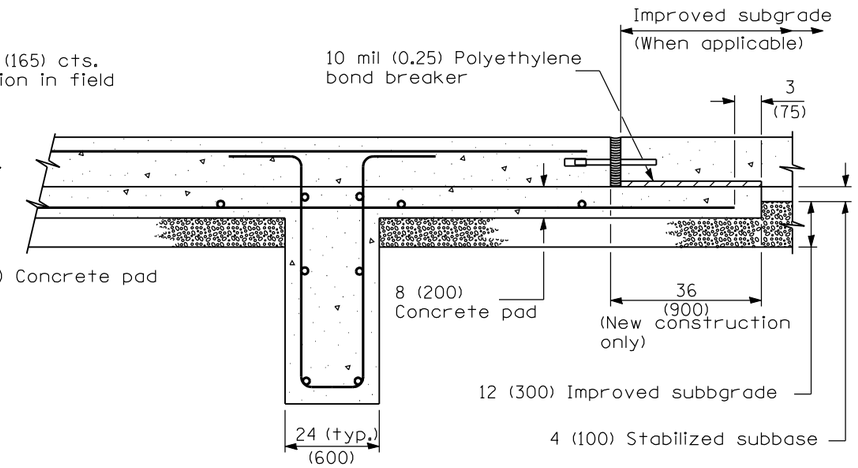

SECTION AT LUG Y

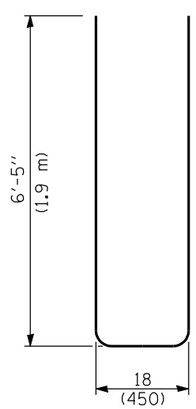

BAR a

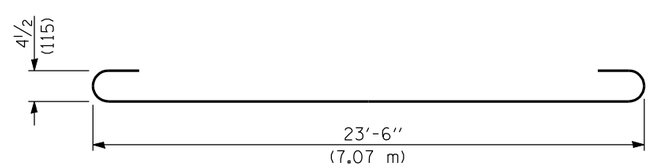

BAR b

MATERIALS REQUIRED FOR (1) ONE LUG SYSTEM

(Excluding Pavement Concrete and Pavement Reinforcement)

Bar	Qty.	Size	Length	Shape
a	132	No. 8 (No. 25)	14'-0" (4.25 m)	
b	18	No. 5 (No. 16)	24'-9" (7.43 m)	
c	132	No. 5 (No. 16)	20'-0" (6.10 m)	
d	28	No. 4 (No. 13)	11'-9" (3.52 m)	

Concrete, cu. yds. (m^3)	64.0 (48.9)
Reinforcing Bars, lbs. (kg)	8372 (3800)
Concrete Pad, sq. yds. (m^2)	144 (120)
Improved Subgrade, sq. yds. (m^2)	162 (135)

Illinois Department of Transportation

PASSED January 1, 2008

ENGINEER OF POLICY AND PROCEDURES

APPROVED January 1, 2008

ENGINEER OF DESIGN AND ENVIRONMENT

ISSUED 1-1-97

24' (7.2 m) CRC PAVEMENT

(WITH LUG SYSTEM)

(Sheet 2 of 2)

STANDARD 421201-06

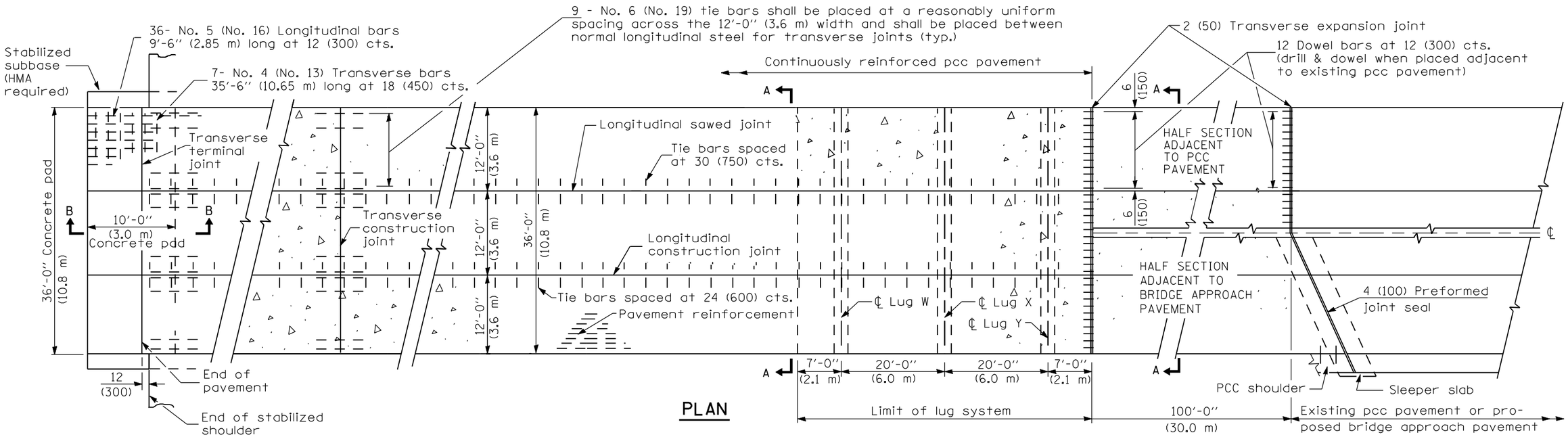

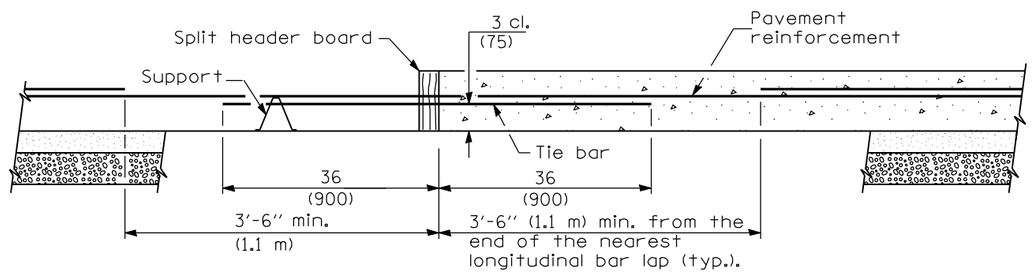

TRANSVERSE CONSTRUCTION JOINT

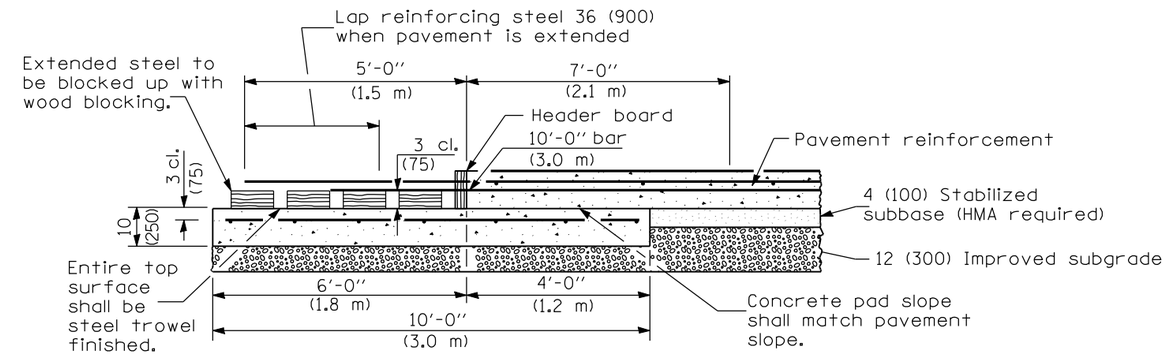

TRANSVERSE TERMINAL JOINT

SECTION B-B

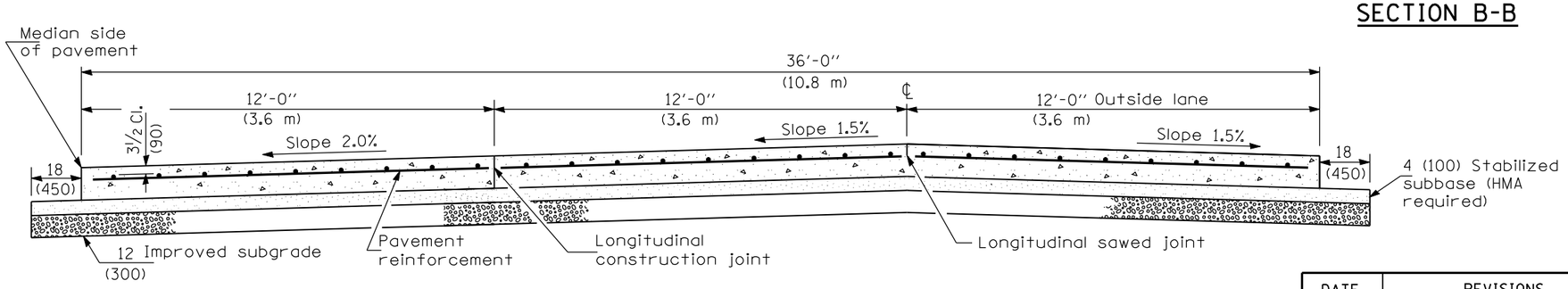

SECTION A-A

(TYPICAL 3-LANE, 1-WAY WITH SHOULDERS)

GENERAL NOTES

See Standard 421001 for details of pavement reinforcement.

See Standards 420001 and 420401 for joint details not shown.

All dimensions are in inches (millimeters) unless otherwise shown.

Illinois Department of Transportation

PASSED January 1, 2008
ENGINEER OF POLICY AND PROCEDURES
APPROVED January 1, 2008
ENGINEER OF DESIGN AND ENVIRONMENT

ISSUED 1-1-97

DATE	REVISIONS
1-1-08	Switched units to
	English (metric). Revised
	Lug Sys. Table.
1-1-07	Switched to Hot-Mix
	Asphalt (HMA)
	terminology.

36' (10.8 m) CRC PAVEMENT

(WITH LUG SYSTEM)

(Sheet 1 of 2)

STANDARD 421206-06

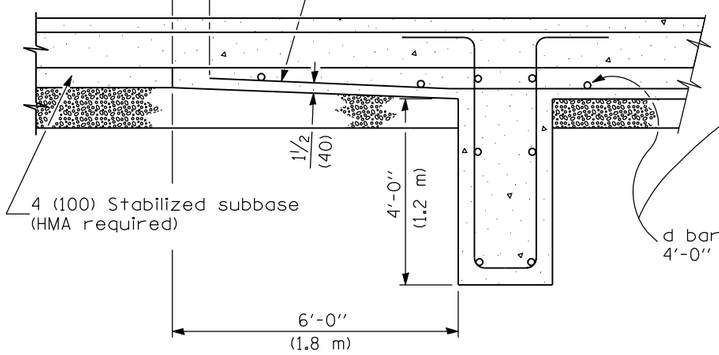

SECTION AT LUG W

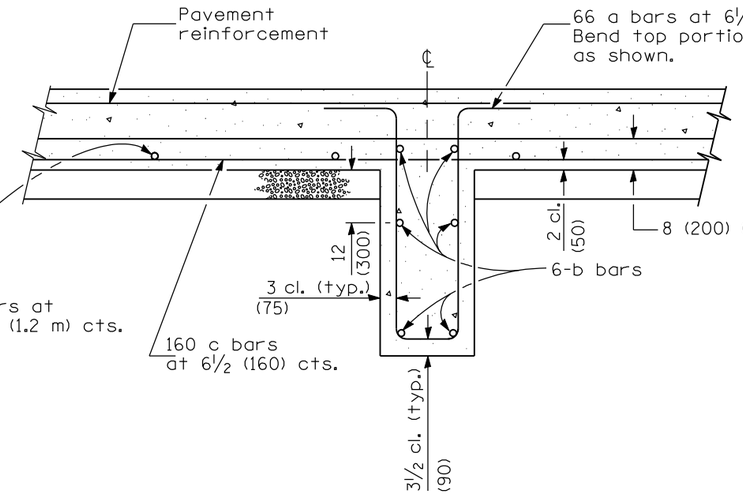

SECTION AT LUG X

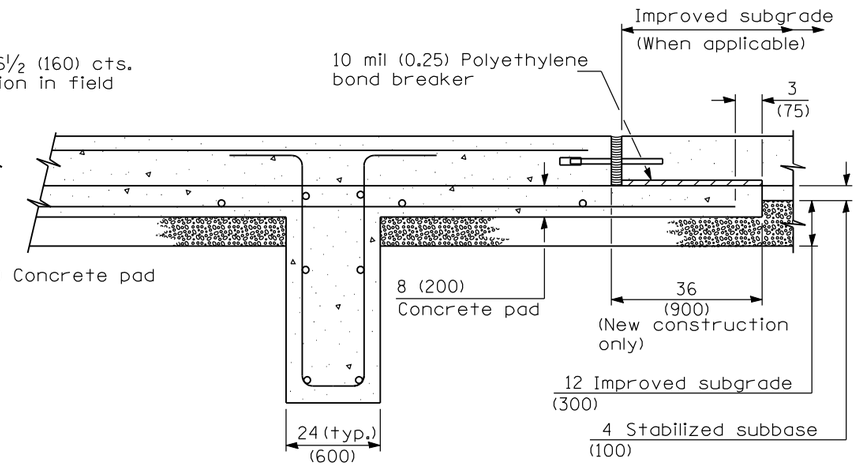

SECTION AT LUG Y

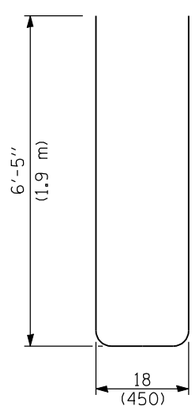

BAR a

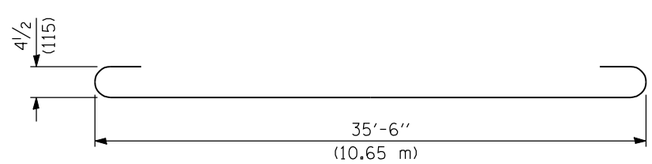

BAR b

MATERIALS REQUIRED FOR (1) ONE LUG SYSTEM

(Excluding Pavement Concrete and Pavement Reinforcement)

Bar	No.	Size	Length	Shape
a	198	No. 8 (No. 25)	14'-0" (4.25 m)	
b	18	No. 5 (No. 16)	36'-9" (11.30 m)	
c	198	No. 5 (No. 16)	20'-0" (6.10 m)	
d	42	No. 4 (No. 13)	11'-9" (3.52 m)	

Concrete, cu. yds. (m^3)	96.0 (73.4)
Reinforcing Bars, lbs. (kg)	12,550 (5695)
Concrete Pad, sq. yds. (m^2)	216 (181)
Improved Subgrade, sq. yds. (m^2)	208 (174)

Illinois Department of Transportation

PASSED January 1, 2008
ENGINEER OF POLICY AND PROCEDURES
APPROVED January 1, 2008
ENGINEER OF DESIGN AND ENVIRONMENT

ISSUED 1-1-97

36' (10.8 m) CRC PAVEMENT

(WITH LUG SYSTEM)

(Sheet 2 of 2)

STANDARD 421206–06

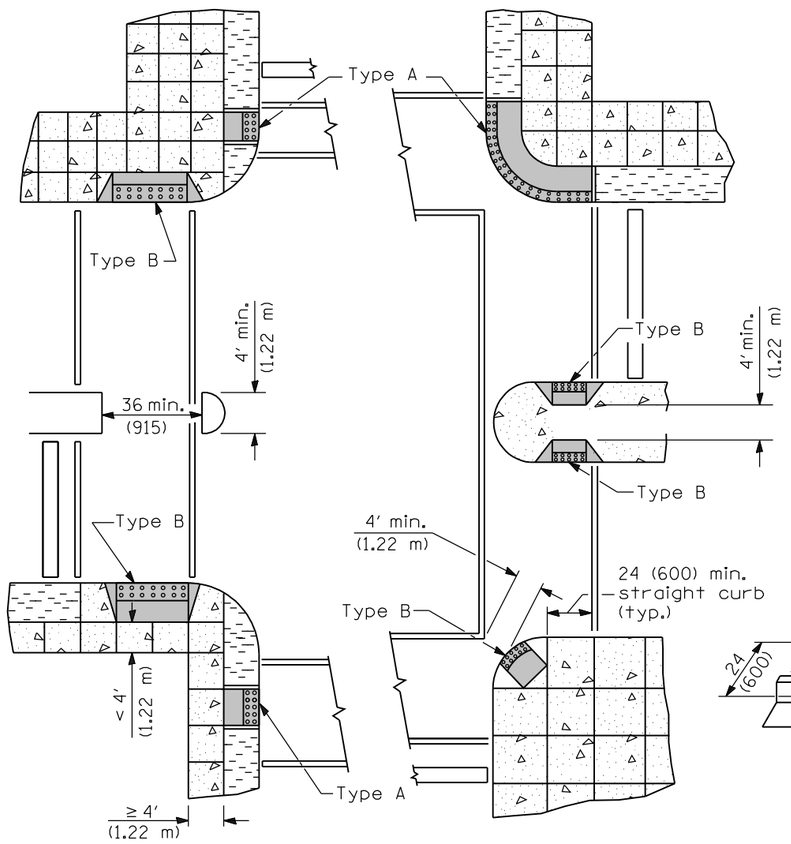

RECOMMENDED LOCATION OF RAMPS

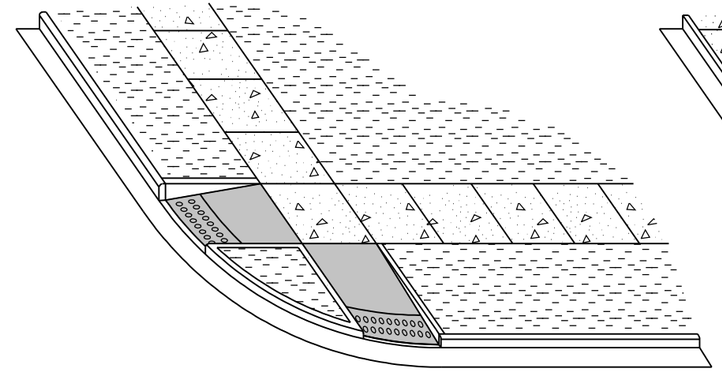

TYPE A RAMPS

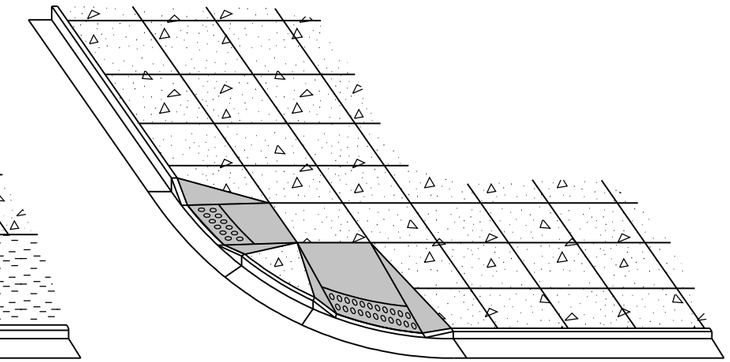

TYPE B RAMPS

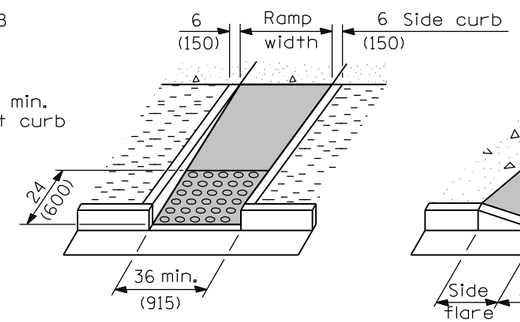

TYPE A

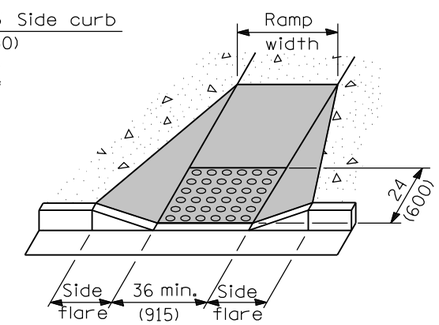

TYPE B

DETAILS OF RAMPS

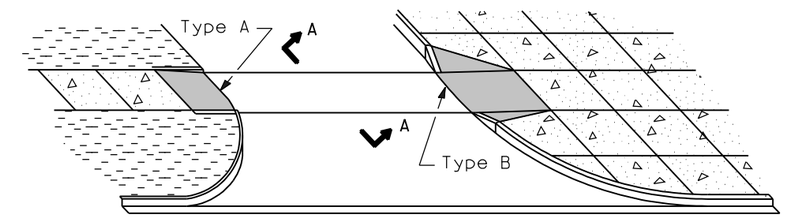

RAMPS AT ALLEYS OR ENTRANCES

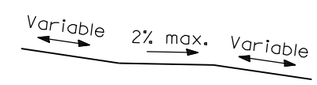

SECTION A-A

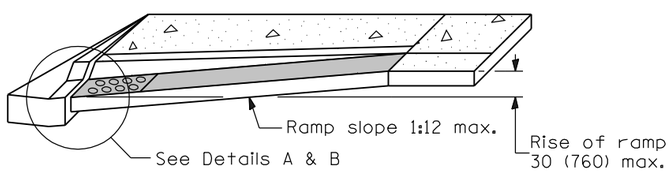

RAMP PROFILE

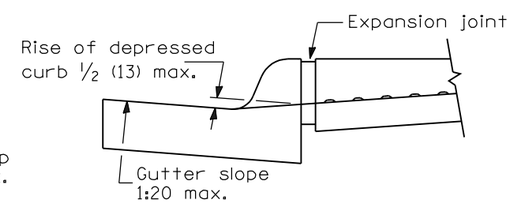

DETAIL A

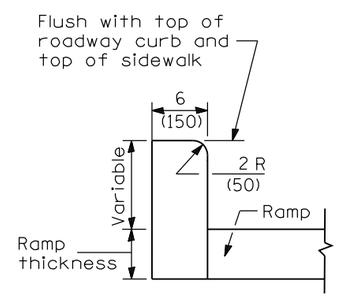

DETAIL OF SIDE CURB

(Side curb may be constructed monolithically with ramp)

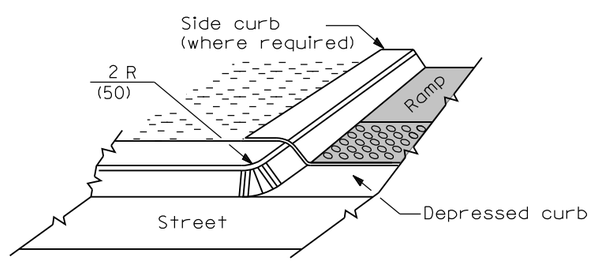

DETAIL B

LEGEND

- Sidewalk
- Ramp
- Detectable Warnings
- Non walking area

GENERAL NOTES

Detectable warnings shall be installed at curb ramps, medians and pedestrian refuge islands, at-grade railroad crossings, transit platform edges, and other locations where pedestrians are required to cross a hazardous vehicular way. Detectable warnings shall also be installed at alleys and commercial entrances when permanent traffic control devices are present.

The maximum slope of the side flare for Type B ramps shall be 1:10; however, if the width of the landing area between the top of the ramp and an obstruction is less than 4'-0" (1.22 m) then the maximum slope shall be 1:12.

All slope ratios are expressed as units of vertical displacement to units of horizontal displacement (V:H).

All dimensions are in inches (millimeters) unless otherwise shown.

Illinois Department of Transportation

PASSED January 1, 2008
ENGINEER OF POLICY AND PROCEDURES
APPROVED January 1, 2008
ENGINEER OF DESIGN AND ENVIRONMENT

ISSUED 1-1-97

DATE	REVISIONS
1-1-08	Switched units to English (metric).
8-1-05	Revised placement of detectable warnings. title.

CURB RAMPS FOR SIDEWALKS

(Sheet 1 of 2)

STANDARD 424001-05

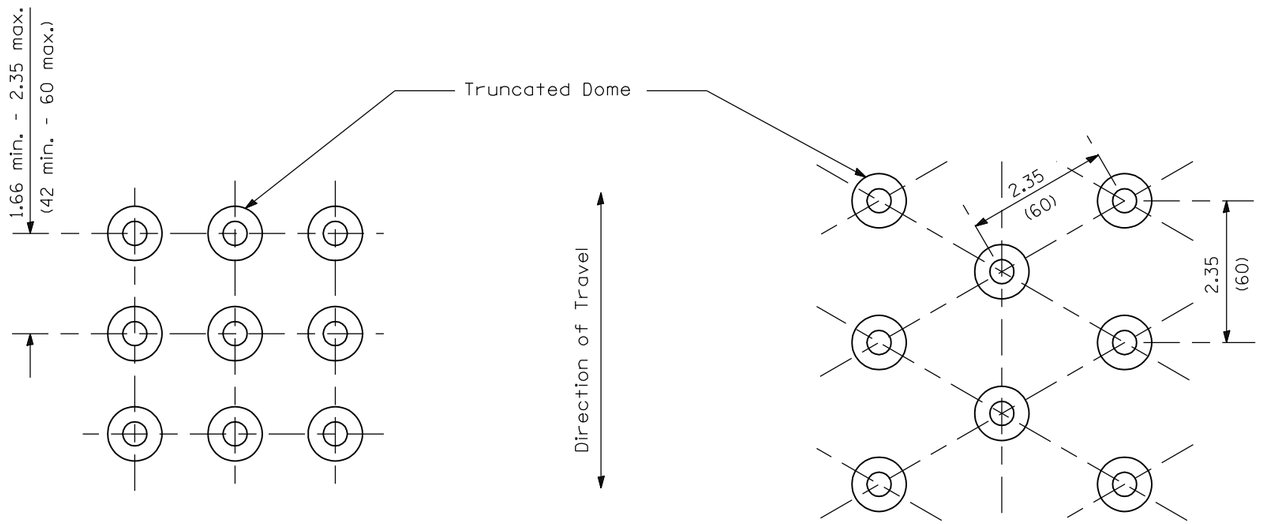

SQUARE PATTERN
(Parallel Alignment)

TRIANGULAR PATTERN

DETECTABLE WARNINGS DETAIL

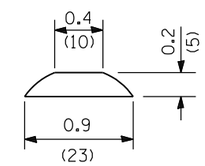

TRUNCATED DOME DETAIL

Illinois Department of Transportation

PASSED January 1, 2008
ENGINEER OF POLICY AND PROCEDURES

APPROVED January 1, 2008
ENGINEER OF DESIGN AND ENVIRONMENT

ISSUED 1-1-97

CURB RAMPS FOR SIDEWALKS

(Sheet 2 of 2)

STANDARD 424001-05

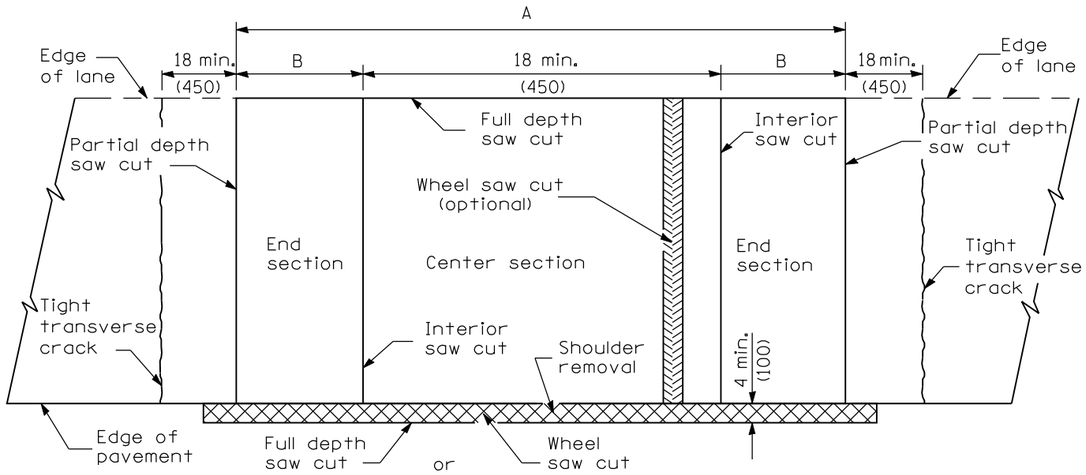

PAVEMENT SAWING DETAIL

(HMA SHOULDER)

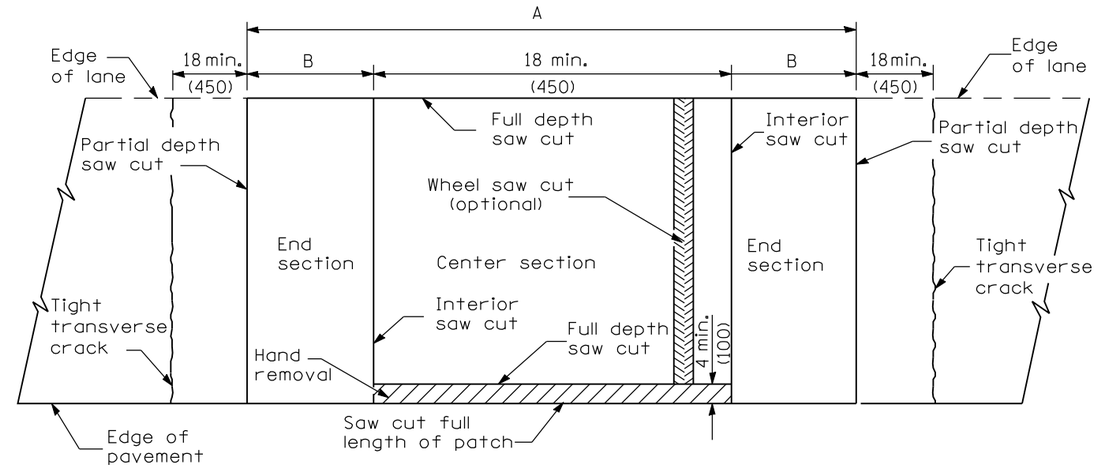

PAVEMENT SAWING DETAIL

(PCC SHOULDER)

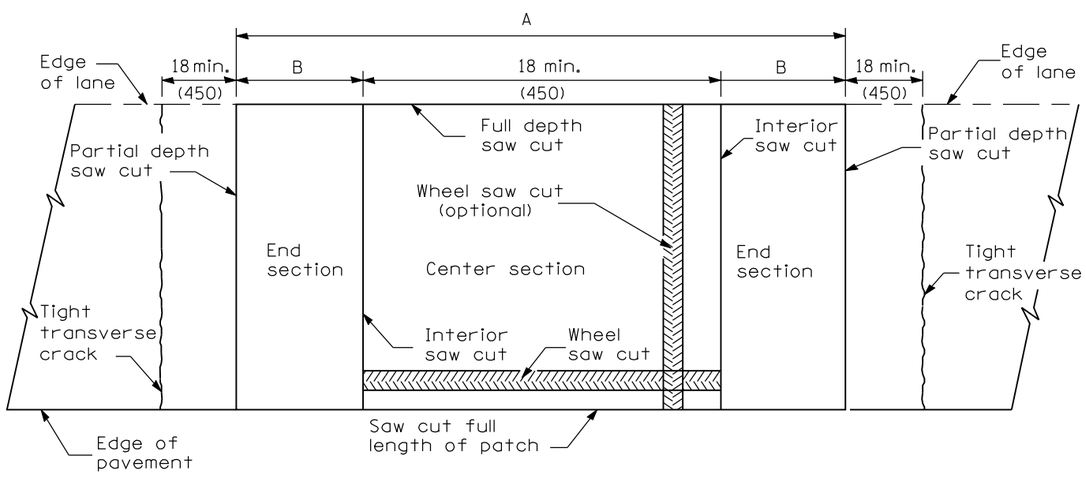

ALTERNATE SAWING DETAIL

(PCC SHOULDER)

EXISTING REINFORCEMENT BARS	A (min.)	B (min.)	C (min.)
No. 5 (No. 16)	4'-6" (1.4 m)	18 (450)	16 (400)
No. 6 (No. 19)	5'-0" (1.5 m)	21 (525)	19 (475)
No. 7 (No. 22)	5'-6" (1.7 m)	24 (600)	22 (550)
Fabric	5'-0" (1.5 m)	21 (525)	18 (450)

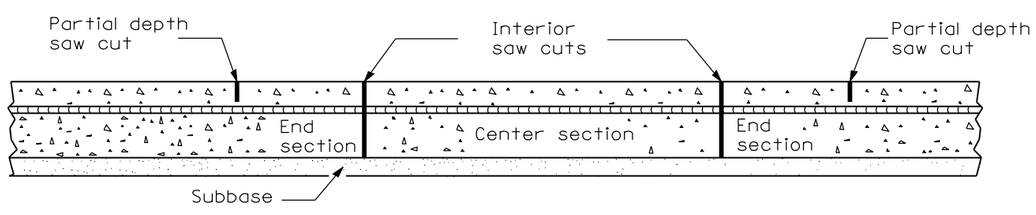

SAW CUT DETAIL

GENERAL NOTES

When patching two adjacent lanes in one operation, the longitudinal joint shall be a longitudinal sawed joint as detailed on Standard 420001; however, the groove may be either preformed or sawed.

All dimensions are in inches (millimeters) unless otherwise shown.

Illinois Department of Transportation

PASSED January 1, 2008
ENGINEER OF POLICY AND PROCEDURES
APPROVED January 1, 2008
ENGINEER OF DESIGN AND ENVIRONMENT

ISSUED 1-1-97

DATE	REVISIONS
1-1-08	Switched units to English (metric).
1-1-07	Revised General Notes.

CLASS A PATCHES

(Sheet 1 of 2)

STANDARD 442001-04

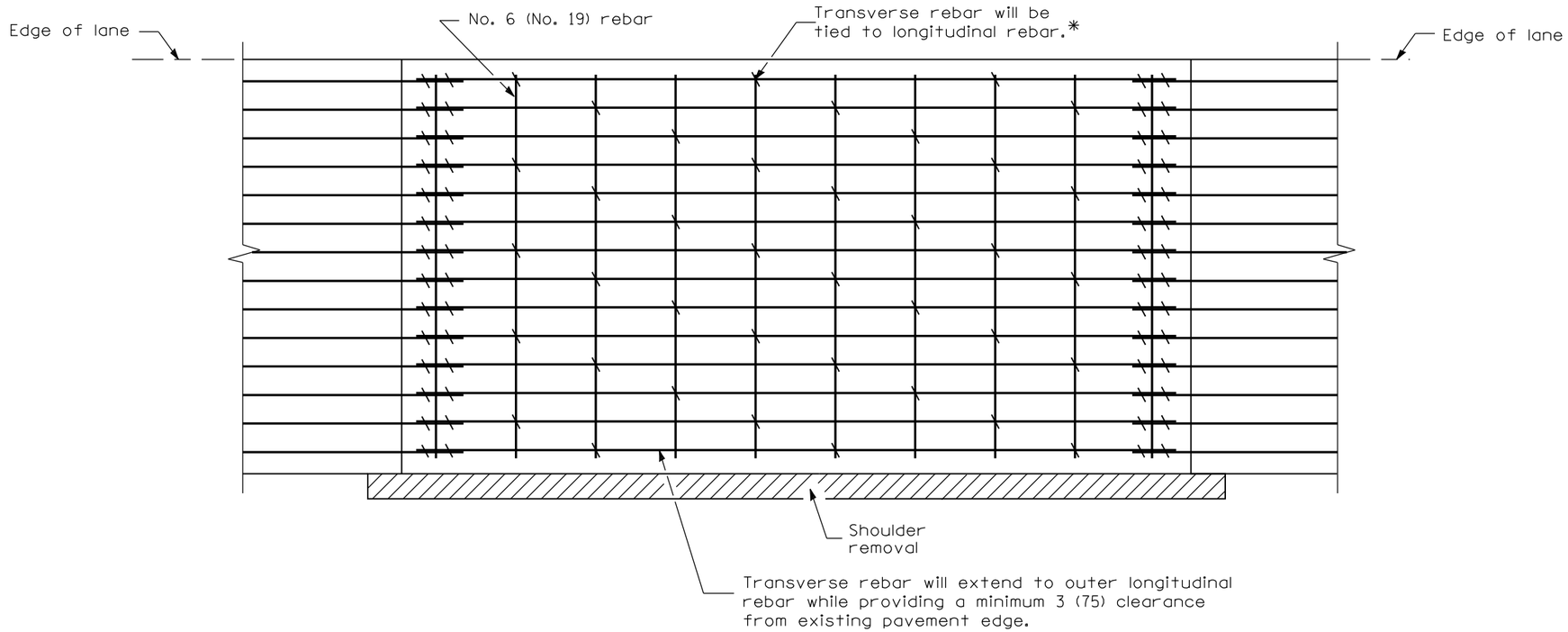

PAVEMENT REINFORCEMENT DETAIL

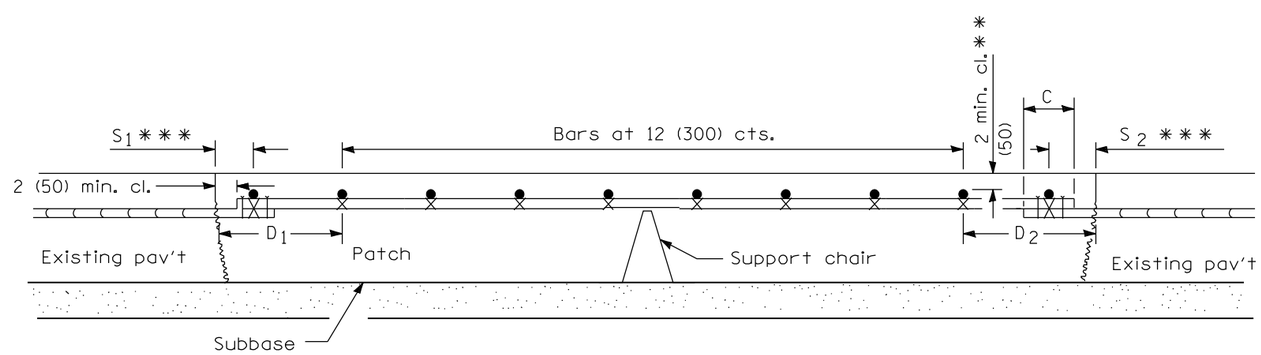

PATCHING DETAIL

* Every 3rd intersection must be tied.

** When the minimum clearance cannot be obtained with the transverse bar on top then the transverse rebar shall be tied to the bottom of the longitudinal rebar.

*** Variable: Where S_1 and S_2 are 2½ (65) min. and 12 (300) max. $D_1 = 2(S_1)$ and $D_2 = 2(S_2)$.

Illinois Department of Transportation

PASSED January 1, 2008
ENGINEER OF POLICY AND PROCEDURES
APPROVED January 1, 2008
ENGINEER OF DESIGN AND ENVIRONMENT

ISSUED 1-1-97

CLASS A PATCHES

(Sheet 2 of 2)

STANDARD 442001-04

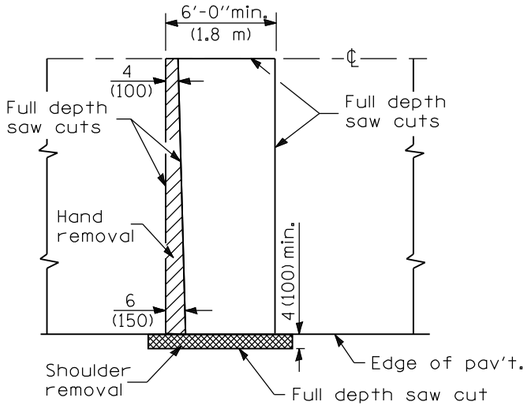

PAVEMENT SAWING DETAIL

(HMA SHOULDER)

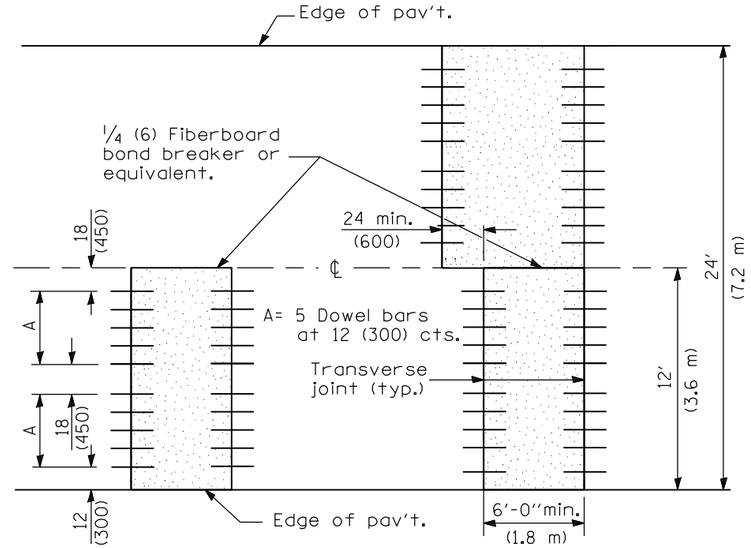

12' (3.6 m) WIDE LANES

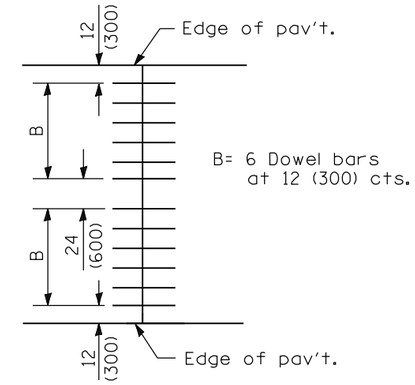

14' (4.2 m) WIDE RAMP

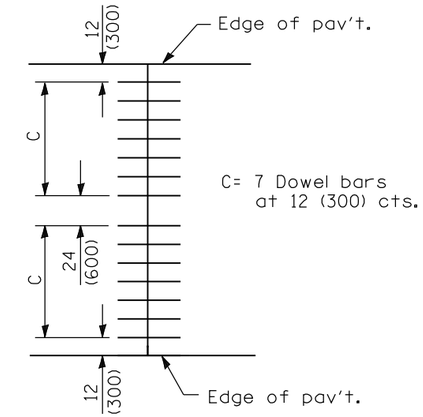

16' (4.8 m) WIDE RAMP

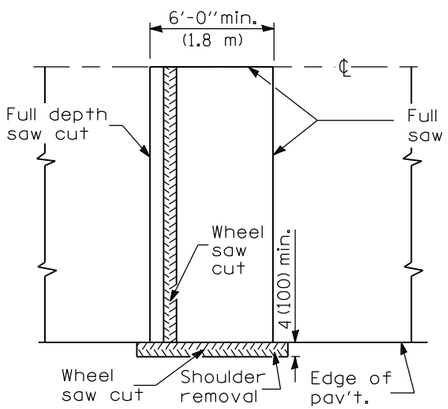

ALTERNATE SAWING DETAIL

(HMA SHOULDER)

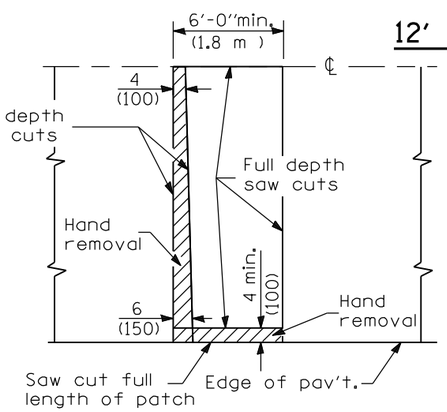

PAVEMENT SAWING DETAIL

(PCC SHOULDER)

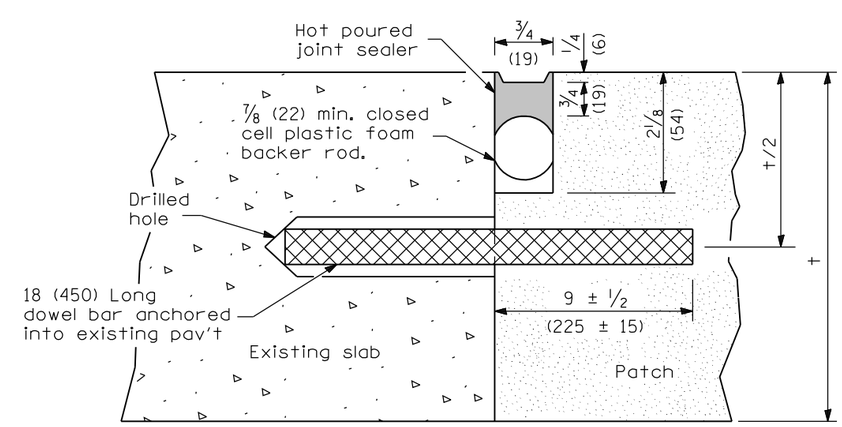

TRANSVERSE JOINT

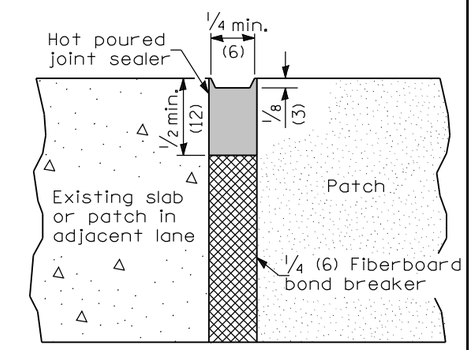

CENTERLINE JOINT

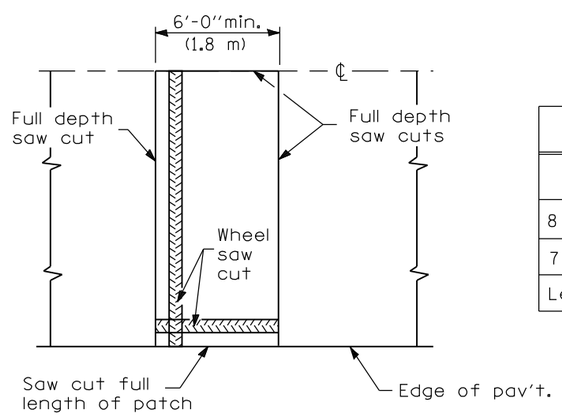

ALTERNATE SAWING DETAIL

(PCC SHOULDER)

DOWEL BAR TABLE		
PAVEMENT THICKNESS	DOWEL BAR DIAMETER	HOLE DIAMETER
8 (200) or greater	1 1/2 (38)	1 5/8 (41)
7 (180) thru 7.99 (199)	1 1/4 (32)	1 3/8 (35)
Less than 7 (180)	1 (25)	1 1/8 (29)

GENERAL NOTES

The transverse joints for Class B patches shall align with joints or cracks in the adjacent lane whenever possible.

See Standard 420701 for details of pavement fabric.

All dimensions are in inches (millimeters) unless otherwise shown.

Illinois Department of Transportation

PASSED January 1, 2008
ENGINEER OF POLICY AND PROCEDURES
APPROVED January 1, 2008
ENGINEER OF DESIGN AND ENVIRONMENT
ISSUED 1-1-97

DATE	REVISIONS
1-1-08	Switched units to English (metric).
1-1-07	Revised General Notes.

CLASS B PATCHES

(Sheet 1 of 2)

STANDARD 442101-07

TRANSVERSE EXPANSION JOINTS

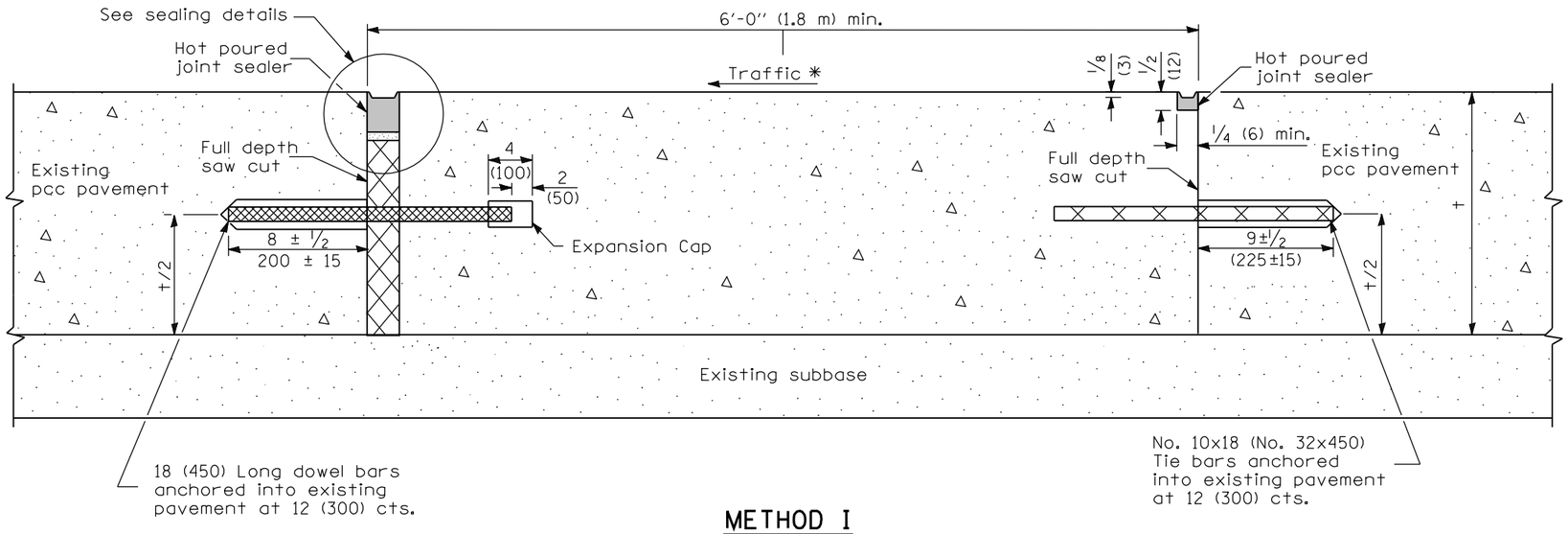

METHOD I

(Without Resurfacing)

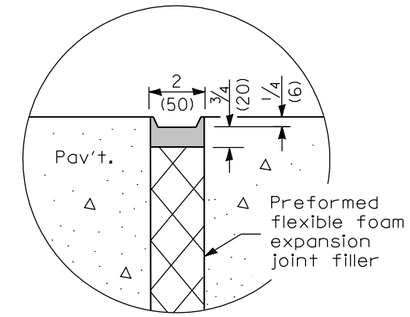

SEALING DETAIL

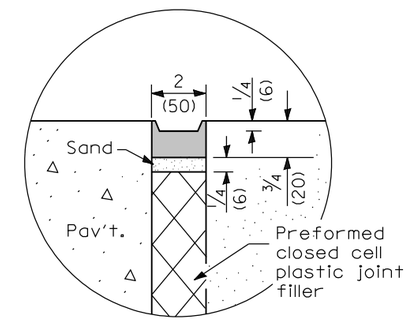

SEALING DETAIL

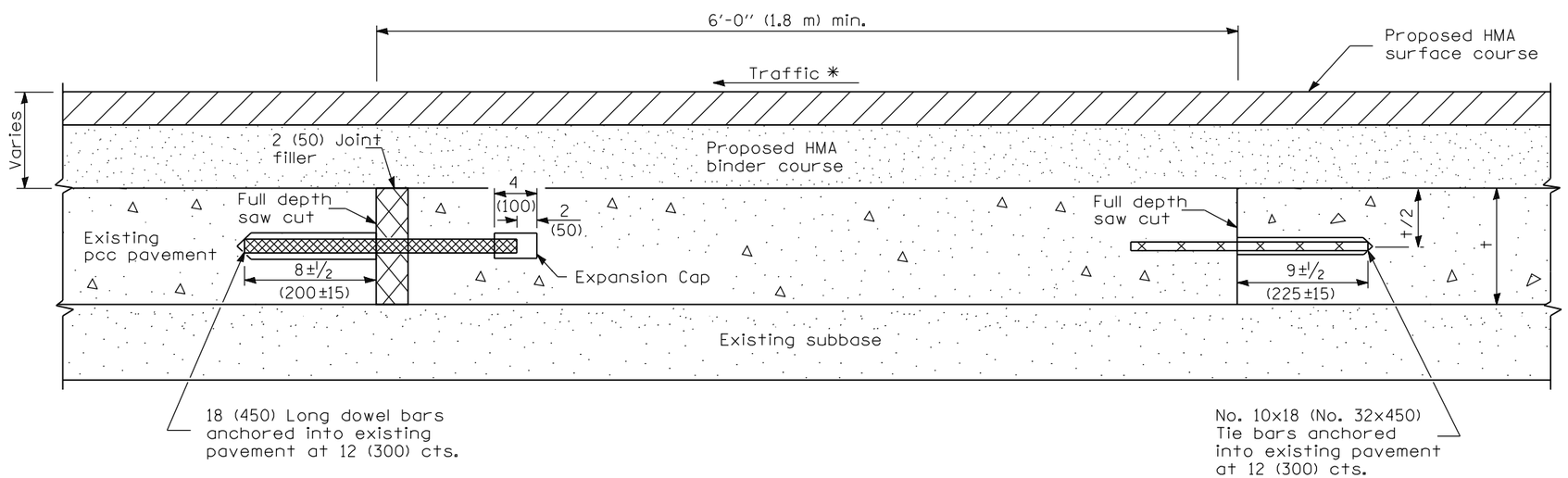

METHOD II

(With Resurfacing)

NOTE

* When re-establishing a transverse expansion joint on a two-lane, two-way road, reverse the orientation of the dowel bars with respect to traffic for one of the patches such that the joint will be continuous across both lanes.

Illinois Department of Transportation

PASSED January 1, 2008
ENGINEER OF POLICY AND PROCEDURES
APPROVED January 1, 2008
ENGINEER OF DESIGN AND ENVIRONMENT

ISSUED 1-1-97

CLASS B PATCHES

(Sheet 2 of 2)

STANDARD 442101-07

CLASS C

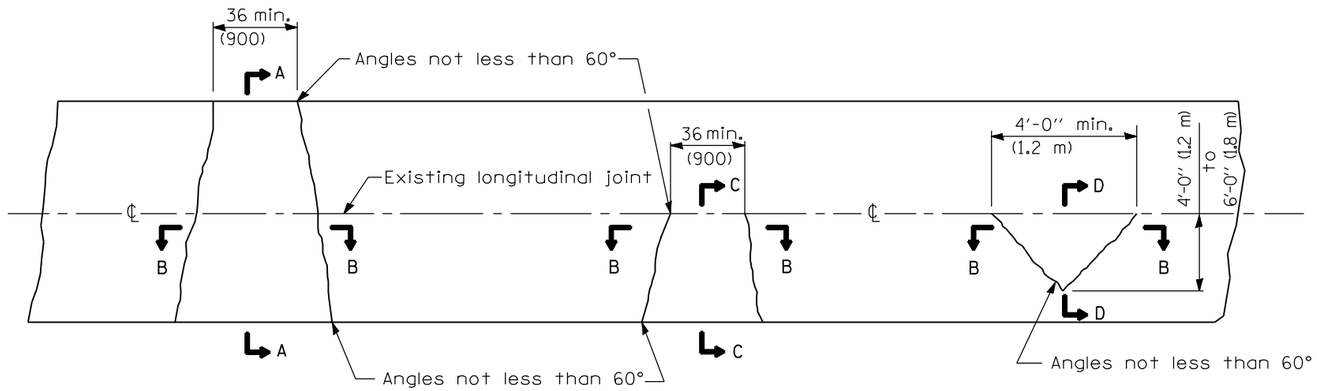

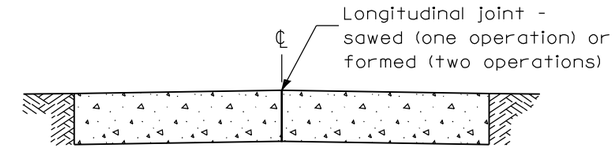

SECTION A-A

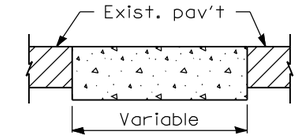

SECTION B-B

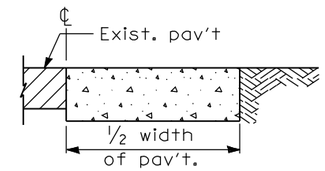

SECTION C-C

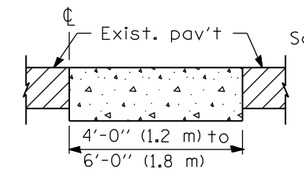

SECTION D-D

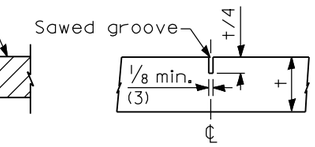

DETAIL OF SAWED CONTRACTION JOINT

NOTE

Longitudinal joints shall be as detailed on Standard 420001, except tie bars are not required for patches 20'-0" (6.0 m) or less in length.

CLASS D

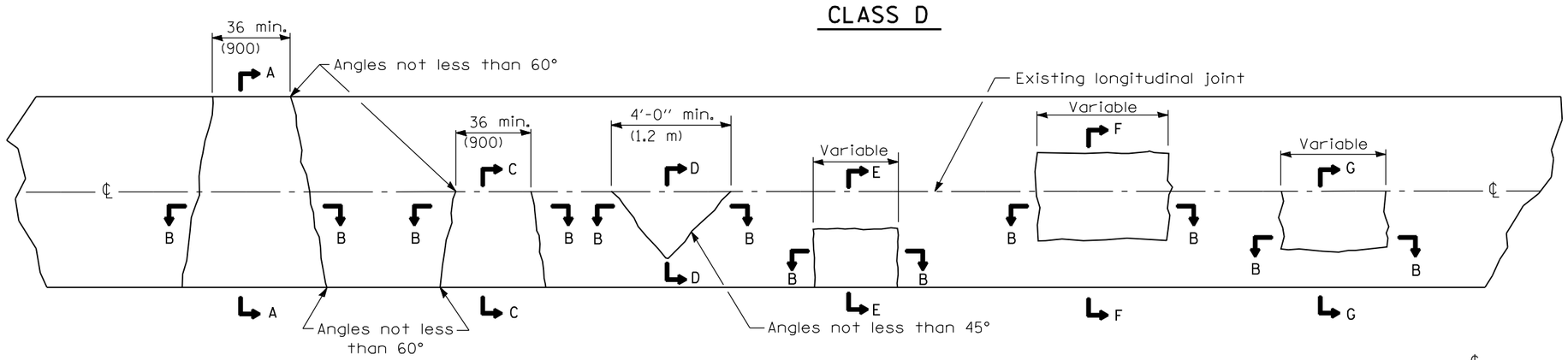

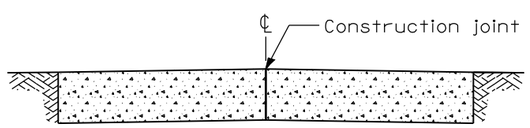

SECTION A-A
(Built in two operations)

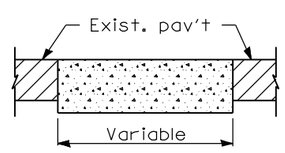

SECTION B-B

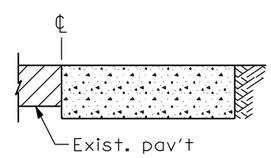

SECTION C-C

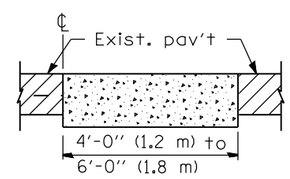

SECTION D-D

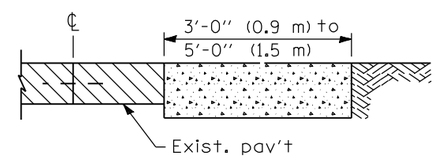

SECTION E-E

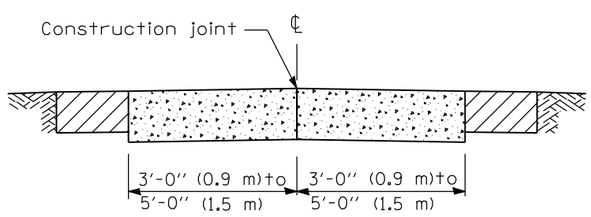

SECTION F-F
(Built in two operations)

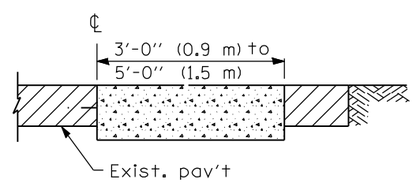

SECTION G-G

GENERAL NOTES

Existing tie bars shall be either cut or removed. Marginal bars shall be cut.

All dimensions are in inches (millimeters) unless otherwise shown.

Illinois Department of Transportation

PASSED January 1, 2008
ENGINEER OF POLICY AND PROCEDURES
APPROVED January 1, 2008
ENGINEER OF DESIGN AND ENVIRONMENT

ISSUED 1-1-97

DATE	REVISIONS
1-1-08	Switched units to English (metric).
1-1-07	Revised Note for Class C patches.

CLASS C and D PATCHES

STANDARD 442201-03

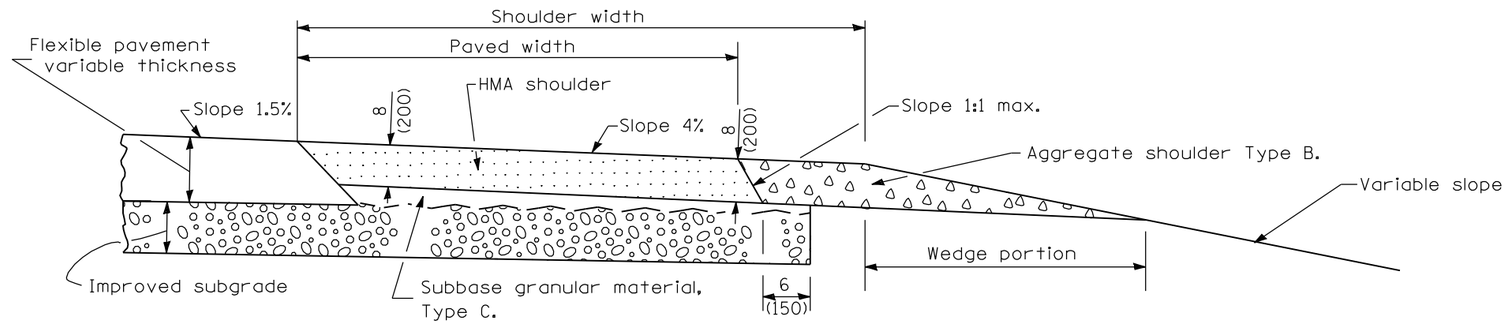

SHOULDER FOR TANGENT PAVEMENT

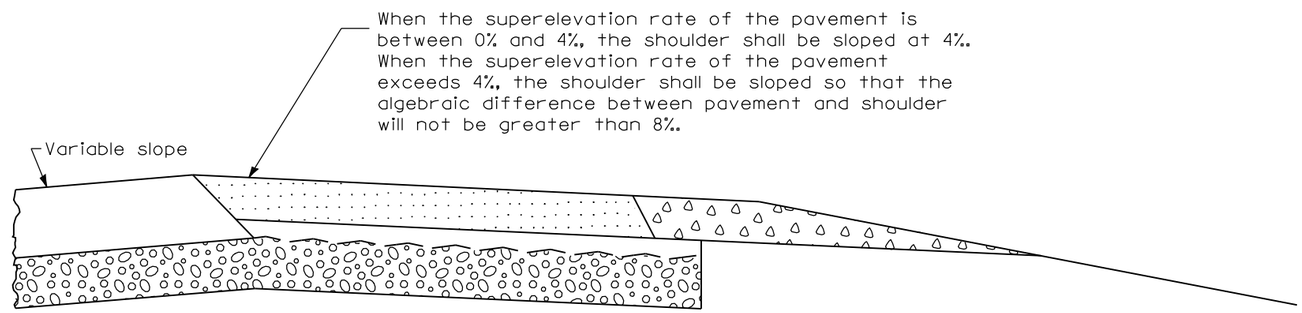

SHOULDER FOR SUPERELEVATED PAVEMENT
(OUTSIDE OF CURVE)

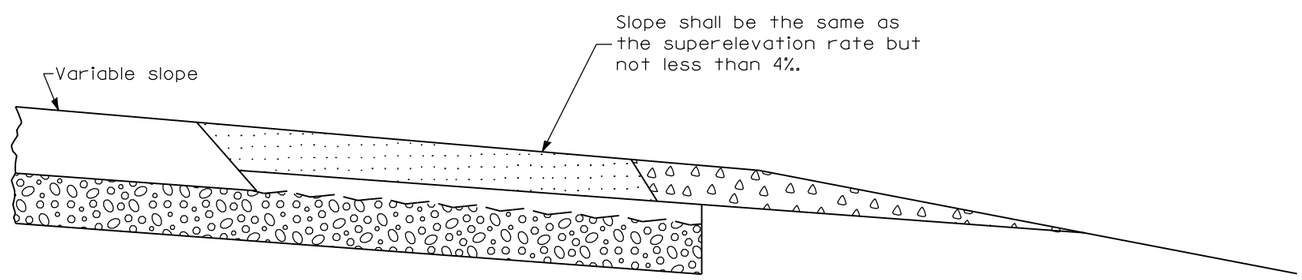

SHOULDER FOR SUPERELEVATED PAVEMENT
(INSIDE OF CURVE)

GENERAL NOTES

Except as noted or shown the dimensions and notes specified for the shoulder of tangent pavement are typical for the shoulders of superelevated pavement.

All dimensions are in inches (millimeters) unless otherwise shown.

Illinois Department of Transportation

PASSED January 1, 2008
ENGINEER OF POLICY AND PROCEDURES
APPROVED January 1, 2008
ENGINEER OF DESIGN AND ENVIRONMENT

ISSUED 1-1-97

DATE	REVISIONS
1-1-08	Switched units to
	English (metric).
1-1-07	Switched to Hot-Mix
	Asphalt (HMA)
	terminology.

HMA SHOULDER ADJACENT TO FLEXIBLE PAVEMENT

STANDARD 482001-02

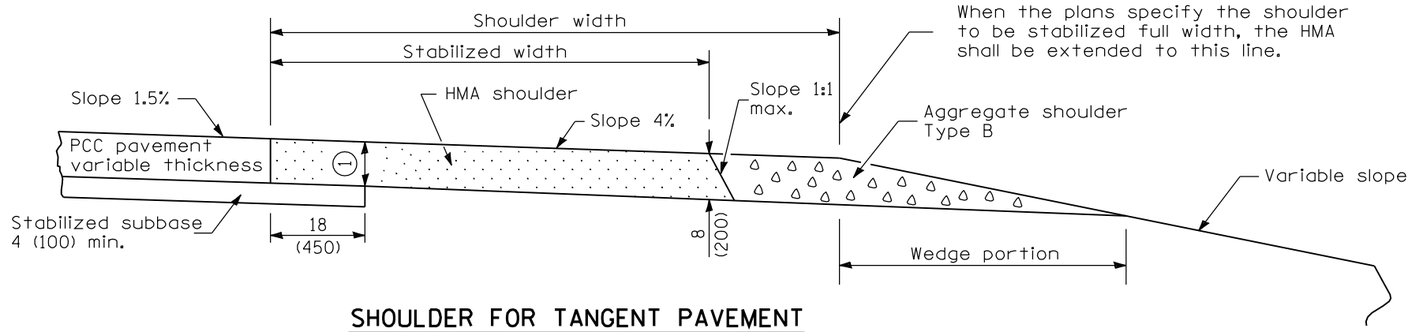

SHOULDER FOR TANGENT PAVEMENT

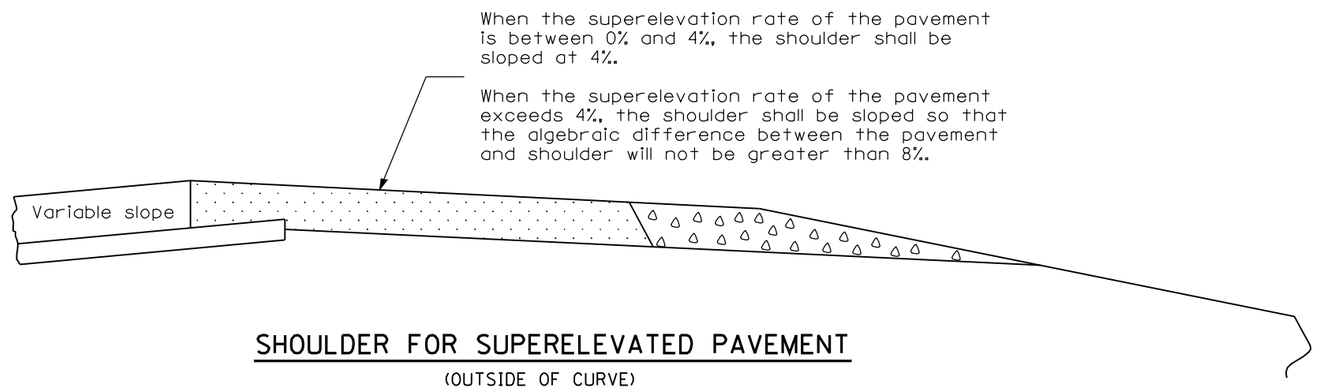

SHOULDER FOR SUPERELEVATED PAVEMENT

(OUTSIDE OF CURVE)

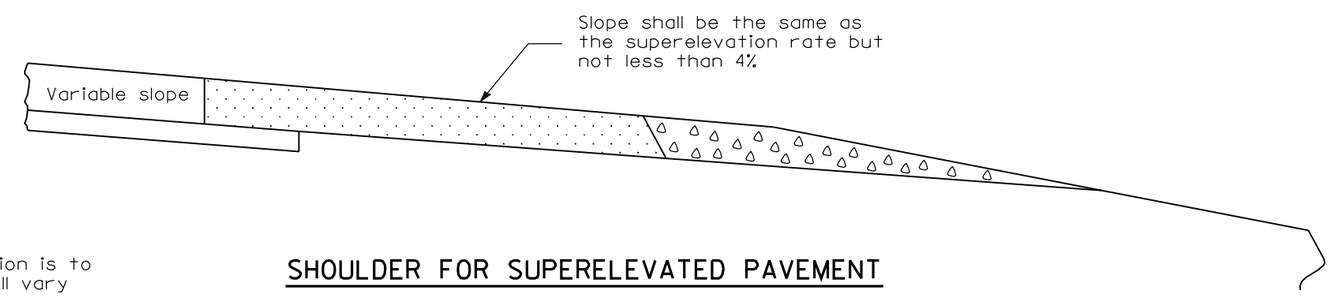

SHOULDER FOR SUPERELEVATED PAVEMENT

(INSIDE OF CURVE)

NOTE

(1) (Applies only when subbase extension is to remain in place.) This thickness will vary with the thickness of pavement, extended length of subbase, and the slope of pavement. When this thickness is less than 8 (200), the stabilized shoulder shall be stepped down at this line to provide a 8 (200) minimum thickness.

GENERAL NOTES

Except as noted or shown the dimensions and notes specified for the shoulder of tangent pavement are typical for the shoulders of superelevated pavement.

All slope ratios are expressed as units of vertical displacement to units of horizontal displacement (V:H).

All dimensions are in inches (millimeters) unless otherwise shown.

Illinois Department of Transportation

PASSED January 1, 2008
ENGINEER OF POLICY AND PROCEDURES
APPROVED January 1, 2008
ENGINEER OF DESIGN AND ENVIRONMENT

ISSUED 1-1-97

DATE	REVISIONS
1-1-08	Switched units to
	English (metric).
1-1-07	Switched to Hot-Mix
	Asphalt (HMA)
	terminology.

HMA SHOULDER ADJACENT TO RIGID PAVEMENT

STANDARD 482006–03

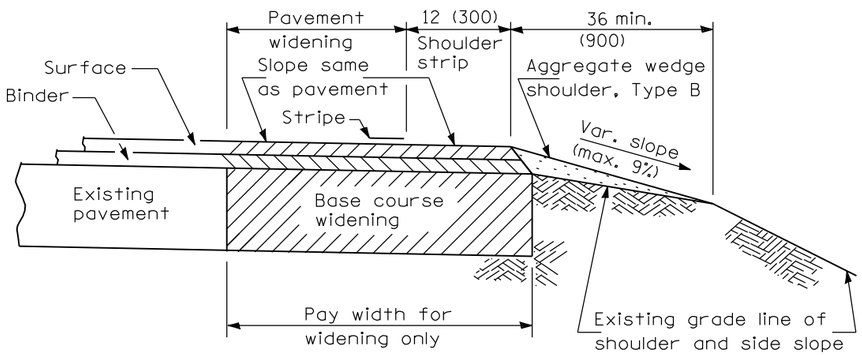

HMA SHOULDER STRIP AND AGGREGATE WEDGE WITH WIDENING

(Cross-section A)

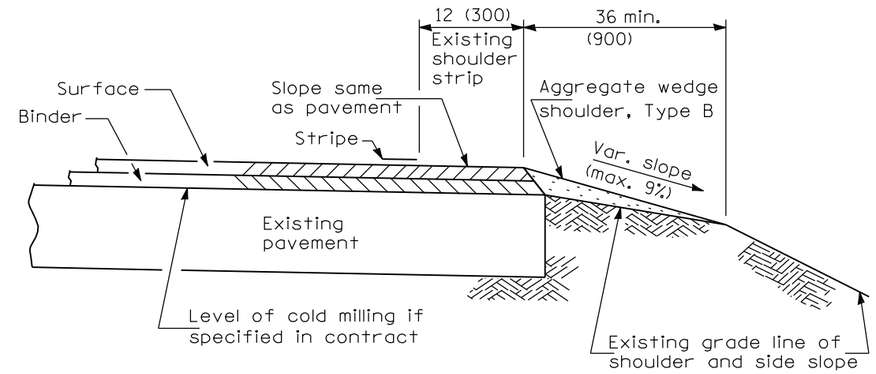

COLD MILLING AND/OR RESURFACING OF EXISTING PAVEMENT WITH SHOULDER STRIPS

(Cross-section C)

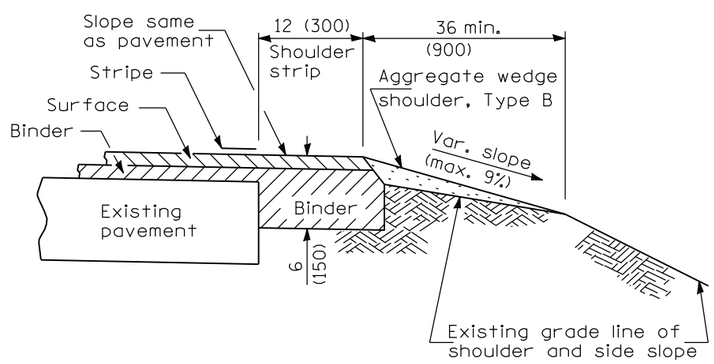

HMA SHOULDER STRIP AND AGGREGATE WEDGE WITH RESURFACING

(Cross-section B)

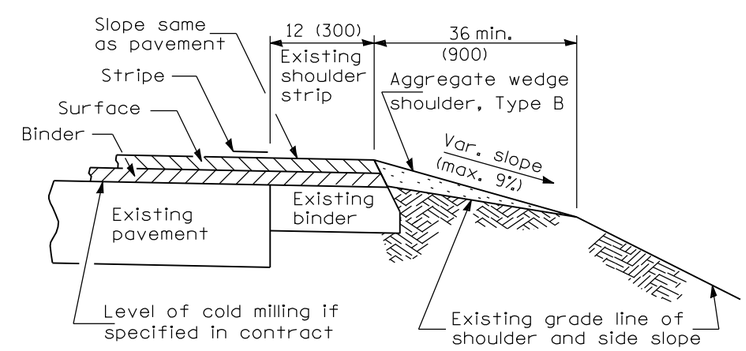

COLD MILLING AND/OR RESURFACING OF EXISTING PAVEMENT WITH SHOULDER STRIPS

(Cross-section D)

All dimensions are in inches (millimeters) unless otherwise shown.

Illinois Department of Transportation

PASSED January 1, 2008
ENGINEER OF POLICY AND PROCEDURES

APPROVED January 1, 2008
ENGINEER OF DESIGN AND ENVIRONMENT

ISSUED 1-1-97

DATE	REVISIONS
1-1-08	Switched units to
	English (metric).
1-1-07	Switched to Hot-Mix
	Asphalt (HMA)
	terminology.

HMA SHLD. STRIPS/SHLDS. WITH RESURFACING OR WIDENING AND RESURFACING PROJECTS

(Sheet 1 of 2)

STANDARD 482011-03

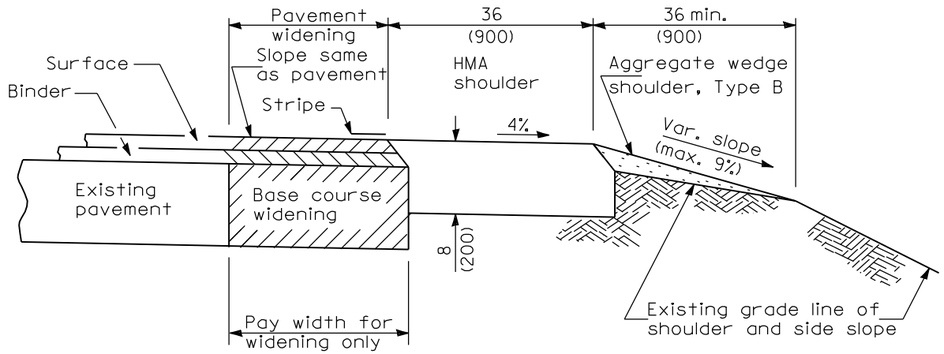

HMA SHOULDER AND AGGREGATE WEDGE WITH WIDENING

(Cross-section E)

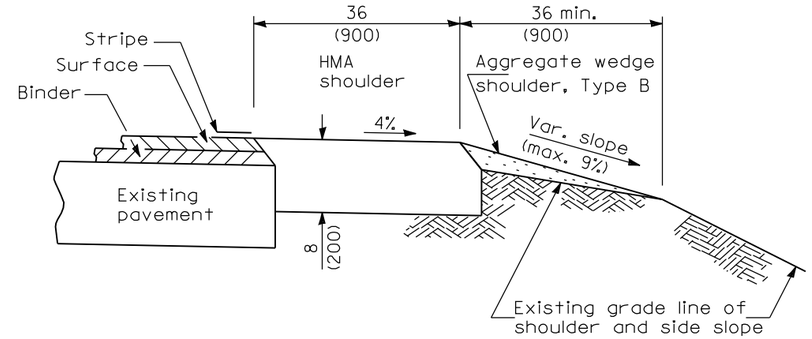

HMA SHOULDER AND AGGREGATE WEDGE WITH RESURFACING

(Cross-section G)

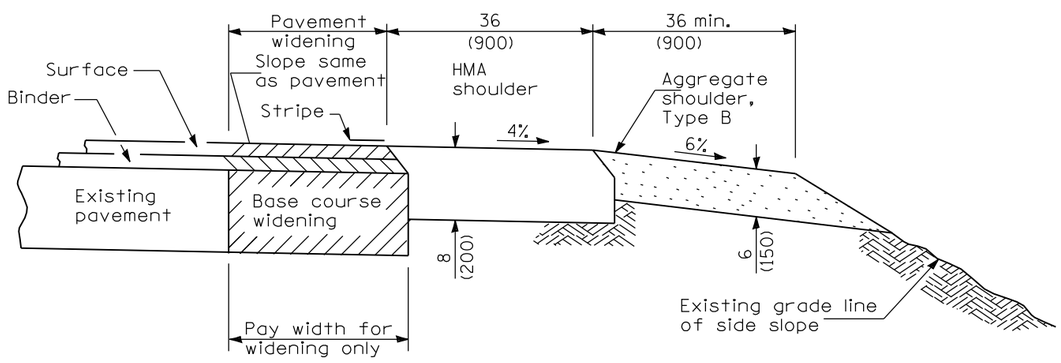

HMA AND AGGREGATE SHOULDERS WITH WIDENING

(Cross-section F)

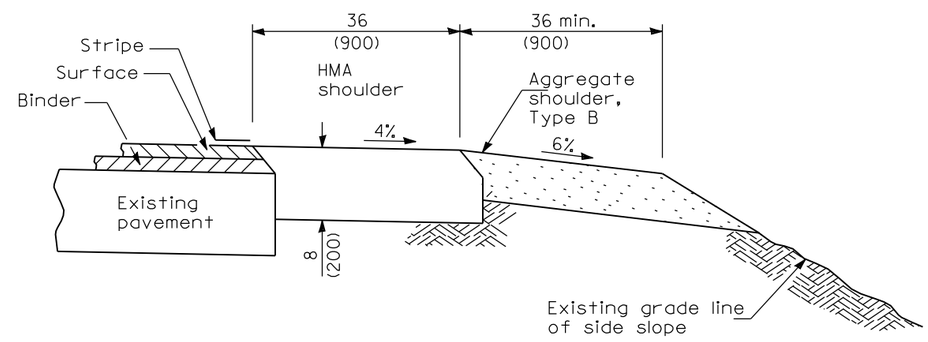

HMA AND AGGREGATE SHOULDERS WITH RESURFACING

(Cross-section H)

Illinois Department of Transportation

PASSED January 1, 2008

ENGINEER OF POLICY AND PROCEDURES

APPROVED January 1, 2008

ENGINEER OF DESIGN AND ENVIRONMENT

ISSUED 1-1-97

HMA SHLD. STRIPS/SHLDS. WITH RESURFACING OR WIDENING AND RESURFACING PROJECTS

(Sheet 2 of 2)

STANDARD 482011-03

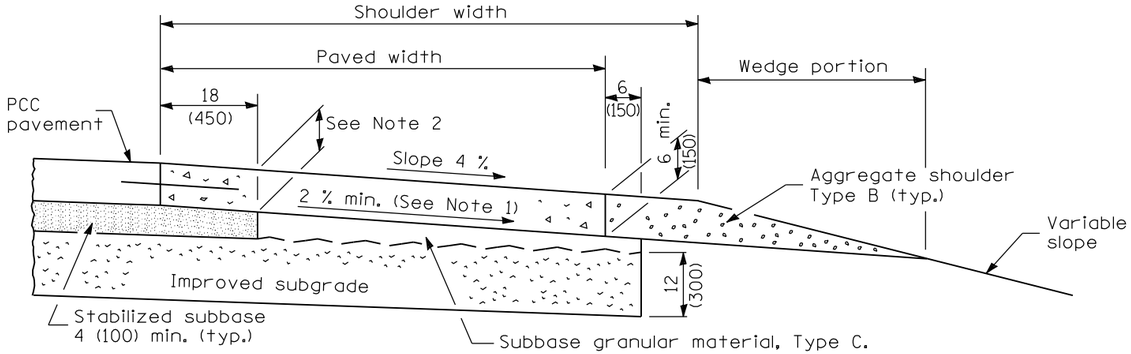

SHOULDER FOR TANGENT PAVEMENT

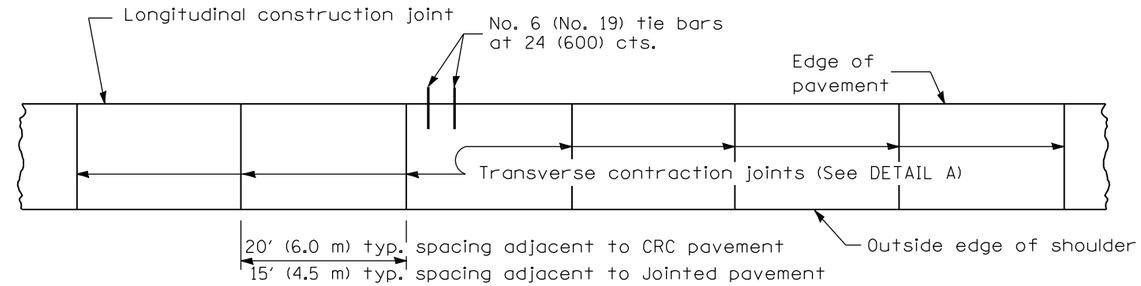

PLAN

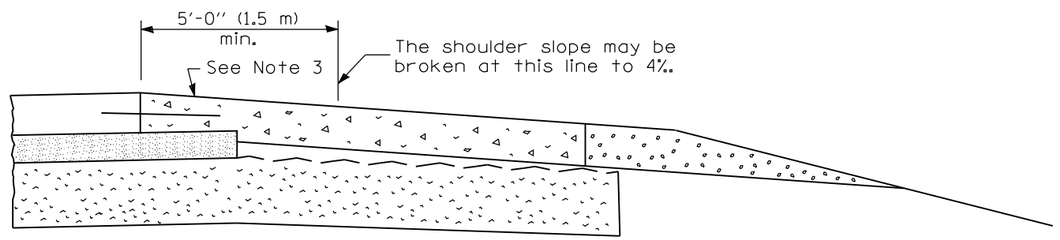

SHOULDER FOR SUPERELEVATED PAVEMENT

(Outside of curve)

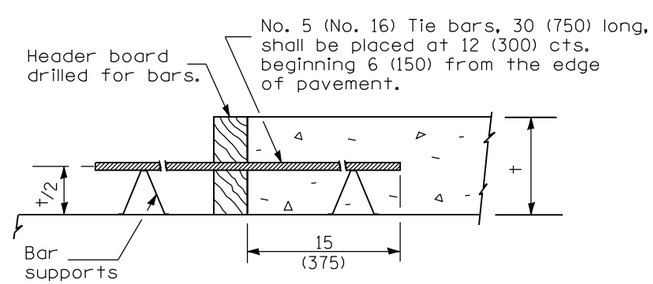

TRANSVERSE CONSTRUCTION JOINT

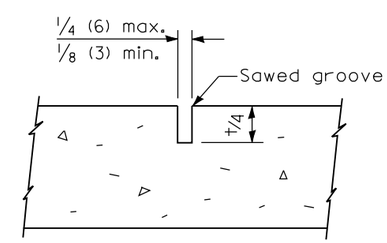

DETAIL A

TRANSVERSE CONTRACTION JOINT

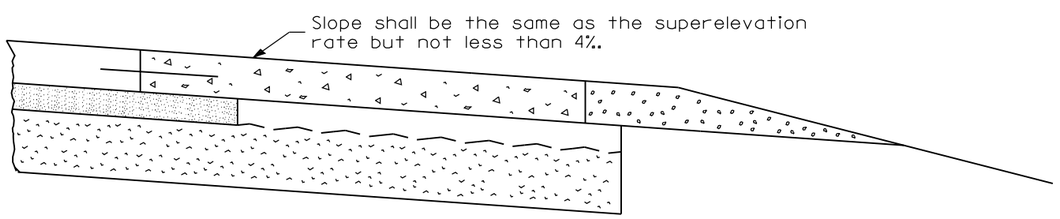

SHOULDER FOR SUPERELEVATED PAVEMENT

(Inside of curve)

NOTES

Note 1: Does not apply when sub-surface drains are installed.

Note 2: When the subbase is not removed, this thickness will vary with the thickness of pavement, extended length of subbase, and the slope of pavement. When this thickness is less than 6 (150), the paved shoulder shall be stepped down at this line to provide a 6 (150) minimum thickness.

Note 3: When the superelevation rate of the pavement is between 0% and 4%, the shoulder shall be sloped at 4%. When the superelevation rate of the pavement exceeds 4%, the shoulder shall be sloped so that the algebraic difference between the pavement and shoulder slopes will not be greater than 8%.

GENERAL NOTES

Except as noted or shown, the dimensions and notes specified for the shoulder of the tangent pavement are typical for the shoulders of superelevated pavement.

Transverse expansion joints shall be as detailed on Standard 420001 except that dowel bars will not be required.

See Standard 420001 for details not shown.

All dimensions are in inches (millimeters) unless otherwise shown.

Illinois Department of Transportation

PASSED January, 1 2008
ENGINEER OF POLICY AND PROCEDURES
APPROVED January 1, 2008
ENGINEER OF DESIGN AND ENVIRONMENT

ISSUED 1-1-97

DATE	REVISIONS
1-1-08	Switched units to English (metric).
1-1-07	Required subbase gran. material, Type C under shoulder.

PCC SHOULDER

STANDARD 483001-04

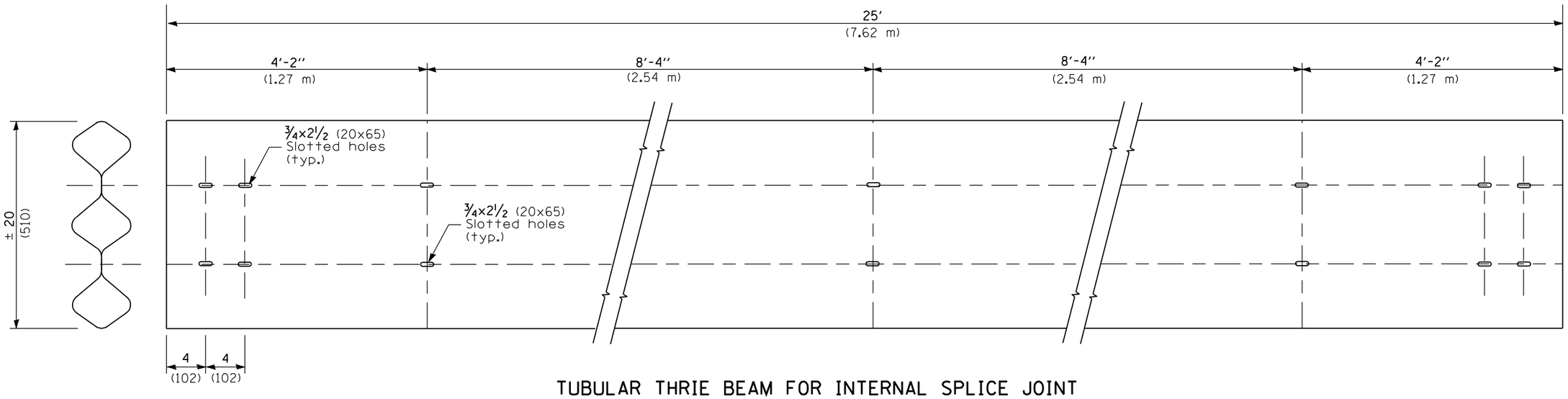

TUBULAR THRIE BEAM FOR INTERNAL SPLICE JOINT

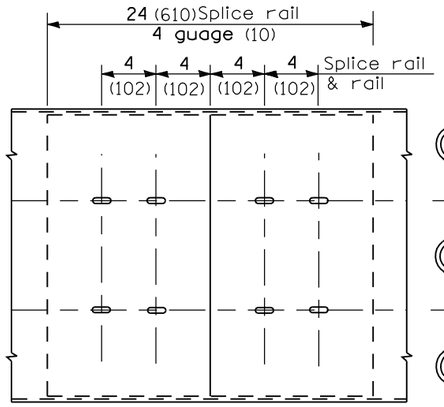

INTERNAL SPLICE JOINT

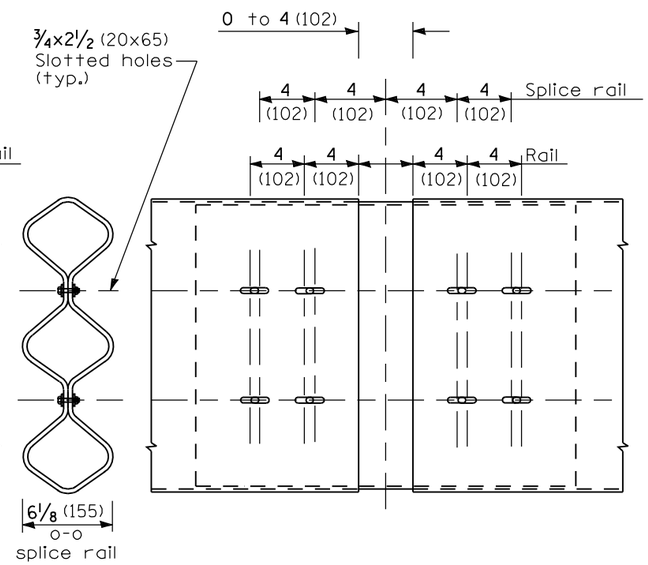

INTERNAL EXPANSION SPLICE JOINT

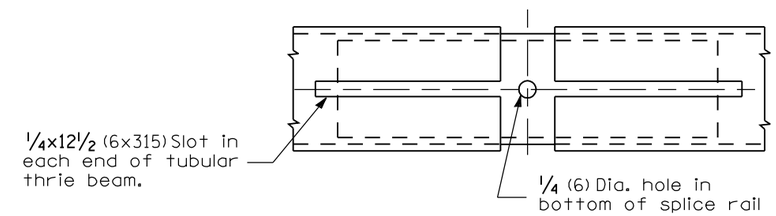

BOTTOM VIEW OF INTERNAL EXPANSION SPLICE JOINT

GENERAL NOTES

Plate Washers B are to be placed under both heads and nuts of splicing bolts for internal splice and internal expansion splice joint.

Plate Washers C are to be placed under both heads and nuts of splicing bolts for lap expansion and internal lap splice joint.

See Standard 630001 for details of guardrail not shown.

All dimensions are in inches (millimeters) unless otherwise shown.

Illinois Department of Transportation

PASSED January 1, 2009
ENGINEER OF POLICY AND PROCEDURES

APPROVED January 1, 2009
ENGINEER OF DESIGN AND ENVIRONMENT

ISSUED 1-1-97

DATE	REVISIONS
1-1-09	Switched units to
	English (metric). Added
	Plate Washer F detail.
1-1-97	Renum. Standard 2348-3.
	Deleted DN Symbol.

TUBULAR THRIE BEAM RETROFIT RAIL FOR BRIDGES (Sheet 1 of 3)

STANDARD 509001-01

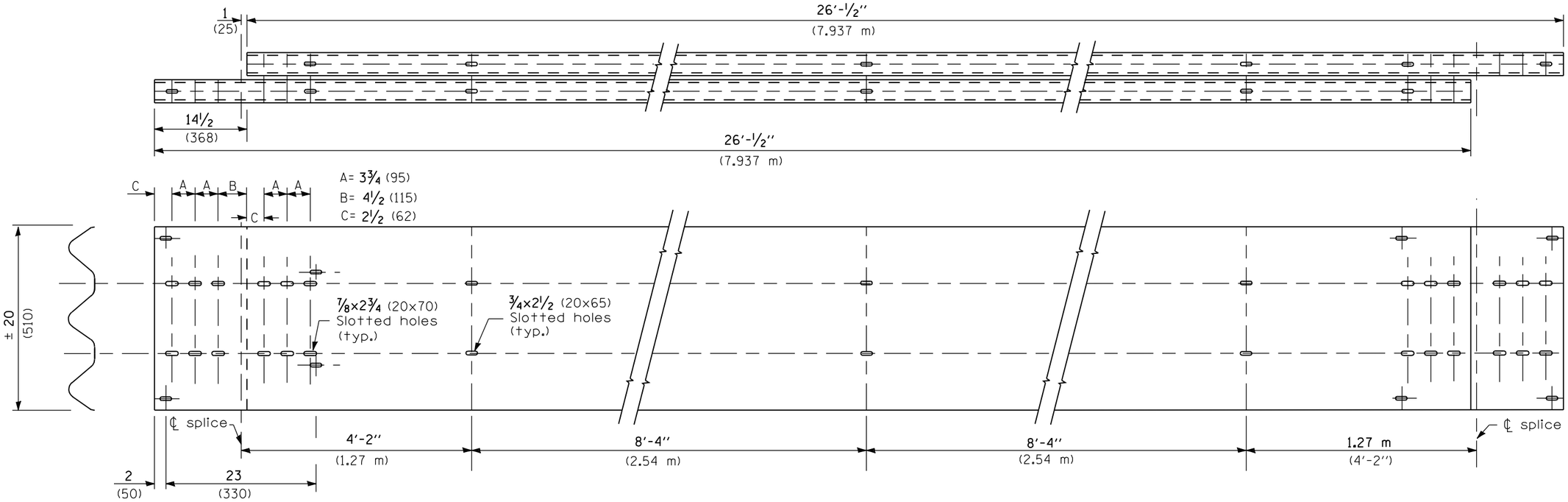

TUBULAR THRIE BEAM FOR LAP SPLICE JOINT

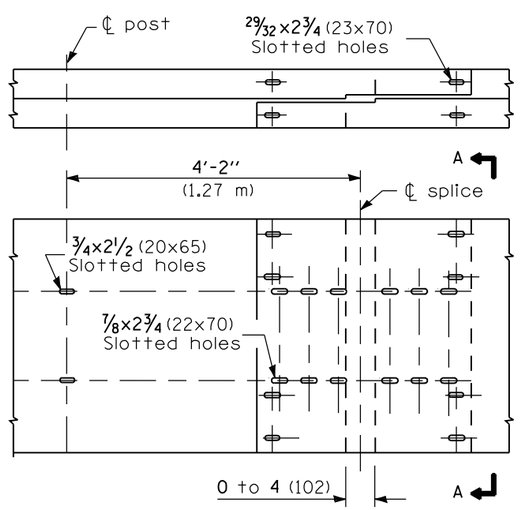

LAP EXPANSION SPLICE JOINT

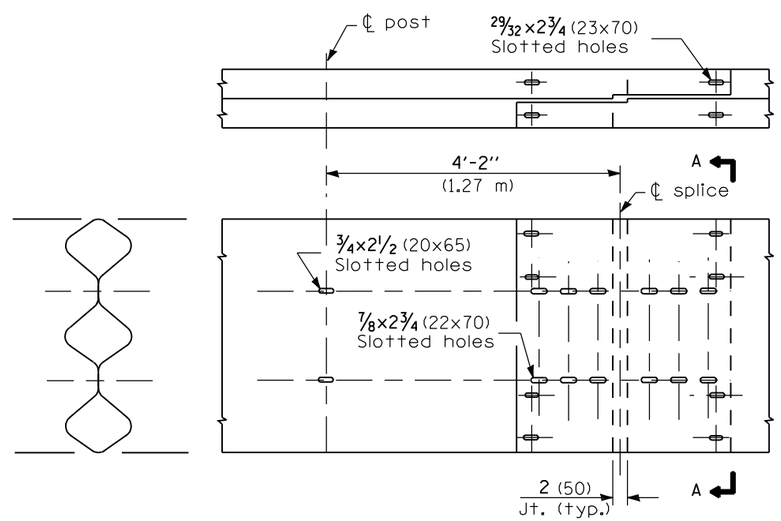

LAP SPLICE JOINT

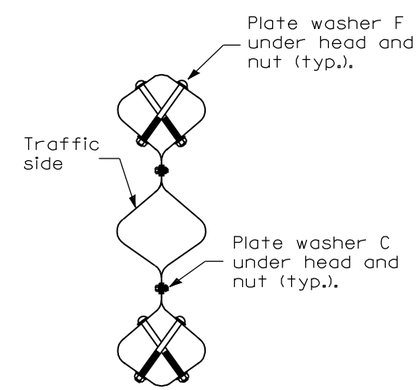

SECTION A-A

Illinois Department of Transportation

PASSED January 1, 2009

ENGINEER OF POLICY AND PROCEDURES

APPROVED January 1, 2009

ENGINEER OF DESIGN AND ENVIRONMENT

ISSUED 1-1-97

TUBULAR THRIE BEAM RETROFIT RAIL FOR BRIDGES (Sheet 2 of 3)

STANDARD 509001-01

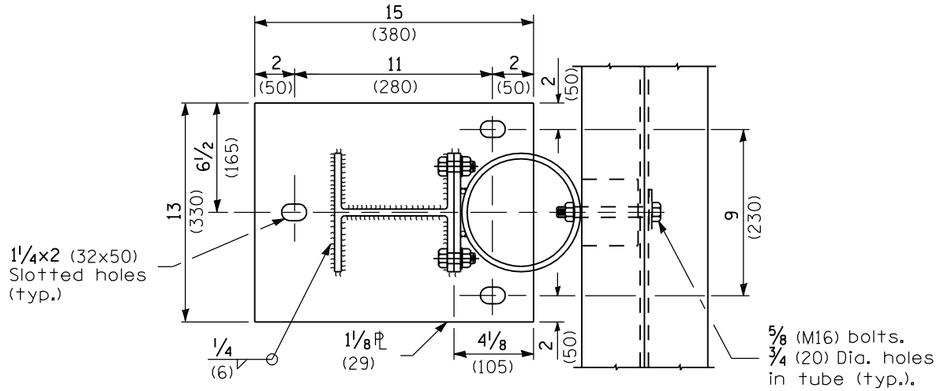

SECTION B-B

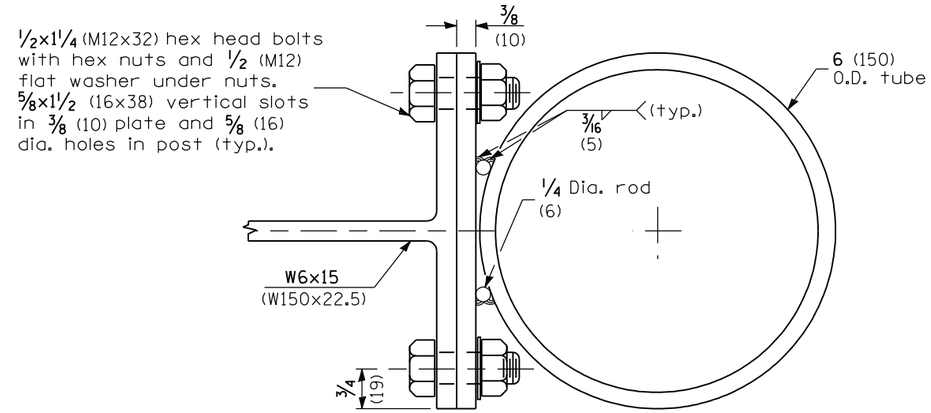

TUBE TO POST ATTACHMENT

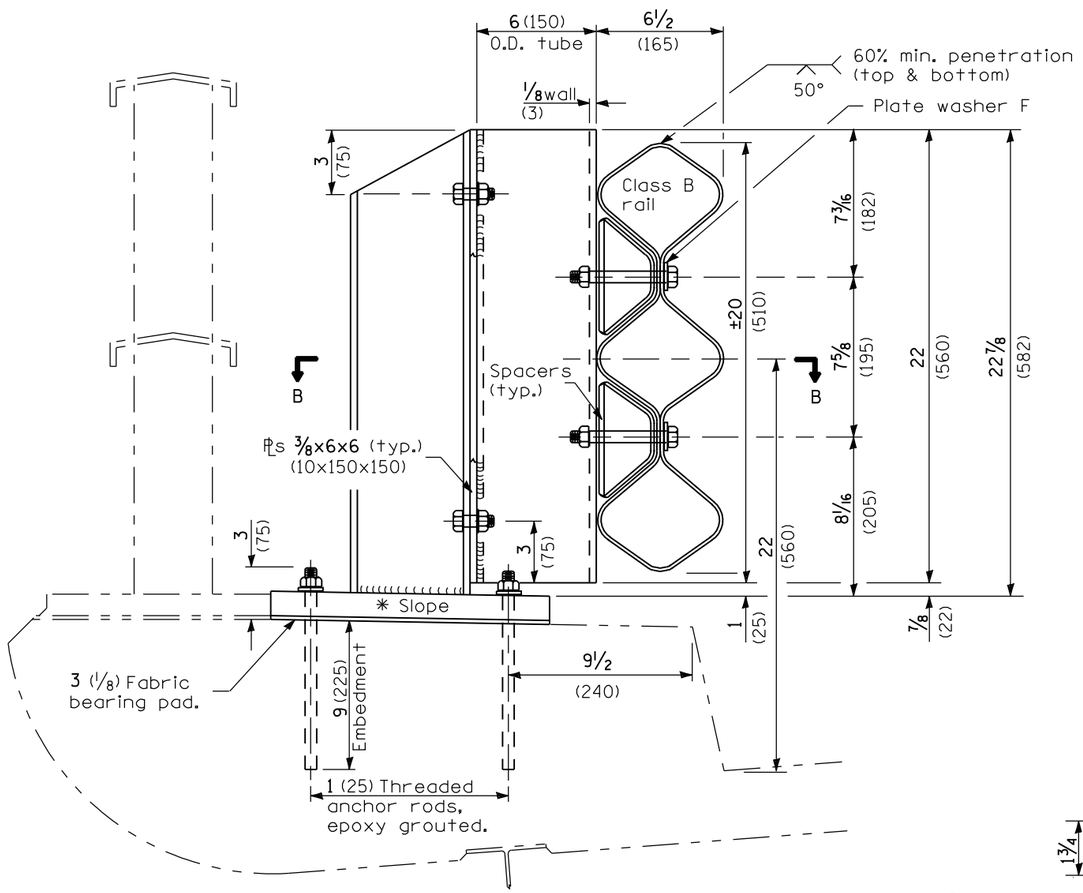

POST

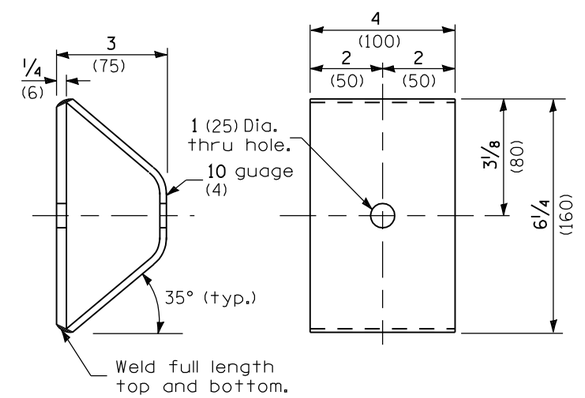

SPACER

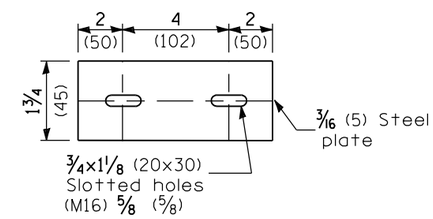

PLATE WASHER B

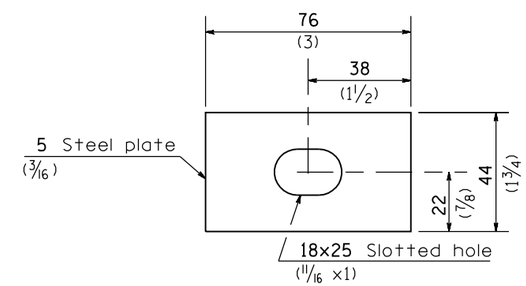

PLATE WASHER F

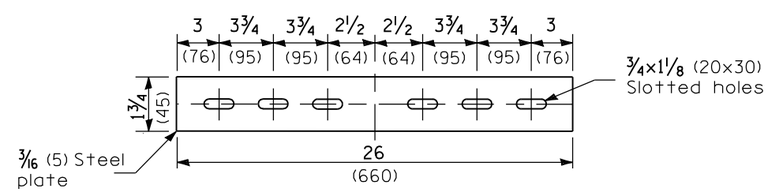

PLATE WASHER C

12 : ¼

* Cut bottom of post to slope

Illinois Department of Transportation

PASSED January 1, 2009
ENGINEER OF POLICY AND PROCEDURES

APPROVED January 1, 2009
ENGINEER OF DESIGN AND ENVIRONMENT

ISSUED 1-1-97

TUBULAR THRIE BEAM RETROFIT RAIL FOR BRIDGES (Sheet 3 of 3)

STANDARD 509001-01

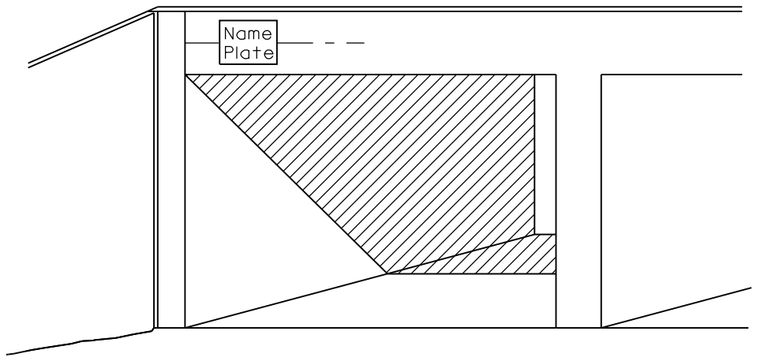

FOR MULTI-SPAN CULVERTS

(Unless otherwise noted on the plans, name plates are not required for structures less than 20' (6.1 m) in length)

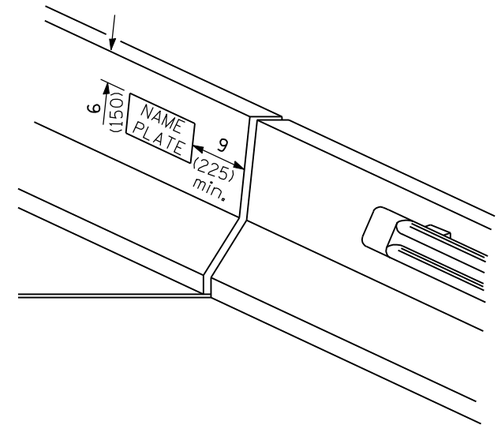

FOR PARAPET AND END POST MOUNTED

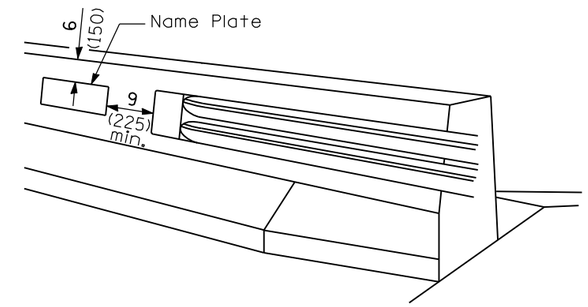

FOR PARAPET

(When Dog Ear Wing is used)

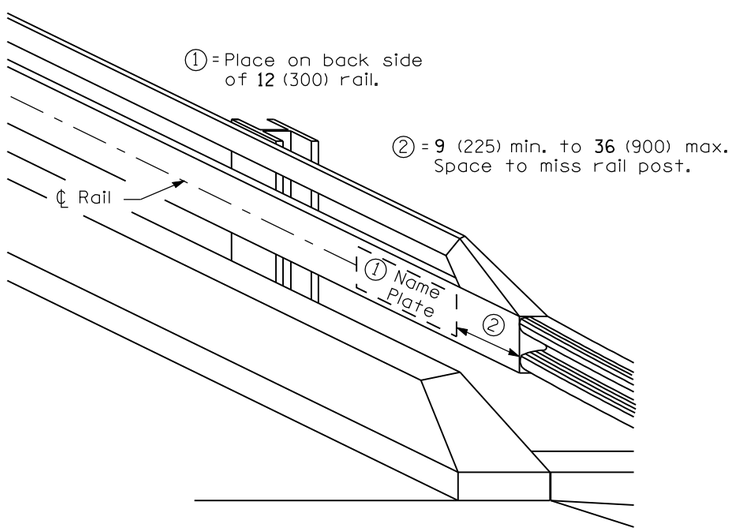

FOR STEEL RAILS

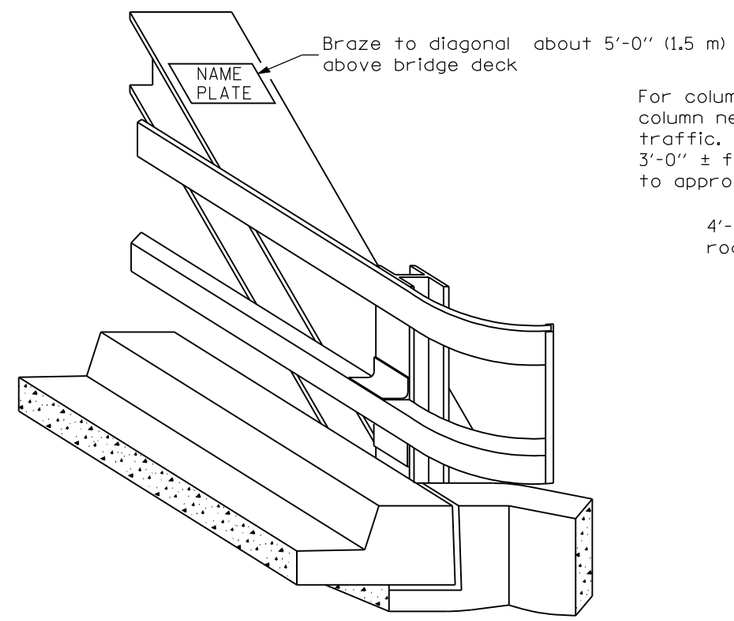

FOR TRUSSES

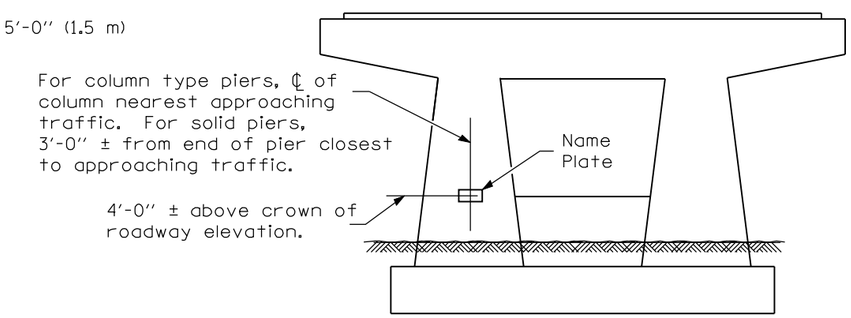

FOR PIERS ON FAI ROUTES

GENERAL NOTES

On one-way traffic structures, place name plate on right side of approach end. On two-way traffic structures, place name plate on right side of approach end while looking in the direction of increasing stationing.

All dimensions are in inches (millimeters) unless otherwise shown.

Illinois Department of Transportation

APPROVED January 1, 2009
Ralph E. Anderson
ENGINEER OF BRIDGES AND STRUCTURES

APPROVED January 1, 2009
Eric L. Harm
ENGINEER OF DESIGN AND ENVIRONMENT

ISSUED 1-1-97

DATE	REVISIONS
1-1-09	Switched units to
	English (metric). Added
	pier detail.
1-1-02	Remove Placing: note on
	sht. 2. Added Braze to
	diag. note on sht. 1.

NAME PLATE FOR BRIDGES

(Sheet 1 of 2)

STANDARD 515001-03

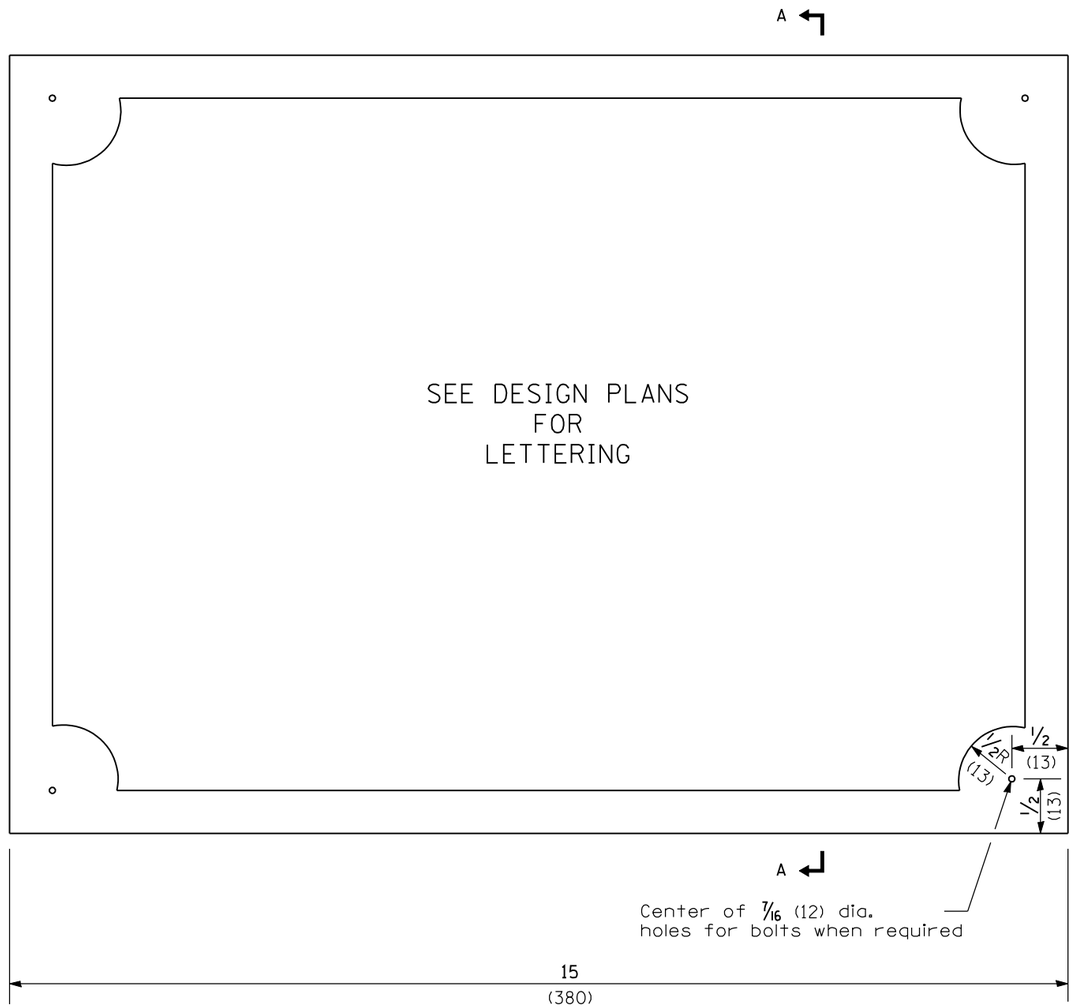

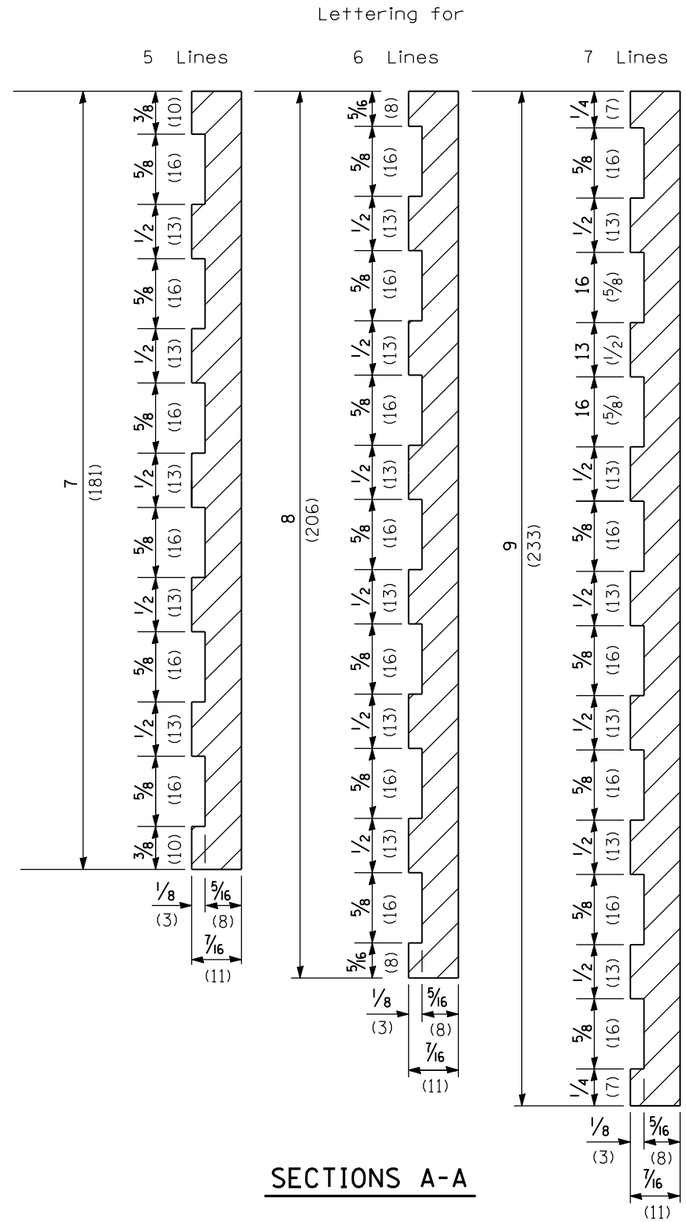

SECTIONS A-A

NOTE

Border and lettering:
Raised 1/8 (3) , square cut and not tapered.

Illinois Department of Transportation

APPROVED January 1, 2009
Ralph E. Anderson
ENGINEER OF BRIDGES AND STRUCTURES

APPROVED January 1, 2009
Eric E. Harm
ENGINEER OF DESIGN AND ENVIRONMENT

ISSUED 1-1-97

NAME PLATE FOR BRIDGES

(Sheet 2 of 2)

STANDARD 515001-03

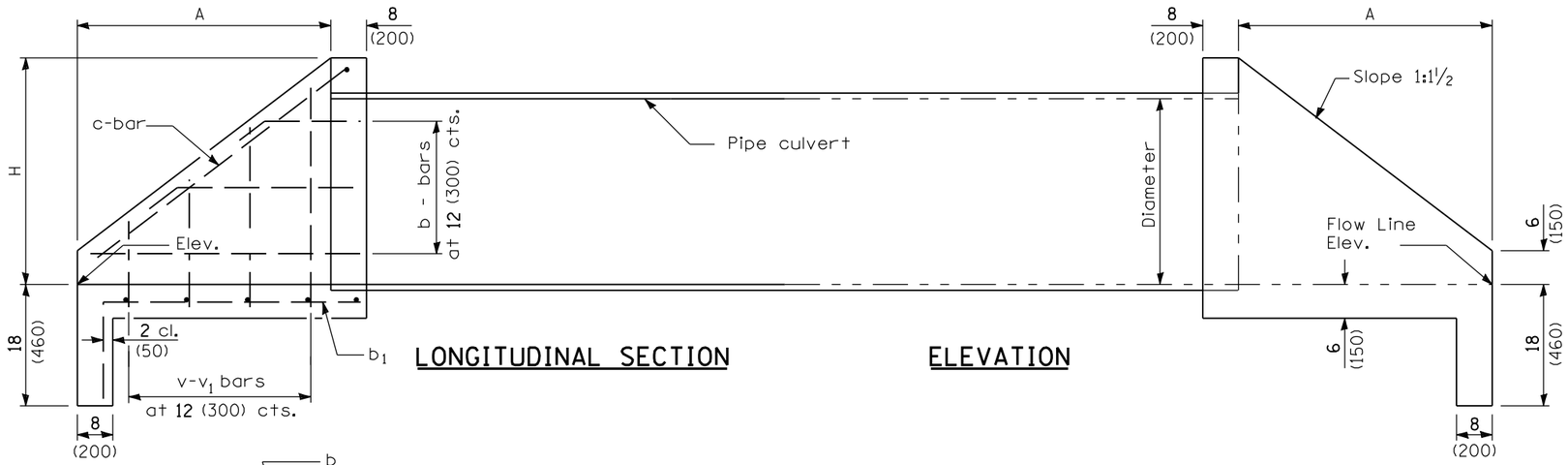

LONGITUDINAL SECTION

ELEVATION

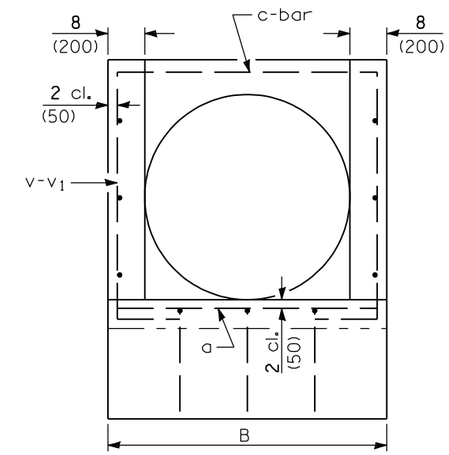

END ELEVATION

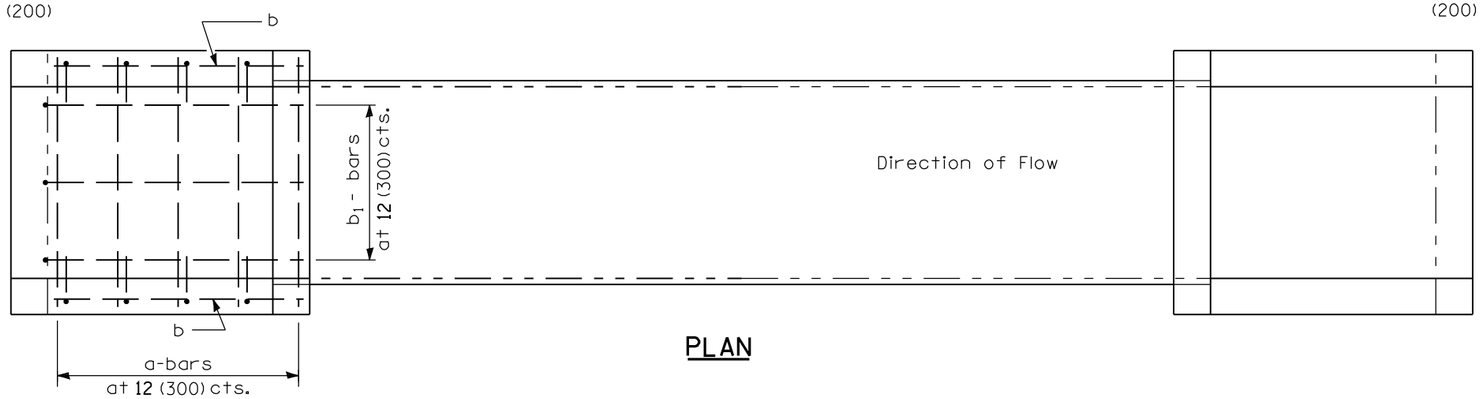

PLAN

Pipe Dia. (nom.)	A	B	H	Reinforcing Steel No. 4 (No. 13) bars						Concrete 2 End Secs. cu. yds. (m^3)	Reinf. Bars 2 End Secs. lbs. (kg)
				a	b	b_1	c	v	v_1		
12 (300)	18 (460)	28 (710)	18 (460)	4 @ 24 4 @ (610)	4 @ 21 4 @ (540)	4 @ 31 4 @ (790)	2 @ 5′-9″ 2 @ (1.75 m)	4 @ 30 4 @ (760)	4 @ 21 4 @ (530)	0.59 (0.45)	40 (18.1)
15 (375)	24 (570)	31 (780)	21 (535)	4 @ 27 4 @ (690)	4 @ 27 4 @ (690)	4 @ 39 4 @ (990)	2 @ 7′-0″ 2 @ (2.13 m)	4 @ 33 4 @ (840)	4 @ 24 4 @ (610)	0.77 (0.59)	40 (18.1)
18 (450)	27 (685)	34 (860)	24 (610)	6 @ 30 6 @ (760)	8 @ 30 8 @ (760)	4 @ 3′-6″ 4 @ (1.07 m)	2 @ 8′-0″ 2 @ (2.44 m)	4 @ 36 4 @ (910)	4 @ 27 4 @ (690)	0.92 (0.70)	60 (27.2)
24 (600)	36 (915)	3′-4″ (1.01 m)	30 (760)	6 @ 36 6 @ (910)	8 @ 39 8 @ (990)	6 @ 4′-3″ 6 @ (1.2 m)	2 @ 10′-6″ 2 @ (3.2 m)	8 @ 3′-6″ 8 @ (1.07 m)	4 @ 30 4 @ (760)	1.32 (1.01)	90 (40.8)
30 (750)	3′-9″ (1.14 m)	3′-10″ (1.16 m)	36 (915)	8 @ 3′-6″ 8 @ (1.07 m)	12 @ 4′-0″ 12 @ (1.22 m)	6 @ 5′-0″ 6 @ (1.52 m)	2 @ 12′-6″ 2 @ (3.81 m)	8 @ 4′-0″ 8 @ (1.22 m)	4 @ 36 4 @ (910)	1.79 (1.37)	120 (54.4)
36 (900)	4′-6″ (1.37 m)	4′-4″ (1.32 m)	3′-6″ (1.07 m)	10 @ 4′-0″ 10 @ (1.22 m)	12 @ 4′-9″ 12 @ (1.45 m)	6 @ 5′-9″ 6 @ (1.75 m)	2 @ 15′-0″ 2 @ (4.57 m)	8 @ 4′-6″ 8 @ (1.37 m)	8 @ 3′-6″ 8 @ (1.07 m)	2.33 (1.85)	150 (68.0)
48 (1200)	6′-0″ (1.83 m)	5′-4″ (1.62 m)	4′-6″ (1.37 m)	12 @ 5′-0″ 12 @ (1.52 m)	16 @ 6′-3″ 16 @ (1.9 m)	8 @ 7′-3″ 8 @ (2.21 m)	2 @ 19′-3″ 2 @ (5.87 m)	12 @ 5′-0″ 12 @ (1.52 m)	8 @ 3′-6″ 8 @ (1.07 m)	3.60 (2.80)	230 (104.3)

DESIGN DATA

GENERAL NOTES

All slope ratios are expressed as units of vertical displacement to units of horizontal displacement (V:H).

All dimensions are in inches (millimeters) unless otherwise shown.

Illinois Department of Transportation

APPROVED January 1, 2009
Ralph E. Anderson
ENGINEER OF BRIDGES AND STRUCTURES

APPROVED January 1, 2009
Eric E. Harm
ENGINEER OF DESIGN AND ENVIRONMENT

ISSUED 1-1-97

DATE	REVISIONS
1-1-09	Switched units to English (metric).
1-1-07	Soft converted metric reinforcement bars.

REINFORCED CONCRETE END SECTIONS WITH PARALLEL WINGWALLS FOR PIPE CULVERTS 12″ (300 mm) THRU 48″ (1200 mm) DIA. AT RIGHT ANGLES WITH ROADWAY

STANDARD 542001–02

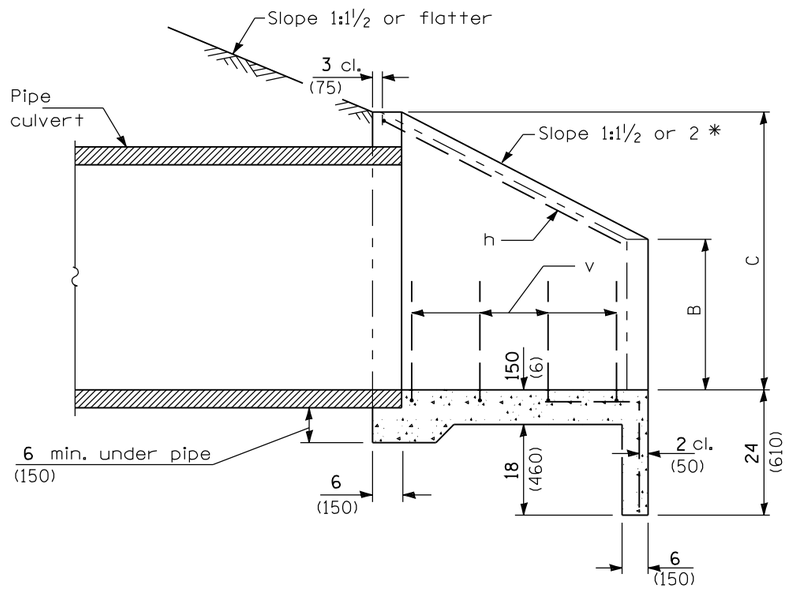

SECTION A-A

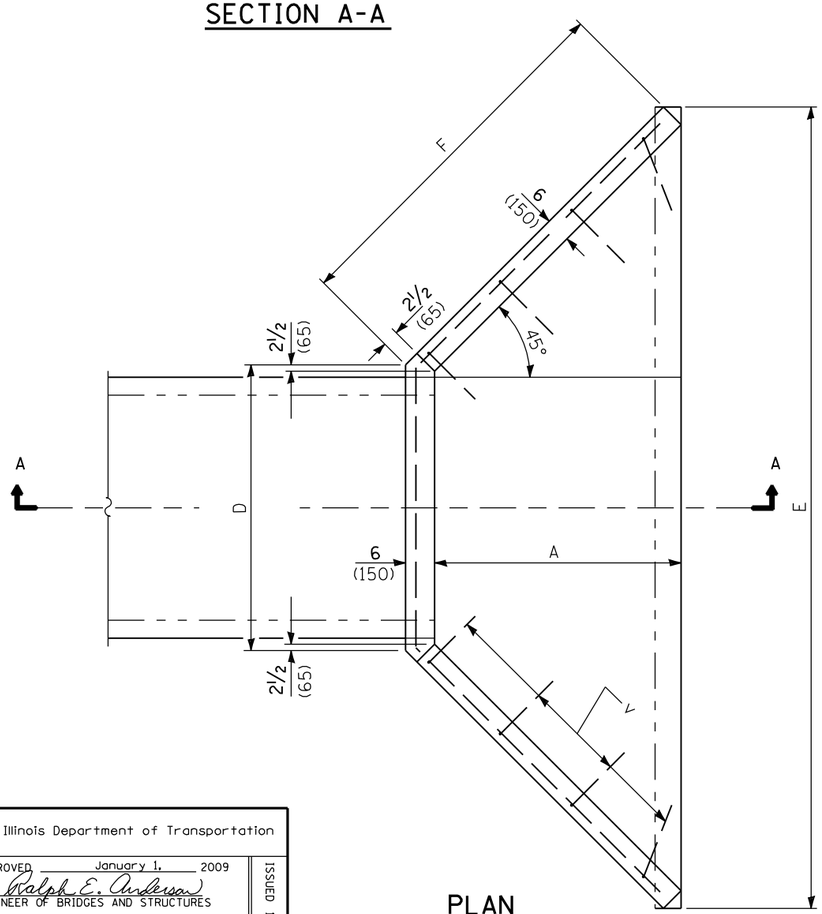

PLAN

DIMENSIONS OF BARS-h to h_9

Bar	a	b
h	22 (560)	29½ (750)
h_1	22 (560)	38½ (980)
h_2	25 (640)	29½ (750)
h_3	25 (640)	38½ (980)
h_4	33 (840)	39 (990)
h_5	33 (840)	4′-1½″ (1.26 m)
h_6	39 (990)	3′-10½″ (1.18 m)
h_7	39 (990)	4′-10½″ (1.50 m)
h_8	3′-11″ (1.19 m)	4′-8″ (1.42 m)
h_9	3′-11″ (1.19 MO)	5′-9½″ (1.77 m)

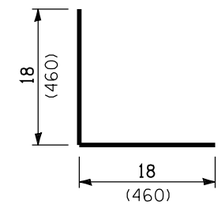

BAR v

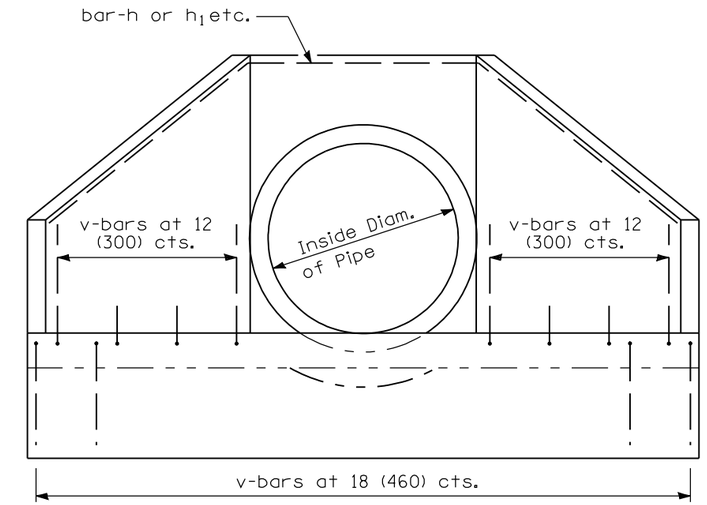

END VIEW

DIMENSIONS AND QUANTITIES

Design No.	Nominal Inside Dia. of Pipe	Slope of Wing Walls	Dimensions A	B	C	D	E	F	Concrete 2 End Secs. cu. yds. (m^3)	Reinforcement Bars - No. 4 (No. 13) h-Bars Bar	Length	v-Bars No.	Total Wt. 2 End Secs. lbs. (kg)
D15-1½ (D375-1½)	15 (375)	1:1½	19 (485)	10 (260)	23 (590)	24 (610)	5′-5½″ (1.67 m)	29½ (750)	0.9 (0.7)	h	6′-9″ (2.06 m)	16	40 (18.1)
D15-2 (D375-2)	15 (375)	1:2	26 (660)	10 (260)	23 (590)	24 (610)	6′-7½″ (2.02 m)	3′-3¼″ (1 m)	1.2 (0.9)	h_1	8′-3″ (2.52 m)	22	60 (27.2)
D18-1½ (D450-1½)	18 (450)	1:1½	19 (485)	13 (330)	26 (660)	27 (690)	5′-8½″ (1.75 m)	29½ (750)	1.3 (1.0)	h_2	7′-0″ (2.14 m)	16	40 (18.1)
D18-2 (D450-2)	18 (450)	1:2	26 (660)	13 (330)	26 (660)	27 (690)	6′-10½″ (2.11 m)	3′-3¼″ (1 m)	1.3 (1.0)	h_3	8′-6″ (2.6 m)	22	60 (27.2)
D24-1½ (D600-1½)	24 (600)	1:1½	25 (640)	16 (410)	33 (840)	35 (890)	7′-4½″ (2.26 m)	38 (970)	1.5 (1.1)	h_4	9′-3″ (2.82 m)	22	60 (27.2)
D24-2 (D600-2)	24 (600)	1:2	34 (865)	16 (410)	33 (840)	35 (890)	8′-10½″ (2.72 m)	4′-2½″ (1.29 m)	2.0 (1.5)	h_5	11′-0″ (3.24 m)	28	70 (31.8)
D30-1½ (D750-1½)	30 (750)	1:1½	30 (770)	19 (480)	39 (990)	3′-5″ (1.05 m)	8′-8½″ (2.68 m)	3′-9″ (1.15 m)	2.0 (1.5)	h_6	11′-0″ (3.39 m)	28	70 (31.8)
D30-2 (D750-2)	30 (750)	1:2	3′-4″ (1.01 m)	19 (480)	39 (990)	3′5″ (1.05 m)	10′-4½″ (3.17 m)	4′-11″ (1.5 m)	2.6 (2.0)	h_7	13′-0″ (3.99 m)	34	80 (36.3)
D36-1½ (D900-1½)	36 (900)	1:1½	36 (915)	22 (560)	3′-10″ (1.17 m)	4′-1″ (1.25 m)	10′4½″ (3.17 m)	4′-5½″ (1.36 m)	2.6 (2.0)	h_8	13′-3″ (4.03 m)	30	80 (36.3)
D36-2 (D900-2)	36 (900)	1:2	4′-0″ (1.22 m)	22 (560)	3′-10″ (1.17 m)	4′-1″ (1.25 m)	12′-4½″ (3.78 m)	5′-10½″ (1.79 m)	3.5 (2.7)	h_9	15′-6″ (4.73 m)	40	100 (45.4)

* If embankment slope above headwall is flatter than 1:2, provide wings for 1:2 slope.

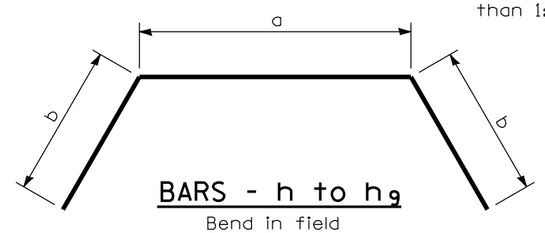

BARS - h to h_9

Bend in field
one required in each headwall

All slope ratios are expressed as units of vertical displacement to units of horizontal displacement (V:H).

All dimensions are in inches (millimeters) unless otherwise shown.

Illinois Department of Transportation

APPROVED January 1, 2009
Ralph E. Anderson
ENGINEER OF BRIDGES AND STRUCTURES

APPROVED January 1, 2009
Eric L. Harm
ENGINEER OF DESIGN AND ENVIRONMENT

ISSUED 1-1-97

DATE	REVISIONS
1-1-09	Switched units to English (metric).
1-1-07	Soft converted metric reinforcement bars.

REINFORCED CONCRETE END SECTIONS FOR PIPE CULVERTS 15″ (375 mm) THRU 36″ (900 mm) DIA. AT RIGHT ANGLES WITH ROADWAY

STANDARD 542101-02

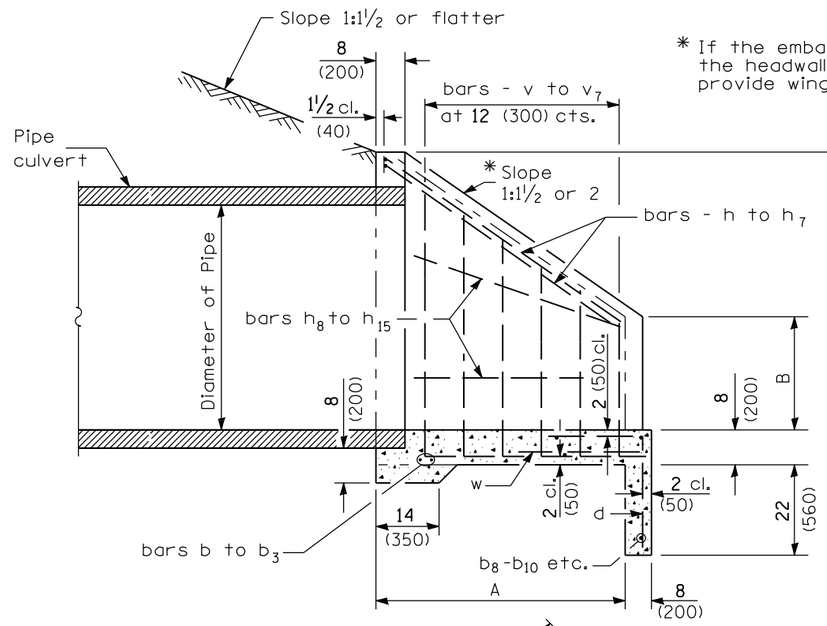

SECTION A-A

* If the embankment slope above the headwall is flatter than 1:2, provide wings for a 1:2 slope.

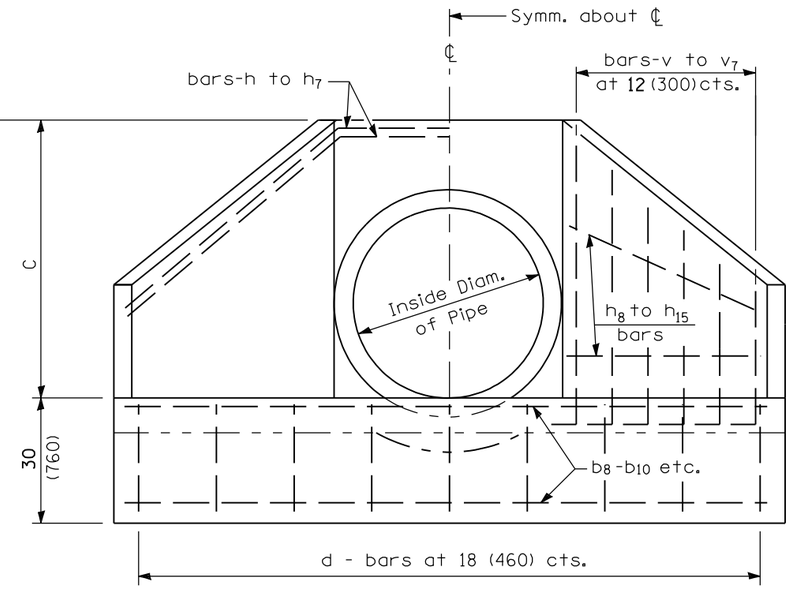

END ELEVATION

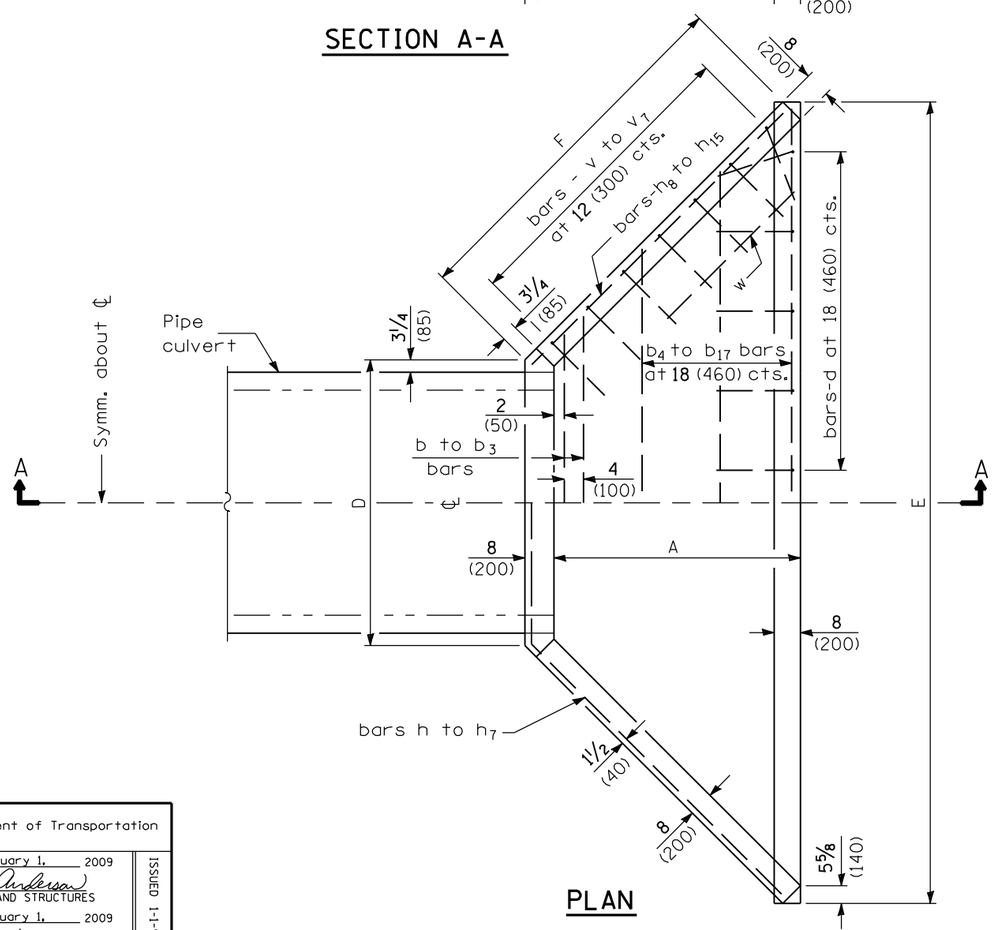

PLAN

GENERAL NOTES

All slope ratios are expressed as units of vertical displacement to units of horizontal displacement (V:H).

All dimensions are in inches (millimeters) unless otherwise shown.

Illinois Department of Transportation

APPROVED January 1, 2009
ENGINEER OF BRIDGES AND STRUCTURES

APPROVED January 1, 2009
ENGINEER OF DESIGN AND ENVIRONMENT

ISSUED 1-1-97

DATE	REVISIONS
1-1-09	Switched units to English (metric).
1-1-07	Soft converted metric reinforcement bars.

REINFORCED CONCRETE END SECTIONS FOR PIPE CULVERT 42" (1050 mm) THRU 60" (1500 mm) DIA. AT RIGHT ANGLES WITH ROADWAY

(Sheet 1 of 2)

STANDARD 542106-02

DIMENSIONS OF STRAIGHT BARS

Bar	Size	Length	Bar	Size	Length
b	No. 5 (No. 16)	6′-3″ (1.9 m)	b_{13}	No. 4 (No. 13)	15′-0″ (4.75 m)
b_1	No. 5 (No. 16)	6′-9″ (2.06 m)	b_{14}	No. 4 (No. 13)	15′-6″ (4.72 m)
b_2	No. 5 (No. 16)	7′-3″ (2.21 m)	b_{15}	No. 4 (No. 13)	16′-6″ (5.03 m)
b_3	No. 5 (No. 16)	8′-0″ (2.44 m)	b_{16}	No. 4 (No. 13)	17′-0″ (5.18 m)
b_4	No. 4 (No. 13)	8′-3″ (2.51 m)	b_{17}	No. 4 (No. 13)	19′-0″ (5.79 m)
b_5	No. 4 (No. 13)	9′-0″ (2.74 m)	h_8	No. 4 (No. 13)	4′-9″ (1.45 m)
b_6	No. 4 (No. 13)	10′-0″ (3.05 m)	h_9	No. 4 (No. 13)	6′-3″ (1.9 m)
b_7	No. 4 (No. 13)	10′-6″ (3.2 m)	h_{10}	No. 4 (No. 13)	5′-3″ (1.6 m)
b_8	No. 4 (No. 13)	11′-3″ (3.43 m)	h_{11}	No. 4 (No. 13)	7′-3″ (2.2 m)
b_9	No. 4 (No. 13)	12′-0″ (3.66 m)	h_{12}	No. 4 (No. 13)	6′-0″ (1.83 m)
b_{10}	No. 4 (No. 13)	13′-0″ (3.96 m)	h_{13}	No. 4 (No. 13)	8′-0″ (2.44 m)
b_{11}	No. 4 (No. 13)	13′-6″ (4.11 m)	h_{14}	No. 4 (No. 13)	6′-6″ (1.98 m)
b_{12}	No. 4 (No. 13)	14′-3″ (4.34 m)	h_{15}	No. 4 (No. 13)	8′-9″ (2.67 m)
			w	No. 4 (No. 13)	4′-0″ (1.22 m)

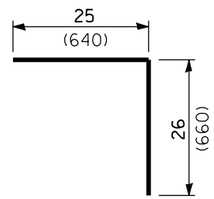

No. 4 (No. 13) **BAR-d**

BARS IN ONE END SECTION

42 Pipe (1050)				48 Pipe (1200)				54 Pipe (1350)				60 Pipe (1500)			
D42-1½ (D1.05-1½)		D42-2 (D1.05-2)		D48-1½ (D1.2-1½)		D48-2 (D1.2-2)		D54-1½ (D1.35-1½)		D54-2 (D1.35-2)		D60-1½ (D1.5-1½)		D60-2 (D1.5-2)	
Bars	No.	Bars	No.	Bars	No.	Bars	No.	Bars	No.	Bars	No.	Bars	No.	Bars	No.
d	8	d	9	d	9	d	10	d	10	d	12	d	11	d	13
b	2	b	2	b_1	2	b_1	2	b_2	2	b_2	2	b_3	2	b_3	2
b_5	1	b_4	1	b_7	1	b_6	1	b_5	1	b_5	1	b_7	1	b_7	1
b_8	2	b_8	1	b_{10}	2	b_{10}	1	b_9	1	b_9	1	b_{11}	1	b_{11}	1
		b_{11}	2			b_{14}	2	b_{12}	2	b_{13}	1	b_{14}	2	b_{15}	1
										b_{16}	2			b_{17}	2
h	2	h_1	2	h_2	2	h_1	2	h_4	2	h_5	2	h_6	2	h_7	2
h_8	4	h_9	4	h_{10}	4	h_9	4	h_{12}	4	h_{13}	4	h_{14}	4	h_{15}	4
v_3	2	v_3	2	v_2	2	v_2	2	v_1	2	v_1	2	v	2	v	4
v_4	2	v_4	2	v_3	2	v_3	4	v_2	2	v_2	4	v_1	2	v_1	2
v_5	2	v_5	4	v_4	2	v_4	2	v_3	2	v_3	2	v_2	2	v_2	2
v_6	2	v_6	2	v_5	2	v_5	2	v_4	2	v_4	2	v_3	2	v_3	4
v_7	2	v_7	2	v_6	2	v_6	4	v_5	2	v_5	4	v_4	2	v_4	2
								v_6	2	v_6	2	v_5	4	v_5	4
w	2	w	2	w	2	w	2	w	2	w	2	w	2	w	2

DIMENSIONS OF BENT BARS

No. 5-bars v to v_7 (No. 16)			No. 5-bars h to h_7 (No. 16)			
BARS	c	TOTAL LENGTH	BARS	a	b	TOTAL LENGTH
v	6′-0″ (1.83 m)	8′-0″ (2.44 m)	h	4′-8″ (1.42 m)	5′-2″ (1.57 m)	15′-0″ (4.56 m)
v_1	5′-6″ (1.68 m)	7′-6″ (2.29 m)	h_1	4′-8″ (1.42 m)	6′-8″ (2.03 m)	18′-0″ (5.48 m)
v_2	5′-0″ (1.52 m)	7′-0″ (2.13 m)	h_2	5′-3″ (1.6 m)	5′-10½″ (1.79 m)	17′-0″ (5.18 m)
v_3	4′-6″ (1.37 m)	6′-6″ (1.98 m)	h_3	5′-3″ (1.6 m)	7′-6″ (2.29 m)	20′-3″ (6.18 m)
v_4	4′-0″ (1.22 m)	6′-0″ (1.83 m)	h_4	5′-10″ (1.78 m)	6′-7″ (2.01 m)	19′-0″ (5.78 m)
v_5	3′-6″ (1.07 m)	5′-6″ (1.68 m)	h_5	5′-10″ (1.78 m)	8′-4″ (2.54 m)	22′-6″ (6.86 m)
v_6	36 (920)	5′-0″ (1.53 m)	h_6	6′-5″ (1.96 m)	7′-2″ (2.18 m)	20′-9″ (6.32 m)
v_7	24 (610)	4′-6″ (1.22 m)	h_7	6′-5″ (1.96 m)	9′-3½″ (2.83 m)	25′-0″ (7.59 m)

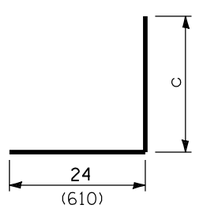

BARS - v to v_7

DIMENSIONS AND QUANTITIES

Design No.	Nominal Inside Dia. of Pipe	Slope of Wing Walls	Dimensions A	B	C	D	E	F	Concrete 2 End Secs. cu. yds. (m^3)	Reinf. Bars 2 End Secs. lbs. (kg)
D42-1½ (D1.05-1½)	42 (1050)	1:1½	3′-4″ (1.01 m)	26 (660)	4′-4½″ (1.33 m)	4′-10″ (1.48 m)	11′-10½″ (3.63 m)	5′-0″ (1.52 m)	4.8 (3.7)	330 (150)
D42-2 (D1.05-2)	42 (1050)	1:2	4′-5″ (1.35 m)	26 (660)	1.33 m (1.33 m)	4′-10″ (1.48 m)	14′-0½″ (4.29 m)	6′-6¼″ (1.99 m)	6.2 (4.7)	400 (180)
D48-1½ (D1.2-1½)	48 (1200)	1:1½	3′-9″ (1.14 m)	29 (740)	4′-11″ (1.5 m)	5′-5″ (1.65 m)	13′-3½″ (4.05 m)	5′-7″ (1.7 m)	5.8 (4.4)	360 (163)
D48-2 (D1.2-2)	48 (1200)	1:2	5′-0″ (1.52 m)	29 (740)	4′-11″ (1.5 m)	5′-5″ (1.65 m)	15′-9½″ (4.82 m)	7′-4¼″ (2.24 m)	7.6 (5.8)	460 (210)
D54-1½ (D1.35-1½)	54 (1350)	1:1½	4′-2″ (1.27 m)	32 (815)	5′-5½″ (1.66 m)	6′-0″ (1.83 m)	14′-8½″ (4.49 m)	6′-2″ (1.88 m)	6.8 (5.2)	430 (195)
D54-2 (D1.35-2)	54 (1350)	1:2	5′-7″ (1.7 m)	32 (815)	5′-5½″ (1.66 m)	6′-0″ (1.83 m)	17′-6½″ (5.35 m)	8′-2″ (2.49 m)	9.2 (7.0)	550 (250)
D60-1½ (D1.5-1½)	60 (1500)	1:1½	4′-7″ (1.4 m)	35 (890)	6′-0″ (1.83 m)	6′-7″ (2.0 m)	16′-1½″ (4.91 m)	6′-9″ (2.06 m)	8.0 (6.1)	490 (223)
D60-2 (D1.5-2)	60 (1500)	1:2	6′-2″ (1.88 m)	35 (890)	6′-0″ (1.83 m)	6′-7″ (2.0 m)	19′-3½″ (5.88 m)	9′-0″ (2.74 m)	10.8 (8.3)	630 (285)

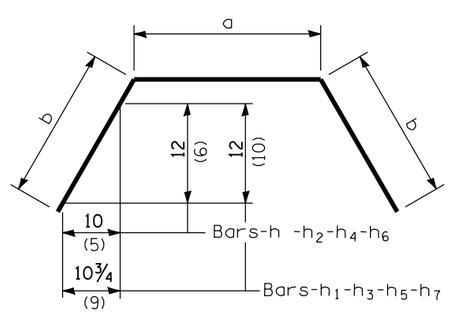

BARS - h to h_7

Illinois Department of Transportation

APPROVED January 1, 2009
Ralph E. Anderson
ENGINEER OF BRIDGES AND STRUCTURES

APPROVED January 1, 2009
Eric E. Harm
ENGINEER OF DESIGN AND ENVIRONMENT

ISSUED 1-1-97

REINFORCED CONCRETE END SECTIONS FOR PIPE CULVERT 42″ (1050 mm) THRU 60″ (1500 mm) DIA. AT RIGHT ANGLES WITH ROADWAY

(Sheet 2 of 2)

STANDARD 542106–02

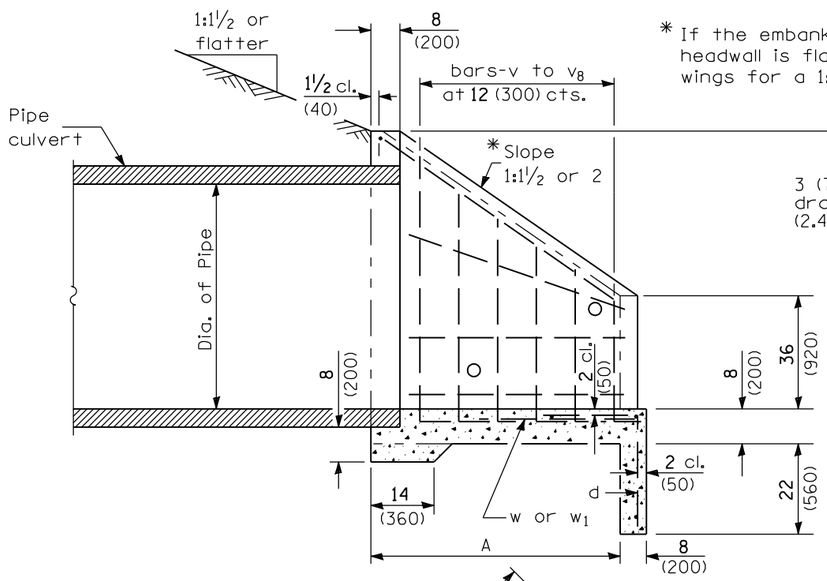

SECTION A-A

* If the embankment slope above the headwall is flatter than 1:2, provide wings for a 1:2 slope.

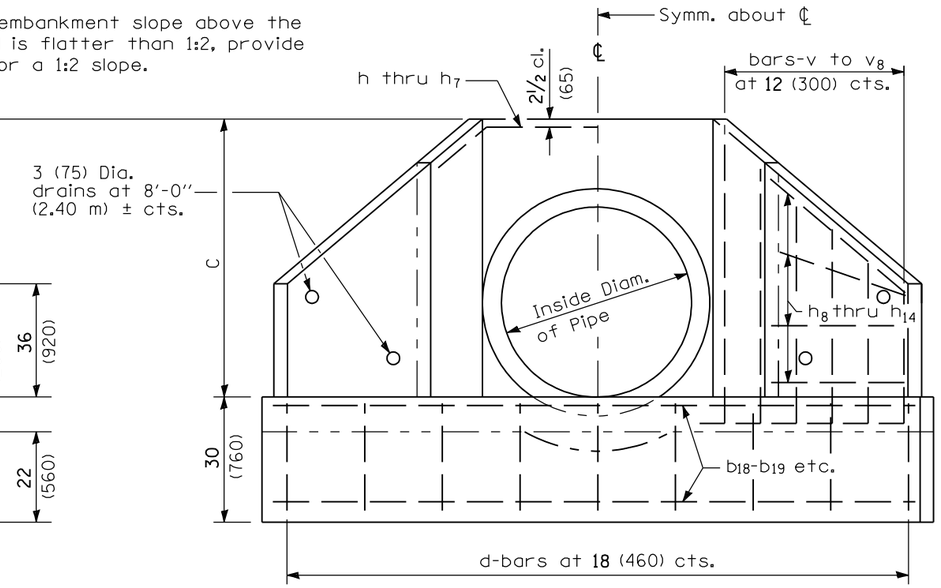

END ELEVATION

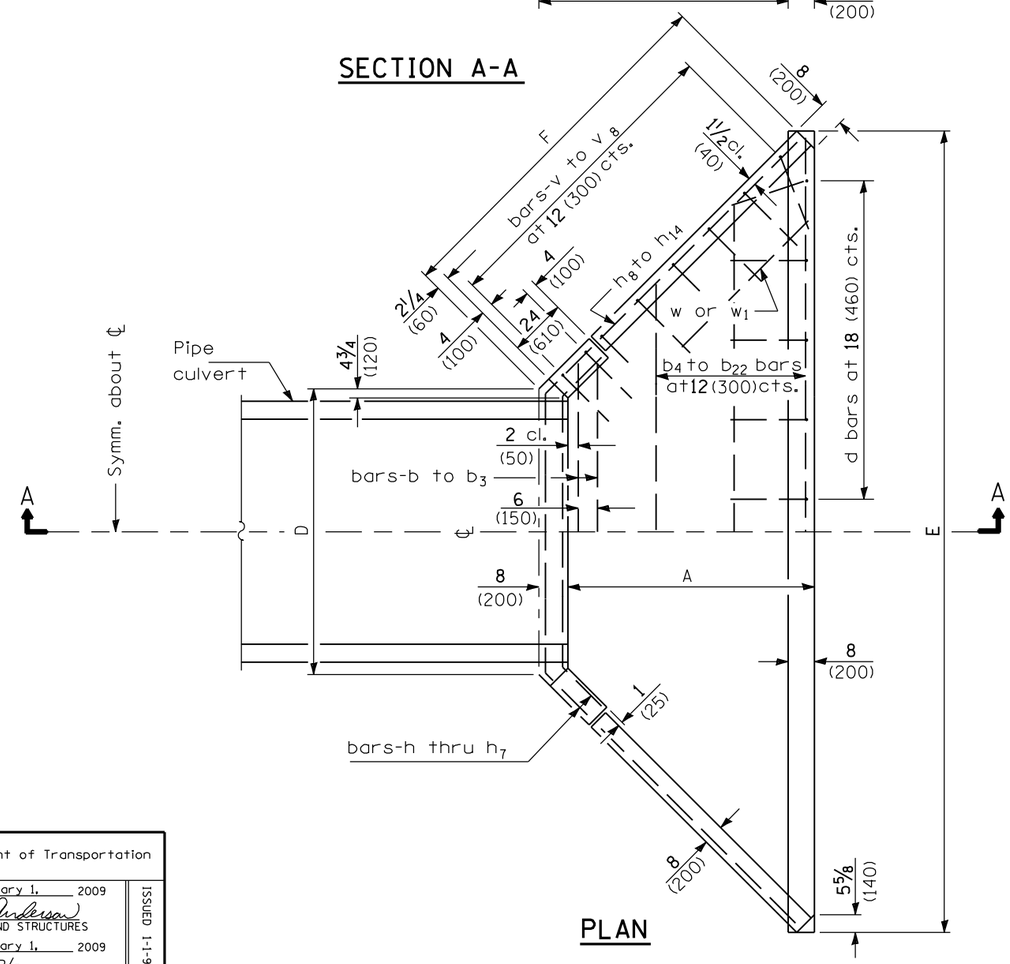

PLAN

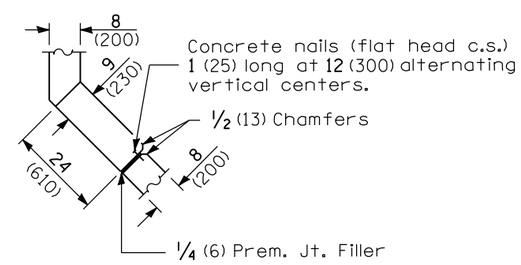

CORNER DETAIL

GENERAL NOTES

All slope ratios are expressed as units of vertical displacement to units of horizontal displacement (V:H).

All dimensions are in inches (millimeters) unless otherwise shown.

Illinois Department of Transportation

APPROVED January 1, 2009
ENGINEER OF BRIDGES AND STRUCTURES

APPROVED January 1, 2009
ENGINEER OF DESIGN AND ENVIRONMENT

ISSUED 1-1-97

DATE	REVISIONS
1-1-09	Switched units to
	English (metric).
1-1-07	Soft converted metric
	reinforcement bars.

REINFORCED CONCRETE END SECTIONS FOR PIPE CULVERTS 66" (1650 mm) THRU 84" (2100 mm) DIA. AT RIGHT ANGLES WITH ROADWAY

(Sheet 1 of 2)

STANDARD 542111-02

DIMENSIONS OF STRAIGHT BARS

Bar	Size	Length	Bar	Size	Length
b	No. 5 (No. 16)	8′-3″ (2.51 m)	b_{16}	No. 4 (No. 13)	20′-3″ (6.17 m)
b_1	No. 5 (No. 16)	9′-0″ (2.74 m)	b_{17}	No. 4 (No. 13)	21′-0″ (6.4 m)
b_2	No. 5 (No. 16)	9′-6″ (2.9 m)	b_{18}	No. 4 (No. 13)	22′-6″ (6.86 m)
b_3	No. 5 (No. 16)	10′-3″ (3.12 m)	b_{19}	No. 4 (No. 13)	24′-0″ (7.32 m)
b_4	No. 4 (No. 13)	11′-3″ (3.43 m)	b_{20}	No. 4 (No. 13)	24′-9″ (7.54 m)
b_5	No. 4 (No. 13)	12′-0″ (3.66 m)	b_{21}	No. 4 (No. 13)	27′-0″ (8.23 m)
b_6	No. 4 (No. 13)	13′-0″ (3.96 m)	b_{22}	No. 4 (No. 13)	29′-6″ (8.99 m)
b_7	No. 4 (No. 13)	13′-6″ (4.11 m)	h_8	No. 4 (No. 13)	5′-3″ (1.6 m)
b_8	No. 4 (No. 13)	14′-0″ (4.27 m)	h_9	No. 4 (No. 13)	6′-6″ (1.98 m)
b_9	No. 4 (No. 13)	14′-9″ (4.5 m)	h_{10}	No. 4 (No. 13)	7′-6″ (2.29 m)
b_{10}	No. 4 (No. 13)	15′-6″ (4.72 m)	h_{11}	No. 4 (No. 13)	8′-9″ (2.67 m)
b_{11}	No. 4 (No. 13)	16′-3″ (4.95 m)	h_{12}	No. 4 (No. 13)	9′-3″ (2.82 m)
b_{12}	No. 4 (No. 13)	16′-9″ (5.11 m)	h_{13}	No. 4 (No. 13)	10′-9″ (3.28 m)
b_{13}	No. 4 (No. 13)	17′-6″ (5.33 m)	h_{14}	No. 4 (No. 13)	12′-3″ (3.73 m)
b_{14}	No. 4 (No. 13)	18′-6″ (5.64 m)	w	No. 4 (No. 13)	6′-0″ (1.83m)
b_{15}	No. 4 (No. 13)	19′-6″ (5.94 m)	w_1	No. 4 (No. 13)	10′-0″ (3.05 m)

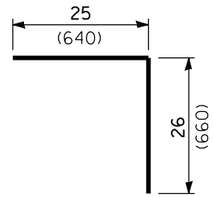

No. 4 (No. 13) BAR-d

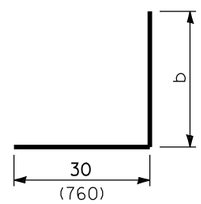

BARS - v to v_8

BARS IN ONE END SECTION

66 Pipe (1650)				72 Pipe (1800)				78 Pipe (1950)				84 Pipe (2100)			
66-1½ (1.65-1½)		66-2 (1.65-2)		72-1½ (1.8-1½)		72-2 (1.8-2)		78-1½ (1.95-1½)		78-2 (1.95-2)		84-1½ (2.1-1½)		84-2 (2.1-2)	
BARS	No.	BARS	No.	BARS	No.	BARS	No.	BARS	No.	BARS	No.	BARS	No.	BARS	No.
d	12	d	14	d	14	d	17	d	16	d	19	d	17	d	20
b	2	b	2	b_1	2	b_1	2	b_2	2	b_2	2	b_3	2	b_3	2
b_4	1	b_4	1	b_5	1	b_5	1	b_5	1	b_5	1	b_6	1	b_6	1
b_7	1	b_7	1	b_8	1	b_8	1	b_8	1	b_9	1	b_9	1	b_9	1
b_{10}	1	b_{10}	1	b_{11}	1	b_{11}	1	b_{11}	1	b_{11}	1	b_{12}	1	b_{12}	1
b_{13}	2	b_{13}	1	b_{14}	1	b_{14}	1	b_{14}	1	b_{14}	1	b_{14}	1	b_{14}	1
		b_{15}	1	b_{16}	2	b_{16}	1	b_{16}	1	b_{17}	1	b_{17}	1	b_{17}	1
		b_{17}	2			b_{18}	1	b_{18}	2	b_{18}	1	b_{18}	1	b_{18}	1
						b_{19}	2			b_{20}	1	b_{19}	2	b_{20}	1
										b_{21}	2			b_{21}	1
														b_{22}	2
h	2	h_1	2	h_2	2	h_3	2	h_4	2	h_5	2	h_6	2	h_7	2
h_8	8	h_{10}	8	h_9	10	h_{12}	10	h_{10}	12	h_{13}	12	h_{11}	12	h_{14}	12
								v	4	v	4	v	4	v	4
v	4	v	4	v	4	v	4	v_1	4	v_1	8	v_1	4	v_1	6
v_1	4	v_1	6	v_1	4	v_1	8	v_2	4	v_2	6	v_2	4	v_2	4
v_2	4	v_2	4	v_2	4	v_3	6	v_4	4	v_4	6	v_4	4	v_4	6
v_4	8	v_4	10	v_4	10	v_5	10	v_5	8	v_6	8	v_6	4	v_6	6
												v_7	8	v_8	8
h_8	4	h_9	4	h_8	4	h_{10}	4	h_9	4	h_{11}	4	h_{10}	4	h_{12}	4
w	2	w	2	w	2	w_1	2	w	2	w_1	2	w_1	2	w_1	2

DIMENSIONS OF BENT BARS

No. 5 -bars v to v_8 (No. 16)			No. 5 -bars h to h_7 (No. 16)			
BAR	b	TOTAL LENGTH	BAR	a	b	TOTAL LENGTH
v	39 (990)	5′-9″ (1.75 m)	h	7′-0″ (2.13 m)	24 (610)	11′-0″ (3.35 m)
v_1	4′-0″ (1.22 m)	6′-6″ (1.98 m)	h_1	7′-0″ (2.13 m)	24 (610)	11′-0″ (3.35 m)
v_2	5′-0″ (1.52 m)	7′-6″ (2.28 m)	h_2	7′-7″ (2.31 m)	23½ (600)	11′-6″ (3.51 m)
v_3	5′-6″ (1.68 m)	8′-0″ (2.44 m)	h_3	7′-7″ (2.31 m)	23½ (600)	11′-6″ (3.51 m)
v_4	6′-0″ (1.83 m)	8′-6″ (2.59 m)	h_4	8′-2″ (2.49 m)	23 (580)	12′-0″ (3.65 m)
v_5	6′-6″ (1.98 m)	9′-0″ (2.74 m)	h_5	8′-2″ (2.49 m)	23 (580)	12′-0″ (3.65 m)
v_6	7′-0″ (2.13 m)	9′-6″ (2.89 m)	h_6	8′-9″ (2.67 m)	24 (610)	12′-9″ (3.89 m)
v_7	7′-6″ (2.29 m)	10′-0″ (3.05 m)	h_7	8′-9″ (2.67 m)	24 (610)	12′-9″ (3.89 m)
v_8	8′-0″ (2.44 m)	10′-6″ (3.2 m)				

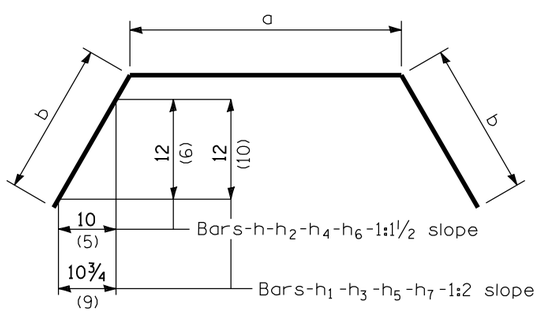

BARS - h to h_7

DIMENSIONS AND QUANTITIES

Design No.	Nominal Inside Dia. of Pipe	Slope of Wing Walls	Dimensions A	C	D	E	F	Concrete 2 End Secs. cu. yds. (m^3)	Reinf. Bars 2 End Secs. lbs. (kg)
D66-1½ (D1.65-½)	66 (1650)	1:1½	5′-4″ (1.65 m)	6′-6½″ (2.0 m)	7′-4½″ (2.25 m)	18′-5″ (5.63 m)	7′-10″ (2.39 m)	10.2 (7.8)	660 (300)
D66-2 (D1.65-2)	66 (1650)	1:2	7′-1″ (2.18 m)	6′-6½″ (2.0 m)	7′-4½″ (2.25 m)	21′-11″ (6.69 m)	10′-3½″ (3.14 m)	13.5 (10.3)	820 (372)
D72-1½ (D1.8-1½)	72 (1800)	1:1½	6′-2″ (1.9 m)	7′-1″ (2.16 m)	7′-11½″ (2.43 m)	20′-8″ (6.3 m)	9′-0″ (2.74 m)	12.4 (9.5)	770 (350)
D72-2 (D1.8-2)	72 (1800)	1:2	8′-2″ (2.51 m)	7′-1″ (2.16 m)	7′-11½″ (2.43 m)	24′-8″ (7.54 m)	11′-10″ (3.61 m)	16.5 (12.6)	1020 (463)
D78-1½ (D1.95-1½)	78 (1950)	1:1½	6′-11″ (2.12 m)	7′-7½″ (2.32 m)	8′-6½″ (2.6 m)	22′-9″ (6.93 m)	10′-0½″ (3.06 m)	14.5 (11.1)	910 (413)
D78-2 (D1.95-2)	78 (1950)	1:2	9′-3″ (2.82 m)	7′-7½″ (2.32 m)	8′-6½″ (2.6 m)	27′-5″ (8.37 m)	13′-4½″ (4.08 m)	19.6 (15.0)	1210 (550)
D84-1½ (D2.1-1½)	84 (2100)	1:1½	7′-9″ (2.38 m)	8′-2″ (2.49 m)	9′-1½″ (2.78 m)	25′-0″ (7.63 m)	11′-3″ (3.43 m)	17.1 (13.1)	1090 (495)
D84-2 (D2.1-2)	84 (2100)	1:2	10′-4″ (3.17 m)	8′-2″ (2.49 m)	9′-1½″ (2.78 m)	30′-2″ (9.2 m)	14′-10¾″ (4.54 m)	23.2 (17.7)	1360 (617)

Illinois Department of Transportation

APPROVED January 1, 2009
Ralph E. Anderson
ENGINEER OF BRIDGES AND STRUCTURES

APPROVED January 1, 2009
Eric E. Harm
ENGINEER OF DESIGN AND ENVIRONMENT

ISSUED 1-1-97

REINFORCED CONCRETE END SECTIONS
FOR PIPE CULVERTS
66″ (1650 mm) THRU 84″ (2100 mm) DIA.
AT RIGHT ANGLES WITH ROADWAY
(Sheet 2 of 2)

STANDARD 542111-02

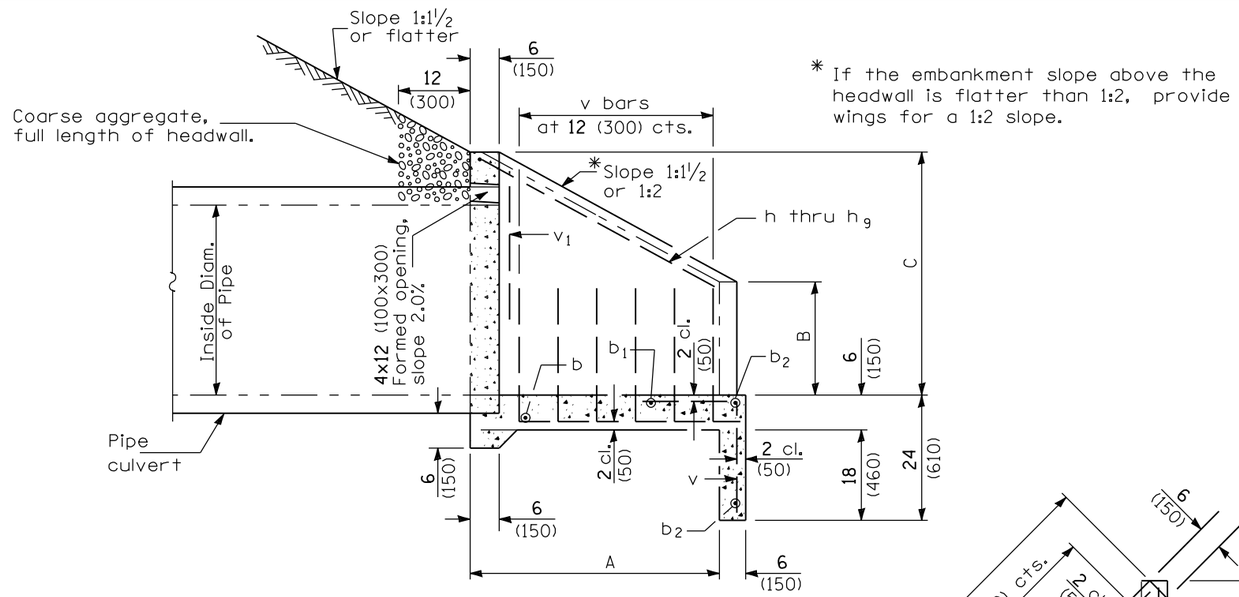

* If the embankment slope above the headwall is flatter than 1:2, provide wings for a 1:2 slope.

SECTION A-A

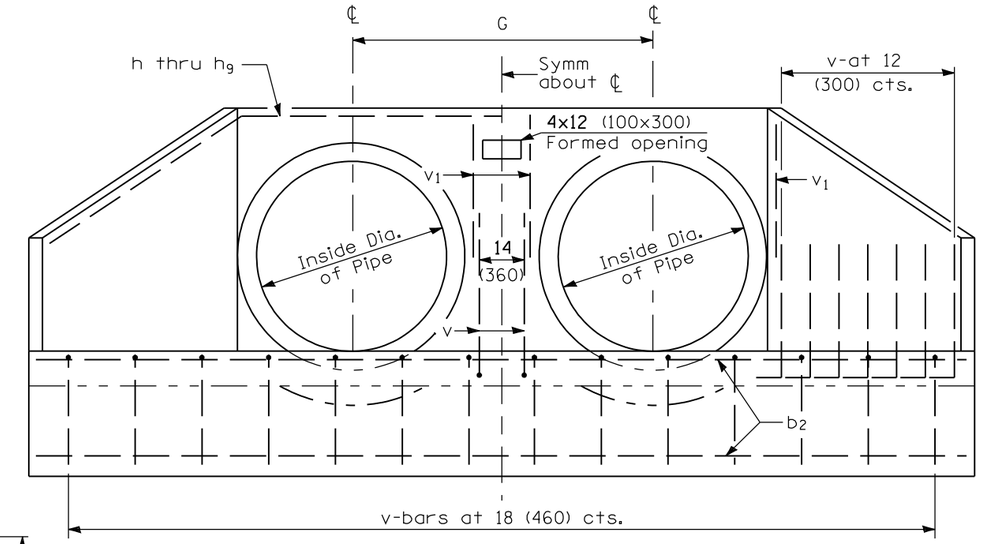

END ELEVATION

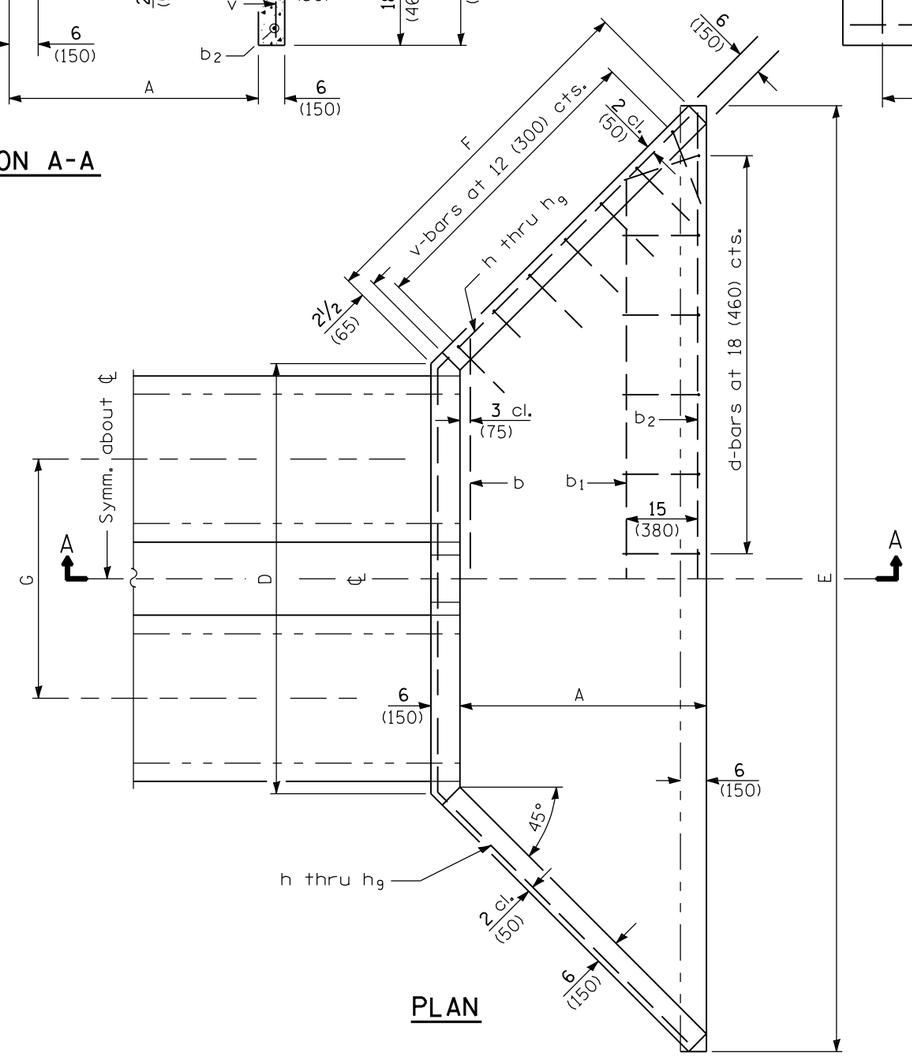

PLAN

GENERAL NOTES

All slope ratios are expressed as units of vertical displacement to units of horizontal displacement (V:H).

All dimensions are in inches (millimeters) unless otherwise shown.

Illinois Department of Transportation

APPROVED January 1, 2009
Ralph E. Anderson
ENGINEER OF BRIDGES AND STRUCTURES

APPROVED January 1, 2009
Eric L. Harm
ENGINEER OF DESIGN AND ENVIRONMENT

ISSUED 1-1-97

DATE	REVISIONS
1-1-09	Switched units to English (metric).
1-1-07	Soft converted metric reinforcement bars.

REINFORCED CONCRETE END SECTIONS FOR MULTIPLE (2 & 3) PIPE CULVERTS 15" (375 mm) THRU 36" (900 mm) DIA. AT RIGHT ANGLES WITH ROADWAY

(Sheet 1 of 3)

STANDARD 542116-02

DIMENSIONS OF BARS-h to h_9

Bars	For 2 Pipes		For 3 Pipes	
	a	b	a	b
h	4′-11″ (1.5 m)	29 (740)	8′-0″ (2.44 m)	30 (760)
h_1	4′-11″ (1.5 m)	3′-3½″ (1.0 m)	8′-0″ (2.44 m)	39 (990)
h_2	5′-5″ (1.65 m)	29 (740)	8′-9″ (2.67 m)	30 (760)
h_3	5′-5″ (1.65 m)	3′-3½″ (1.0 m)	8′-9″ (2.67 m)	39 (990)
h_4	6′-9″ (2.06 m)	39 (990)	10′-9″ (3.28 m)	39 (990)
h_5	6′-9″ (2.06 m)	4′-3″ (1.3 m)	10′-9″ (3.28 m)	4′-3″ (1.3 m)
h_6	7′-9″ (2.36 m)	3′-10½″ (1.18 m)	12′-3″ (3.74 m)	3′-10½″ (1.18 m)
h_7	7′-9″ (2.36 m)	4′-10½″ (1.49 m)	12′-3″ (3.74 m)	4′-10½″ (1.49 m)
h_8	9′-0″ (2.75 m)	4′-9″ (1.45 m)	14′-0″ (4.27 m)	4′-9″ (1.45 m)
h_9	9′-0″ (2.75 m)	5′-9″ (1.75 m)	14′-0″ (4.27 m)	5′-9″ (1.75 m)

TABLE OF DIMENSIONS

Design No.	Nominal Inside Dia. of Pipe	Slope of Wing Walls	Dimensions								
			For all Multiples of Pipes					For 2 Pipes		For 3 Pipes	
			A	B	C	F	G	D	E	D	E
D15-1½ (D375-1½)	15 (375)	1:1½	19 (495)	10 (260)	23 (590)	29½ (750)	37 (940)	5′-1″ (1.55 m)	8′-6½″ (2.61 m)	8′-2″ (2.49 m)	11′-7½″ (3.55 m)
D15-2 (D375-2)	15 (375)	1:2	26 (660)	10 (260)	23 (590)	3′-3¼″ (1.0 m)	37 (940)	5′-1″ (1.55 m)	9′-8½″ (2.96 m)	8′-2″ (2.49 m)	12′-9½″ (3.9 m)
D18-1½ (D450-1½)	18 (450)	1:1½	19 (495)	13 (330)	26 (660)	29½ (750)	3′-4″ (1.02 m)	5′-7″ (1.71 m)	9′-0½″ (2.77 m)	8′-11″ (2.73 m)	12′-4½″ (3.79 m)
D18-2 (D450-2)	18 (450)	1:2	26 (660)	13 (330)	26 (660)	3′-3¼″ (1.0 m)	3′-4″ (1.02 m)	5′-7″ (1.71 m)	10′-2½″ (3.12 m)	8′-11″ (2.73 m)	13′-6½″ (4.14 m)
D24-1½ (D600-1½)	24 (600)	1:1½	25 (640)	16 (410)	33 (840)	38 (965)	4′-0″ (1.22 m)	6′-11″ (2.11 m)	11′-4½″ (3.47 m)	10′-11″ (3.33 m)	15′-4½″ (4.69 m)
D24-2 (D600-2)	24 (600)	1:2	34 (860)	16 (410)	33 (840)	4′-2½″ (1.28 m)	4′-0″ (1.22 m)	6′-11″ (2.11 m)	12′-10½″ (3.92 m)	10′-11″ (3.33 m)	16′-10½″ (5.14 m)
D30-1½ (D750-1½)	30 (750)	1:1½	30 (760)	19 (485)	39 (990)	3′-9″ (1.14 m)	4′-6″ (1.37 m)	7′-11″ (2.41 m)	13′-2½″ (4.02 m)	12′-5″ (3.78 m)	17′-8½″ (5.39 m)
D30-2 (D750-2)	30 (750)	1:2	3′-4″ (1.01 m)	19 (485)	39 (990)	4′-11″ (1.5 m)	4′-6″ (1.37 m)	7′-11″ (2.41 m)	14′-10½″ (4.53 m)	12′-5″ (3.78 m)	19′-4½″ (5.9 m)
D36-1½ (D900-1½)	36 (900)	1:1½	36 (915)	22 (560)	3′-10″ (1.17 m)	4′-5½″ (1.36 m)	5′-2″ (1.57 m)	9′-0″ (2.75 m)	15′-6½″ (4.67 m)	14′-5″ (4.32 m)	20′-8½″ (6.24 m)
D36-2 (D900-2)	36 (900)	1:2	4′-0″ (1.22 m)	22 (560)	3′-10″ (1.17 m)	5′-10½″ (1.79 m)	5′-2″ (1.57 m)	9′-0″ (2.75 m)	17′-6½″ (5.28 m)	14′-5″ (4.32 m)	22′-8½″ (6.85 m)

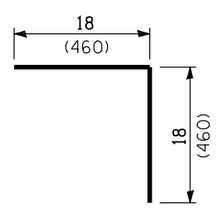

BAR v

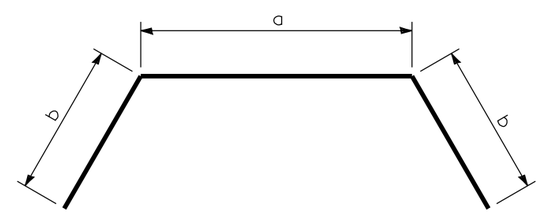

BARS - h to h_9

Bend in field
One required in each headwall

Illinois Department of Transportation

APPROVED January 1, 2009
Ralph E. Anderson
ENGINEER OF BRIDGES AND STRUCTURES

APPROVED January 1, 2009
Eric L. Harm
ENGINEER OF DESIGN AND ENVIRONMENT

ISSUED 1-1-97

REINFORCED CONCRETE END SECTIONS
FOR MULTIPLE (2 & 3) PIPE CULVERTS
15″ (375 mm) THRU 36″ (900 mm) DIA.
AT RIGHT ANGLES WITH ROADWAY
(Sheet 2 of 3)

STANDARD 542116–02

TABLE OF QUANTITIES

Design No.	For 2 Pipes												
	Concrete 2 End Secs. cu. yds. (m^3)	Reinforcement Bars in One End Section											Total Quanity 2 End Secs. lbs. (kg)
		No. 4 -h Bars (No. 13)		No. 4 -b_2 Bars (No. 13)		No. 4 -b_1 Bars (No. 13)		No. 4 -b Bars (No. 13)		No. 4 -v_1 Bars (No. 13)		No. 4-v Bars (No. 13)	
		Bar	Length	Qty.	Length	Qty.	Length	Qty.	Length	Qty.	Length	Qty.	
D15-1½ (D375-1½)	1.4 (1.1)	h	9′-9″ (2.98 m)	2	8′-3″ (2.5 m)			1	6′-3″ (1.9 m)			14	100 (45.4)
D15-2 (D375-2)	1.8 (1.4)	h_1	11′-6″ (3.5 m)	2	9′-3″ (2.82 m)	1	7′-3″ (2.21 m)	1	6′-3″ (1.9 m)			17	130 (59.0)
D18-1½ (D450-1½)	1.7 (1.3)	h_2	10′-3″ (3.13 m)	2	8′-6″ (2.59 m)			1	6′-9″ (2.06 m)			14	100 (45.4)
D18-2 (D450-2)	2.0 (1.5)	h_3	12′-0″ (3.65 m)	2	9′-9″ (2.97 m)	1	7′-9″ (2.36 m)	1	6′-9″ (2.06 m)			17	130 (59.0)
D24-1½ (D600-1½)	2.4 (1.8)	h_4	13′-3″ (4.04 m)	2	11′-0″ (3.35 m)	1	9′-0″ (2.74 m)	1	8′-0″ (2.44 m)	4	31 (790)	18	160 (72.6)
D24-2 (D600-2)	3.0 (2.3)	h_5	15′-3″ (4.66 m)	2	12′-6″ (3.81 m)	1	10′-6″ (3.2 m)	1	8′-0″ (2.44 m)	4	31 (790)	21	180 (81.6)
D30-1½ (D750-1½)	3.0 (2.3)	h_6	15′-6″ (4.72 m)	2	12′-9″ (3.89 m)	1	10′-3″ (3.12 m)	1	8′-3″ (2.51 m)	4	31 (790)	19	170 (77.1)
D30-2 (D750-2)	3.8 (2.9)	h_7	17′-6 ″ (5.34 m)	2	14′-6″ (4.42 m)	1	12′-3″ (3.73 m)	1	8′-3″ (2.51 m)	4	31 (790)	22	190 (86.2)
D36-1½ (D900-1½)	3.9 (3.0)	h_8	18′-6″ (5.65 m)	2	15′-0″ (4.57 m)	1	12′-6″ (3.81 m)	1	9′-9″ (2.97 m)	4	3′-6″ (1.07 m)	22	200 (90.7)
D36-2 (D900-2)	5.0 (3.8)	h_9	20′-6″ (6.25 m)	2	17′-0″ (5.18 m)	1	14′-6″ (4.42 m)	1	9′-9″ (2.97 m)	4	3′-6″ (1.07 m)	26	230 (104)

Design No.	For 3 Pipes												
	Concrete 2 End Secs. cu. yds. (m^3)	Reinforcement Bars in One End Section											Total Quanity 2 End Secs. lbs. (kg)
		No. 4 -h Bars (No. 13)		No. 4 -b_2 Bars (No. 13)		No. 4 -b_1 Bars (No. 13)		No. 4 -b Bars (No. 13)		No. 4 -v_1 Bars (No. 13)		No. 4-v Bars (No. 13)	
		Bar	Length	Qty.	Length	Qty.	Length	Qty.	Length	Qty.	Length	Qty.	
D15-1½ (D375-1½)	2.0 (1.5)	h	13′-0″ (3.96 m)	2	11′-3″ (3.43 m)			1	9′-3″ (2.82 m)			18	130 (59.0)
D15-2 (D375-2)	2.5 (1.9)	h_1	14′-6″ (4.42 m)	2	12′-3″ (3.74 m)	1	11′-0″ (3.35 m)	1	9′-3″ (2.82 m)			21	170 (77.1)
D18-1½ (D450-1½)	2.3 (1.8)	h_2	13′-9″ (4.19 m)	2	12′-0″ (3.66 m)			1	10′-0″ (3.05 m)			19	140 (63.5)
D18-2 (D450-2)	2.7 (2.0)	h_3	15′-3″ (4.65 m)	2	13′-0″ (3.96 m)	1	11′-9″ (3.58 m)	1	10′-0″ (3.05 m)			21	190 (86.2)
D24-1½ (D600-1½)	3.2 (2.4)	h_4	17′-3″ (5.26 m)	2	15′-0″ (4.57 m)	1	13′-6″ (4.11 m)	1	12′-0″ (3.65 m)	6	31 (790)	22	210 (95.3)
D24-2 (D600-2)	3.9 (3.0)	h_5	19′-3″ (5.88 m)	2	16′-6″ (5.03 m)	1	15′-6″ (4.72 m)	1	12′-0″ (3.65 m)	6	31 (790)	25	230 (104)
D30-1½ (D750-1½)	4.1 (3.1)	h_6	20′-0″ (6.1 m)	2	17′-3″ (5.26 m)	1	14′-9″ (4.5 m)	1	13′-0″ (3.96 m)	6	31 (790)	24	230 (104)
D30-2 (D750-2)	5.0 (3.8)	h_7	22′-0″ (6.72 m)	2	19′-0″ (5.79 m)	1	16′-9″ (5.11 m)	1	13′-0″ (3.96 m)	6	31 (790)	27	250 (113)
D36-1½ (D900-1½)	5.3 (4.1)	h_8	23′-6″ (7.17 m)	2	20′-0″ (6.1 m)	1	17′-6″ (5.33 m)	1	14′-9″ (4.5 m)	6	3′-6″ (1.07 m)	28	270 (122)
D36-2 (D900-2)	6.5 (5.0)	h_9	25′-6″ (7.77 m)	2	22′-0″ (6.71 m)	1	19′-6″ (5.94 m)	1	14′-9″ (4.5 m)	6	3′-6″ (1.07 m)	31	290 (132)

Illinois Department of Transportation

APPROVED January 1, 2009
Ralph E. Anderson
ENGINEER OF BRIDGES AND STRUCTURES

APPROVED January 1, 2009
Eric E. Harm
ENGINEER OF DESIGN AND ENVIRONMENT

ISSUED 1-1-97

REINFORCED CONCRETE END SECTIONS
FOR MULTIPLE (2 & 3) PIPE CULVERTS
15″ (375 mm) THRU 36″ (900 mm) DIA.
AT RIGHT ANGLES WITH ROADWAY
(Sheet 3 of 3)

STANDARD 542116–02

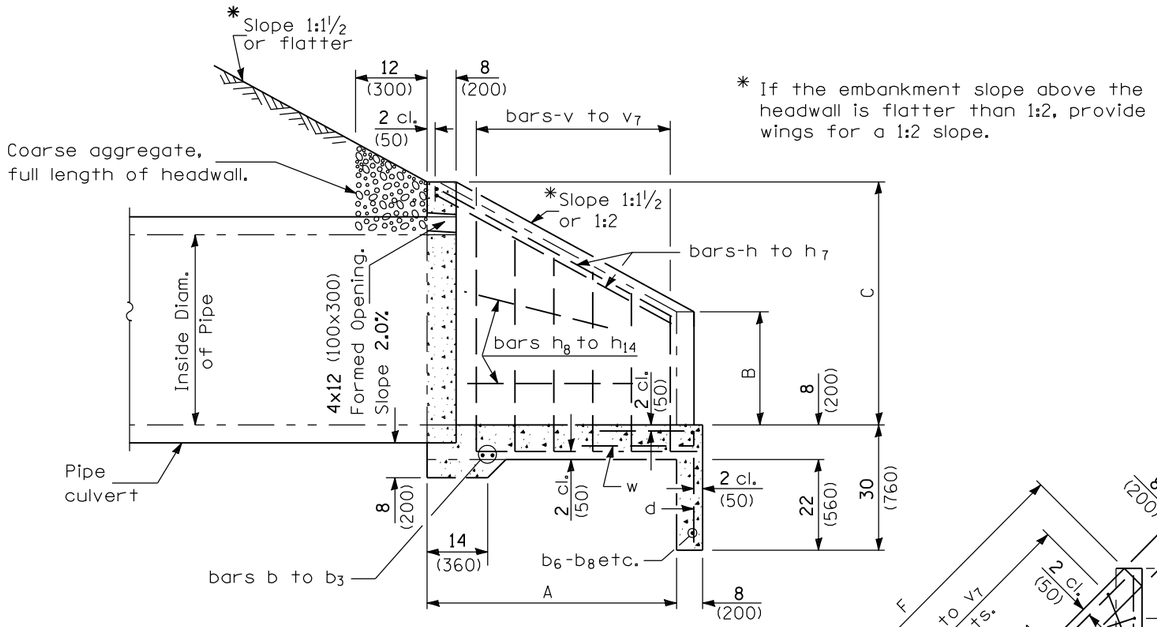

* If the embankment slope above the headwall is flatter than 1:2, provide wings for a 1:2 slope.

SECTION A-A

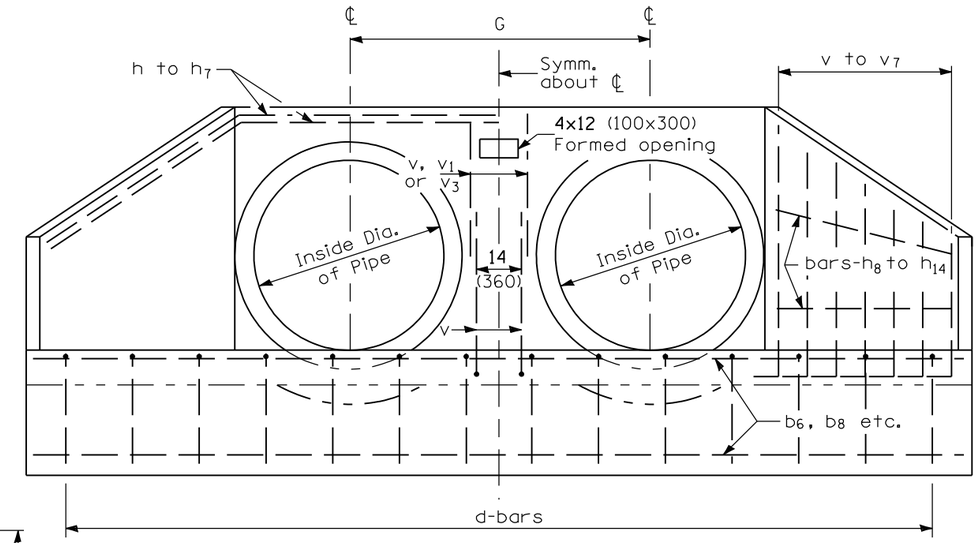

END ELEVATION

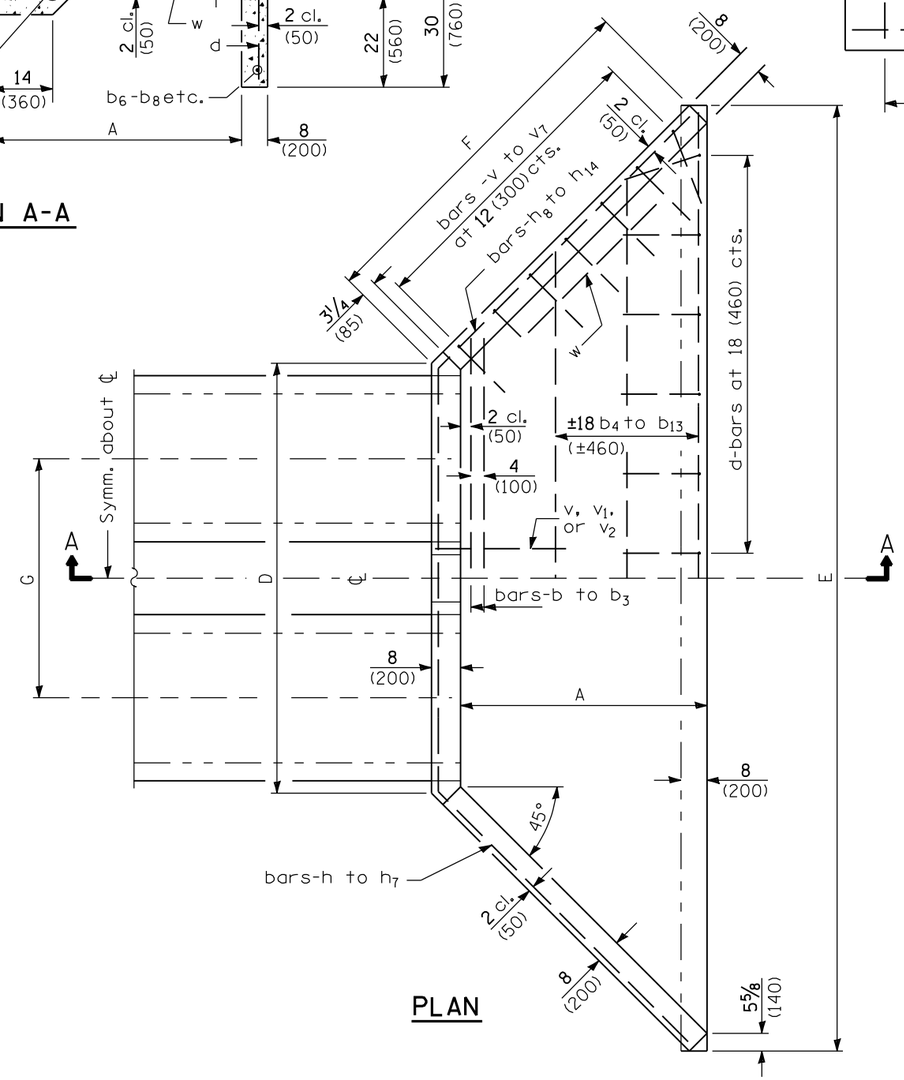

PLAN

GENERAL NOTES

All slope ratios are expressed as units of vertical displacement to units of horizontal displacement (V:H).

All dimensions are in inches (millimeters) unless otherwise shown.

Illinois Department of Transportation

APPROVED January 1, 2009
Ralph E. Anderson
ENGINEER OF BRIDGES AND STRUCTURES

APPROVED January 1, 2009
Eric L. Harm
ENGINEER OF DESIGN AND ENVIRONMENT

ISSUED 1-1-97

DATE	REVISIONS
1-1-09	Switched units to English (metric).
1-1-07	Soft converted metric reinforcement bars.

REINFORCED CONCRETE END SECTIONS FOR MULTIPLE (2 & 3) PIPE CULVERTS 42" (1050 mm) THRU 60" (1500 mm) DIA. AT RIGHT ANGLES WITH ROADWAY

(Sheet 1 of 3)

STANDARD 542121-02

DIMENSIONS OF STRAIGHT BARS

Bar	Size	Length 2-Pipes	Length 3-Pipes	Bar	Size	Length 2-Pipes	Length 3-Pipes
b	No. 5 (No. 16)	11′-9″ (3.58 m)	17′-6″ (5.33 m)	h_8	No. 4 (No. 13)	4′-9″ (1.45 m)	4′-9″ (1.45 m)
b_1	No. 5 (No. 16)	13′-0″ (3.96 m)	19′-3″ (5.87 m)	h_9	No. 4 (No. 13)	5′-3″ (1.6 m)	5′-3″ (1.6 m)
b_2	No. 5 (No. 16)	14′-0″ (4.27 m)	20′-9″ (6.32 m)	h_{10}	No. 4 (No. 13)	6′-0″ (1.83 m)	6′-0″ (1.83 m)
b_3	No. 5 (No. 16)	15′-3″ (4.65 m)	22′-9″ (6.94 m)	h_{11}	No. 4 (No. 13)	6′-6″ (1.98 m)	6′-6″ (1.98 m)
b_4	No. 4 (No. 13)	14′-6″ (4.42 m)	20′-6″ (6.25 m)	h_{12}	No. 4 (No. 13)	7′-3″ (2.21 m)	7′-3″ (2.21 m)
b_5	No. 4 (No. 13)	16′-3″ (4.95 m)	23′-0″ (7.01 m)	h_{13}	No. 4 (No. 13)	8′-0″ (2.44 m)	8′-0″ (2.44 m)
b_6	No. 4 (No. 13)	17′-3″ (5.26 m)	24′-0″ (7.32 m)	h_{14}	No. 4 (No. 13)	8′-9″ (2.67 m)	8′-9″ (2.67 m)
b_7	No. 4 (No. 13)	18′-0″ (5.49 m)	24′-6″ (7.47 m)	w	No. 4 (No. 13)	4′-0″ (1.22 m)	4′-0″ (1.22 m)
b_8	No. 4 (No. 13)	19′-0″ (5.79 m)	25′-3″ (7.7 m)				
b_9	No. 4 (No. 13)	20′-6″ (6.25 m)	26′-0″ (7.92 m)				
b_{10}	No. 4 (No. 13)	21′-3″ (6.48 m)	27′-0″ (8.23 m)				
b_{11}	No. 4 (No. 13)	23′-0″ (7.01 m)	27′-9″ (8.46 m)				
b_{12}	No. 4 (No. 13)	24′-0″ (7.32 m)	30′-6″ (9.3 m)				
b_{13}	No. 4 (No. 13)	26′-0″ (7.92 m)	34′-0″ (10.36 m)				

DIMENSIONS AND QUANTITIES

Design No.	Nominal Inside Dia. of Pipe	Slope of Wing Walls	Dimensions: For all Multiples of Pipes A	B	C	F	G	2 Pipes D	E	3 Pipes D	E	Quantities: 2 Pipes Concrete 2 End Secs. cu. yds. (m^3)	Reinf. Bars 2 End Secs. lbs. (kgs)	3 Pipes Concrete 2 End Secs. cu. yds. (m^3)	Reinf. Bars 2 End Secs. lbs. (kgs)
D42-1½ (D1.05-1½)	42 (1050)	1:1½	3′-4″ (1.01 m)	26 (660)	4′-4½″ (1.33 m)	5′-0″ (1.52 m)	5′-9″ (1.75 m)	10′-7″ (3.23 m)	17′-8″ (5.38 m)	16′-4″ (4.98 m)	23′-5″ (7.13 m)	7.1 (5.4)	440 (200)	9.3 (7.1)	540 (245)
D42-2 (D1.05-2)	42 (1050)	1:2	4′-5″ (1.35 m)	26 (660)	4′-4½″ (1.33 m)	6′-6¼″ (1.99 m)	5′-9″ (1.75 m)	10′-7″ (3.23 m)	19′-10″ (6.04 m)	16′-4″ (4.98 m)	25′-7″ (7.8 m)	8.8 (6.7)	540 (245)	11.4 (8.7)	640 (290)
D48-1½ (D1.2-1½)	48 (1200)	1:1½	3′-9″ (1.12 m)	29 (740)	4′-11″ (1.5 m)	5′-7″ (1.7 m)	6′-4″ (1.93 m)	11′-9″ (3.58 m)	19′-8″ (5.98 m)	18′-1″ (5.51 m)	26′-0″ (7.91 m)	8.4 (6.4)	510 (231)	11.1 (8.5)	610 (277)
D48-2 (D1.2-2)	48 (1200)	1:2	5′-0″ (1.52 m)	29 (740)	4′-11″ (1.5 m)	7′-4¼″ (2.24 m)	6′-4″ (1.93 m)	11′-9″ (3.58 m)	22′-2″ (6.75 m)	18′-1″ (5.51 m)	28′-6″ (8.68 m)	10.7 (8.2)	630 (286)	13.7 (10.5)	740 (336)
D54-1½ (D1.35-1½)	54 (1350)	1:1½	4′-2″ (1.27 m)	32 (810)	5′-5½″ (1.66 m)	6′-2″ (1.88 m)	6′-11″ (2.11 m)	12′-11″ (3.94 m)	21′-8″ (6.6 m)	19′-10″ (6.05 m)	28′-7″ (8.71 m)	10.0 (7.6)	580 (263)	13.1 (10.0)	700 (318)
D54-2 (D1.35-2)	54 (1350)	1:2	5′-7″ (1.7 m)	32 (810)	5′-5½″ (1.66 m)	8′-2″ (2.49 m)	6′-11″ (2.11 m)	12′-11″ (3.94 m)	24′-6″ (7.46 m)	19′-10″ (6.05 m)	31′-5″ (9.57 m)	12.8 (9.8)	670 (304)	16.3 (12.5)	800 (363)
D60-1½ (D1/5-1½)	60 (1500)	1:1½	4′-7″ (1.4 m)	35 (890)	6′-0″ (1.83 m)	6′-9″ (2.06 m)	7′-6″ (2.29 m)	14′-1″ (4.29 m)	23′-8″ (7.2 m)	21′-7″ (6.58 m)	31′-2″ (9.49 m)	11.7 (8.9)	650 (295)	15.3 (11.7)	790 (358)
D60-2 (D1.5-2)	60 (1500)	1:2	6′-2″ (1.88 m)	35 (890)	6′-0″ (1.83 m)	9′-0″ (2.74 m)	7′-6″ (2.29 m)	14′-11″ (4.29 m)	26′-10″ (8.16 m)	21′-7″ (6.58 m)	34′-4″ (10.45 m)	15.0 (11.5)	780 (354)	19.2 (14.7)	930 (422)

DIMENSIONS OF BENT BARS

No. 5 -bars v to v_7 (No. 16) Bars	c	Total Length	No. 5 -bars h to h_7 (No. 16) Bars	2-Pipes a	2-Pipes b	2-Pipes Total Length	3-Pipes a	3-Pipes b	3-Pipes Total Length
v	6′-0″ (1.83 m)	8′-0″ (2.44 m)	h	10′-5″ (3.18 m)	5′-2″ (1.57 m)	20′-9″ (6.32 m)	16′-2″ (4.93 m)	5′-2″ (1.57 m)	26′-6″ (8.07 m)
v_1	5′-6″ (1.68 m)	7′-6″ (2.29 m)	h_1	10′-5″ (3.18 m)	6′-8″ (2.03 m)	23′-9″ (7.24 m)	16′-2″ (4.93 m)	6′-8″ (2.03 m)	29′-6″ (8.99 m)
v_2	5′-0″ (1.52 m)	7′-0″ (2.13 m)	h_2	11′-7″ (3.53 m)	5′-10″ (1.78 m)	23′-3″ (7.09 m)	17′-11″ (5.46 m)	5′-11″ (1.80 m)	29′-9″ (9.06 m)
v_3	4′-6″ (1.37 m)	6′-6″ (1.98 m)	h_3	11′-7″ (3.53 m)	7′-7″ (2.31 m)	26′-9″ (8.15 m)	17′-11″ (5.46 m)	7′-6½″ (2.3 m)	33′-0″ (10.06 m)
v_4	4′-0″ (1.22 m)	6′-0″ (1.83 m)	h_4	12′-9″ (3.87 m)	6′-6″ (1.98 m)	25′-9″ (7.83 m)	19′-8″ (6.0 m)	6′-6½″ (2.0 m)	32′-9″ (10.0 m)
v_5	3′-6″ (1.07 m)	5′-6″ (1.68 m)	h_5	12′-9″ (3.87 m)	8′-3″ (2.51 m)	29′-0″ (8.89 m)	19′-8″ (6.0 m)	8′-3½″ (2.53 m)	36′-3″ (11.06 m)
v_6	36 (910)	5′-0″ (1.52 m)	h_6	12′-11″ (4.24 m)	7′-2″ (2.18 m)	28′-3″ (8.60 m)	21′-5″ (6.53 m)	7′-2″ (2.18 m)	35′-9″ (10.89 m)
v_7	30 (760)	4′-6″ (1.37 m)	h_7	13′-11″ (4.24 m)	9′-2″ (2.79 m)	32′-3″ (9.82 m)	21′-5″ (6.53 m)	9′-3½″ (2.83 m)	40′-0″ (12.19 m)

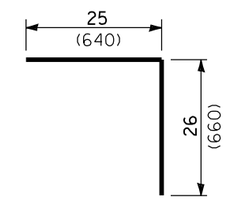

No. 4 (No. 13) BAR-d

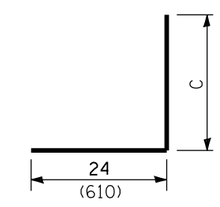

BARS - v to v_7

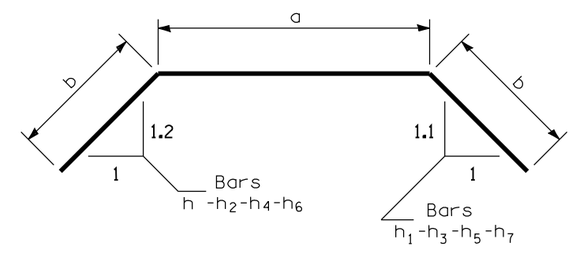

BARS - h to h_7

Bend in field
One Required in each headwall

Illinois Department of Transportation

APPROVED January 1, 2009
Ralph E. Anderson
ENGINEER OF BRIDGES AND STRUCTURES

APPROVED January 1, 2009
Eric E. Harm
ENGINEER OF DESIGN AND ENVIRONMENT

ISSUED 1-1-97

REINFORCED CONCRETE END SECTIONS
FOR MULTIPLE (2 & 3) PIPE CULVERTS
42″ (1050 mm) THRU 60″ (1500 mm) DIA.
AT RIGHT ANGLES WITH ROADWAY
(Sheet 2 of 3)

STANDARD 542121-02

BARS IN ONE END SECTION - 2 PIPES

42 Pipe (1050)				48 Pipe (1200)				54 Pipe (1350)				60 Pipe (1500)			
D42-1½ (D1.05-1½)		D42-2 (D1.05-2)		D48-1½ (D1.2-1½)		D48-2 (D1.2-2)		D54-1½ (D1.35-1½)		D54-2 (D1.35-2)		D60-1½ (D1.5-1½)		D60-2 (D1.5-2)	
BARS	No.	BARS	No.	BARS	No.	BARS	No.	BARS	No.	BARS	No.	BARS	No.	BARS	No.
d	12	d	13	d	13	d	15	d	14	d	16	d	16	d	18
b	2	b	2	b_1	2	b_1	2	b_2	2	b_2	2	b_3	2	b_3	2
b_4	1	b_4	1	b_5	1	b_5	1	b_6	1	b_6	1	b_7	1	b_7	1
b_6	2	b_6	1	b_8	2	b_8	1	b_8	1	b_9	1	b_9	1	b_9	1
		b_8	2			b_{10}	2	b_{10}	2	b_{12}	2	b_{11}	2	b_{12}	1
														b_{13}	2
h	2	h_1	2	h_2	2	h_3	2	h_4	2	h_5	2	h_6	2	h_7	2
h_8	4	h_{10}	4	h_9	4	h_{12}	4	h_{10}	4	h_{13}	4	h_{11}	4	h_{14}	4
v_7	6	v_7	8	v_7	4	v_7	4	v_6	4	v_6	6	v_5	6	v_5	8
v_4	4	v_4	6	v_5	4	v_5	8	v_4	4	v_4	6	v_3	4	v_3	6
v_3	2	v_3	2	v_3	4	v_2	4	v_1	4	v_1	4	v	6	v	6
				v_1	2	v_1	2	v	2	v	2				
w	2	w	2	w	2	w	2	w	2	w	2	w	2	w	2

BARS IN ONE END SECTION - 3 PIPES

42 Pipe (1050)				48 Pipe (1200)				54 Pipe (1350)				60 Pipe (1500)			
D42-1½ (D1.05-1½)		D42-2 (D1.05-2)		D48-1½ (D1.2-1½)		D48-2 (D1.2-2)		D54-1½ (D1.35-1½)		D54-2 (D1.35-2)		D60-1½ (D1.5-1½)		D60-2 (D1.5-2)	
BARS	No.	BARS	No.	BARS	No.	BARS	No.	BARS	No.	BARS	No.	BARS	No.	BARS	No.
d	15	d	17	d	17	d	19	d	19	d	21	d	21	d	23
b	2	b	2	b_1	2	b_1	2	b_2	2	b_2	2	b_3	2	b_3	2
b_4	1	b_4	1	b_5	1	b_5	1	b_6	1	b_7	1	b_8	1	b_8	1
b_5	2	b_5	1	b_8	2	b_8	1	b_9	1	b_{11}	1	b_{11}	1	b_{10}	1
		b_8	2			b_{11}	2	b_{11}	2	b_{12}	2	b_{12}	2	b_{12}	1
														b_{13}	2
h	2	h_1	2	h_2	2	h_3	2	h_4	2	h_5	2	h_6	2	h_7	2
h_8	4	h_{10}	4	h_9	4	h_{12}	4	h_{10}	4	h_{13}	4	h_{11}	4	h_{14}	4
v_7	6	v_7	8	v_7	4	v_7	4	v_6	4	v_6	6	v_5	6	v_5	8
v_4	4	v_4	6	v_5	4	v_5	8	v_4	4	v_4	6	v_3	4	v_3	6
v_3	2	v_3	2	v_3	4	v_2	4	v_1	4	v_1	4	v	6	v	6
				v_1	2	v_1	2	v	2	v	2				
w	2	w	2	w	2	w	2	w	2	w	2	w	2	w	2

Illinois Department of Transportation

APPROVED January 1, 2009
Ralph E. Anderson
ENGINEER OF BRIDGES AND STRUCTURES

APPROVED January 1, 2009
Eric E. Harm
ENGINEER OF DESIGN AND ENVIRONMENT

ISSUED 1-1-97

REINFORCED CONCRETE END SECTIONS
FOR MULTIPLE (2 & 3) PIPE CULVERTS
42" (1050 mm) THRU 60" (1500 mm) DIA.
AT RIGHT ANGLES WITH ROADWAY
(Sheet 3 of 3)

STANDARD 542121-02

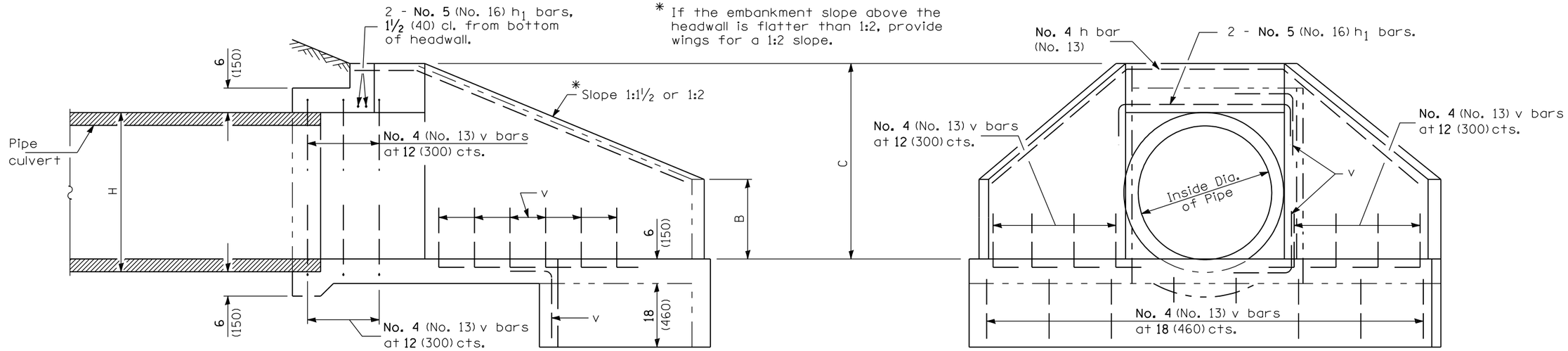

SECTION A-A

END VIEW

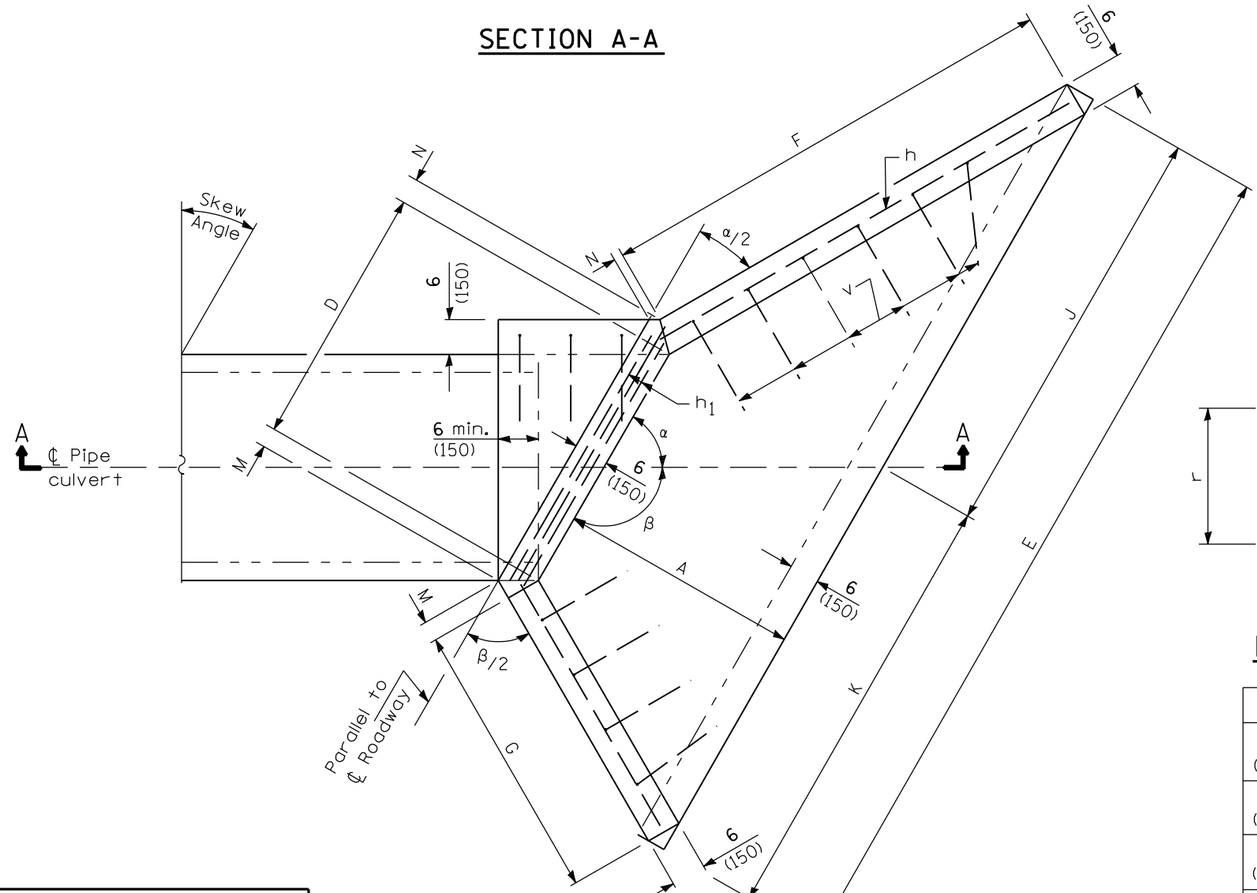

PLAN

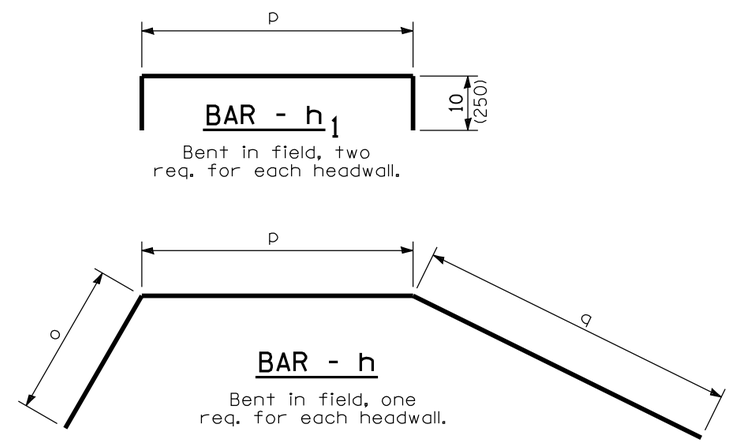

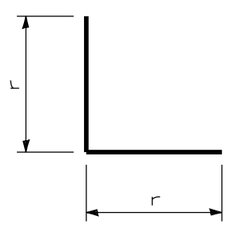

BAR - v

Dia.	r
15 (375)	21 (551)
18 (450)	24 (626)
24 (600)	30 (765)
30 (750)	36 (917)
36 (900)	3'-6" (1.08 m)

GENERAL NOTES

Build tops of headwalls parallel to grade line.

All slope ratios are expressed as units of vertical displacement to units of horizontal displacement (V:H).

All dimensions are in inches (millimeters) unless otherwise shown.

Illinois Department of Transportation

APPROVED January 1, 2009
Ralph E. Anderson
ENGINEER OF BRIDGES AND STRUCTURES

APPROVED January 1, 2009
Eric E. Harm
ENGINEER OF DESIGN AND ENVIRONMENT

ISSUED 1-1-97

DATE	REVISIONS
1-1-09	Switched units to
	English (metric).
1-1-07	Soft converted metric
	reinforcement bars.
	Added h_1 bars.

REINFORCED CONCRETE END SECTIONS FOR PIPE CULVERTS 15" (375 mm) THRU 36" (900 mm) DIA. SKEWED WITH ROADWAY

(Sheet 1 of 5)

STANDARD 542201-02

WINGS FOR 1:1½ SLOPE

Skew Angle	Design No.	Nominal Pipe Dia.	DIMENSIONS FOR CONCRETE A	B	C	D	E	F	G	H	J	K	M	N	α	Concrete 2 End Sections yd³ (m³)	Reinf. Bars - 2 End Sections h - bars o	p	q	Lgth.	h₁ - bars p	Lgth.	v-bars No.	Bars for 2 End Sections lbs. (kg)
5°	DS 15-1½ (DS 375-1½)	15 (375)	28 (720)	10 (260)	29 (740)	19 (485)	6′-11¾″ (2.15 m)	3′-5½″ (1.07 m)	38 (980)	19 (483)	3′-5¾″ (1.07 m)	3′-6″ (1.08 m)	2¾ (70)	2¼ (60)	85°	1.4 (1.1)	3′-6″ (1.01 m)	21 (551)	3′-9″ (1.09 m)	9′-0″ (2.65 m)	21 (551)	3′-5″ (1.04 m)	28	90 (41)
	DS 18-1½ (DS 450-1½)	18 (450)	28 (720)	13 (330)	32 (810)	22 (561)	7′-2¾″ (2.22 m)	3′-5½″ (1.07 m)	38 (980)	22 (559)	3′-7¼″ (1.11 m)	3′-7½″ (1.11 m)	2¾ (70)	2¼ (60)	85°	1.6 (1.2)	3′-6″ (1.03 m)	24 (626)	3′-9″ (1.12 m)	9′-3″ (2.78 m)	24 (626)	3′-8″ (1.12 m)	28	100 (45)
	DS 24-1½ (DS 600-1½)	24 (600)	34 (870)	16 (410)	39 (990)	30 (765)	8′-10¾″ (2.73 m)	4′-2¼″ (1.29 m)	3′-10″ (1.18 m)	30 (762)	4′-5¼″ (1.36 m)	4′-5½″ (1.37 m)	2¾ (70)	2¼ (60)	85°	2.2 (1.7)	4′-3″ (1.23 m)	32 (832)	4′-7″ (1.33 m)	11′-6″ (3.39 m)	32 (832)	4′-4″ (1.32 m)	32	140 (63)
	DS 30-1½ (DS 750-1½)	30 (750)	39 (990)	19 (480)	3′-9″ (1140)	36 (917)	10′-3″ (3.12 m)	4′-9¾″ (1.47 m)	4′-5″ (1.35 m)	36 (914)	5′-1¼″ (1.56 m)	5′-1¾″ (1.56 m)	2¾ (70)	2¼ (60)	85°	2.7 (2.1)	4′-10″ (1.39 m)	39 (983)	5′-2″ (1.51 m)	13′-3″ (3.88 m)	39 (983)	4′-11″ (1.50 m)	36	180 (81)
	DS 36-1½ (DS 900-1½)	36 (900)	3′-9″ (1140)	22 (560)	4′-4″ (1320)	3′-8¼″ (1123)	11′-11″ (3.63 m)	5′-6½″ (1.69 m)	5′-1″ (1.55 m)	3′-8″ (1.119 m)	5′-11¼″ (1.81 m)	5′-11¾″ (1.82 m)	2¾ (70)	2¼ (60)	85°	3.3 (2.5)	5′-7″ (1.6 m)	3′-11″ (1.19 m)	6′-0″ (1.73 m)	15′-6″ (4.52 m)	3′-11″ (1.19 m)	5′-7″ (1.70 m)	42	240 (108)
10°	DS 15-1½ (DS 375-1½)	15 (375)	28 (720)	10 (260)	29 (740)	19¼ (490)	7′-0½″ (2.17 m)	3′-7½″ (1.12 m)	36½ (940)	19 (483)	3′-6″ (1.08 m)	3′-6½″ (1.09 m)	2¾ (70)	2¼ (60)	80°	1.5 (1.2)	3′-4″ (972)	22 (557)	3′-10″ (1.14 m)	9′-0″ (2.67 m)	22 (557)	3′-6″ (1.07 m)	28	90 (41)
	DS 18-1½ (DS 450-1½)	18 (450)	28 (720)	13 (330)	32 (810)	22¼ (568)	7′-3¾″ (2.24 m)	3′-7½″ (1.12 m)	36½ (940)	22 (559)	3′-7½″ (1.11 m)	3′-8¼″ (1.13 m)	2¾ (70)	2¼ (60)	80°	1.6 (1.2)	3′-4″ (990)	25 (633)	3′-10″ (1.17 m)	9′-3″ (2.8 m)	25 (633)	3′-9″ (1.14 m)	28	100 (45)
	DS 24-1½ (DS 600-1½)	24 (600)	34 (870)	16 (410)	39 (990)	30½ (774)	9′-0″ (2.76 m)	4′-5″ (1.36 m)	3′-8½″ (1.14 m)	30 (762)	4′-5¾″ (1.37 m)	4′-6¼″ (1.39 m)	2¾ (70)	2¼ (60)	80°	2.2 (1.7)	4′-1″ (1.18 m)	33 (841)	4′-8″ (1.4 m)	11′-6″ (3.42 m)	33 (841)	4′-5″ (1.35 m)	34	150 (68)
	DS 30-1½ (DS 750-1½)	30 (750)	39 (990)	19 (480)	3′-9″ (1140)	36½ (928)	10′-4½″ (3.15 m)	5′-0¾″ (1.54 m)	4′-3″ (1.3 m)	36 (914)	5′-1¾″ (1.57 m)	5′-2½″ (1.58 m)	2¾ (70)	2¼ (60)	80°	2.8 (2.1)	4′-9″ (1.34 m)	39 (993)	5′-6″ (1.58 m)	13′-6″ (3.92 m)	39 (993)	4′-11″ (1.50 m)	36	180 (81)
	DS 36-1½ (DS 900-1½)	36 (900)	3′-9″ (1140)	22 (560)	4′-4″ (1320)	3′-8¾″ (1136)	12′-0½″ (3.67 m)	5′-10″ (1.78 m)	4′-10¾″ (1.49 m)	3′-8″ (1.119 m)	6′-0″ (1.83 m)	6′-0½″ (1.84 m)	2¾ (70)	2¼ (60)	80°	3.5 (2.7)	5′-6″ (1.54 m)	3′-11″ (1.2 m)	6′-4″ (1.82 m)	15′-9″ (4.56 m)	3′-11″ (1.2 m)	5′-7″ (1.70 m)	42	240 (108)
15°	DS 15-1½ (DS 375-1½)	15 (375)	28 (720)	10 (260)	29 (740)	19¾ (500)	7′-2″ (2.2 m)	3′-10″ (1.19 m)	35¼ (910)	19 (483)	3′-6½″ (1.09 m)	3′-7½″ (1.11 m)	3 (80)	2 (50)	75°	1.5 (1.2)	3′-4″ (942)	22 (567)	4′-1″ (1.2 m)	9′-3″ (2.71 m)	22 (567)	3′-6″ (1.07 m)	28	90 (41)
	DS 18-1½ (DS 450-1½)	18 (450)	28 (720)	13 (330)	32 (810)	22¾ (579)	7′-5¼″ (2.28 m)	3′-10″ (1.19 m)	35¼ (910)	22 (559)	3′-8 ″ (1.13 m)	3′-9¼″ (1.15 m)	3 (80)	2 (50)	75°	1.7 (1.3)	3′-4″ (965)	25 (644)	4′-1″ (1.23 m)	9′-6″ (2.84 m)	25 (644)	3′-9″ (1.14 m)	28	100 (45)
	DS 24-1½ (DS 600-1½)	24 (600)	34 (870)	16 (410)	39 (990)	31 (789)	9′-2″ (2.8 m)	4′-7¾″ (1.43 m)	3′-6¾″ (1.1 m)	30 (762)	4′-6½″ (1.39 m)	4′-7½″ (1.41 m)	3 (80)	2 (50)	75°	2.3 (1.8)	4′-0″ (1.15 m)	34 (857)	4′-11″ (1.47 m)	11′-9″ (3.47 m)	34 (857)	4′-6″ 1.37 m)	34	150 (68)
	DS 30-1½ (DS 750-1½)	30 (750)	39 (990)	19 (480)	3′-9″ (1140)	37¼ (946)	10′-6½″ (3.21 m)	5′-4″ (1.63 m)	4′-1¼″ (1.25 m)	36 (914)	5′-2¾″ (1.59 m)	5′-3¾″ (1.62 m)	3 (80)	2 (50)	75°	2.9 (2.2)	4′-8″ (1.3 m)	3′-4″ (1.01 m)	5′-9″ (1.67 m)	13′-9″ (3.98 m)	3′-4″ (1.01 m)	5′-0″ (1.52 m)	40	200 (90)
	DS 36-1½ (DS 900-1½)	36 (900)	3′-9″ (1140)	22 (560)	4′-4″ (1320)	3′-9½″ (1158)	12′-3¼″ (3.73 m)	6′-2″ (1.87 m)	4′-8¾″ (1.44 m)	3′-8″ (1.119 m)	6′-1″ (1.85 m)	6′-2¼″ (1.88 m)	3 (80)	2 (50)	75°	3.8 (2.9)	5′-3″ (1.49 m)	4′-0″ (1.22 m)	6′-6″ (1.92 m)	15′-9″ (4.63 m)	4′-0″ (1.22 m)	5′-8″ (1.73 m)	46	260 (117)
20°	DS 15-1½ (DS 375-1½)	15 (375)	28 (720)	10 (260)	29 (740)	20¼ (514)	7′-4″ (2.26 m)	4′-0¾″ (1.26 m)	34¼ (880)	19 (483)	3′-7¼″ (1.11 m)	3′-8¾″ (1.15 m)	3 (80)	2 (50)	70°	1.6 (1.2)	39 (916)	23 (581)	4′-4″ (1.27 m)	9′-6″ (2.77 m)	23 (581)	3′-7″ (1.09 m)	28	90 (41)
	DS 18-1½ (DS 450-1½)	18 (450)	28 (720)	13 (330)	32 (810)	23½ (595)	7′-7½″ (2.34 m)	4′-0¾″ (1.26 m)	34¼ (880)	22 (559)	3′-9″ (1.15 m)	3′-10½″ (1.19 m)	3 (80)	2 (50)	70°	1.7 (1.3)	39 (938)	26 (661)	4′-4″ (1.31 m)	9′-9″ (2.9 m)	26 (661)	3′-10″ (1.17 m)	28	100 (45)
	DS 24-1½ (DS 600-1½)	24 (600)	34 (870)	16 (410)	39 (990)	32 (811)	9′-4½″ (2.87 m)	4′-11¼″ (1.52 m)	3′-5½″ (1.07 m)	30 (762)	4′-7½″ (1.42 m)	4′-9″ (1.45 m)	3 (80)	2 (50)	70°	2.4 (1.8)	3′-11″ (1.11 m)	35 (879)	5′-2″ (1.56 m)	12′-0″ (3.55 m)	35 (879)	4′-7″ (1.40 m)	38	160 (72)
	DS 30-1½ (DS 750-1½)	30 (750)	39 (990)	19 (480)	3′-9″ (1140)	28¼ (973)	10′-9¾″ (3.29 m)	5′-8″ (1.73 m)	3′-11½″ (1.21 m)	36 (914)	5′-4¼″ (1.63 m)	5′-5½″ (1.66 m)	3 (80)	2 (50)	70°	3.1 (2.4)	4′-5″ (1.26 m)	3′-5″ (1.04 m)	5′-11″ (1.77 m)	13′-9″ (4.07 m)	3′-5″ (1.04 m)	5′-1″ (1.55 m)	42	210 (95)
	DS 36-1½ (DS 900-1½)	36 (900)	3′-9″ (1140)	22 (560)	4′-4″ (1320)	3′-10¾″ (1191)	12′-7″ (3.86 m)	6′-6½″ (1.99 m)	4′-7″ (1.41 m)	3′-8″ (1.119 m)	6′-2¾″ (1.9 m)	6′-4¼″ (1.93 m)	3 (80)	2 (50)	70°	4.0 (3.1)	5′-3″ (1.45 m)	4′-1″ (1.26 m)	6′-11″ (2.03 m)	16′-3″ (4.73 m)	4′-1″ (1.26 m)	5′-9″ (1.75 m)	50	280 (126)
25°	DS 15-1½ (DS 375-1½)	15 (375)	28 (720)	10 (260)	29 (740)	21 (533)	7′-7″ (2.33 m)	4′-4″ (1.34 m)	33¼ (860)	19 (483)	3′-8½″ (1.14 m)	3′-10½″ (1.19 m)	3¼ (90)	1¾ (50)	65°	1.6 (1.2)	39 (893)	23 (600)	4′-7″ (1.36 m)	9′-9″ (2.85 m)	23 (600)	3′-7″ (1.09 m)	28	90 (41)
	DS 18-1½ (DS 450-1½)	18 (450)	28 (720)	13 (330)	32 (810)	24¼ (617)	7′-10¼″ (2.42 m)	4′-4″ (1.34 m)	33¼ (860)	22 (559)	3′-10¼″ (1.19 m)	4′-0″ (1.23 m)	3¼ (90)	1¾ (50)	65°	1.8 (1.4)	38 (914)	27 (683)	4′-7″ (1.39 m)	10′-0″ (2.99 m)	27 (683)	3′-11″ (1.19 m)	32	120 (54)
	DS 24-1½ (DS 600-1½)	24 (600)	34 (870)	16 (410)	39 (990)	33 (841)	9′-8½″ (2.97 m)	5′-3¼″ (1.62 m)	3′-4¼″ (1.04 m)	30 (762)	4′-9¼″ (1.46 m)	4′-11¼″ (1.51 m)	3¼ (90)	1¾ (50)	65°	2.5 (1.9)	3′-10″ (1.09 m)	35 (909)	5′-6″ (1.66 m)	12′-3″ (3.65 m)	35 (909)	4′-7″ (1.40 m)	38	160 (72)
	DS 30-1½ (DS 750-1½)	30 (750)	39 (990)	19 (480)	3′-9″ (1140)	3′-3¾″ (1008)	11′-2″ (3.4 m)	6′-0½″ (1.83 m)	3′-10¼″ (1.18 m)	36 (914)	5′-6″ (1.68 m)	5′-8″ (1.72 m)	3¼ (90)	1¾ (50)	65°	3.3 (2.5)	4′-5″ (1.23 m)	3′-6″ (1.08 m)	6′-4″ (1.88 m)	14′-3″ (4.18 m)	3′-6″ (1.08 m)	5′-2″ (1.58 m)	44	220 (99)
	DS 36-1½ (DS 900-1½)	36 (900)	3′-9″ (1140)	22 (560)	4′-4″ (1320)	4′-0½″ (1235)	13′-0¼″ (3.96 m)	6′-11¾″ (2.12 m)	4′-5¼″ (1.36 m)	3′-8″ (1.119 m)	6′-5¼″ (1.96 m)	6′-7″ (2 m)	3¼ (90)	1¾ (50)	65°	4.3 (3.3)	5′-0″ (1.41 m)	4′-3″ (1.3 m)	7′-3″ (2.16 m)	16′-6″ (4.87 m)	4′-3″ (1.3 m)	5′-11″ (1.80 m)	50	280 (126)
30°	DS 15-1½ (DS 375-1½)	15 (375)	28 (720)	10 (260)	29 (740)	22 (558)	7′-10¾″ (2.43 m)	4′-8″ (1.44 m)	32¼ (830)	19 (483)	3′-10¼″ (1.19 m)	4′-0½″ (1.24 m)	3¼ (90)	1½ (40)	60°	1.7 (1.3)	37 (873)	24 (626)	4′-11″ (1.46 m)	10′-0″ (2.95 m)	24 (626)	3′-8″ (1.12 m)	36	110 (50)
	DS 18-1½ (DS 450-1½)	18 (450)	28 (720)	13 (330)	32 (810)	25½ (645)	8′-2¼″ (2.52 m)	4′-8″ (1.44 m)	32¼ (830)	22 (559)	4′-0″ (1.23 m)	4′-2¼″ (1.29 m)	3¼ (90)	1½ (40)	60°	1.9 (1.5)	38 (893)	28 (712)	5′-0″ (1.49 m)	10′-6″ (3.1 m)	28 (712)	4′-0″ (1.22 m)	36	130 (59)
	DS 24-1½ (DS 600-1½)	24 (600)	34 (870)	16 (410)	39 (990)	34¾ (880)	10′-1¼″ (3.1 m)	5′-8″ (1.74 m)	3′-3¼″ (1.01 m)	30 (762)	4′-11½″ (1.52 m)	5′-1¾″ (1.58 m)	3¼ (90)	1½ (40)	60°	2.7 (2.1)	3′-9″ (1.06 m)	37 (949)	5′-11″ (1.78 m)	12′-9″ (3.79 m)	37 (949)	4′-9″ (1.45 m)	40	170 (77)
	DS 30-1½ (DS 750-1½)	30 (750)	39 (990)	19 (480)	3′-9″ (1140)	3′-5½″ (1055)	11′-7¾″ (3.55 m)	6′-6″ (1.98 m)	3′-9″ (1.15 m)	36 (914)	5′-8¾″ (1.75 m)	5′-11″ (1.8 m)	3¼ (90)	1½ (40)	60°	3.5 (2.7)	4′-4″ (1.2 m)	3′-8″ (1.12 m)	6′-9″ (2.02 m)	14′-9″ (4.34 m)	3′-8″ (1.12 m)	5′-4″ (1.63 m)	46	230 (104)
	DS 36-1½ (DS 900-1½)	36 (900)	3′-9″ (1140)	22 (560)	4′-4″ (1320)	4′-2¾″ (1292)	13′-7″ (4.13 m)	7′-6″ (2.28 m)	4′-4″ (1.32 m)	3′-8″ (1.119 m)	6′-8½″ (2.04 m)	6′-10½″ (2.09 m)	3¼ (90)	1½ (40)	60°	4.6 (3.5)	5′-0″ (1.37 m)	4′-5″ (1.36 m)	7′-10″ (2.32 m)	17′-3″ (5.05 m)	4′-5″ (1.36 m)	6′-1″ (1.86 m)	54	300 (135)

Illinois Department of Transportation

APPROVED January 1, 2009
Ralph E. Anderson
ENGINEER OF BRIDGES AND STRUCTURES

APPROVED January 1, 2009
Eric E. Harm
ENGINEER OF DESIGN AND ENVIRONMENT

ISSUED 1-1-97

REINFORCED CONCRETE END SECTIONS
FOR PIPE CULVERTS
15″ (375 mm) THRU 36″ (900 mm) DIA.
SKEWED WITH ROADWAY
(Sheet 2 of 5)

STANDARD 542201-02

WINGS FOR 1:1½ SLOPE

Skew Angle	Design No.	Nominal Pipe Dia.	DIMENSIONS FOR CONCRETE A	B	C	D	E	F	G	H	J	K	M	N	α	Concrete 2 End Sections yd³ (m³)	Reinf. Bars - 2 End Sections h - bars o	p	q	Lgth.	h₁ - bars p	Lgth.	v-bars No.	Bars for 2 End Sections lbs. (kg)
35°	DS 15-1½ (DS 375-1½)	15 (375)	28 (720)	10 (260)	29 (740)	23¼ (590)	8'-3¾" (2.55 m)	5'-0¾" (1.56 m)	31½ (820)	19 (483)	4'-0½" (1.24 m)	4'-3" (1.31 m)	3¾ (90)	1½ (40)	55°	1.8 (1.4)	37 (855)	26 (658)	5'-3" (1.57 m)	10'-6" (3.09 m)	26 (658)	3'-10" (1.17 m)	36	110 (50)
	DS 18-1½ (DS 450-1½)	18 (450)	28 (720)	13 (330)	32 (810)	27 (682)	8'-7¼" (2.65 m)	5'-0¾" (1.56 m)	31½ (820)	22 (559)	4'-2¼" (1.29 m)	4'-5" (1.36 m)	3¾ (90)	1½ (40)	55°	2.0 (1.5)	37 (876)	29 (750)	5'-3" (1.61 m)	10'-9" (3.24 m)	29 (750)	4'-1" (1.25 m)	36	130 (59)
	DS 24-1½ (DS 600-1½)	24 (600)	34 (870)	16 (410)	39 (990)	36½ (930)	10'-7¾" (3.26 m)	6'-1¾" (1.88 m)	38¼ (980)	30 (762)	5'-2½" (1.6 m)	5'-5¼" (1.66 m)	3¾ (90)	1½ (40)	55°	2.9 (2.2)	3'-8" (1.04 m)	39 (1.0 m)	6'-4" (1.92 m)	13'-3" (3.96 m)	39 (1.0 m)	4'-11" (1.50 m)	40	170 (77)
	DS 30-1½ (DS 750-1½)	30 (750)	39 (990)	19 (480)	3'-9" (1140)	3'-8" (1.116 m)	12'-3¼" (3.74 m)	7'-0½" (2.15 m)	3'-8" (1.12 m)	36 (914)	6'-0¼" (1.84 m)	6'-3" (1.9 m)	3¾ (90)	1½ (40)	55°	3.7 (2.8)	4'-2" (1.17 m)	3'-11" (1.18 m)	7'-2" (2.18 m)	15'-3" (4.54 m)	3'-11" (1.18 m)	5'-7" (1.70 m)	50	240 (108)
	DS 36-1½ (DS 900-1½)	36 (900)	3'-9" (1140)	22 (560)	4'-4" (1320)	4'-5¾" (1.366 m)	14'-3¾" (4.35 m)	8'-1½" (2.47 m)	4'-2¾" (1.3 m)	3'-8" (1.119 m)	7'-0½" (2.14 m)	7'-3¼" (2.21 m)	3¾ (90)	1½ (40)	55°	4.9 (3.8)	4'-11" (1.34 m)	4'-8" (1.43 m)	8'-5" (2.51 m)	18'-0" (5.29 m)	4'-8" (1.43 m)	6'-4" (1.93 m)	56	310 (140)
40°	DS 15-1½ (DS 375-1½)	15 (375)	28 (720)	10 (260)	29 (740)	24¾ (631)	8'-10" (2.71 m)	5'-6¼" (1.71 m)	31 (780)	19 (483)	4'-3½" (1.32 m)	4'-6½" (1.39 m)	3¾ (100)	1¼ (40)	50°	1.9 (1.5)	37 (840)	27 (700)	5'-8" (1.71 m)	11'-0" (3.25 m)	27 (700)	3'-11" (1.19 m)	38	120 (54)
	DS 18-1½ (DS 450-1½)	18 (450)	28 (720)	13 (330)	32 (810)	28¾ (730)	9'-1¾" (2.81 m)	5'-6¼" (1.71 m)	31 (780)	22 (559)	4'-5½" (1.37 m)	4'-8¼" (1.44 m)	3¾ (100)	1¼ (40)	50°	2.2 (1.7)	36 (860)	31 (798)	5'-8" (1.76 m)	11'-3" (3.41 m)	31 (798)	4'-3" (1.30 m)	38	130 (59)
	DS 24-1½ (DS 600-1½)	24 (600)	34 (870)	16 (410)	39 (990)	3'-3¼" (995)	11'-4" (3.47 m)	6'-8½" (2.08 m)	37½ (960)	30 (762)	5'-6½" (1.7 m)	5'-9½" (1.77 m)	3¾ (100)	1¼ (40)	50°	3.1 (2.4)	3'-8" (1.02 m)	3'-6" (1.07 m)	6'-10" (2.1 m)	14'-0" (4.18 m)	3'-6" (1.07 m)	5'-2" (1.58 m)	48	200 (90)
	DS 30-1½ (DS 750-1½)	30 (750)	39 (990)	19 (480)	3'-9" (1140)	3'-11" (1.193 m)	13'-0¾" (3.98 m)	7'-8¼" (2.35 m)	3'-7" (1.1 m)	36 (914)	6'-5" (1.95 m)	6'-7¾" (2.03 m)	3¾ (100)	1¼ (40)	50°	4.0 (3.1)	4'-2" (1.15 m)	4'-2" (1.26 m)	7'-11" (2.38 m)	16'-3" (4.79 m)	4'-2" (1.26 m)	5'-10" (1.78 m)	54	260 (117)
	DS 36-1½ (DS 900-1½)	36 (900)	3'-9" (1140)	22 (560)	4'-4" (1320)	4'-9½" (1.461 m)	15'-3" (4.64 m)	8'-10½" (2.7 m)	4'-1¾" (1.26 m)	3'-8" (1.119 m)	7'-6" (2.28 m)	7'-9" (2.35 m)	3¾ (100)	1¼ (40)	50°	5.3 (4.1)	4'-10" (1.32 m)	5'-0" (1.53 m)	9'-2" (2.74 m)	19'-0" (5.59 m)	5'-0" (1.53 m)	6'-8" (2.03 m)	62	340 (153)
45°	DS 15-1½ (DS 375-1½)	15 (375)	28 (720)	10 (260)	29 (740)	27 (683)	9'-6" (2.92 m)	6'-1¼" (1.88 m)	30¼ (780)	19 (483)	4'-7½" (1.42 m)	4'-10½" (1.5 m)	4 (100)	1¼ (30)	45°	2.1 (1.6)	36 (829)	29 (753)	6'-1" (1.89 m)	11'-6" (3.47 m)	29 (753)	4'-1" (1.25 m)	40	130 (59)
	DS 18-1½ (DS 450-1½)	18 (450)	28 (720)	13 (330)	32 (810)	31 (791)	9'-10¼" (3.03 m)	6'-1¼" (1.88 m)	30¼ (780)	22 (559)	4'-9½" (1.47 m)	5'-0¾" (1.56 m)	4 (100)	1¼ (30)	45°	2.4 (1.8)	36 (847)	34 (859)	6'-2" (1.94 m)	12'-0" (3.64 m)	34 (859)	4'-6" (1.37 m)	44	150 (68)
	DS 24-1½ (DS 600-1½)	24 (600)	34 (870)	16 (410)	39 (990)	3'-6½" (1.078 m)	12'-3½" (3.74 m)	7'-4¾" (2.28 m)	36¾ (950)	30 (762)	5'-11½" (1.83 m)	6'-3" (1.91 m)	4 (100)	1¼ (30)	45°	3.4 (2.6)	3'-8" (1.0 m)	3'-9" (1.15 m)	7'-7" (2.31 m)	15'-0" (4.47 m)	3'-9" (1.15 m)	5'-5" (1.65 m)	50	210 (95)
	DS 30-1½ (DS 750-1½)	30 (750)	39 (990)	19 (480)	3'-9" (1140)	4'-3" (1.293 m)	14'-1" (4.29 m)	8'-6" (2.59 m)	3'-6¼" (1.08 m)	36 (914)	6'-11" (2.1 m)	7'-2" (2.19 m)	4 (100)	1¼ (30)	45°	4.4 (3.4)	4'-2" (1.13 m)	4'-5" (1.36 m)	8'-8" (2.63 m)	17'-3" (5.12 m)	4'-5" (1.36 m)	6'-1" (1.86 m)	62	300 (135)
	DS 36-1½ (DS 900-1½)	36 (900)	3'-9" (1140)	22 (560)	4'-4" (1320)	5'-2¼" (1.583 m)	16'-5¼" (5.01 m)	9'-9½" (2.98 m)	4'-0¾" (1.24 m)	3'-8" (1.119 m)	8'-1" (2.46 m)	8'-4¼" (2.55 m)	4 (100)	1¼ (30)	45°	5.7 (4.4)	4'-10" (1.3 m)	5'-5" (1.65 m)	10'-0" (3.02 m)	20'-3" (5.97 m)	5'-5" (1.65 m)	7'-1" (2.16 m)	66	370 (167)
50°	DS 15-1½ (DS 375-1½)	15 (375)	28 (720)	10 (260)	29 (740)	29½ (751)	10'-4½" (3.18 m)	6'-10" (2.11 m)	29¾ (770)	19 (483)	5'-0½" (1.55 m)	5'-4" (1.64 m)	4¼ (110)	1 (30)	40°	2.3 (1.8)	35 (817)	32 (822)	6'-11" (2.11 m)	12'-6" (3.75 m)	32 (822)	4'-4" (1.32 m)	46	140 (63)
	DS 18-1½ (DS 450-1½)	18 (450)	28 (720)	13 (330)	32 (810)	24¼ (870)	10'-9" (3.31 m)	6'-10" (2.11 m)	29¾ (770)	22 (559)	5'-2¾" (1.61 m)	5'-6¼" (1.7 m)	4¼ (110)	1 (30)	40°	2.6 (2.0)	36 (836)	37 (939)	6'-11" (2.16 m)	13'-0" (3.94 m)	37 (939)	4'-9" (1.45 m)	46	160 (72)
	DS 24-1½ (DS 600-1½)	24 (600)	34 (870)	16 (410)	39 (990)	3'-10¾" (1.185 m)	13'-4¼" (4.08 m)	8'-3½" (2.55 m)	36¼ (930)	30 (762)	6'-6¼" (2 m)	6'-10" (2.09 m)	4¼ (110)	1 (30)	40°	3.7 (2.8)	3'-7" (990)	4'-1" (1.26 m)	8'-4" (2.58 m)	16'-0" (4.83 m)	4'-1" (1.26 m)	5'-9" (1.75 m)	56	230 (104)
	DS 30-1½ (DS 750-1½)	30 (750)	39 (990)	19 (480)	3'-9" (1140)	4'-8" (1.422 m)	15'-5" (4.7 m)	9'-6" (2.9 m)	3'-5½" (1.06 m)	36 (914)	7'-6¾" (2.3 m)	7'-10¼" (2.39 m)	4¼ (110)	1 (30)	40°	4.8 (3.7)	4'-1" (1.12 m)	4'-10" (1.49 m)	9'-7" (2.94 m)	18'-6" (5.54 m)	4'-10" (1.49 m)	6'-6" (1.98 m)	66	320 (144)
	DS 36-1½ (DS 900-1½)	36 (900)	3'-9" (1140)	22 (560)	4'-4" (1320)	5'-8½" (1.741 m)	18'-0¼" (5.48 m)	10'-11½" (3.34 m)	4'-0" (1.22 m)	3'-8" (1.119 m)	8'-10¼" (2.7 m)	9'-2" (2.78 m)	4¼ (110)	1 (30)	40°	6.3 (4.8)	4'-9" (1.28 m)	5'-11" (1.81 m)	11'-1" (3.38 m)	21'-9" (6.47 m)	5'-11" (1.81 m)	7'-7" (2.31 m)	74	410 (185)
55°	DS 15-1½ (DS 375-1½)	15 (375)	28 (720)	10 (260)	29 (740)	33 (842)	11'-6¼" (3.54 m)	7'-9" (2.4 m)	29¼ (760)	19 (483)	5'-7¼" (1.72 m)	5'-11" (1.82 m)	4½ (110)	1 (30)	35°	2.6 (2.0)	35 (809)	36 (914)	7'-10" (2.4 m)	13'-9" (4.12 m)	36 (914)	4'-8" (1.42 m)	50	150 (68)
	DS 18-1½ (DS 450-1½)	18 (450)	28 (720)	13 (330)	32 (810)	38¼ (975)	11'-11½" (3.68 m)	7'-9" (2.4 m)	29¼ (760)	22 (559)	5'-9¾" (1.79 m)	6'-1¾" (1,89 m)	4½ (110)	1 (30)	35°	2.9 (2.2)	36 (827)	36 (1.05 m)	7'-10" (2.46 m)	14'-3" (4.33 m)	3'-5" (1.05 m)	5'-1" (1.55 m)	50	170 (77)
	DS 24-1½ (DS 600-1½)	24 (600)	34 (870)	16 (410)	39 (990)	4'-4¼" (1.329 m)	14'-10½" (4.55 m)	9'-5" (2.9 m)	35¾ (910)	30 (762)	7'-3¼" (2.23 m)	7'-7¼" (2.32 m)	4½ (110)	1 (30)	35°	4.2 (3.2)	3'-6" (978)	4'-7" (1.4 m)	9'-5" (2.94 m)	17'-6" (5.32 m)	4'-7" (1.4 m)	6'-3" (1.91 m)	62	260 (117)
	DS 30-1½ (DS 750-1½)	30 (750)	39 (990)	19 (480)	3'-9" (1140)	5'-2¾" (1.594 m)	17'-2¼" (5.24 m)	10'-9¾" (3.3 m)	3'-5" (1.04 m)	36 (914)	8'-5¼" (2.57 m)	8'-9" (2.67 m)	4½ (110)	1 (30)	35°	5.4 (4.1)	4'-1" (1.1 m)	5'-6" (1.66 m)	10'-11" (3.33 m)	20'-6" (6.1 m)	5'-6" (1.66 m)	7'-2" (2.19 m)	74	350 (158)
	DS 36-1½ (DS 900-1½)	36 (900)	3'-9" (1140)	22 (560)	4'-4" (1320)	6'-4¾" (1.951 m)	20'-1¼" (6.12 m)	12'-5¾" (3.79 m)	3'-11¼" (1.2 m)	3'-8" (1.119 m)	9'-10¾" (3.01 m)	10'-2½" (3.11 m)	4½ (110)	1 (30)	35°	7.1 (5.4)	4'-9" (1.26 m)	6'-7" (2.02 m)	12'-8" (3.84 m)	24'-0" (7.12 m)	6'-7" (2.02 m)	8'-3" (2.52 m)	86	212 (470)
60°	DS 15-1½ (DS 375-1½)	15 (375)	28 (720)	10 (260)	29 (740)	38 (966)	13'-1¼" (4.03 m)	9'-0¼" (2.78 m)	29 (750)	19 (483)	6'-4½" (1.96 m)	6'-8¾" (2.07 m)	4½ (120)	0¾ (20)	30°	2.9 (2.2)	34 (802)	3'-5" (1.04 m)	9'-0" (2.78 m)	15'-3" (4.62 m)	3'-5" (1.04 m)	5'-1" (1.55 m)	54	170 (77)
	DS 18-1½ (DS 450-1½)	18 (450)	28 (720)	13 (330)	32 (810)	3'-8" (1.118 m)	13'-7¼" (4.18 m)	9'-0¼" (2.78 m)	29 (750)	22 (559)	6'-7½" (2.04 m)	6'-11¾" (2.14 m)	4½ (120)	0¾ (20)	30°	3.2 (2.5)	34 (820)	3'-11" (1.19 m)	9'-0" (2.85 m)	15'-0" (4.86 m)	3'-11" (1.19 m)	5'-7" (1.70 m)	58	200 (90)
	DS 24-1½ (DS 600-1½)	24 (600)	34 (870)	16 (410)	39 (990)	5'-0" (1.524 m)	16'-11¼" (5.19 m)	10'-11¼" (3.36 m)	35¼ (900)	30 (762)	8'-3½" (2.04 m)	8'-7¾" (2.65 m)	4½ (120)	0¾ (20)	30°	4.7 (3.6)	3'-6" (969)	5'-3" (1.6 m)	11'-0" (3.41 m)	19'-9" (5.98 m)	5'-3" (1.6 m)	6'-11" (2.11 m)	72	300 (135)
	DS 30-1½ (DS 750-1½)	30 (750)	39 (990)	19 (480)	3'-9" (1140)	6'-0" (1.828 m)	19'-7¼" (5.97 m)	12'-6¾" (3.83 m)	3'-4½" (1.03 m)	36 (914)	9'-7½" (2.93 m)	9'-11¾" (3.04 m)	4½ (120)	0¾ (20)	30°	6.1 (4.7)	4'-1" (1.09 m)	6'-3" (1.9 m)	12'-8" (3.87 m)	23'-0" (6.86 m)	6'-3" (1.9 m)	7'-11" (2.41 m)	82	390 (176)
	DS 36-1½ (DS 900-1½)	36 (900)	3'-9" (1140)	22 (560)	4'-4" (1320)	7'-4" (2.238 m)	22'-11¼" (6.98 m)	14'-5¾" (4.41 m)	3'-10½" (1.18 m)	3'-8" (1.119 m)	11'-3½" (3.44 m)	11'-7¾" (3.54 m)	4½ (119)	0¾ (20)	30°	8.1 (6.2)	4'-7" (1.25 m)	7'-7" (2.31 m)	14'-7" (4.46 m)	26'-9" (8.02 m)	7'-7" (2.31 m)	9'-3" (2.82 m)	98	530 (239)

Illinois Department of Transportation

APPROVED January 1, 2009
Ralph E. Anderson
ENGINEER OF BRIDGES AND STRUCTURES

APPROVED January 1, 2009
Eric E. Harm
ENGINEER OF DESIGN AND ENVIRONMENT

ISSUED 1-1-97

REINFORCED CONCRETE END SECTIONS
FOR PIPE CULVERTS
15" (375 mm) THRU 36" (900 mm) DIA.
SKEWED WITH ROADWAY
(Sheet 3 of 5)

STANDARD 542201-02

WINGS FOR 1:2 SLOPE

Skew Angle	Design No.	Nominal Pipe Dia.	DIMENSIONS FOR CONCRETE A	B	C	D	E	F	G	H	J	K	M	N	α	Concrete 2 End Sections yd³ (m³)	Reinf. Bars - 2 End Sections h - bars o	p	q	Lgth.	h_1 - bars P	Lgth.	v-bars No.	Bars for 2 End Sections lbs. (kg)
5°	DS 15-2 (DS 375-2)	15 (375)	38 (960)	10 (260)	29 (740)	19 (485)	8'-7¾" (2.63 m)	4'-8¼" (1.42 m)	4'-3½" (1.31 m)	19 (483)	4'-3¾" (1.31 m)	4'-4" (1.32 m)	2¾ (70)	2¼ (60)	85°	1.9 (1.5)	4'-7" (1.33 m)	21 (551)	4'-11" (1.45 m)	11'-3" (3.33 m)	551 (551)	3'-5" (1.04 m)	34	110 (50)
	DS 18-2 (DS 450-2)	18 (450)	38 (960)	13 (330)	32 (810)	22 (561)	8'-10¾" (2.7 m)	4'-8¼" (1.42 m)	4'-3½" (1.31 m)	22 (559)	4'-5¼" (1.35 m)	4'-5½" (1.35 m)	2¾ (70)	2¼ (60)	85°	2.0 (1.5)	4'-7" (1.36 m)	24 (626)	4'-11" (1.48 m)	11'-6" (4.47 m)	24 (626)	3'-8" (1.12 m)	34	120 (54)
	DS 24-2 (DS 600-2)	24 (600)	3'-10" (1.16 m)	16 (410)	39 (990)	30 (765)	10'-11" (3.31 m)	5'-8" (1.72 m)	5'-2½" (1.58 m)	30 (762)	5'-5¼" (1.65 m)	5'-5¾" (1.66 m)	2¾ (70)	2¼ (60)	85°	2.9 (2.2)	5'-5" (1.62 m)	32 (832)	5'-11" (1.77 m)	14'-0" (4.22 m)	32 (832)	4'-4" (1.32 m)	42	180 (81)
	DS 30-2 (DS 750-2)	30 (750)	4'-4" (1.32 m)	19 (480)	3'-9" (1.14 m)	36 (917)	12'-5" (3.78 m)	6'-5" (1.96 m)	5'-10½" (1.79 m)	36 (914)	6'-2¼" (1.89 m)	6'-2¾" (1.89 m)	2¾ (70)	2¼ (60)	85°	3.7 (2.8)	6'-3" (1.84 m)	39 (983)	6'-9" (2.0 m)	16'-3" (4.83 m)	39 (983)	4'-11" (1.50 m)	48	230 (104)
	DS 36-2 (DS 900-2)	36 (900)	5'-0" (1.52 m)	22 (560)	4'-4" (1.32 m)	3'-8¼" (1.123 m)	14'-5" (4.39 m)	7'-4¾" (2.25 m)	6'-9¼" (2.07 m)	3'-8" (1.119 m)	7'-2¼" (2.19 m)	7'-2¾" (2.2 m)	2¾ (70)	2¼ (60)	85°	4.5 (3.4)	7'-2" (2.12 m)	3'-11" (1.19 m)	7'-8" (2.3 m)	18'-9" (5.6 m)	3'-11" (1.19 m)	5'-7" (1.70 m)	54	300 (135)
10°	DS 15-2 (DS 375-2)	15 (375)	38 (960)	10 (260)	29 (740)	19¼ (490)	8'-9" (2.65 m)	4'-11" 1.5 m)	4'-1½" (1.26 m)	19 (483)	4'-4" (1.32 m)	4'-5" (1.33 m)	2¾ (70)	2¼ (60)	80°	2.0 (1.5)	4'-4" (1.28 m)	22 (557)	5'-1" (1.52 m)	22'-3" (3.36 m)	22 (557)	3'-6" (1.07 m)	34	110 (50)
	DS 18-2 (DS 450-2)	18 (450)	38 (960)	13 (330)	32 (810)	22¼ (568)	9'-0" (2.73 m)	4'-11" (1.5 m)	4'-1½" (1.26 m)	22 (559)	4'-5¾" (1.36 m)	4'-6¼" (1.37 m)	2¾ (70)	2¼ (60)	80°	2.1 (1.6)	4'-4" (1.32 m)	25 (633)	5'-1" (1.55 m)	11'-6" (3.5 m)	25 (633)	3'-9" (1.14 m)	34	120 (54)
	DS 24-2 (DS 600-2)	24 (600)	3'-10" (1.16 m)	16 (410)	39 (990)	30½ (774)	11'-0¼" (3.34 m)	5'-11½" (1.81 m)	5'-0" (1.52 m)	30 (762)	5'-5¾" (1.66 m)	5'-6½" (1.68 m)	2¾ (70)	2¼ (60)	80°	3.0 (2.3)	5'-4" (1.57 m)	33 (841)	6'-2" (1.85 m)	14'-3" (4.26 m)	33 (841)	4'-5" (1.35 m)	42	180 (81)
	DS 30-2 (DS 750-2)	30 (750)	4'-4" (1.32 m)	19 (480)	3'-9" (1.14 m)	36½ (928)	12'-6¾" (3.82 m)	6'-9" (2.06 m)	5'-8" (1.73 m)	36 (914)	6'-3" (1.9 m)	6'-3¾" (1.92 m)	2¾ (70)	2¼ (60)	80°	3.8 (2.9)	6'-0" (1.78 m)	39 (993)	7'-0" (2.1 m)	16'-3" (4.87 m)	39 (993)	4'-11" (1.50 m)	48	230 (104)
	DS 36-2 (DS 900-2)	36 (900)	5'-0" (1.52 m)	22 (560)	4'-4" (1.32 m)	3'-8¾" (1.136 m)	14'-7" (4.44 m)	7'-9¼" (2.37 m)	6'-6¼" (1.99 m)	3'-8" (1.119 m)	7'-3" (2.21 m)	7'-4" (2.23 m)	2¾ (70)	2¼ (60)	80°	4.7 (3.6)	7'-0" (2.04 m)	3'-11" (1.2 m)	8'-1" (2.42 m)	19'-0" (5.66 m)	3'-11" (1.2 m)	5'-7" (1.70 m)	54	300 (135)
15°	DS 15-2 (DS 375-2)	15 (375)	38 (960)	10 (260)	29 (740)	19¾ (500)	8'-10¾" (2.7 m)	5'-2½" (1.58 m)	4'-0" (1.21 m)	19 (483)	4'-4¾" (1.34 m)	4'-6" (1.36 m)	3 (80)	2 (50)	75°	2.0 (1.5)	4'-3" (1.24 m)	22 (567)	5'-5" (1.6 m)	11'-6" (3.41 m)	22 (567)	3'-6" (1.07 m)	34	110 (50)
	DS 18-2 (DS 450-2)	18 (450)	38 (960)	13 (330)	32 (810)	22¾ (579)	9'-2" (2.78 m)	5'-2½" (1.58 m)	4'-0" (1.21 m)	22 (559)	4'-6½" (1.38 m)	4'-7½" (1.4 m)	3 (80)	2 (50)	75°	2.2 (1.7)	4'-3" (1.27 m)	25 (644)	5'-5" (1.64 m)	11'-9" (3.55 m)	25 (644)	3'-9" (1.14 m)	34	120 (54)
	DS 24-2 (DS 600-2)	24 (600)	3'-10" (1.16 m)	16 (410)	39 (990)	31 (789)	11'-2¾" (3.4 m)	6'-3½" (1.91 m)	4'-10" (1.47 m)	30 (762)	5'-6¾" (1.69 m)	5'-8" (1.72 m)	3 (80)	2 (50)	75°	3.1 (2.4)	5'-2" (1.52 m)	34 (857)	6'-6" (1.95 m)	14'-6" (4.32 m)	34 (857)	4'-6" (1.37 m)	42	180 (81)
	DS 30-2 (DS 750-2)	30 (750)	4'-4" (1.32 m)	19 (480)	3'-9" (1.14 m)	37¼ (946)	12'-9¼" (3.89 m)	7'-1½" (2.17 m)	5'-5½" (1.67 m)	36 (914)	6'-4" (1.93 m)	6'-5¼" (1.96 m)	3 (80)	2 (50)	75°	3.9 (3.0)	5'-10" (1.72 m)	3'-4" (1.01 m)	7'-4" (2.21 m)	16'-6" (4.94 m)	3'-4" (1.01 m)	5'-0" (1.52 m)	52	250 (113)
	DS 36-2 (DS 900-2)	36 (900)	5'-0" (1.52 m)	22 (560)	4'-4" (1.32 m)	3'-9½ (1.158)	14'-10¼" (4.52 m)	8'-2½" (2.5 m)	6'-3½" (1.92 m)	3'-8" (1.119 m)	7'-4½" (2.25 m)	7'-5¾" (2.27 m)	3 (80)	2 (50)	75°	5.0 (3.8)	6'-9" (1.97 m)	4'-0" (1.22 m)	8'-6" (2.55 m)	19'-3" (5.74 m)	4'-0" (1.22 m)	5'-8" (1.73 m)	56	310 (140)
20°	DS 15-2 (DS 375-2)	15 (375)	38 (960)	10 (260)	29 (740)	20¼ (514)	9'-1½" (2.77 m)	5'-6¼" (1.68 m)	3'-10½" (1.18 m)	19 (483)	4'-6" (1.37 m)	4'-7½" (1.4 m)	3 (80)	2 (50)	70°	2.1 (1.6)	4'-2" (1.21 m)	23 (581)	5'-8" (1.69 m)	11'-9" (3.48 m)	23 (581)	3'-7" (1.09 m)	36	110 (50)
	DS 18-2 (DS 450-2)	18 (450)	38 (960)	13 (330)	32 (810)	23½ (595)	9'-4½" (2.85 m)	5'-6¼" (1.68 m)	3'-10½" (1.18 m)	22 (559)	4'-7½" (1.41 m)	4'-9" (1.44 m)	3 (80)	2 (50)	70°	2.3 (1.8)	4'-2" (1.24 m)	26 (661)	5'-8" (1.73 m)	12'-0" (3.63 m)	26 (661)	3'-10" (1.17 m)	36	130 (59)
	DS 24-2 (DS 600-2)	24 (600)	3'-10" (1.16 m)	16 (410)	39 (990)	32 (811)	11'-6¼" (3.49 m)	6'-8¼" (2.03 m)	4'-8¼" (1.42 m)	30 (762)	5'-8½" (1.73 m)	5'-9¾" (1.76 m)	3 (80)	2 (50)	70°	3.2 (2.4)	5'-0" (1.47 m)	35 (879)	6'-10" (2.07 m)	14'-9" (4.42 m)	35 (879)	4'-7" (1.40 m)	48	200 (90)
	DS 30-2 (DS 750-2)	30 (750)	4'-4" (1.32 m)	19 (480)	3'-9" (1.14 m)	38¼ (973)	13'-1¼" (3.99 m)	7'-6¾" (2.3 m)	5'-3½" (1.61 m)	36 (914)	6'-6" (1.98 m)	6'-7¼" (2.01 m)	3 (80)	2 (50)	70°	4.1 (3.1)	5'-9" (1.67 m)	3'-5" (1.04 m)	7'-10" (2.35 m)	17'-0" (5.05 m)	3'-5" (1.04 m)	5'-1" (1.55 m)	52	250 (113)
	DS 36-2 (DS 900-2)	36 (900)	5'-0" (1.52 m)	22 (560)	4'-4" (1.32 m)	3'-10¾" (1.191 m)	15'-3" (4.64 m)	8'-8½" (2.65 m)	6'-1¼" (1.86 m)	3'-8" (1.119 m)	7'-6¾" (2.3 m)	7'-8¼" (2.34 m)	3 (80)	2 (50)	70°	5.3 (4.1)	6'-6" (1.91 m)	4'-1" (1.26 m)	8'-11" (2.7 m)	19'-6" (5.87 m)	4'-1" (1.26 m)	5'-9" (1.75 m)	58	320 (144)
25°	DS 15-2 (DS 375-2)	15 (375)	38 (960)	10 (260)	29 (740)	21 (533)	9'-5" (2.86 m)	5'-10¾" (1.79 m)	3'-9" (1.14 m)	19 (483)	4'-7½" (1.41 m)	4'-9½" (1.45 m)	3¼ (90)	1¾ (50)	65°	2.2 (1.7)	4'-1" (1.12 m)	23 (600)	6'-0" (1.8 m)	12'-0" (3.58 m)	23 (600)	3'-7" (1.09 m)	38	120 (54)
	DS 18-2 (DS 450-2)	18 (450)	38 (960)	13 (330)	32 (810)	24¼ (617)	9'-8½" (2.95 m)	5'-10¾" (1.79 m)	3'-9" (1.14 m)	22 (559)	4'-9¼" (1.45 m)	4'-11¼" (1.5 m)	3¼ (90)	1¾ (50)	65°	2.4 (1.8)	4'-0" (1.2 m)	27 (683)	6'-0" (1.85 m)	12'-3" (3.73 m)	27 (683)	3'-11" (1.19 m)	42	140 (63)
	DS 24-2 (DS 600-2)	24 (600)	3'-10" (1.16 m)	16 (410)	39 (990)	33 (841)	11'-11" (3.61 m)	7'-1½" (2.16 m)	4'-6½" (1.38 m)	30 (762)	5'-10½" (1.78 m)	6'-0½" (1.83 m)	3¼ (90)	1¾ (50)	65°	3.4 (2.6)	4'-11" (1.43 m)	35 (909)	7'-4" (2.2 m)	15'-3" (4.55 m)	35 (909)	4'-7" (1.40 m)	48	200 (90)
	DS 30-2 (DS 750-2)	30 (750)	4'-4" (1.32 m)	19 (480)	3'-9" (1.14 m)	3'-3¼" (1.008 m)	13'-6¾" (4.13 m)	8'-0¾" (2.46 m)	5'-1¾" (1.57 m)	36 (914)	6'-8½" (2.04 m)	6'-10¼" (2.09 m)	3¼ (90)	1¾ (50)	65°	4.3 (3.3)	5'-6" (1.62 m)	3'-6" (1.08 m)	8'-3" (2.5 m)	17'-3" (5.2 m)	3'-6" (1.08 m)	5'-2" (1.58 m)	52	250 (113)
	DS 36-2 (DS 900-2)	36 (900)	5'-0" (1.52 m)	22 (560)	4'-4" (1.32 m)	4'-0½" (1.235 m)	15'-9¼" (4.8 m)	9'-3¾" (2.83 m)	5'-11¼" (1.81 m)	3'-8" (1.119 m)	7'-9¾" (2.38 m)	7'-11½" (2.42 m)	3¼ (90)	1¾ (50)	65°	5.6 (4.3)	6'-5" (1.86 m)	4'-3" (1.3 m)	9'-7" (2.88 m)	20'-3" (6.04 m)	4'-3" (1.3 m)	5'-11" (1.80 m)	60	330 (149)
30°	DS 15-2 (DS 375-2)	15 (375)	38 (960)	10 (260)	29 (740)	22 (558)	9'-9¾" (2.98 m)	6'-4" (1.92 m)	3'-8" (1.11 m)	19 (483)	4'-9¾" (1.46 m)	5'-0" (1.52 m)	3½ (90)	1½ (40)	60°	2.3 (1.8)	4'-0" (1.15 m)	24 (626)	6'-6" (1.93 m)	12'-6" (3.71 m)	24 (626)	3'-8" (1.12 m)	42	130 (59)
	DS 18-2 (DS 450-2)	18 (450)	38 (960)	13 (330)	32 (810)	25½ (645)	10'-1½" (3.07 m)	6'-4" (1.92 m)	3'-8" (1.11 m)	22 (559)	4'-11½" (1.51 m)	5'-2" (1.56 m)	3½ (90)	1½ (40)	60°	2.5 (1.9)	4'-0" (1.18 m)	28 (712)	6'-5" (1.98 m)	3.87 m (12'-9")	28 (712)	4'-0" (1.22 m)	42	150 (68)
	DS 24-2 (DS 600-2)	24 (600)	3'-10" (1.16 m)	16 (410)	39 (990)	34¾ (880)	12'-5" (3.77 m)	7'-8" (2.32 m)	4'-5" (1.34 m)	30 (762)	6'-1½" (1.86 m)	6'-3½" (1.91 m)	3½ (90)	1½ (40)	60°	3.6 (2.8)	4'-10" (1.4 m)	37 (949)	7'-10" (2.37 m)	4.71 m (15'-9")	37 (949)	4'-9" (1.45 m)	52	210 (95)
	DS 30-2 (DS 750-2)	30 (750)	4'-4" (1.32 m)	19 (480)	3'-9" (1.14 m)	3'-5½" (1.055 m)	14'-1¾" (4.31 m)	8'-8" (2.64 m)	5'-0" (1.53 m)	36 (914)	6'-11¾" (2.13 m)	7'-2" (2.18 m)	3½ (90)	1½ (40)	60°	4.5 (3.4)	5'-6" (1.58 m)	3'-8" (1.12 m)	8'-10" (2.69 m)	5.39 m (18'-0")	3'-8" (1.12 m)	5'-4" (1.63 m)	56	270 (122)
	DS 36-2 (DS 900-2)	36 (900)	5'-0" (1.52 m)	22 (560)	4'-4" (1.32 m)	4'-2¾" (1.292 m)	16'-5½" (5.01 m)	10'-0" (3.04 m)	5'-9¼" (1.76 m)	3'-8" (1.119 m)	8'1¾" (2.48 m)	8'-3¾" (2.53 m)	3½ (90)	1½ (40)	60°	5.9 (4.5)	6'-4" (1.82 m)	4'-5" (1.36 m)	10'-3" (3.09 m)	6.26 m (21'-0")	4'-5" (1.36 m)	6'-1" (1.86 m)	66	360 (162)

Illinois Department of Transportation

APPROVED January 1, 2009
Ralph E. Anderson
ENGINEER OF BRIDGES AND STRUCTURES

APPROVED January 1, 2009
Eric E. Harm
ENGINEER OF DESIGN AND ENVIRONMENT

ISSUED 1-1-97

REINFORCED CONCRETE END SECTIONS
FOR PIPE CULVERTS
15" (375 mm) THRU 36" (900 mm) DIA.
SKEWED WITH ROADWAY
(Sheet 4 of 5)

STANDARD 542201-02

WINGS FOR 1:2 SLOPE

Skew Angle	Design No.	Nominal Pipe Dia.	DIMENSIONS FOR CONCRETE A	B	C	D	E	F	G	H	J	K	M	N	α	Concrete 2 End Sections yd³ (m³)	Reinf. Bars - 2 End Sections h - bars o	p	q	Lgth.	h₁ - bars p	Lgth.	v-bars No.	Bars for 2 End Sections lbs. (kg)
35°	DS 15-2 (DS 375-2)	15 (375)	38 (960)	10 (260)	29 (740)	23¼ (590)	10'-4" (3.14 m)	6'-10¼" (2.08 m)	3'-6¾" (1.08 m)	19 (485)	5'-0¾" (1.54 m)	5'-3¼" (1.6 m)	3¾ (90)	1½ (40)	55°	2.4 (1.8)	3'-11" (1.13 m)	26 (658)	6'-11" (2.09 m)	13'-0" (3.87 m)	26 (658)	3'-10" (1.17 m)	44	140 (63)
	DS 18-2 (DS 450-2)	18 (450)	38 (960)	13 (330)	32 (810)	27 (683)	10'-7¾" (3.23 m)	6'-10¼" (2.08 m)	3'-6¾" (1.09 m)	22 (559)	5'-2½" (1.58 m)	5'-5¼" (1.65 m)	3¾ (90)	1½ (40)	55°	2.6 (2.0)	3'-11" (1.15 m)	29 (750)	6'-11" (2.14 m)	13'-3" (4.04 m)	29 (750)	4'-1" (1.25 m)	44	150 (68)
	DS 24-2 (DS 600-2)	24 (600)	3'-10" (1.16 m)	16 (410)	39 (990)	36½ (930)	13'-1" (3.97 m)	8'-3½" (2.52 m)	4'-3¾" (1.31 m)	30 (762)	6'-5¼" (1.95 m)	6'-7¾" (2.02 m)	3¾ (90)	1½ (40)	55°	3.8 (2.9)	4'-8" (1.37 m)	39 (1.0 m)	8'-4" (2.56 m)	16'-3" (4.93 m)	39 (1.0 m)	4'-11" (1.50 m)	52	220 (99)
	DS 30-2 (DS 750-2)	30 (750)	4'-4" (1.32 m)	19 (480)	3'-9" (1.14 m)	3'-8" (1.116 m)	14'-11" (4.54 m)	9'-4½" (2.86 m)	4'-10½" (1.49 m)	36 (914)	7'-4¼" (2.24 m)	7'-6¾" (2.3 m)	3¾ (90)	1½ (40)	55°	4.8 (3.7)	5'-4" (1.55 m)	3'-11" (1.18 m)	9'-6" (2.9 m)	18'-9" (5.64 m)	3'-11" (1.18 m)	5'-7" (1.70 m)	60	290 (131)
	DS 36-2 (DS 900-2)	36 (900)	5'-0" (1.52 m)	22 (560)	4'-4" (1.32 m)	4'-5¾" (1.366 m)	17'-4¼" (5.28 m)	10'-10" (3.29 m)	5'-7¾" (1.72 m)	3'-8" (1.119 m)	8'-6¾" (2.61 m)	8'-9½" (2.67 m)	3¾ (90)	1½ (40)	55°	6.3 (4.8)	6'-1" (1.78 m)	4'-8" (1.43 m)	11'-0" (3.34 m)	21'-9" (6.55 m)	4'-8" (1.43 m)	6'-4" (1.93 m)	70	380 (171)
40°	DS 15-2 (DS 375-2)	15 (375)	38 (960)	10 (260)	29 (740)	34¾ (631)	11'-0" (3.34 m)	7'-6" (2.27 m)	3'-6" (1.06 m)	19 (485)	5'-4½" (1.63 m)	5'-7½" (1.71 m)	3¾ (100)	1¼ (40)	50°	2.6 (2.0)	3'-10" (1.1 m)	28 (700)	7'-7" (2.28 m)	13'-9" (4.08 m)	28 (700)	3'-11" (1.19 m)	48	150 (68)
	DS 18-2 (DS 450-2)	18 (450)	38 (960)	13 (330)	32 (810)	28¾ (730)	11'-4" (3.44 m)	7'-6" (2.27 m)	3'-6" (1.08 m)	22 (559)	5'-6½" (1.68 m)	5'-9½" (1.76 m)	3¾ (100)	1¼ (40)	50°	2.8 (2.1)	3'-10" (1.13 m)	31 (798)	7'-7" (2.34 m)	14'-0" (4.26 m)	31 (798)	4'-3" (1.30 m)	48	160 (72)
	DS 24-2 (DS 600-2)	24 (600)	3'-10" (1.16 m)	16 (410)	39 (990)	3'-3¼" (995)	13'-11¼" (4.23 m)	9'-0¾" (2.75 m)	4'-2¾" (1.28 m)	30 (762)	6'-10¼" (2.08 m)	7'-1" (2.15 m)	3¾ (100)	1¼ (40)	50°	4.1 (3.1)	4'-7" (1.34 m)	3'-6" (1.07 m)	9'-2" (2.79 m)	17'-3" (5.2 m)	3'-6" (1.07 m)	5'-2" (1.58 m)	58	240 (108)
	DS 30-2 (DS 750-2)	30 (750)	4'-4" (1.32 m)	19 (480)	3'-9" (1.14 m)	3'-11" (1.193 m)	15'-10¾" (4.84 m)	10'-3" (3.12 m)	4'-9½" (1.46 m)	36 (914)	7'-10" (2.38 m)	8'-0¾" (2.46 m)	3¾ (100)	1¼ (40)	50°	5.2 (4.0)	5'-3" (1.52 m)	4'-2" (1.26 m)	10'-4" (3.17 m)	19'-9" (5.95 m)	4'-2" (1.26 m)	5'-10" (1.78 m)	64	310 (140)
	DS 36-2 (DS 900-2)	36 (900)	5'-0" (1.52 m)	22 (560)	4'-4" (1.32 m)	4'-9½" (1.461 m)	18'-6" (5.63 m)	11'-10" (3.6 m)	5'-6¼" (1.68 m)	3'-8" (1.119 m)	9'-1½" (2.78 m)	9'-4½" (2.85 m)	3¾ (100)	1¼ (40)	50°	6.8 (5.2)	6'-0" (1.74 m)	5'-0" (1.53 m)	12'-0" (3.65 m)	23'-0" (6.92 m)	5'-0" (1.53 m)	6'-3" (2.03 m)	78	420 (189)
45°	DS 15-2 (DS 375-2)	15 (375)	38 (960)	10 (260)	29 (740)	27 (683)	11'-10¼" (3.6 m)	8'-3¼" (2.51 m)	3'-5¼" (1.04 m)	19 (485)	5'-9½" (1.76 m)	6'-0¾" (1.84 m)	4 (100)	1¼ (30)	45°	2.8 (2.1)	3'-9" (1.09 m)	29 (753)	8'-4" (2.51 m)	14'-6" (4.35 m)	29 (753)	4'-1" (1.25 m)	48	150 (68)
	DS 18-2 (DS 450-2)	18 (450)	38 (960)	13 (330)	32 (810)	31 (791)	12'-2½" (3.7 m)	8'-3¼" (2.51 m)	3'-5¼" (1.04 m)	22 (559)	5'-11½" (1.81 m)	6'-3" (1.89 m)	4 (100)	1¼ (30)	45°	3.1 (2.4)	3'-10" (1.11 m)	34 (859)	8'-4" (2.58 m)	15'-0" (4.55 m)	34 (859)	4'-6" (1.37 m)	52	180 (81)
	DS 24-2 (DS 600-2)	24 (600)	3'-10" (1.16 m)	16 (410)	39 (990)	3'-6½" (1.078 m)	15'-0¼" (4.56 m)	10'-0¼" (3.03 m)	4'-1¾" (1.26 m)	30 (762)	7'-4½" (2.24 m)	7'-7¾" (2.32 m)	4 (100)	1¼ (30)	45°	4.4 (3.4)	4'-6" (1.32 m)	3'-9" (1.15 m)	10'-0" (3.08 m)	18'-3" (5.55 m)	3'-9" (1.15 m)	5'-5" (1.65 m)	60	250 (113)
	DS 30-2 (DS 750-2)	30 (750)	4'-4" (1.32 m)	19 (480)	3'-9" (1.14 m)	4'-3" (1.293 m)	17'-1¾" (5.23 m)	11'-4" (3.45 m)	4'-8¼" (1.43 m)	36 (914)	8'-5¼" (2.57 m)	8'-8½" (2.66 m)	4 (100)	1¼ (30)	45°	5.6 (4.3)	5'-2" (1.49 m)	4'-5" (1.36 m)	11'-5" (3.5 m)	21'-0" (6.35 m)	4'-5" (1.36 m)	6'-1" (1.86 m)	72	340 (153)
	DS 36-2 (DS 900-2)	36 (900)	5'-0" (1.52 m)	22 (560)	4'-4" (1.32 m)	5'-2¼" (1.583 m)	19'-11¾" (6.08 m)	13'-0¾" (3.97 m)	5'-5" (1.65 m)	3'-8" (1.119 m)	9'-10¼" (3.0 m)	10'-1½" (3.08 m)	4 (100)	1¼ (30)	45°	7.4 (5.7)	5'-11" (1.71 m)	5'-5" (1.65 m)	13'-2" (4.02 m)	24'-6" (7.39 m)	5'-5" (1.65 m)	7'-1" (2.16 m)	82	450 (203)
50°	DS 15-2 (DS 375-2)	15 (375)	38 (960)	10 (260)	29 (740)	29½ (751)	12'-11½" (3.93 m)	9'-3" (2.81 m)	3'-4½" (1.03 m)	19 (485)	6'-4" (1.92 m)	6'-7½" (2.01 m)	4¼ (110)	1 (30)	40°	3.1 (2.4)	3'-9" (1.07 m)	32 (822)	9'-4" (2.81 m)	15'-9" (4.7 m)	32 (822)	4'-4" (1.32 m)	54	170 (77)
	DS 18-2 (DS 450-2)	18 (450)	38 (960)	13 (330)	32 (810)	34¼ (870)	13'-4¼" (4.05 m)	9'-3" (2.81 m)	3'-4½" (1.03 m)	22 (559)	6'-6¼" (1.98 m)	6'-10" (2.07 m)	4¼ (110)	1 (30)	40°	3.4 (2.6)	3'-8" (1.1 m)	37 (939)	9'-3" (2.88 m)	16'-0" (4.92 m)	37 (939)	4'-9" (1.45 m)	54	190 (86)
	DS 24-2 (DS 600-2)	24 (600)	3'-10" (1.16 m)	16 (410)	39 (990)	3'-10¾" (1.185 m)	16'-5½" (4.99 m)	11'-2½" (3.39 m)	4'-1" (1.24 m)	30 (762)	8'-1" (2.45 m)	8'-4½" (2.54 m)	4¼ (110)	1 (30)	40°	4.8 (3.7)	4'-6" (1.3 m)	4'-1" (1.26 m)	11'-2" (3.44 m)	19'-9" (6.0 m)	4'-1" (1.26 m)	5'-9" (1.75 m)	68	280 (126)
	DS 30-2 (DS 750-2)	30 (750)	4'-4" (1.32 m)	19 (480)	3'-9" (1.14 m)	4'-8" (1.422 m)	18'-9½" (5.72 m)	12'-8" (3.86 m)	4'-7¼" (1.41 m)	36 (914)	9'-3" (2.82 m)	9'-6½" (2.92 m)	4¼ (110)	1 (30)	40°	6.2 (4.7)	5'-1" (1.47 m)	4'-10" (1.49 m)	12'-9" (3.91 m)	22'-9" (6.87 m)	4'-10" (1.49 m)	6'-6" (1.98 m)	78	370 (167)
	DS 36-2 (DS 900-2)	36 (900)	5'-0" (1.52 m)	22 (560)	4'-4" (1.32 m)	5'-8½" (1.741 m)	21'-10¾" (6.67 m)	14'-7½" (4.45 m)	5'-3¾" (1.62 m)	3'-8" (1.119 m)	10'-9½" (3.29 m)	11'-1¼" (3.38 m)	4¼ (110)	1 (30)	40°	8.1 (6.2)	5'-10" (1.69 m)	5'-11" (1.81 m)	14'-9" (4.5 m)	26'-6" (8.0 m)	5'-11" (1.81 m)	7'-7" (2.31 m)	90	490 (221)
55°	DS 15-2 (DS 375-2)	15 (375)	38 (960)	10 (260)	29 (740)	33 (842)	14'-5" (4.38 m)	10'-6¼" (3.2 m)	3'-4" (1.01 m)	19 (485)	7'-0½" (2.14 m)	7'-4½" (2.24 m)	4½ (110)	1 (30)	35°	3.4 (2.6)	3'-8" (1.06 m)	36 (914)	10'-7" (3.18 m)	17'-3" (5.17 m)	36 (914)	4'-8" (1.42 m)	60	180 (81)
	DS 18-2 (DS 450-2)	18 (450)	38 (960)	13 (330)	32 (810)	38¼ (975)	14'-10¼" (14'-10¼")	10'-6¼" (3.2 m)	3'-4" (1.01 m)	22 (559)	7'-3¼" (2.21 m)	7'-7" (2.3 m)	4½ (110)	1 (30)	35°	3.7 (2.8)	3'-9" (1.08 m)	3'-5" (1.05 m)	10'-7" (3.27 m)	17'-9" (5.4 m)	3'-5" (1.05 m)	5'-1" (1.55 m)	60	210 (95)
	DS 24-2 (DS 600-2)	24 (600)	3'-10" (1.16 m)	16 (410)	39 (990)	4'-4¼" (1.329 m)	14'-10¼" (5.56 m)	12'-9" (3.86 m)	4'-0¼" (1.22 m)	30 (762)	9'-0¼" (2.73 m)	9'-4" (2.83 m)	4½ (110)	1 (30)	35°	5.4 (4.1)	4'-5" (1.29 m)	4'-7" (1.4 m)	12'-9" (3.91 m)	21'-9" (6.6 m)	4'-7" (1.4 m)	6'-3" (1.91 m)	74	300 (135)
	DS 30-2 (DS 750-2)	30 (750)	4'-4" (1.32 m)	19 (480)	3'-9" (1.14 m)	5'-2¾" (1.594 m)	20'-11½" (6.39 m)	14'-5" (4.39 m)	4'-6½" (1.39 m)	36 (914)	10'-3¾" (3.15 m)	10'-7¾" (3.24 m)	4½ (110)	1 (30)	35°	6.9 (5.3)	5'-1" (1.45 m)	5'-6" (1.66 m)	14'-6" (4.44 m)	25'-0" (7.56 m)	5'-6" (1.66 m)	7'-2" (2.19 m)	88	420 (189)
	DS 36-2 (DS 900-2)	36 (900)	5'-0" (1.52 m)	22 (560)	4'-4" (1.32 m)	6'-4¾" (1.951 m)	24'-5¼" (7.44 m)	16'-7½" (5.06 m)	5'-3" (1.61 m)	3'-8" (1.119 m)	12'-0¾" (3.67 m)	12'-4¾" (3.77 m)	4½ (110)	1 (30)	35°	9.1 (7.0)	5'-10" (1.67 m)	6'-7" (2.02 m)	16'-7" (5.11 m)	29'-0" (8.8 m)	6'-7" (2.02 m)	8'-3" (2.52 m)	102	550 (248)
60°	DS 15-2 (DS 375-2)	15 (375)	38 (960)	10 (260)	29 (740)	38 (966)	16'-5¼" (4.99 m)	12'-2¾" (3.71 m)	3'-3¼" (1.0 m)	19 (485)	8'-0½" (2.44 m)	8'-4¾" (2.55 m)	4½ (120)	0¾ (20)	30°	3.9 (3.0)	3'-8" (1.05 m)	3'-5" (1.04 m)	12'-2" (3.7 m)	19'-3" (5.79 m)	3'-5" (1.04 m)	5'-1" (1.55 m)	64	200 (90)
	DS 18-2 (DS 450-2)	18 (450)	38 (960)	13 (330)	32 (810)	3'-8" (1.118 m)	16'-11¼" (5.15 m)	12'-2¾" (3.71 m)	3'-3¼" (1.0 m)	22 (559)	8'-3½" (2.52 m)	8'-7¾" (2.63 m)	4½ (120)	0¾ (20)	30°	4.2 (3.2)	3'-8" (1.07 m)	3'-11" (1.19 m)	12'-2" (3.8 m)	19'-9" (6.06 m)	3'-11" (1.19 m)	5'-7" (1.70 m)	70	240 (108)
	DS 24-2 (DS 600-2)	24 (600)	3'-10" (1.16 m)	16 (410)	39 (990)	5'-0" (1.524 m)	20'-11¼" (6.35 m)	14'-9¾" (4.48 m)	3'-11¾" (1.2 m)	30 (762)	10'-3½" (3.12 m)	10'-7¾" (3.23 m)	4½ (120)	0¾ (20)	30°	6.1 (4.7)	4'-5" (1.27 m)	5'-3" (1.6 m)	14'-10" (4.54 m)	24'-6" (7.41 m)	5'-3" (1.6 m)	6'-11" (2.11 m)	86	350 (158)
	DS 30-2 (DS 750-2)	30 (750)	4'-4" (1.32 m)	19 (480)	3'-9" (1.14 m)	6'-0" (1.828 m)	23'-11¼" (7.29 m)	16'-9" (5.1 m)	4'-5¾" (1.37 m)	36 (914)	11'-9½" (3.59 m)	12'-1¾" (3.7 m)	4½ (120)	0¾ (20)	30°	7.9 (6.0)	5'-0" (1.44 m)	6'-3" (1.9 m)	16'-9" (5.16 m)	28'-0" (8.5 m)	6'-3" (1.9 m)	7'-11" (2.41 m)	100	470 (212)
	DS 36-2 (DS 900-2)	36 (900)	5'-0" (1.52 m)	22 (560)	4'-4" (1.32 m)	7'-4" (2.238 m)	27'-11¼" (8.51 m)	19'-3¾" (5.88 m)	5'-2" (1.57 m)	3'-8" (1.119 m)	13'-9½" (4.2 m)	14'-1¾" (4.31 m)	4½ (120)	0¾ (20)	30°	10.4 (8.0)	5'-10" (1.65 m)	7'-7" (2.31 m)	19'-4" (5.94 m)	32'-9" (9.89 m)	7'-7" (2.31 m)	9'-3" (2.82 m)	114	620 (279)

Illinois Department of Transportation

APPROVED January 1, 2009
Ralph E. Anderson
ENGINEER OF BRIDGES AND STRUCTURES

APPROVED January 1, 2009
Eric E. Harm
ENGINEER OF DESIGN AND ENVIRONMENT

ISSUED 1-1-97

REINFORCED CONCRETE END SECTIONS
FOR PIPE CULVERTS
15" (375 mm) THRU 36" (900 mm) DIA.
SKEWED WITH ROADWAY
(Sheet 5 of 5)

STANDARD 542201-02

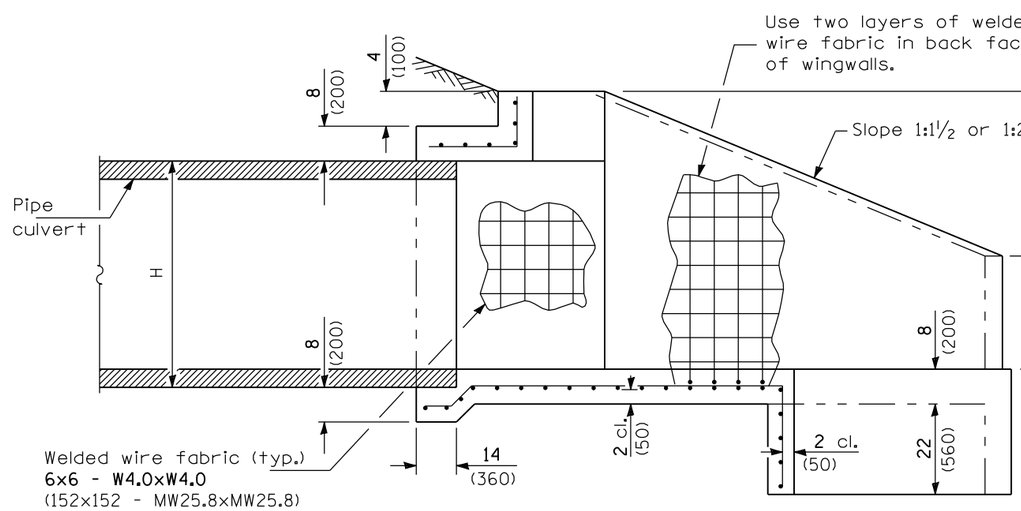

SECTION A-A

* If the embankment slope above the headwall is flatter than 1:2, provide wings for 1:2 slope.

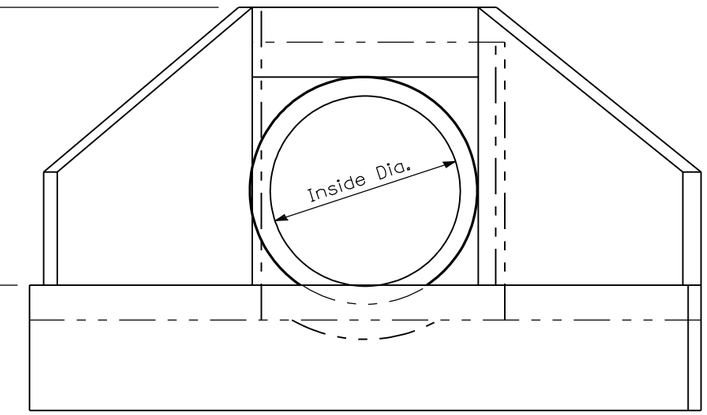

END VIEW

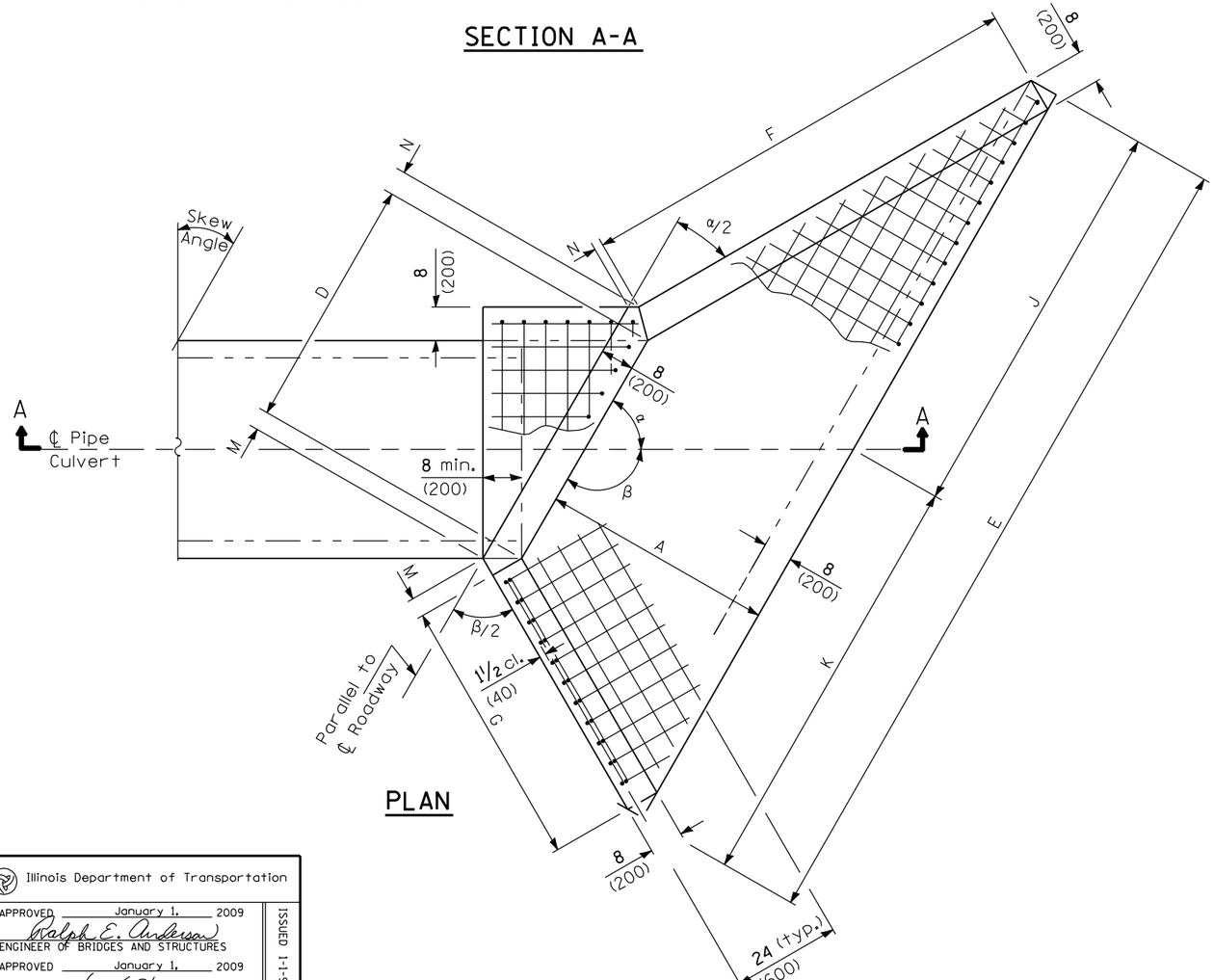

PLAN

GENERAL NOTES

Build tops of headwalls parallel to grade line.

When lapping sheets of welded wire fabric, the overlap measured between the outermost cross wires of each fabric sheet shall not be less than 8 (202).

All slope ratios are expressed as units of vertical displacement to units of horizontal displacement (V:H).

All dimensions are in inches (millimeters) unless otherwise shown.

Illinois Department of Transportation

APPROVED January 1, 2009
Ralph E. Anderson
ENGINEER OF BRIDGES AND STRUCTURES

APPROVED January 1, 2009
Eric E. Harm
ENGINEER OF DESIGN AND ENVIRONMENT

ISSUED 1-1-97

DATE	REVISIONS
1-1-09	Switched units to
	English (metric).
1-1-97	Renum. Standard 1998-2

REINFORCED CONCRETE END SECTIONS FOR PIPE CULVERTS 42" (1050 mm) THRU 60" (1500 mm) DIA. SKEWED WITH ROADWAY

(Sheet 1 of 5)

STANDARD 542206-01

WINGS FOR 1:1½ SLOPE

Skew Angle	Nominal Pipe Dia.	Dimensions for Concrete													Concrete 2 End Secs. cu. yd. (m^3)	Wire Fabric 2 End Secs. sq. yd. (m^2)
		A	B	C	D	E	F	G	H	J	K	M	N	α		
5°	42 (1050)	4′-1″ (1.25 m)	26 (660)	4′-10½″ (1.49 m)	4′-3¼″ (1.299 m)	13′-5″ (4.09 m)	6′-0½″ (1.85 m)	5′-6½″ (1.69 m)	4′-3″ (1.295 m)	6′-8¼″ (2.04 m)	6′-8¾″ (2.05 m)	3½ (90)	3 (80)	85°	6.0 (4.6)	46 (38)
	48 (1200)	4′-6″ (1.35 m)	29 (740)	5′-5″ (1.64 m)	4′-10¼″ (1.478 m)	14′-10″ (4.48 m)	6′-8″ (2.0 m)	6′-1¼″ (1.83 m)	4′-10″ (1.473 m)	7′-4¾″ (2.23 m)	7′-5¼″ (2.25 m)	3½ (90)	3 (80)	85°	7.2 (5.5)	53 (44)
	54 (1350)	4′-11″ (1.56 m)	32 (810)	5′-11½″ (1.85 m)	5′-5¼″ (1.657 m)	16′-3″ (5.08 m)	7′-3¼″ (2.31 m)	6′-8″ (2.12 m)	5′-5″ (1.651 m)	8′-1¼″ (2.53 m)	8′-1¾″ (2.55 m)	3½ (90)	3 (80)	85°	8.4 (6.4)	65 (55)
	60 (1500)	5′-4″ (1.62 m)	35 (890)	6′-6″ (1.97 m)	6′-0¼″ (1.835 m)	17′-8″ (5.37 m)	7′-10¾″ (2.4 m)	7′-2¾″ (2.2 m)	6′-0″ (1.829 m)	8′-9¾″ (2.68 m)	8′-10¼″ (2.69 m)	3½ (90)	3 (80)	85°	9.8 (7.5)	71 (59)
10°	42 (1050)	4′-1″ (1.25 m)	26 (660)	4′-10½″ (1.49 m)	4′-3¾″ (1.314 m)	13′-6½″ (4.13 m)	6′-4¼″ (1.94 m)	5′-4″ (1.63 m)	4′-3″ (1.295 m)	6′-8¾″ (2.05 m)	6′-9¾″ (2.08 m)	3¾ (100)	3 (80)	80°	6.3 (4.8)	47 (39)
	48 (1200)	4′-6″ (1.35 m)	29 (740)	5′-5″ (1.64 m)	4′-11″ (1.495 m)	15′-0″ (4.52 m)	7′-0″ (2.1 m)	5′-10½″ (1.77 m)	4′-10″ (1.473 m)	7′-5½″ (2.25 m)	7′-6½″ (2.27 m)	3¾ (100)	3 (80)	80°	7.5 (5.7)	54 (45)
	54 (1350)	4′-11″ (1.56 m)	32 (810)	5′-11½″ (1.85 m)	5′-6″ (1.676 m)	16′-5″ (5.13 m)	7′-7¾″ (2.43 m)	6′-5″ (2.04 m)	5′-5″ (1.651 m)	8′-2″ (2.55 m)	8′-3″ (2.58 m)	3¾ (100)	3 (80)	80°	8.8 (6.7)	66 (56)
	60 (1500)	5′-4″ (1.62 m)	35 (890)	6′-6″ (1.97 m)	6′-1″ (1.857 m)	17′-10½″ (5.43 m)	8′-3½″ (2.52 m)	6′-11½″ (2.12 m)	6′-0″ (1.829 m)	8′-10¾″ (2.7 m)	8′-11¾″ (2.73 m)	3¾ (100)	3 (80)	80°	10.3 (7.9)	73 (61)
15°	42 (1050)	4′-1″ (1.25 m)	26 (660)	4′-10½″ (1.49 m)	4′-4¾″ (1.34 m)	13′-9½″ (4.2 m)	6′-8½″ (2.05 m)	5′-1¾″ (1.57 m)	4′-3″ (1.295 m)	6′-10″ (2.08 m)	6′-11½″ (2.12 m)	4 (100)	2¾ (70)	75°	6.6 (5.0)	48 (40)
	48 (1200)	4′-6″ (1.35 m)	29 (740)	5′-5″ (1.64 m)	5′-0″ (1.524 m)	15′-3″ (4.6 m)	7′-4¾″ (2.22 m)	5′-8″ (1.71 m)	4′-10″ (1.473 m)	7′-6¾″ (2.28 m)	7′-8¼″ (2.32 m)	4 (100)	2¾ (70)	75°	7.9 (6.0)	55 (46)
	54 (1350)	4′-11″ (1.56 m)	32 (810)	5′-11½″ (1.85 m)	5′-7¼″ (1.709 m)	16′-8¾″ (5.22 m)	8′-1″ (2.57 m)	6′-2¼″ (1.97 m)	5′-5″ (1.651 m)	8′-3¾″ (2.59 m)	8′-5″ (2.63 m)	4 (100)	2¾ (70)	75°	9.3 (7.1)	68 (57)
	60 (1500)	5′-4″ (1.62 m)	35 (890)	6′-6″ (1.97 m)	6′-2½″ (1.893 m)	18′-2¼″ (5.53 m)	8′-9¼″ (2.66 m)	6′-8¾″ (2.05 m)	6′-0″ (1.829 m)	9′-0½″ (2.75 m)	9′-1¾″ (2.78 m)	4 (100)	2¾ (70)	75°	10.8 (8.3)	75 (62)
20°	42 (1050)	4′-1″ (1.25 m)	26 (660)	4′-10½″ (1.49 m)	4′-6¼″ (1.378 m)	14′-1¾″ (4.31 m)	7′-1½″ (2.17 m)	4′-11¾″ (1.52 m)	4′-3″ (1.295 m)	7′-0″ (2.13 m)	7′-1¾″ (2.18 m)	4¼ (105)	2½ (70)	70°	7.0 (5.4)	49 (41)
	48 (1200)	4′-6″ (1.35 m)	29 (740)	5′-5″ (1.64 m)	5′-1¾″ (1.567 m)	15′-7¾″ (4.72 m)	7′-10¼″ (2.36 m)	5′-6″ (1.65 m)	4′-10″ (1.473 m)	7′-9″ (2.34 m)	7′-10¾″ (2.38 m)	4¼ (105)	2½ (70)	70°	8.4 (6.4)	57 (48)
	54 (1350)	4′-11″ (1.56 m)	32 (810)	5′-11½″ (1.85 m)	5′-9¼″ (1.756 m)	17′-2″ (5.36 m)	8′-6¾″ (2.72 m)	6′-0″ (1.91 m)	5′-5″ (1.651 m)	8′-6″ (2.65 m)	8′-8″ (2.7 m)	4¼ (105)	2½ (70)	70°	9.9 (7.6)	70 (59)
	60 (1500)	5′-4″ (1.62 m)	35 (890)	6′-6″ (1.97 m)	6′-4½″ (1.946 m)	18-8″ (5.68 m)	9′-3½″ (2.83 m)	6′-6¼″ (1.98 m)	6′-0″ (1.829 m)	9′-3″ (2.82 m)	9′-5″ (2.86 m)	4¼ (105)	2½ (70)	70°	11.5 (8.8)	77 (64)
25°	42 (1050)	4′-1″ (1.25 m)	26 (660)	4′-10½″ (1.49 m)	4′-8¼″ (1.428 m)	14′-7½″ (4.46 m)	7′-7¼″ (2.32 m)	4′-10″ (1.48 m)	4′-3″ (1.295 m)	7′-2½″ (2.22 m)	7′-5″ (2.26 m)	4½ (110)	2¼ (60)	65°	7.4 (5.7)	51 (43)
	48 (1200)	4′-6″ (1.35 m)	29 (740)	5′-5″ (1.64 m)	5′-4″ (1.625 m)	16′-2¼″ (4.88 m)	8′-4½″ (2.52 m)	5′-4″ (1.6 m)	4′-10″ (1.473 m)	8′-0″ (2.41 m)	8′-2¼″ (2.47 m)	4½ (110)	2¼ (60)	65°	8.9 (6.8)	59 (49)
	54 (1350)	4′-11″ (1.56 m)	32 (810)	5′-11½″ (1.85 m)	5′-11¾″ (1.821 m)	17′-9″ (5.54 m)	9′-1¾″ (2.91 m)	5′-10″ (1.85 m)	5′-5″ (1.651 m)	8′-9¼″ (2.74 m)	8′-11¾″ (2.8 m)	4½ (110)	2¼ (60)	65°	10.5 (8.0)	73 (61)
	60 (1500)	5′-4″ (1.62 m)	35 (890)	6′-6″ (1.97 m)	6′-7½″ (2.018 m)	19′-3¾″ (5.87 m)	9′-11″ (3.02 m)	6′-4″ (1.92 m)	6′-0″ (1.829 m)	9′-6¾″ (2.90 m)	9′-9″ (2.97 m)	4½ (110)	2¼ (60)	65°	12.2 (9.3)	80 (67)
30°	42 (1050)	4′-1″ (1.25 m)	26 (660)	4′-10½″ (1.49 m)	4′-11″ (1.495 m)	15′-3″ (4.65 m)	8′-2″ (2.49 m)	4′-8½″ (1.44 m)	4′-3″ (1.295 m)	7′-6″ (2.29 m)	7′-9″ (2.36 m)	4½ (120)	2¼ (60)	60°	7.9 (6.0)	53 (45)
	48 (1200)	4′-6″ (1.35 m)	29 (740)	5′-5″ (1.64 m)	5′-7″ (1.7 m)	16′-10½″ (5.1 m)	9′-0″ (2.7 m)	5′-2¼″ (1.56 m)	4′-10″ (1.473 m)	8′-3¾″ (2.51 m)	8′-6¾″ (2.59 m)	4½ (120)	2¼ (60)	60°	9.5 (7.3)	62 (52)
	54 (1350)	4′-11″ (1.56 m)	32 (810)	5′-11½″ (1.85 m)	6′-3″ (1.906 m)	18′-6¼″ (5.79 m)	9′-10″ (3.12 m)	5′-8″ (1.8 m)	5′-5″ (1.651 m)	9′-1¾″ (2.85 m)	9′-4½″ (2.92 m)	4½ (120)	2¼ (60)	60°	11.2 (8.6)	77 (64)
	60 (1500)	5′-4″ (1.62 m)	35 (890)	6′-6″ (1.97 m)	6′-11¼″ (2.111 m)	20′-2″ (6.13 m)	10′-8″ (3.24 m)	6′-2″ (1.87 m)	6′-0″ (1.829 m)	9′-11½″ (3.03 m)	10′-2½″ (3.1 m)	4½ (120)	2¼ (60)	60°	13.1 (10.0)	84 (70)

Illinois Department of Transportation

APPROVED January 1, 2009
Ralph E. Anderson
ENGINEER OF BRIDGES AND STRUCTURES

APPROVED January 1, 2009
Eric E. Harm
ENGINEER OF DESIGN AND ENVIRONMENT

ISSUED 1-1-97

REINFORCED CONCRETE END SECTIONS
FOR PIPE CULVERTS
42″ (1050 mm) THRU 60″ (1500 mm) DIA.
SKEWED WITH ROADWAY
(Sheet 2 of 5)

STANDARD 542206-01

WINGS FOR 1:1½ SLOPE

Skew Angle	Nominal Pipe Dia.	Dimensions for Concrete													Concrete 2 End Secs. cu. yd. (m^3)	Wire Fabric 2 End Secs. sq. yd. (m^2)
		A	B	C	D	E	F	G	H	J	K	M	N	α		
35°	42 (1050)	4′-1″ (1.25 m)	26 (660)	4′-10½″ (1.49 m)	5′-2¼″ (1.58 m)	16′-0¾″ (4.59 m)	8′-10″ (2.71 m)	4′-7¼″ (1.41 m)	4′-3″ (1.295 m)	7′-10¾″ (2.4 m)	8′-2″ (2.49 m)	4¾ (120)	2 (50)	55°	8.5 (6.5)	56 (47)
	48 (1200)	4′-6″ (1.35 m)	29 (740)	5′-5″ (1.64 m)	5′-10¾″ (1.798 m)	17′-9½″ (5.36 m)	9′-9″ (2.93 m)	5′-1″ (1.53 m)	4′-10″ (1.473 m)	8′-9″ (2.64 m)	9′-0½″ (2.73 m)	4¾ (120)	2 (50)	55°	10.2 (7.8)	66 (55)
	54 (1350)	4′-11″ (1.56 m)	32 (810)	5′-11½″ (1.85 m)	6′-7¼″ (2.015 m)	19′-6¼″ (6.1 m)	10′-7¾″ (3.38 m)	5′-6½″ (1.76 m)	5′-5″ (1.651 m)	9′-7½″ (3.01 m)	9′-10¾″ (3.09 m)	4¾ (120)	2 (50)	55°	12.0 (9.2)	81 (68)
	60 (1500)	5′-4″ (1.62 m)	35 (890)	6′-6″ (1.97 m)	7′-4″ (2.232 m)	21′-3″ (6.46 m)	11′-6½″ (3.51 m)	6′-0¼″ (1.83 m)	6′-0″ (1.829 m)	10′-5¾″ (3.19 m)	10′-9¼″ (3.27 m)	4¾ (120)	2 (50)	55°	14.1 (10.8)	89 (74)
40°	42 (1050)	4′-1″ (1.25 m)	26 (660)	4′-10½″ (1.49 m)	5′-6½″ (1.69 m)	17′-1¼″ (5.21 m)	9′-8″ (2.95 m)	4′-6″ (1.38 m)	4′-3″ (1.295 m)	8′-4¾″ (2.56 m)	8′-8½″ (2.65 m)	5 (130)	1¾ (50)	50°	9.1 (7.0)	60 (50)
	48 (1200)	4′-6″ (1.35 m)	29 (740)	5′-5″ (1.64 m)	6′-3¾″ (1.922 m)	18′-11¼″ (5.72 m)	10′-7¾″ (3.2 m)	4′-11½″ (1.49 m)	4′-10″ (1.473 m)	9′-3¾″ (2.81 m)	9′-7½″ (2.91 m)	5 (130)	1¾ (50)	50°	11.0 (8.4)	70 (58)
	54 (1350)	4′-11″ (1.56 m)	32 (810)	5′-11½″ (1.85 m)	7′-0¾″ (2.155 m)	20′-9½″ (6.5 m)	11′-7½″ (3.69 m)	5′-5″ (1.72 m)	5′-5″ (1.651 m)	10′-2¾″ (3.2 m)	10′-6¾″ (3.3 m)	5 (130)	1¾ (50)	50°	13.0 (9.9)	86 (72)
	60 (1500)	5′-4″ (1.62 m)	35 (890)	6′-6″ (1.97 m)	7′-10″ (2.387 m)	22′-7¾″ (6.89 m)	12′-7½″ (3.84 m)	6′-0″ (1.79 m)	6′-0″ (1.829 m)	11′-2″ (3.4 m)	11′-5¾″ (3.49 m)	5 (130)	1¾ (50)	50°	15.2 (11.6)	95 (79)
45°	42 (1050)	4′-1″ (1.25 m)	26 (660)	4′-10½″ (1.49 m)	6′-0″ (1.831 m)	18′-5¼″ (5.62 m)	10′-8″ (3.26 m)	4′-5″ (1.35 m)	4′-3″ (1.295 m)	9′-0½″ (2.76 m)	9′-4¾″ (2.86 m)	5¼ (140)	1½ (40)	45°	10.0 (7.6)	65 (54)
	48 (1200)	4′-6″ (1.35 m)	29 (740)	5′-5″ (1.64 m)	6′-10″ (2.083 m)	20′-5¼″ (6.17 m)	11′-9″ (3.53 m)	4′-10½″ (1.46 m)	4′-10″ (1.473 m)	10′-0½″ (3.03 m)	10′-4¾″ (3.14 m)	5¼ (140)	1½ (40)	45°	12.0 (9.2)	75 (63)
	54 (1350)	4′-11″ (1.56 m)	32 (810)	5′-11½″ (1.85 m)	7′-8″ (2.334 m)	22′-5¼″ (7.01 m)	12′-10¼″ (4.08 m)	5′-3¾″ (1.69 m)	5′-5″ (1.651 m)	11′-0½″ (3.45 m)	11′-4¾″ (3.56 m)	5¼ (140)	1½ (40)	45°	14.2 (10.9)	93 (78)
	60 (1500)	5′-4″ (1.62 m)	35 (890)	6′-6″ (1.97 m)	8′-5¾″ (2.586 m)	24′-5¼″ (7.43 m)	13′-11¼″ (4.24 m)	5′-9¼″ (1.76 m)	6′-0″ (1.829 m)	12′-0½″ (3.66 m)	12′-4¾″ (3.77 m)	5¼ (140)	1½ (40)	45°	16.7 (12.8)	103 (86)
50°	42 (1050)	4′-1″ (1.25 m)	26 (660)	4′-10½″ (1.49 m)	6′-7¼″ (2.014 m)	20′-2″ (6.15 m)	11′-11¼″ (3.64 m)	4′-4¼″ (1.33 m)	4′-3″ (1.295 m)	9′-10½″ (3.01 m)	10′-3½″ (3.14 m)	5½ (140)	1½ (40)	40°	11.0 (8.4)	71 (59)
	48 (1200)	4′-6″ (1.35 m)	29 (740)	5′-5″ (1.64 m)	7′-6¼″ (2.291 m)	22′-4½″ (6.75 m)	13′-2″ (3.95 m)	4′-9½″ (1.44 m)	4′-10″ (1.473 m)	10′-11¾″ (3.31 m)	11′-4¾″ (3.44 m)	5½ (140)	1½ (40)	40°	13.3 (10.2)	82 (69)
	54 (1350)	4′-11″ (1.56 m)	32 (810)	5′-11½″ (1.85 m)	8′-5″ (2.568 m)	24′-7″ (7.68 m)	14′-4½″ (4.56 m)	5′-2¾″ (1.66 m)	5′-5″ (1.651 m)	12′-1″ (3.78 m)	12′-6″ (3.9 m)	5½ (140)	1½ (40)	40°	15.8 (12.1)	102 (85)
	60 (1500)	5′-4″ (1.62 m)	35 (890)	6′-6″ (1.97 m)	9′-4″ (2.845 m)	26′-9¼″ (8.15 m)	15′-7¼″ (4.72 m)	5′-8″ (1.73 m)	6′-0″ (1.829 m)	13′-2¼″ (4.02 m)	13′-7″ (4.13 m)	5½ (140)	1½ (40)	40°	18.5 (14.1)	112 (94)
55°	42 (1050)	4′-1″ (1.25 m)	26 (660)	4′-10½″ (1.49 m)	7′-5″ (2.257 m)	22′-5¾″ (6.85 m)	13′-7″ (4.14 m)	4′-3½″ (1.31 m)	4′-3″ (1.295 m)	11′-0¼″ (3.36 m)	11′-5½″ (3.49 m)	5¾ (150)	1¼ (30)	35°	12.3 (9.4)	79 (66)
	48 (1200)	4′-6″ (1.35 m)	29 (740)	5′-5″ (1.64 m)	8′-5″ (2.568 m)	24′-11½″ (7.53 m)	14′-11½″ (4.49 m)	4′-8½″ (1.42 m)	4′-10″ (1.473 m)	12′-3″ (3.7 m)	12′-8½″ (3.83 m)	5¾ (150)	1¼ (30)	35°	14.9 (11.4)	92 (77)
	54 (1350)	4′-11″ (1.56 m)	32 (810)	5′-11½″ (1.85 m)	9′-5¼″ (2.878 m)	27′-5″ (8.57 m)	16′-4¼″ (5.19 m)	5′-1¾″ (1.64 m)	5′-5″ (1.651 m)	13′-6″ (4.22 m)	13′-11″ (4.35 m)	5¾ (150)	1¼ (30)	35°	17.7 (13.5)	113 (95)
	60 (1500)	5′-4″ (1.62 m)	35 (890)	6′-6″ (1.97 m)	10′-5½″ (3.188 m)	29′-10¾″ (9.09 m)	17′-8¾″ (5.39 m)	5′-7″ (1.7 m)	6′-0″ (1.829 m)	14′-8¾″ (4.48 m)	15′-2″ (4.61 m)	5¾ (150)	1¼ (30)	35°	20.8 (15.9)	125 (104)
60°	42 (1050)	4′-1″ (1.25 m)	26 (660)	4′-10½″ (1.49 m)	8′-6″ (2.59 m)	25′-7¾″ (7.82 m)	15′-9¼″ (4.81 m)	4′-2¾″ (1.29 m)	4′-3″ (1.295 m)	12′-7″ (3.84 m)	13′-0¾″ (3.98 m)	6¼ (160)	1 (30)	30°	14.1 (10.8)	89 (75)
	48 (1200)	4′-6″ (1.35 m)	29 (740)	5′-5″ (1.64 m)	9′-8″ (2.946 m)	28′-5¾″ (8.59 m)	17′-4¾″ (5.22 m)	4′-8″ (1.4 m)	4′-10″ (1.473 m)	14′-0″ (4.22 m)	14′-5¾″ (4.37 m)	6¼ (160)	1 (30)	30°	17.0 (13.0)	104 (87)
	54 (1350)	4′-11″ (1.56 m)	32 (810)	5′-11½″ (1.85 m)	10′-10″ (3.302 m)	31′-3¾″ (9.79 m)	19′-0″ (6.03 m)	5′-1″ (1.62 m)	5′-5″ (1.651 m)	15′-5″ (4.82 m)	15′-10¾″ (4.97 m)	6¼ (160)	1 (30)	30°	20.3 (15.5)	129 (108)
	60 (1500)	5′-4″ (1.62 m)	35 (890)	6′-6″ (1.97 m)	12′-0″ (3.658 m)	34′-1¾″ (10.39 m)	20′-7¼″ (6.26 m)	5′-6¼″ (1.68 m)	6′-0″ (1.829 m)	16′-10″ (5.12 m)	17′-3¾″ (5.27 m)	6¼ (160)	1 (30)	30°	23.8 (18.2)	142 (119)

Illinois Department of Transportation

APPROVED January 1, 2009
Ralph E. Anderson
ENGINEER OF BRIDGES AND STRUCTURES

APPROVED January 1, 2009
Eric E. Harm
ENGINEER OF DESIGN AND ENVIRONMENT

ISSUED 1-1-97

REINFORCED CONCRETE END SECTIONS
FOR PIPE CULVERTS
42″ (1050 mm) THRU 60″ (1500 mm) DIA.
SKEWED WITH ROADWAY
(Sheet 3 of 5)

STANDARD 542206-01

WINGS FOR 1:2 SLOPE

Skew Angle	Nominal Pipe Dia.	Dimensions for Concrete													Concrete 2 End Secs. cu. yd. (m^3)	Wire Fabric 2 End Secs. sq. yd. (m^2)
		A	B	C	D	E	F	G	H	J	K	M	N	α		
5°	42 (1050)	5′-5″ (1.66 m)	26 (660)	4′-10½″ (1.49 m)	4′-3¼″ (1.299 m)	16′-1″ (4.29 m)	8′-0¼″ (2.46 m)	7′-4¼″ (2.26 m)	4′-3″ (1.295 m)	8′-0¼″ (2.45 m)	8′-0¾″ (2.47 m)	3½ (90)	3 (80)	85°	8.0 (6.1)	61 (51)
	48 (1200)	6′-0″ (1.8 m)	29 (740)	5′-5″ (1.64 m)	4′-10¼″ (1.478 m)	17′-10″ (5.38 m)	8′-10½″ (2.67 m)	8′-1¾″ (2.44 m)	1.473 m (4′-10″)	8′-10¾″ (2.68 m)	8′-11¼″ (2.7 m)	3½ (90)	3 (80)	85°	9.6 (7.3)	71 (59)
	54 (1350)	6′-7″ (2.08 m)	32 (810)	5′-11½″ (1.85 m)	5′-5¼″ (1.657 m)	19′-7″ (6.12 m)	9′-9″ (3.08 m)	8′-11¼″ (2.82 m)	1.651 m (5′-5″)	9′-9¼″ (3.05 m)	9′-9¾″ (3.07 m)	3½ (90)	3 (80)	85°	11.3 (8.6)	88 (74)
	60 (1500)	7′-2″ (2.16 m)	35 (890)	6′-6″ (1.97 m)	6′-0¼″ (1.835 m)	21′-4¼″ (6.46 m)	10′-7¼″ (3.2 m)	9′-8¾″ (2.93 m)	1.829 m (6′-0″)	10′-8″ (3.22 m)	10′-8¼″ (3.24 m)	3½ (90)	3 (80)	85°	13.2 (10.1)	96 (80)
10°	42 (1050)	5′-5″ (1.66 m)	26 (660)	4′-10½″ (1.49 m)	4′-3¾″ (1.314 m)	16′-3″ (4.97 m)	8′-5″ (2.59 m)	7′-0¾″ (2.17 m)	1.295 m (4′-3″)	8′-1″ (2.47 m)	8′-2″ (2.5 m)	3¾ (100)	3 (80)	80°	8.3 (6.3)	62 (52
	48 (1200)	6′-0″ (1.8 m)	29 (740)	5′-5″ (1.64 m)	4′-11″ (1.495 m)	18′-0½″ (5.43 m)	9′-4″ (2.8 m)	7′-10″ (2.35 m)	1.473 m (4′-10″)	8′-11¾″ (2.71 m)	9′-0¾″ (2.73 m)	3¾ (100)	3 (80)	80°	9.9 (7.6)	72 (60)
	54 (1350)	6′-7″ (2.08 m)	32 (810)	5′-11½″ (1.85 m)	5′-6″ (1.676 m)	19′-9¾″ (6.19 m)	10′-3″ (3.24 m)	8′-7¼″ (2.72 m)	1.651 m (5′-5″)	9′-10½″ (3.08 m)	9′-11¼″ (3.11 m)	3¾ (100)	3 (80)	80°	11.7 (8.9)	90 (75)
	60 (1500)	7′-2″ (2.16 m)	35 (890)	6′-6″ (1.97 m)	6′-1″ (1.857 m)	21′-7″ (6.53 m)	11′-1¾″ (3.36 m)	9′-4¼″ (2.82 m)	1.829 m (6′-0″)	10′-9″ (3.25 m)	10′-10″ (3.28 m)	3¾ (100)	3 (80)	80°	13.7 (10.5)	98 (82)
15°	42 (1050)	5′-5″ (1.66 m)	26 (660)	4′-10½″ (1.49 m)	4′-4¾″ (1.34 m)	16′-6½″ (5.06 m)	8′-10¾″ (2.73 m)	6′-10″ (2.1 m)	1.295 m (4′-3″)	8′-2½″ (2.51 m)	8′-4″ (2.55 m)	4 (100)	2¾ (70)	75°	8.6 (6.6)	64 (53)
	48 (1200)	6′-0″ (1.8 m)	29 (740)	5′-5″ (1.64 m)	5′-0″ (1.524 m)	18′-4½″ (5.54 m)	9′-10¼″ (2.96 m)	7′-6¾″ (2.27 m)	1.473 m (4′-10″)	9′-1½″ (2.75 m)	9′-3″ (2.79 m)	4 (100)	2¾ (70)	75°	10.4 (8.0)	74 (62)
	54 (1350)	6′-7″ (2.08 m)	32 (810)	5′-11½″ (1.85 m)	5′-7¼″ (1.709 m)	20′-2″ (6.3 m)	10′-9¾″ (3.42 m)	8′-3½″ (2.63 m)	1.651 m (5′-5″)	10′-0¼″ (3.13 m)	10′-1¾″ (3.17 m)	4 (100)	2¾ (70)	75°	12.3 (9.4)	92 (77)
	60 (1500)	7′-2″ (2.16 m)	35 (890)	6′-6″ (1.97 m)	6′-2½″ (1.893 m)	21′-11¾″ (6.65 m)	11′-9¼″ (3.55 m)	9′-0½″ (2.73 m)	1.829 m (6′-0″)	10′-11¼″ (3.31 m)	11′-0½″ (3.34 m)	4 (100)	2¾ (70)	75°	14.3 (10.9)	100 (84)
20°	42 (1050)	5′-5″ (1.66 m)	26 (660)	4′-10½″ (1.49 m)	4′-6¼″ (1.378 m)	16′-11¾″ (5.19 m)	9′-5¼″ (2.9 m)	6′-7¼″ (2.03 m)	1.295 m (4′-3″)	8′-5″ (2.57 m)	8′-6¾″ (2.62 m)	4¼ (110)	2½ (70)	70°	9.0 (6.9)	66 (55)
	48 (1200)	6′-0″ (1.8 m)	29 (740)	5′-5″ (1.64 m)	5′-1¾″ (1.567 m)	18′-10″ (5.68 m)	10′-5½″ (3.14 m)	7′-4″ (2.2 m)	1.473 m (4′-10″)	9′-4″ (2.81 m)	9′-6″ (2.86 m)	4¼ (110)	2½ (70)	70°	10.9 (8.3)	76 (64)
	54 (1350)	6′-7″ (2.08 m)	32 (810)	5′-11½″ (1.85 m)	5′-9¼″ (1.756 m)	20′-8½″ (6.47 m)	11′-5¾″ (3.63 m)	8′-0½″ (2.54 m)	1.651 m (5′-5″)	10′-3¼″ (3.21 m)	10′-5¼″ (3.26 m)	4¼ (110)	2½ (70)	70°	12.9 (9.9)	94 (79)
	60 (1500)	7′-2″ (2.16 m)	35 (890)	6′-6″ (1.97 m)	6′-4½″ (1.946 m)	22′-6¾″ (6.83 m)	12′-6″ (3.77 m)	8′-9″ (2.64 m)	1.829 m (6′-0″)	11′-2½″ (3.39 m)	11′-4¼″ (3.44 m)	4¼ (110)	2½ (70)	70°	15.1 (11.5)	103 (86)
25°	42 (1050)	5′-5″ (1.66 m)	26 (660)	4′-10½″ (1.49 m)	4′-8¼″ (1.428 m)	17′-6¾″ (5.37 m)	10′-1″ (3.09 m)	6′-5″ (1.64 m)	1.295 m (4′-3″)	8′-8¼″ (2.65 m)	8′-10½″ (2.72 m)	4½ (110)	2¼ (60)	65°	9.5 (7.3)	65 (55)
	48 (1200)	6′-0″ (1.8 m)	29 (740)	5′-5″ (1.64 m)	5′-4″ (1.625 m)	19′-6″ (5.88 m)	11′-2′ (3.35 m)	7′-1¼″ (2.14 m)	1.473 m (4′-10″)	9′-7¾″ (2.91 m)	9′-10¼″ (2.97 m)	4½ (110)	2¼ (60)	65°	11.5 (8.8)	79 (66)
	54 (1350)	6′-7″ (2.08 m)	32 (810)	5′-11½″ (1.85 m)	5′-11¾″ (1.821 m)	21′-5″ (6.69 m)	12′-3″ (3.87 m)	7′-9¾″ (2.47 m)	1.651 m (5′-5″)	10′-7¼″ (3.31 m)	10′-9¾″ (3.37 m)	4½ (110)	2¼ (60)	65°	13.6 (10.4)	98 (82)
	60 (1500)	7′-2″ (2.16 m)	35 (890)	6′-6″ (1.97 m)	6′-7½″ (2.018 m)	23′-4¼″ (7.06 m)	13′-4″ (4.02 m)	8′-6″ (2.56 m)	1.829 m (6′-0″)	11′-7″ (3.5 m)	11′-9¼″ (3.56 m)	4½ (110)	2¼ (60)	65°	15.9 (12.2)	107 (90)
30°	42 (1050)	5′-5″ (1.66 m)	26 (660)	4′-10½″ (1.49 m)	4′-11″ (1.495 m)	18′-4″ (5.61 m)	10′-10″ (3.32 m)	6′-3″ (1.92 m)	1.295 m (4′-3″)	9′-0½″ (2.77 m)	9′-3½″ (2.84 m)	4½ (120)	2¼ (60)	60°	10.1 (7.7)	71 (59)
	48 (1200)	6′-0″ (1.8 m)	29 (740)	5′-5″ (1.64 m)	5′-7″ (1.7 m)	20′-4¼″ (6.13 m)	12′-0″ (3.6 m)	6′-11¼″ (2.08 m)	1.473 m (4′-10″)	10′-0¾″ (3.03 m)	10′-3½″ (3.1 m)	4½ (120)	2¼ (60)	60°	12.2 (9.3)	82 (69)
	54 (1350)	6′-7″ (2.08 m)	32 (810)	5′-11½″ (1.85 m)	6′-3″ (1.906 m)	22′-4½″ (6.99 m)	13′-2″ (4.16 m)	7′-7¼″ (2.41 m)	1.651 m (5′-5″)	11′-0¾″ (3.46 m)	11′-3¾″ (3.53 m)	4½ (120)	2¼ (60)	60°	14.4 (11.0)	102 (86)
	60 (1500)	7′-2″ (2.16 m)	35 (890)	6′-6″ (1.97 m)	6′-11¼″ (2.111 m)	24′-4¾″ (7.38 m)	14′-4″ (4.32 m)	8′-3¼″ (2.45 m)	1.829 m (6′-0″)	12′-1″ (3.65 m)	12′-3¾″ (3.73 m)	4½ (120)	2¼ (60)	60°	16.9 (12.9)	112 (93)

Illinois Department of Transportation

APPROVED January 1, 2009
Ralph E. Anderson
ENGINEER OF BRIDGES AND STRUCTURES

APPROVED January 1, 2009
Eric E. Harm
ENGINEER OF DESIGN AND ENVIRONMENT

ISSUED 1-1-97

REINFORCED CONCRETE END SECTIONS
FOR PIPE CULVERTS
42″ (1050 mm) THRU 60″ (1500 mm) DIA.
SKEWED WITH ROADWAY
(Sheet 4 of 5)

STANDARD 542206-01

WINGS FOR 1:2 SLOPE

Skew Angle	Nominal Pipe Dia.	Dimensions for Concrete													Concrete 2 End Secs. cu. yd. (m^3)	Wire Fabric 2 End Secs. sq. yd. (m^2)
		A	B	C	D	E	F	G	H	J	K	M	N	α		
35°	42 (1050)	5′-5″ (1.66 m)	26 (660)	4′-10½″ (1.49 m)	5′-2¼″ (1.58 m)	19′-3¾″ (5.91 m)	11′-8¾″ (3.6 m)	6′-1¼″ (1.87 m)	4′-3″ (1.295 m)	9′-6¼″ (2.91 m)	9′-9½″ (3.0 m)	4¾ (120)	2 (50)	55°	10.8 (8.3)	75 (63)
	48 (1200)	6′-0″ (1.80 m)	29 (740)	5′-5″ (1.64 m)	5′-10¾″ (1.798 m)	21′-5½″ (6.47 m)	13′-0″ (3.9 m)	6′-9¼″ (2.03 m)	4′-10″ (1.473 m)	10′-7″ (3.91 m)	10′-10½″ (3.28 m)	4¾ (120)	2 (50)	55°	13.0 (9.9)	87 (73)
	54 (1350)	6′-7″ (2.08 m)	32 (810)	5′-11½″ (1.85 m)	6′-7¼″ (2.015 m)	23′-7″ (7.37 m)	14′-3″ (4.51 m)	7′-5″ (2.35 m)	5′-5″ (1.651 m)	11′-7¾″ (3.64 m)	11′-11¼″ (3.73 m)	4¾ (120)	2 (50)	55°	15.4 (11.8)	108 (90)
	1500 (1500)	7′-2″ (2.16 m)	35 (890)	6′-6″ (1.97 m)	7′-4″ (2.232 m)	25′-8¾″ (7.78 m)	15′-6¼″ (4.68 m)	8′-1″ (2.44 m)	6′-0″ (1.829 m)	12′-8¾″ (3.85 m)	13′-0″ (3.93 m)	4¾ (120)	2 (50)	55°	18.1 (13.8)	118 (99)
40°	42 (1050)	5′-5″ (1.66 m)	26 (660)	4′-10½″ (1.49 m)	5′-6½″ (1.69 m)	20′-7″ (6.29 m)	12′-9¾″ (3.93 m)	5′-11¾″ (1.84 m)	4′-3″ (1.295 m)	10′-1½″ (3.1 m)	10′-5½″ (3.19 m)	5 (130)	1¾ (50)	50°	11.6 (8.9)	80 (67)
	48 (1200)	6′-0″ (1.80 m)	29 (740)	5′-5″ (1.64 m)	6′-3¾″ (1.922 m)	22′-10¼″ (6.89 m)	14′-2¼″ (4.26 m)	6′-7½″ (1.99 m)	4′-10″ (1.473 m)	11′-3¼″ (3.4 m)	11′-7″ (3.49 m)	5 (130)	1¾ (50)	50°	14.0 (10.7)	93 (77)
	54 (1350)	6′-7″ (2.08 m)	32 (810)	5′-11½″ (1.85 m)	7′-0¾″ (2.155 m)	25′-1¾″ (7.86 m)	15′-7″ (4.93 m)	7′-3¼″ (2.3 m)	5′-5″ (1.651 m)	12′-5″ (3.88 m)	12′-8¾″ (3.98 m)	5 (130)	1¾ (50)	50°	16.7 (12.8)	115 (96)
	1500 (1500)	7′-2″ (2.16 m)	35 (890)	6′-6″ (1.97 m)	7′-10″ (2.387 m)	27′-5¼″ (8.3 m)	16′-11½″ (5.11 m)	7′-11″ (2.39 m)	6′-0″ (1.829 m)	13′-6¾″ (4.1 m)	13′-10½″ (4.2 m)	5 (130)	1¾ (50)	50°	19.5 (14.9)	126 (105)
45°	42 (1050)	5′-5″ (1.66 m)	26 (660)	4′-10½″ (1.49 m)	6′-0″ (1.831 m)	22′-2½″ (6.79 m)	14′-1¾″ (4.34 m)	5′-10¼″ (1.8 m)	4′-3″ (1.295 m)	10′-11″ (3.34 m)	11′-3½″ (3.45 m)	5¼ (140)	1½ (40)	45°	12.6 (9.6)	86 (72)
	48 (1200)	6′-0″ (1.80 m)	29 (740)	5′-5″ (1.64 m)	6′-10″ (2.083 m)	24′-8¼″ (7.44 m)	15′-8¼″ (4.7 m)	6′-6″ (1.95 m)	4′-10″ (1.473 m)	12′-2″ (3.67 m)	12′-6¼″ (3.77 m)	5¼ (140)	1½ (40)	45°	15.2 (12.0)	100 (83)
	54 (1350)	6′-7″ (2.08 m)	32 (810)	5′-11½″ (1.85 m)	7′-8″ (2.334 m)	27′-1¾″ (8.48 m)	17′-2½″ (5.44 m)	7′-1½″ (2.25 m)	5′-5″ (1.651 m)	13′-4¾″ (4.19 m)	13′-9″ (4.29 m)	5¼ (140)	1½ (40)	45°	18.2 (13.9)	124 (104)
	1500 (1500)	7′-2″ (2.16 m)	35 (890)	6′-6″ (1.97 m)	8′-5¾″ (2.586 m)	29′-7½″ (8.96 m)	18′-8¾″ (5.65 m)	7′-9″ (2.34 m)	6′-0″ (1.829 m)	14′-7½″ (4.43 m)	15′-0″ (4.53 m)	5¼ (140)	1½ (40)	45°	21.3 (16.3)	136 (114)
50°	42 (1050)	5′-5″ (1.66 m)	26 (660)	4′-10½″ (1.49 m)	6′-7¼″ (2.014 m)	24′-3¾″ (7.44 m)	15′-10″ (4.86 m)	5′-9¼″ (1.77 m)	4′-3″ (1.295 m)	11′-11½″ (3.66 m)	12′-4¼″ (3.78 m)	5½ (150)	1½ (40)	40°	13.9 (10.6)	94 (78)
	48 (1200)	6′-0″ (1.80 m)	29 (740)	5′-5″ (1.64 m)	7′-6¼″ (2.291 m)	27′-0½″ (8.15 m)	17′-6½″ (5.27 m)	6′-4½″ (1.92 m)	4′-10″ (1.473 m)	13′-3¾″ (4.02 m)	13′-8¾″ (4.13 m)	5½ (150)	1½ (40)	40°	16.8 (12.8)	109 (91)
	54 (1350)	6′-7″ (2.08 m)	32 (810)	5′-11½″ (1.85 m)	8′-5″ (2.568 m)	29′-9¼″ (9.3 m)	19′-3″ (6.09 m)	7′-0″ (2.21 m)	5′-5″ (1.651 m)	14′-8¼″ (4.59 m)	15′-1″ (4.71 m)	5½ (150)	1½ (40)	40°	20.0 (15.3)	135 (113)
	1500 (1500)	7′-2″ (2.16 m)	35 (890)	6′-6″ (1.97 m)	9′-4″ (2.845 m)	32′-5¾″ (9.82 m)	20′-11½″ (6.32 m)	7′-7½″ (2.3 m)	6′-0″ (1.829 m)	16′-0½″ (4.86 m)	16′-5¼″ (4.97 m)	5½ (150)	1½ (40)	40°	23.5 (18.0)	148 (124)
55°	42 (1050)	5′-5″ (1.66 m)	26 (660)	4′-10½″ (1.49 m)	7′-5″ (2.257 m)	27′-1½″ (8.3 m)	18′-0¼″ (5.52 m)	5′-8¼″ (1.74 m)	4′-3″ (1.295 m)	13′-4¼″ (4.08 m)	13′-9¼″ (4.22 m)	5¾ (150)	1¼ (30)	35°	15.5 (11.9)	104 (87)
	48 (1200)	6′-0″ (1.80 m)	29 (740)	5′-5″ (1.64 m)	8′-5″ (2.568 m)	30′-2¼″ (9.1 m)	19′-11½″ (5.99 m)	6′-3½″ (1.89 m)	4′-10″ (1.473 m)	14′-10½″ (4.48 m)	15′-3¾″ (4.62 m)	5¾ (150)	1¼ (30)	35°	18.8 (14.4)	121 (101)
	54 (1350)	6′-7″ (2.08 m)	32 (810)	5′-11½″ (1.85 m)	9′-5¼″ (2.878 m)	33′-2¾″ (10.39 m)	21′-10¾″ (6.92 m)	6′-10¾″ (2.18 m)	5′-5″ (1.651 m)	16′-4¾″ (5.13 m)	16′-10″ (5.26 m)	5¾ (150)	1¼ (30)	35°	22.4 (17.1)	150 (125)
	1500 (1500)	7′-2″ (2.16 m)	35 (890)	6′-6″ (1.97 m)	10′-5½″ (3.188 m)	36′-3½″ (10.97 m)	23′-10″ (7.18 m)	7′-6¼″ (2.27 m)	6′-0″ (1.829 m)	17′-11¼″ (5.42 m)	18′-4¼″ (5.55 m)	5¾ (150)	1¼ (30)	35°	26.4 (20.2)	165 (138)
60°	42 (1050)	5′-5″ (1.66 m)	26 (660)	4′-10½″ (1.49 m)	8′-6″ (2.59 m)	30′-11¾″ (9.48 m)	20′-11¼″ (6.42 m)	5′-7¼″ (1.72 m)	4′-3″ (1.295 m)	15′-3″ (4.67 m)	15′-8¾″ (4.81 m)	6¼ (160)	1 (30)	30°	17.7 (13.5)	118 (98)
	48 (1200)	6′-0″ (1.80 m)	29 (740)	5′-5″ (1.64 m)	9′-8″ (2.946 m)	34′-5¾″ (10.39 m)	23′-2¼″ (6.96 m)	6′-2½″ (1.87 m)	4′-10″ (1.473 m)	17′-0″ (5.12 m)	17′-5¾″ (5.27 m)	6¼ (160)	1 (30)	30°	21.5 (16.4)	137 (115)
	54 (1350)	6′-7″ (2.08 m)	32 (810)	5′-11½″ (1.85 m)	10′-10″ (3.302 m)	37′-11¾″ (11.87 m)	25′-5¼″ (8.04 m)	6′-9¾″ (2.16 m)	5′-5″ (1.651 m)	18′-9″ (5.86 m)	19′-2¾″ (6.01 m)	6¼ (160)	1 (30)	30°	25.7 (19.6)	170 (142)
	1500 (1500)	7′-2″ (2.16 m)	35 (890)	6′-6″ (1.97 m)	12′-0″ (3.658 m)	41′-5¾″ (12.55 m)	27′-8¼″ (8.35 m)	7′-5″ (2.24 m)	6′-0″ (1.829 m)	20′-6″ (6.2 m)	20′-11¾″ (6.35 m)	6¼ (160)	1 (30)	30°	30.2 (23.1)	187 (157)

Illinois Department of Transportation

APPROVED January 1, 2009
Ralph E. Anderson
ENGINEER OF BRIDGES AND STRUCTURES

APPROVED January 1, 2009
Eric E. Harm
ENGINEER OF DESIGN AND ENVIRONMENT

ISSUED 1-1-97

REINFORCED CONCRETE END SECTIONS
FOR PIPE CULVERTS
42″ (1050 mm) THRU 60″ (1500 mm) DIA.
SKEWED WITH ROADWAY
(Sheet 5 of 5)

STANDARD 542206-01

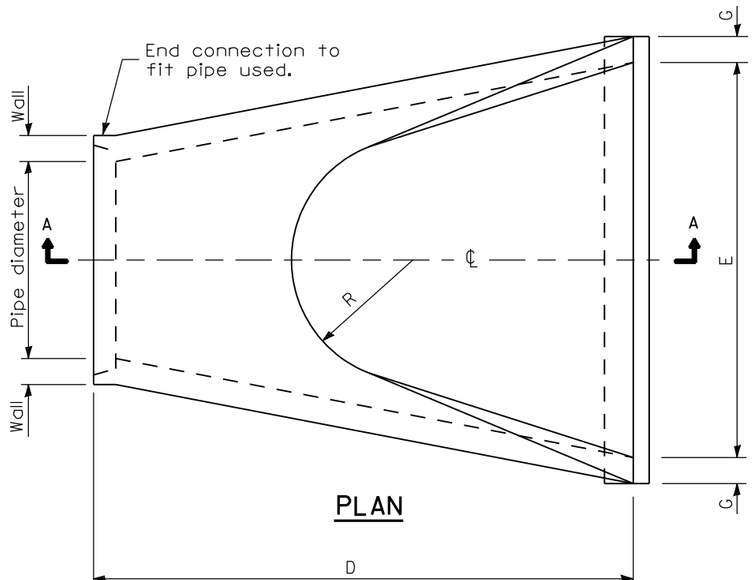

PLAN

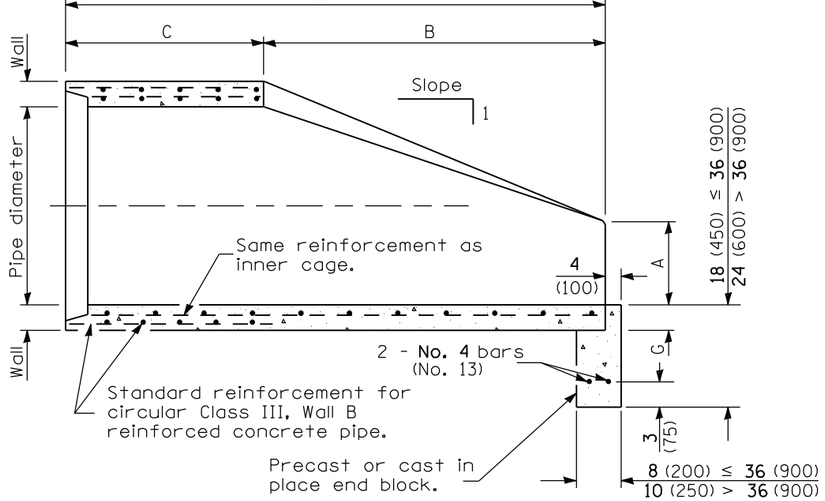

SECTION A-A

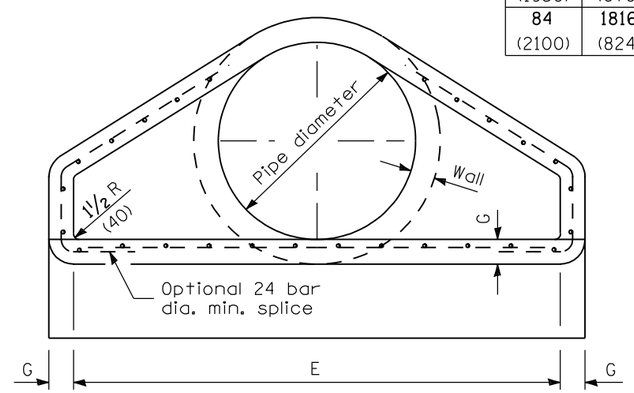

END VIEW

PIPE DIA.	APPROX. QTY. lbs. (kg)	WALL	A	B	C	D	E	G	R	APPROX. SLOPE
12 (300)	530 (240)	2 (51)	4 (102)	24 (610)	4′-0 7/8″ (1.241 m)	6′-0 7/8″ (1.851 m)	24 (610)	2 (51)	9 (229)	1:2.4
15 (375)	740 (335)	2 1/4 (57)	6 (152)	27 (686)	3′-10″ (1.168 m)	6′-1″ (1.854 m)	30 (762)	2 1/4 (57)	11 (280)	1:2.4
18 (450)	990 (450)	2 1/2 (64)	9 (229)	27 (686)	3′-10″ (1.168 m)	6′-1″ (1.854 m)	36 (914)	2 1/2 (64)	12 (305)	1:2.4
21 (525)	1280 (580)	2 3/4 (70)	9 (229)	35 (889)	38 (965)	6′-1″ (1.854 m)	3′-6″ (1.067 m)	2 3/4 (70)	13 (330)	1:2.4
24 (600)	1520 (690)	3 (76)	9 1/2 (241)	3′-7 1/2″ (1.105 m)	30 (762)	6′-1 1/2″ (1.867 m)	4′-0″ (1.219 m)	3 (76)	14 (356)	1:2.5
27 (675)	1930 (875)	3 1/4 (83)	10 1/2 (267)	4′-0″ (1.219 m)	25 1/2 (648)	6′-1 1/2″ (1.867 m)	4′-6″ (1.372 m)	3 1/4 (83)	14 1/2 (368)	1:2.4
30 (750)	2190 (995)	3 1/2 (89)	12 (305)	4′-6″ (1.375 m)	19 3/4 (502)	6′-1 3/4″ (1.874 m)	5′-0″ (1.524 m)	3 1/2 (89)	15 (381)	1:2.5
33 (825)	3200 (1450)	3 3/4 (95)	13 1/2 (343)	4′-10 1/2″ (1.486 m)	39 1/4 (997)	8′-1 3/4″ (2.483 m)	5′-6″ (1.676 m)	3 3/4 (95)	17 1/2 (445)	1:2.5
36 (900)	4100 (1860)	4 (102)	15 (381)	5′-3″ (1.6 m)	34 3/4 (883)	8′-1 3/4″ (2.483 m)	6′-0″ (1.829 m)	4 (102)	20 (508)	1:2.5
42 (1050)	5380 (2440)	4 1/2 (114)	21 (533)	5′-3″ (1.6 m)	35 (889)	8′-2″ (2.489 m)	6′-6″ (1.981 m)	4 1/2 (114)	22 (559)	1:2.5
48 (1200)	6550 (2970)	5 (127)	24 (610)	6′-0″ (1.829 m)	26 (660)	8′-2″ (2.489 m)	7′-0″ (2.134 m)	5 (127)	22 (559)	1:2.5
54 (1350)	8240 (3740)	5 1/2 (140)	27 (686)	5′-5″ (1.651 m)	35 (889)	8′-4″ (2.54 m)	7′-6″ (2.286 m)	5 1/2 (140)	24 (610)	1:2.0
60 (1500)	8730 (3960)	6 (152)	35 (889)	5′-0″ (1.524 m)	39 (991)	8′-3″ (2.515 m)	8′-0″ (2.438 m)	5 (127)	*	1:1.9
66 (1650)	10710 (4860)	6 1/2 (165)	30 (762)	6′-0″ (1.829 m)	27 (686)	8′-3″ (2.515 m)	8′-6″ (2.591 m)	5 1/2 (140)	*	1:1.7
72 (1800)	12520 (5680)	7 (178)	36 (914)	6′-6″ (1.981 m)	21 (533)	8′-3″ (2.514 m)	9′-0″ (2.743 m)	6 (152	*	1:1.8
78 (1950)	14770 (6700)	7 1/2 (191)	36 (914)	7′-6″ (2.286 m)	21 (533)	9′-3″ (2.819 m)	9′-6″ (2.896 m)	6 1/2 (165)	*	1:1.8
84 (2100)	18160 (8240)	8 (203)	36 (914)	7′-6 1/2″ (2.299 m)	21 (533)	9′-3 1/2″ (2.832 m)	10′-0″ (3.048 m)	6 1/2 (165)	*	1:1.6

* Radius as furnished by manufacturer

GENERAL NOTES

All slope ratios are expressed as units of vertical displacement to units of horizontal displacement (V:H).

All dimensions are in inches (millimeters) unless otherwise shown.

Illinois Department of Transportation

APPROVED January 1, 2009
Ralph E. Anderson
ENGINEER OF BRIDGES AND STRUCTURES

APPROVED January 1, 2009
Eric E. Harm
ENGINEER OF DESIGN AND ENVIRONMENT

ISSUED 1-1-97

DATE	REVISIONS
1-1-09	Switched units to English (metric).
1-1-07	Soft converted metric reinforcement bars.

PRECAST REINFORCED CONCRETE FLARED END SECTION

STANDARD 542301-02

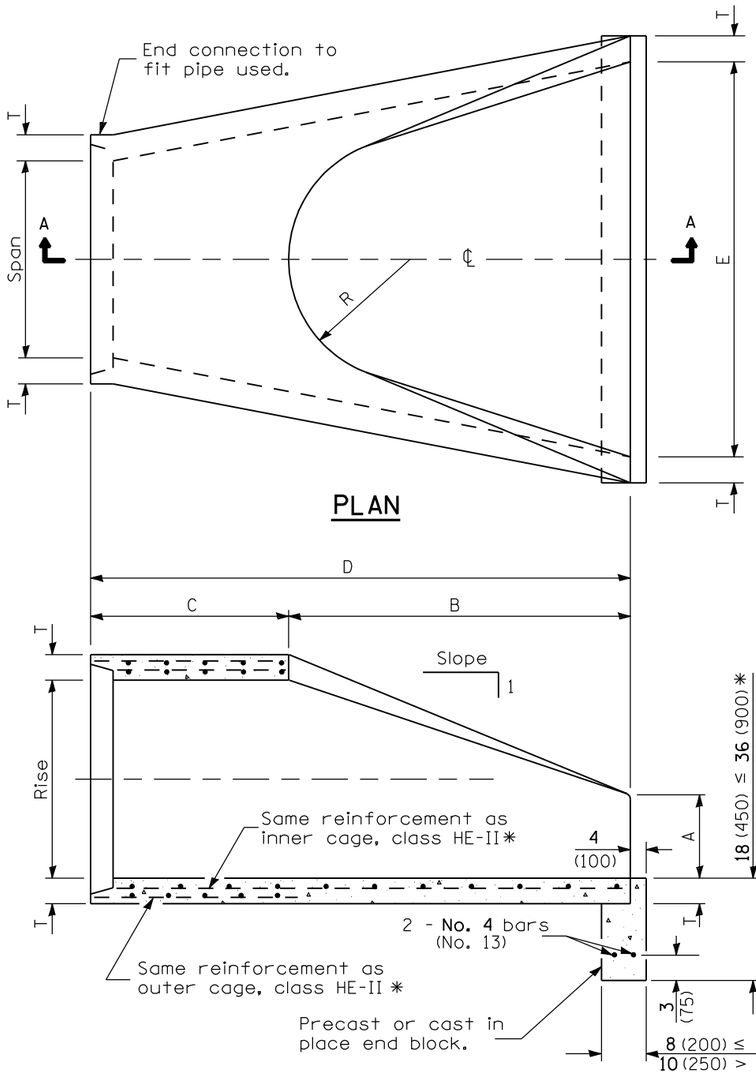

SECTION A-A

SPAN	RISE	EQUIV. DIA.	WALL T	A	B	C	D	E	H	R	R_1	R_2	APPROX. SLOPE
23 (584)	14 (356)	18 (450)	2¾ (70)	8 (203)	27 (686)	3′-9″ (1.143 m)	6′-0″ (1.829 m)	36 (914)	5⅜ (137)	6 (152)	6 (152)	20 (508)	1:3.1
30 (762)	19 (483)	24 (600)	3¼ (83)	8½ (216)	39 (991)	33 (838)	6′-0″ (1.829 m)	4′-0″ (1.219 m)	6⅞ (175)	7 (178)	8¼ (210)	26¼ (667)	1:2.8
34 (864)	22 (559)	27 (675)	3½ (89)	9 (229)	4′-0″ (1.219 m)	24 (610)	6′-0″ (1.829 m)	4′-6″ (1.372 m)	7¾ (197)	8 (203)	9¼ (235)	29¼ (743)	1:2.9
38 (965)	24 (610)	30 (750)	3½ (95)	9½ (241)	4′-6″ (1.372 m)	18 (475)	6′-0″ (1.829 m)	5′-0″ (1.524 m)	8⅝ (219)	9 (229)	10¼ (260)	32¾ (832)	1:2.9
45 (1143)	29 (737)	36 (900)	4½ (114)	11¼ (286)	5′-0″ (1.524 m)	36 (914)	8′-0″ (2.438 m)	6′-0″ (1.829 m)	10½ (267)	12 (305)	12¼ (311)	39¼ (997)	1:2.7
53 (1346)	34 (864)	42 (1050)	5 (127)	15¾ (400)	5′-0″ (1.524 m)	36 (914)	8′-0″ (2.438 m)	6′-6″ (1.981 m)	12⅛ (308)	13 (330)	14½ (368)	3′-10″ (1.168 m)	1:2.6
60 (1524)	38 (965)	48 (1200)	5½ (140)	21 (533)	5′-0″ (1.524 m)	36 (914)	8′-0″ (2.438 m)	7′-0″ (2.134 m)	13½ (343)	14 (356)	16½ (419)	4′-3½″ (1.308 m)	1:2.7
68 (1727)	43 (1092)	54 (1350)	6 (152)	26 (660)	5′-0″ (1.524 m)	36 (914)	8′-0″ (2.438 m)	7′-6″ (2.286 m)	15¼ (387)	16 (406)	18¾ (476)	4′-10½″ (1.486 m)	1:2.6
76 (1930)	48 (1219)	60 (1500)	6½ (165)	31 (787)	5′-0″ (1.524 m)	36 (914)	8′-0″ (2.438 m)	8′-0″ (2.439 m)	17 (432)	18 (457)	20¾ (527)	5′-5″ (1.651 m)	1:2.6

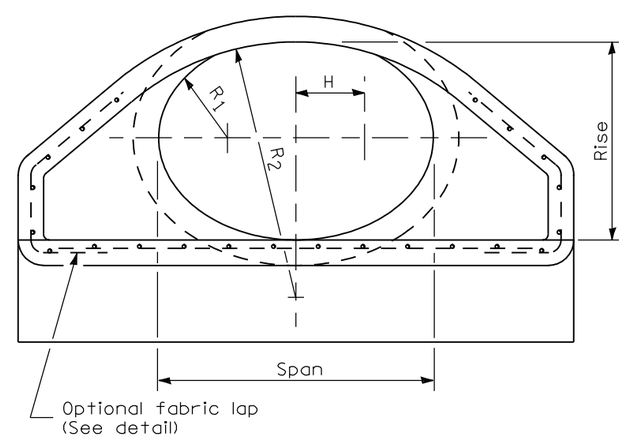

END VIEW

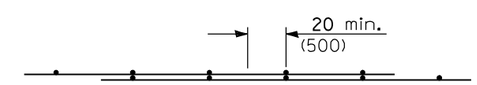

OPTIONAL FABRIC LAP

GENERAL NOTES

All slope ratios are expressed as units of vertical displacement to units of horizontal displacement (V:H).

All dimensions are in inches (millimeters) unless otherwise shown.

Illinois Department of Transportation

APPROVED January 1, 2009
Ralph E. Anderson
ENGINEER OF BRIDGES AND STRUCTURES

APPROVED January 1, 2009
Eric E. Harm
ENGINEER OF DESIGN AND ENVIRONMENT

ISSUED 1-1-97

DATE	REVISIONS
1-1-09	Switched units to English (metric).
1-1-07	Soft converted metric reinforcment bars.

PRECAST REINFORCED CONCRETE ELLIPTICAL FLARED END SECTION

STANDARD 542306–02

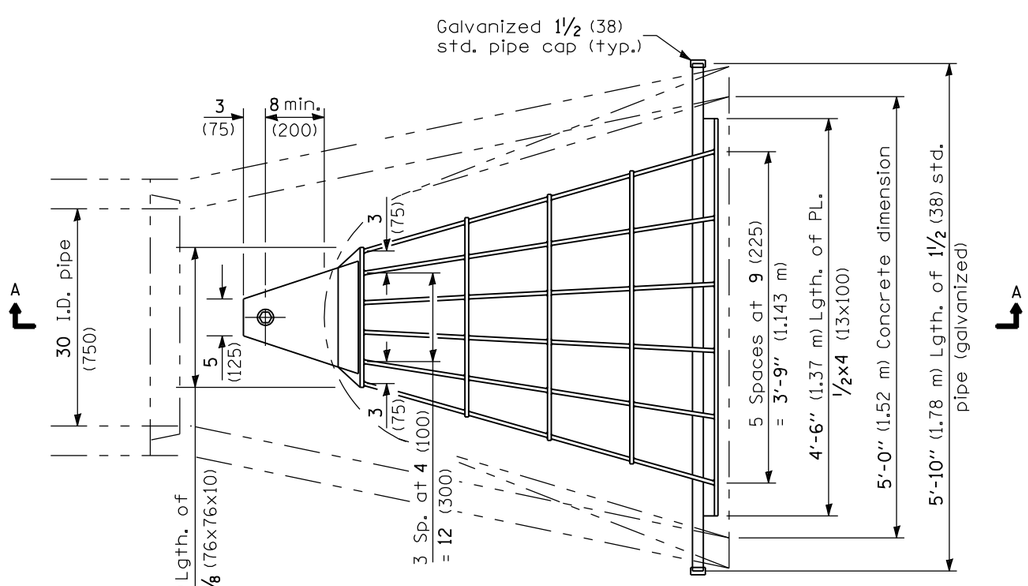

PLAN

Quantity of steel = 210 lbs. (95 kg)

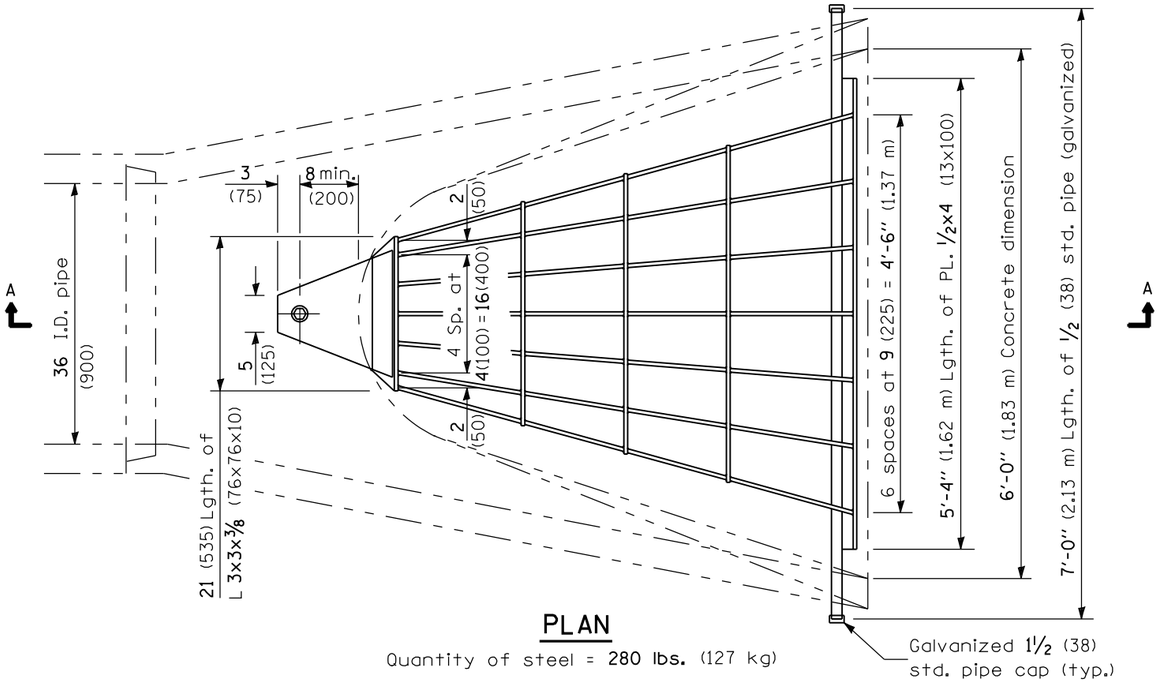

PLAN

Quantity of steel = 280 lbs. (127 kg)

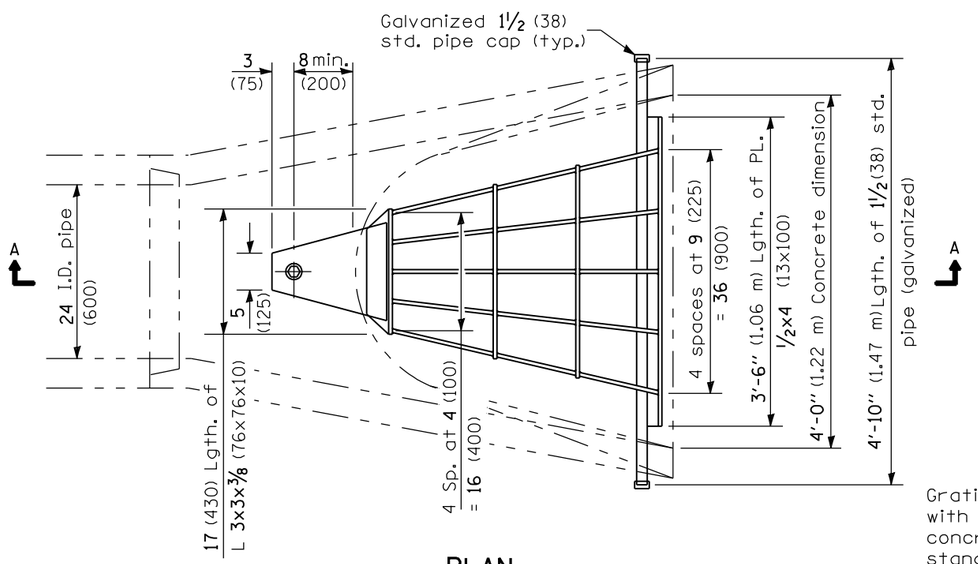

PLAN

Quantity of steel = 150 lbs. (68 kg)

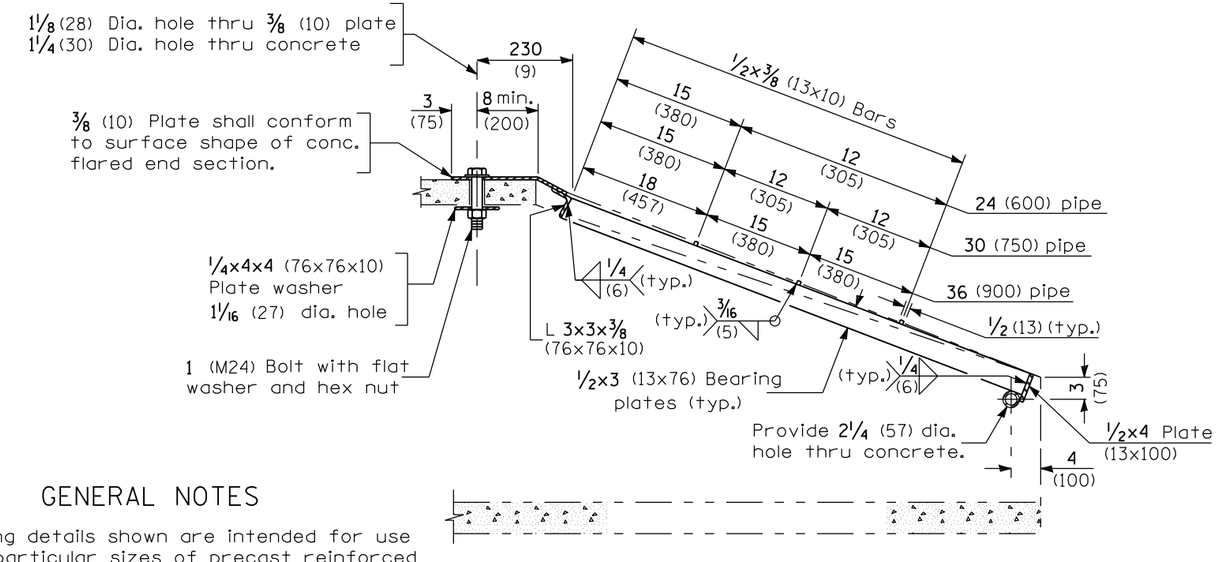

SECTION A-A

All dimensions are in inches (millimeters) unless otherwise shown.

GENERAL NOTES

Grating details shown are intended for use with particular sizes of precast reinforced concrete flared end sections as shown on standards 542301 and 542306.

Approximate quantity of steel shown includes total quantity of grating, bolts, nuts, washers and steel pipe.

Holes in the precast concrete flared end sections shall be cored to the diameters noted. If cone-out on the other end of the hole occurs, the hole shall be filled with grout to correct the diameter of the hole.

Illinois Department of Transportation

PASSED January 1, 2009
ENGINEER OF POLICY AND PROCEDURES
APPROVED January 1, 2009
ENGINEER OF DESIGN AND ENVIRONMENT

ISSUED 1-1-97

DATE	REVISIONS
1-1-09	Changed top bolt
	loc. Switched units
	to English (metric).
1-1-97	Renum. Standard 2364-3
	and Standard 2379-2.

GRATING FOR CONCRETE FLARED END SECTION (FOR 24" (600 mm) THRU 54" (1350 mm) PIPE)

(Sheet 1 of 2)

STANDARD 542311-01

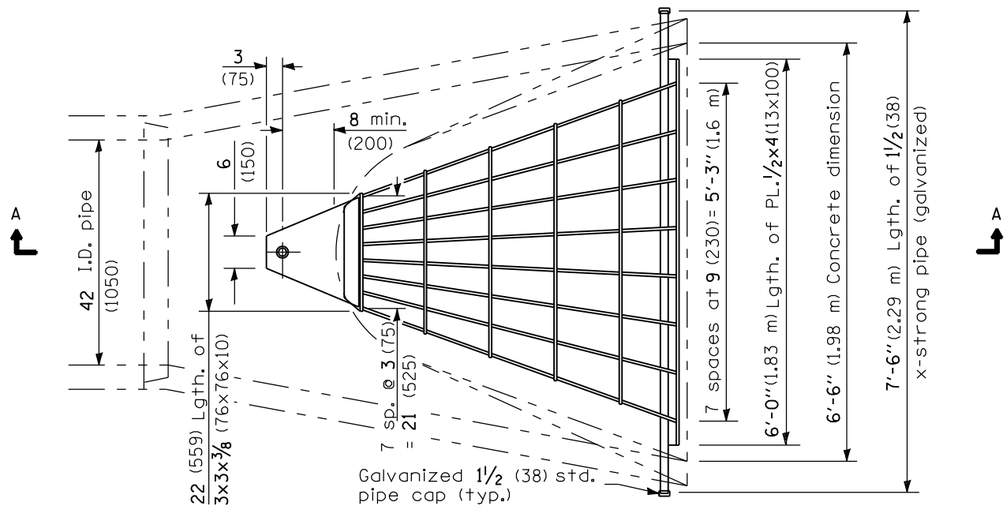

PLAN

Quantity of steel = **320 lbs.** (145 kg)

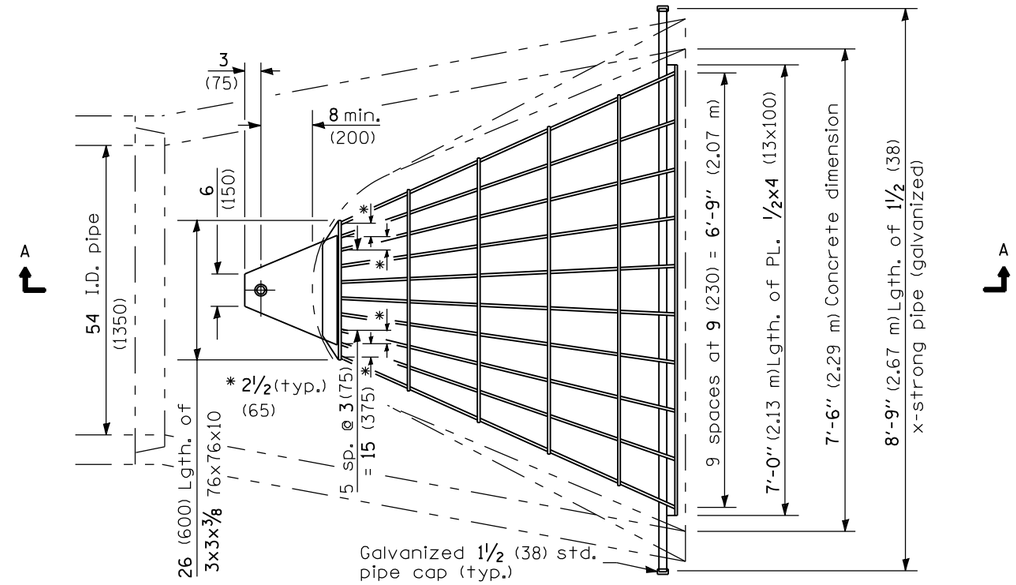

PLAN

Quantity of steel = **425 lbs.** (193 kb)

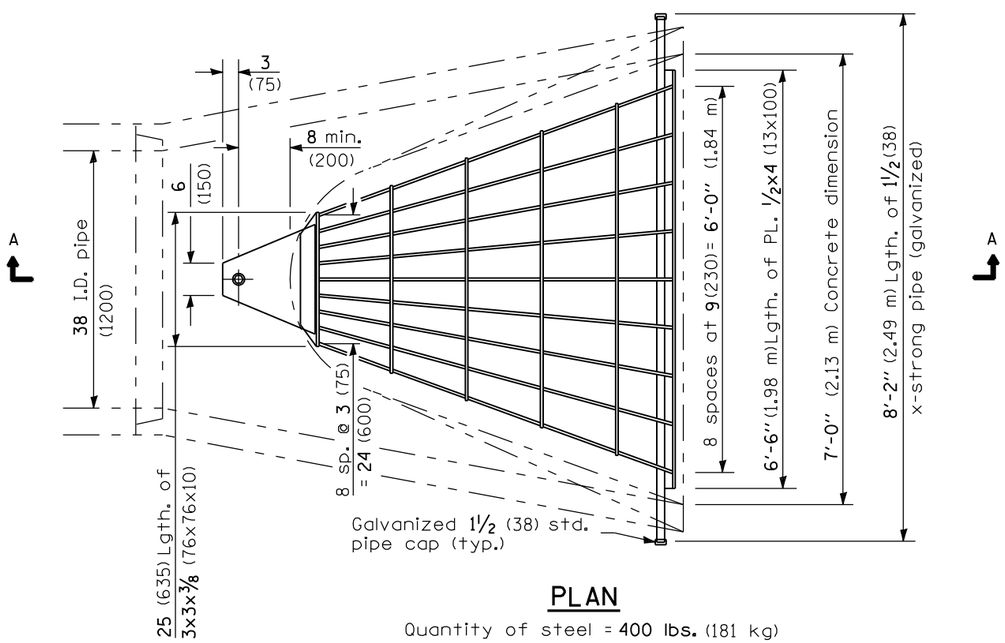

PLAN

Quantity of steel = **400 lbs.** (181 kg)

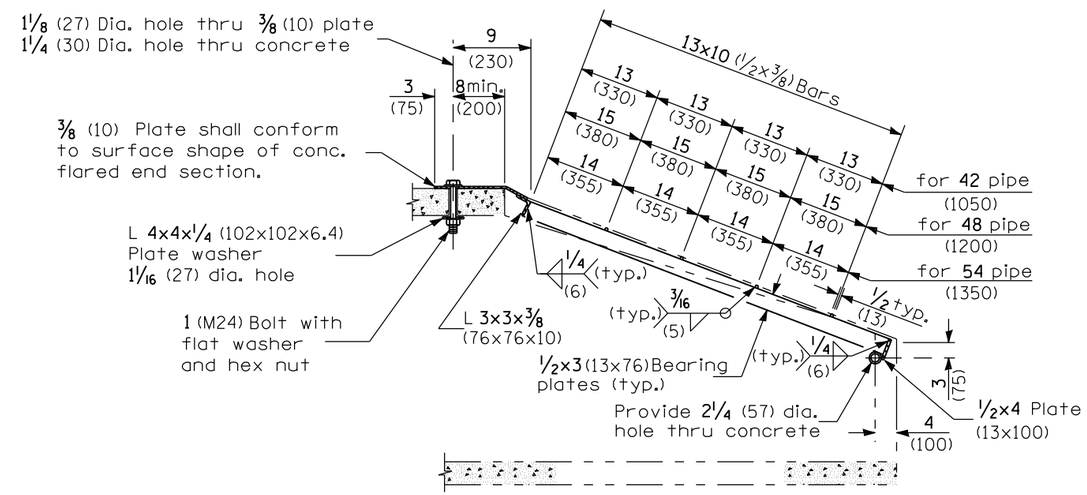

SECTION A-A

Illinois Department of Transportation

PASSED January 1, 2009

ENGINEER OF POLICY AND PROCEDURES

APPROVED January 1, 2009

ENGINEER OF DESIGN AND ENVIRONMENT

ISSUED 1-1-97

GRATING FOR CONCRETE
FLARED END SECTION
(FOR 24" (600 mm) THRU
54" (1350 mm) PIPE)
(Sheet 2 of 2)

STANDARD 542311-01

PIPE DIA.	THICK-NESS	DIMENSIONS A	B	H	L	W	SLOPE (Approx.) (V:H)	BODY
		1± (25)	(max.)	1± (25)	1½± (38)	2± (50)		
12 (300)	0.064 (1.63)	6 (150)	6 (150)	6 (150)	21 (535)	24 (610)	1:2½	1 Pc.
15 (375)	0.064 (1.63)	7 (180)	8 (205)	6 (150)	26 (660)	30 (760)	1:2½	1 Pc.
18 (450)	0.064 (1.63)	8 (205)	10 (255)	6 (150)	31 (785)	36 (915)	1:2½	1 Pc.
21 (525)	0.064 (1.63)	9 (230)	12 (305)	6 (150)	36 (915)	42 (1.065 m)	1:2½	1 Pc.
24 (600)	0.064 (1.63)	10 (255)	13 (330)	6 (150)	41 (1.040 m)	48 (1.220 m)	1:2½	1 Pc.
30 (750)	0.079 (2.01)	12 (305)	16 (405)	8 (205)	51 (1.295 m)	60 (1.525 m)	1:2½	1 Pc.
36 (900)	0.079 (2.01)	14 (355)	19 (480)	9 (230)	60 (1.525 m)	72 (1.830 m)	1:2½	2 Pc.
42 (1050)	0.109 (2.77)	16 (405)	22 (560)	11 (280)	69 (1.750 m)	84 (2.135 m)	1:2½	2 Pc.
48 (1200)	0.109 (2.77)	18 (455)	27 (685)	12 (305)	78 (1.980 m)	90 (2.285 m)	1:2¼	2 Pc.
54 (1350)	0.109 (2.77)	18 (455)	30 (760)	12 (305)	84 (2.135 m)	102 (2.590 m)	1:2	2 Pc.
60 (1500)	0.109 (2.77)	18 (455)	33 (840)	12 (305)	87 (2.210 m)	114 (2.895 m)	1:1¾	3 Pc.
66 (1650)	0.109 (2.77)	18 (455)	36 (915)	12 (305)	87 (2.210 m)	120 (3.050 m)	1:1½	3 Pc.
72 (1800)	0.109 (2.77)	18 (455)	39 (990)	12 (305)	87 (2.210 m)	126 (3.200 m)	1:1⅓	3 Pc.
78 (1950)	0.109 (2.77)	18 (455)	42 (1.065 m)	12 (305)	87 (2.210 m)	132 (3.355 m)	1:1¼	3 Pc.
84 (2250)	0.109 (2.77)	18 (455)	45 (1.145 m)	12 (305)	87 (2.210 m)	138 (3.505 m)	1:1⅙	3 Pc.

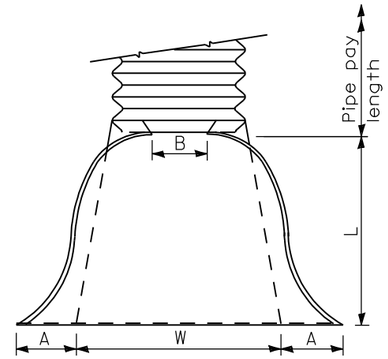

PLAN

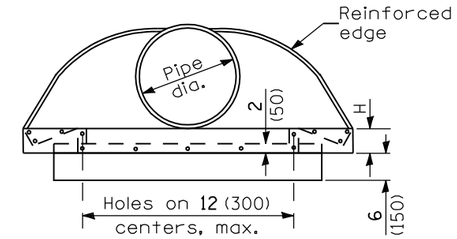

END VIEW

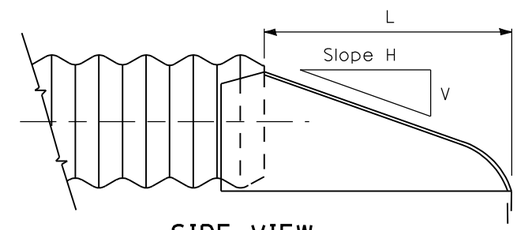

SIDE VIEW

END SECTION

NOTES

For 60 (1500) thru 84 (2250) sizes, reinforced edges shall be supplemented with stiffener angles. The angles shall be 2x2x¼ (51x51x6.4) for 60 (1500) thru 72 (1800) diameter and 2½x2½x¼ (64x64x6.4) for 78 (1950) thru 84 (2250) diameter. The angles shall be attached by ⅜ (M10) rivets or bolts.

All slope ratios are expressed as units of vertical displacement to units of horizontal displacement (V:H).

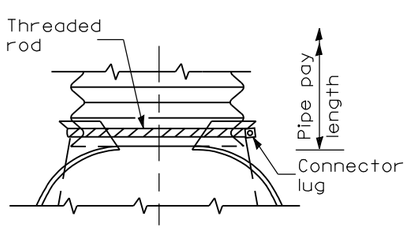

TYPE 1

For 12 (300) thru 24 (600) only (See Note 1)

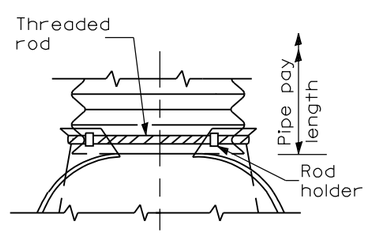

TYPE 2

For 30 (750) and 36 (900) only (See Note 1)

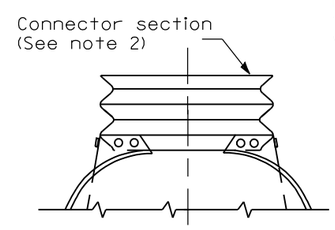

TYPE 3

(See Note 2)

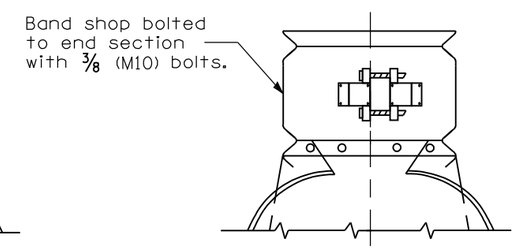

TYPE 4

(See Note 3)

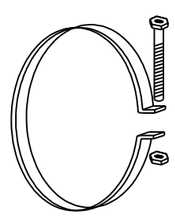

1 (25) wide, 0.109 (2.77) thick strap with standard ½x6 (M12x150) band bolt and nut.

ALTERNATE STRAP CONNECTOR

(For Type 1 only)

CONNECTIONS OF END SECTIONS

NOTES

1. Types 1 and 2 for pipes with annular ends only.
2. Type 3 connection may be used for all pipe sizes and includes 12 (300) of the pipe length. The connector section shall be attached to the end section by rivets or bolts and shall be the same metal thickness as the end section. Stub shall be either 2⅔ (68) pitch x ½ (13) depth or 3 (75) pitch x 1 (25) depth annular corrugated pipe.
3. Type 4 connection can be used for all pipe sizes. Coupler shall be 2⅔ x ½ (68x13) dimple, hugger, or annular band of 3x1 (75x25). The dimple, hugger, or annular band may be used with corrugated metal pipes having annular ends. For corrugated metal pipes having helical ends, only the dimple band will be allowed.

All dimensions are in inches (millimeters) unless otherwise shown.

Illinois Department of Transportation

PASSED January 1, 2009
ENGINEER OF POLICY AND PROCEDURES
APPROVED January 1, 2009
ENGINEER OF DESIGN AND ENVIRONMENT

ISSUED 1-1-97

DATE	REVISIONS
1-1-09	Switched units to English (metric).
1-1-97	Renum. Standard 2228-5.

METAL END SECTION FOR PIPE CULVERTS

STANDARD 542401-01

PIPE ARCH DIMENSIONS		THICK-NESS	DIMENSIONS					SLOPE (Approx.) (V:H)	BODY
			A	B	H	L	W		
SPAN	RISE		1± (25)	(max.)	1± (25)	1½± (38)	2± (50)		
17 (432)	13 (330)	0.064 (1.63)	7 (180)	9 (230)	6 (150)	19 (485)	30 (760)	1:2½	1 Pc.
21 (533)	15 (381)	0.064 (1.63)	7 (180)	10 (255)	6 (150)	23 (585)	36 (915)	1:2½	1 Pc.
24 (610)	18 (457)	0.064 (1.63)	8 (205)	12 (305)	6 (150)	28 (710)	42 (1.065 m)	1:2½	1 Pc.
28 (711)	20 (508)	0.064 (1.63)	9 (230)	14 (355)	6 (150)	32 (815)	48 (1.220 m)	1:2½	1 Pc.
35 (889)	24 (610)	0.064 (1.63)	10 (255)	16 (405)	6 (150)	39 (990)	60 (1.525 m)	1:2½	1 Pc.
42 (42)	29 (737)	0.064 (1.63)	12 (305)	18 (460)	8 (205)	53 (1.170 m)	75 (1.905 m)	1:2½	1 Pc.
49 (1245)	33 (838)	0.109 (2.77)	13 (330)	21 (535)	9 (230)	46 (1.345 m)	85 (2.160 m)	1:2½	2 Pc.
57 (1448)	38 (965)	0.109 (2.77)	18 (460)	26 (660)	12 (305)	63 (1.600 m)	90 (2.285 m)	1:2½	2 Pc.
64 (1626)	43 (1092)	0.109 (2.77)	18 (460)	30 (760)	12 (305)	70 (1.780 m)	102 (2.590 m)	1:2¼	2 Pc.
71 (1803)	47 (1194)	0.109 (2.77)	18 (460)	33 (840)	12 (305)	77 (1.955 m)	114 (2.895 m)	1:2¼	3 Pc.
77 (1956)	52 (1321)	0.109 (2.77)	18 (460)	36 (915)	12 (305)	77 (1.955 m)	126 (3.200 m)	1:2	3 Pc.
83 (2108)	57 (1448)	0.109 (2.77)	18 (460)	39 (990)	12 (305)	77 (1.955 m)	138 (3.505 m)	1:2	3 Pc.

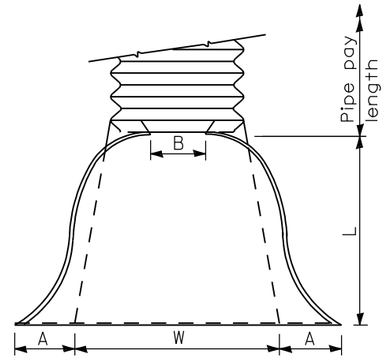

PLAN

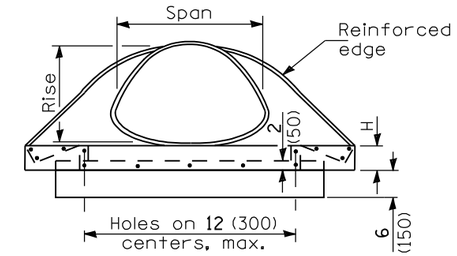

END VIEW

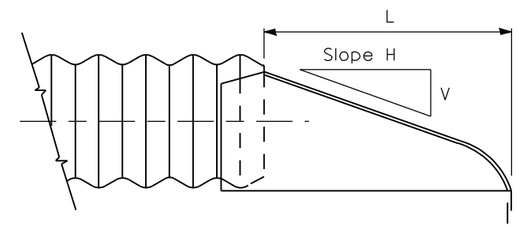

SIDE VIEW

END SECTION

NOTES

For the 77x52 (1956x1321) and 83x57 (2108x1448) sizes, reinforced edges shall be supplemented with 2x2x¼ (51x51x6.4) stiffener angles. The angles shall be attached by ⅜ (M10) rivets or bolts.

Angle reinforcement shall be placed under the center panel seams on the 77x52 (1956x1321) and 83x57 (2108x1448) sizes.

All slope ratios are expressed as units of vertical displacement to units of horizontal displacement (V:H).

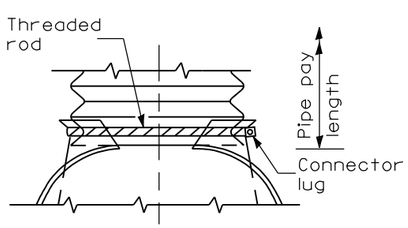

TYPE 1

For 17x13 (432x330) thru 28x20 (711x508) only (See Note 1)

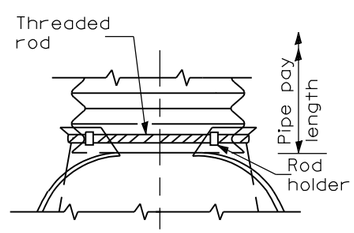

TYPE 2

For 17x13 (432x330) thru 57x38 (1448x965) only (See Note 1)

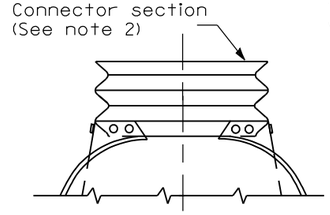

TYPE 3

(See Note 2)

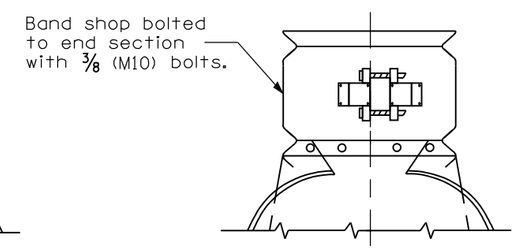

TYPE 4

(See Note 3)

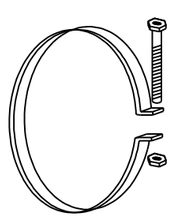

1 (25) wide, 0.109 (2.77) thick strap with standard ½x6 (M12x150) band bolt and nut.

ALTERNATE STRAP CONNECTOR

(For Type 1 only)

CONNECTIONS OF END SECTIONS

NOTES

1. Type 1 and 2 connection shall be used only with pipes with annular ends.
2. Type 3 connection can be used with all pipe arch sizes and includes 12 (300) of the pipe length. The annular connector section shall be attached to the end section by rivets or bolts and shall be the same metal thickness as the end section. When coupling the type 3 end section to a pipe with helical ends, only the dimple type coupling band shall be used.
3. Type 4 connection can be used with all pipe arch sizes. The end section band shall be either a dimple, hugger, or annular band and can be used with pipes having annular ends. For pipes having helical ends, only the dimple end section band will be allowed.

All dimensions are in inches (millimeters) unless otherwise shown.

Illinois Department of Transportation

PASSED January 1, 2009
ENGINEER OF POLICY AND PROCEDURES
APPROVED January 1, 2009
ENGINEER OF DESIGN AND ENVIRONMENT

ISSUED 1-1-97

DATE	REVISIONS
1-1-09	Switched units to English (metric).
1-1-97	Renum. Standard 2229-6.

METAL END SECTIONS FOR PIPE ARCHES

STANDARD 542406-01

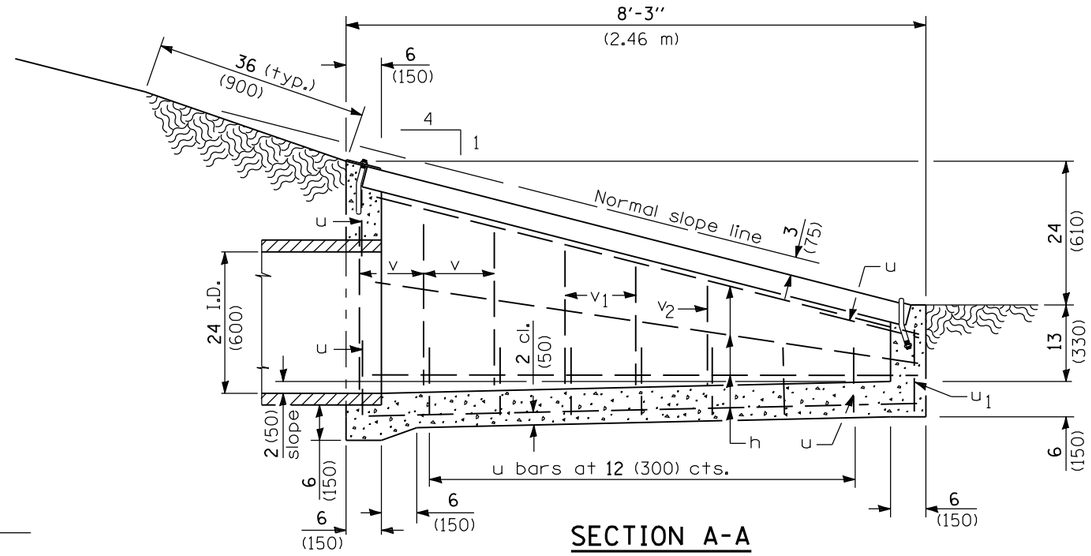

SECTION A-A

Material required for one inlet box

Bar	Qty.	Size	Length
h	10	No. 4 (No. 13)	7'-9" (2.35 m)
u	10	No. 4 (No. 13)	6'-3" (1.90 m)
u_1	1	No. 4 (No. 13)	5'-8" (1.70 m)
v	6	No. 4 (No. 13)	30 (760)
v_1	4	No. 4 (No. 13)	24 (610)
v_2	2	No. 4 (No. 13)	18 (460)
Galv. Steel Pipe		3½ O.D. (89)	8'-0" (2.38 m)
Concrete		cu. yds. (m^3)	1.2 (0.9)
Reinf. Bars		lbs. (kg)	115 (52.2)

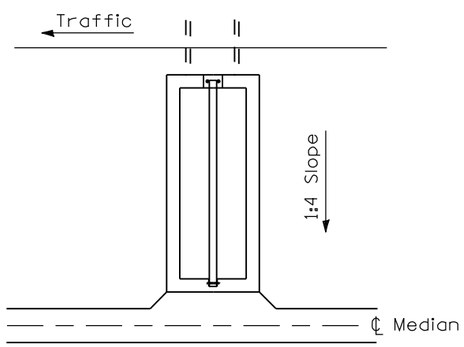

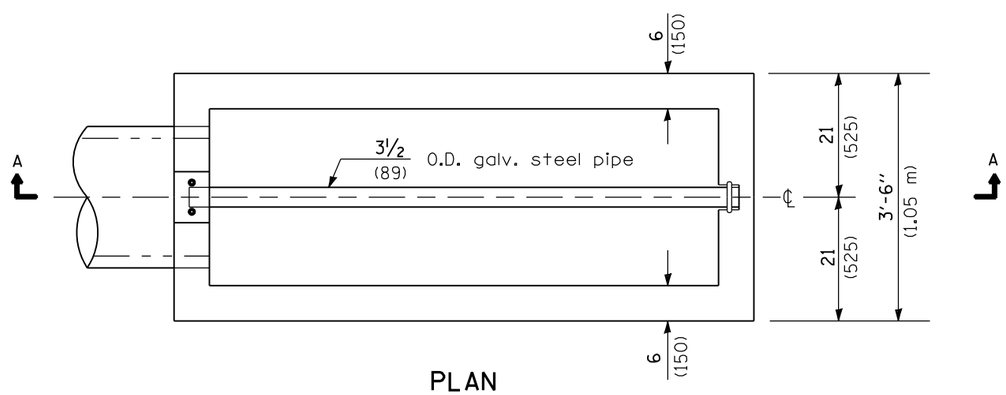

PLAN

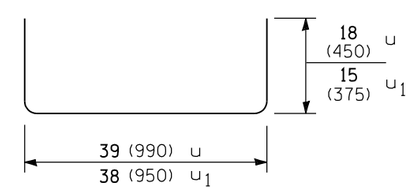

Bars u & u_1

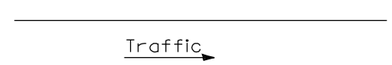

Sketch showing location and direction of box in relation to ℄ median.

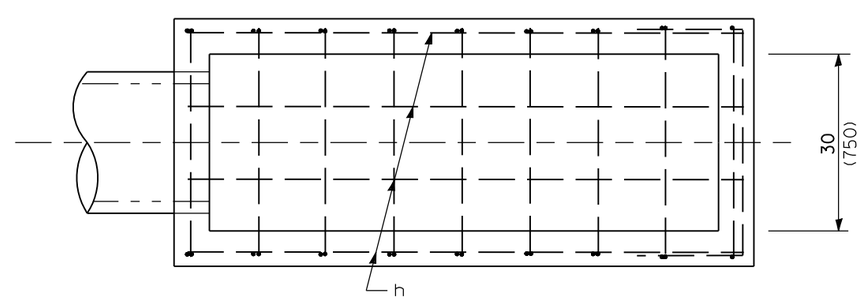

PLAN OF REINFORCEMENT

GENERAL NOTES

All slope ratios are expressed as units of vertical displacement to units of horizontal displacement (V:H).

All dimensions are in inches (millimeters) unless otherwise shown.

Illinois Department of Transportation

PASSED January 1, 2009
ENGINEER OF POLICY AND PROCEDURES

APPROVED January 1, 2009
ENGINEER OF DESIGN AND ENVIRONMENT

ISSUED 1-1-97

DATE	REVISIONS
1-1-09	Switched units to English (metric).
1-1-07	Soft converted metric reinforcement bars.

INLET BOX TYPE 24 (600) A

(Sheet 1 of 2)

STANDARD 542501-02

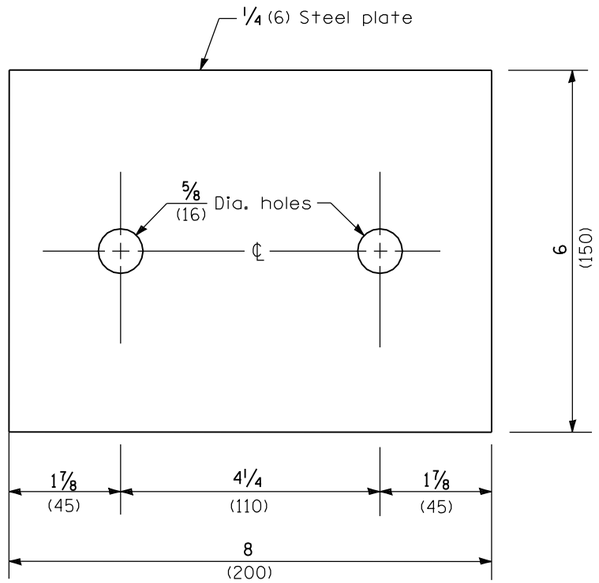

TOP ANCHOR PLATE

(1 - required)

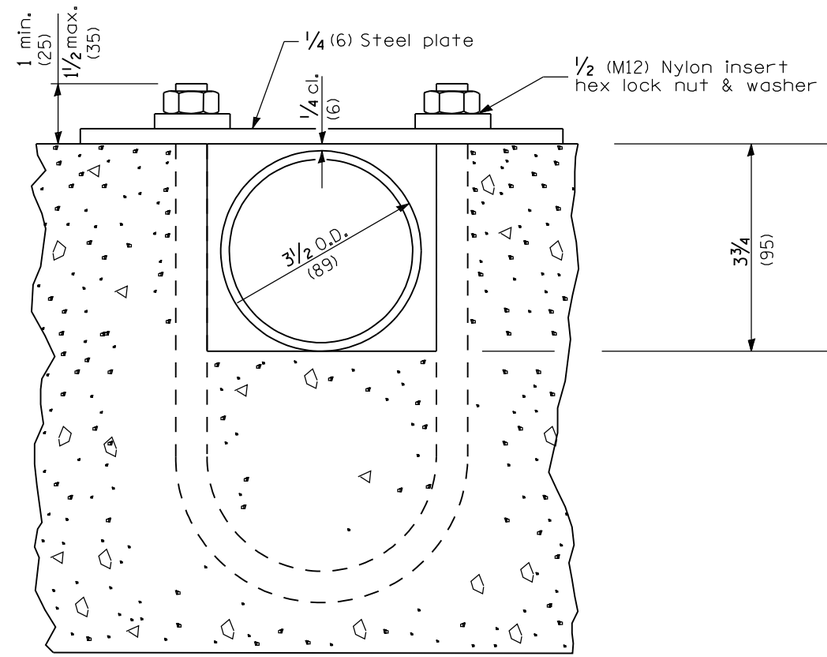

SECTION B-B

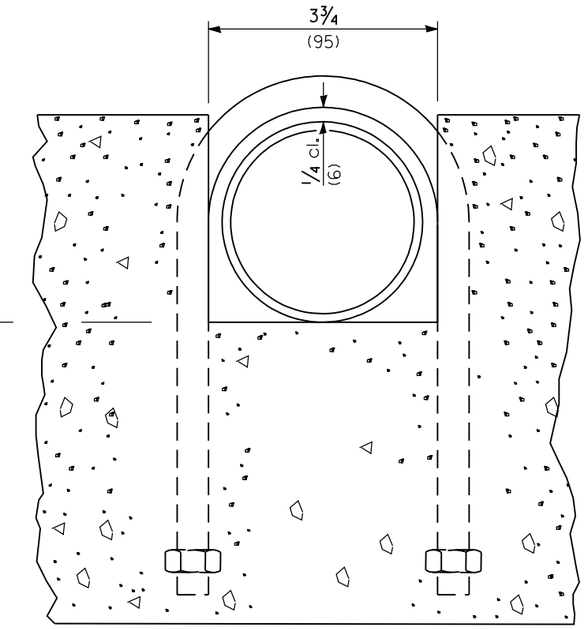

SECTION C-C

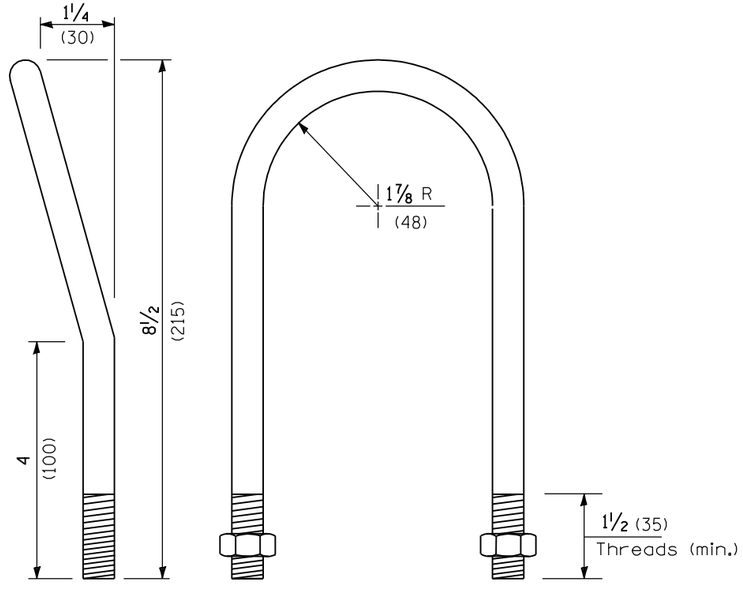

1/2 (M12) U BOLT

(2 - required)

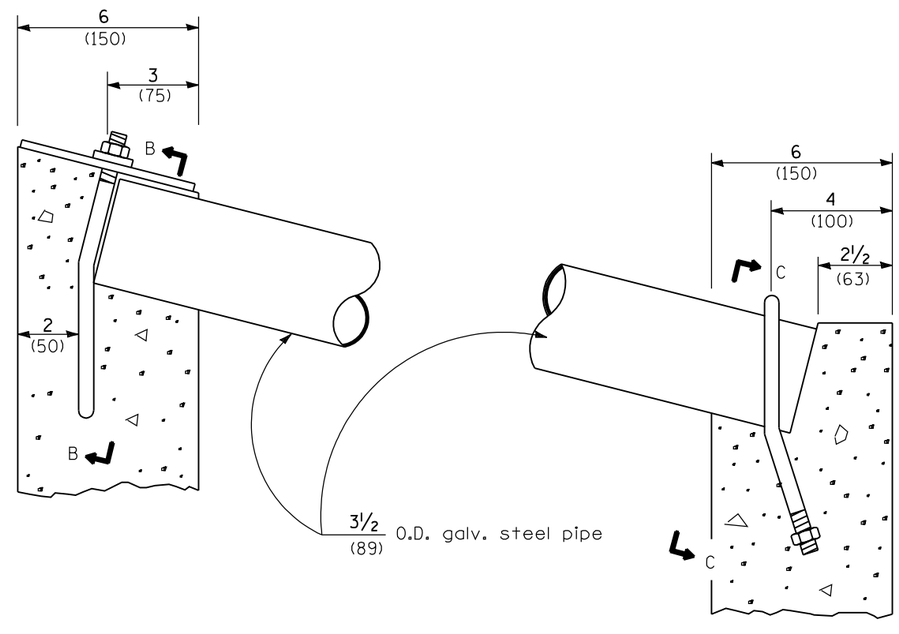

DETAIL AT BLOCKOUTS

Illinois Department of Transportation

PASSED January 1, 2009

ENGINEER OF POLICY AND PROCEDURES

APPROVED January 1, 2009

ENGINEER OF DESIGN AND ENVIRONMENT

ISSUED 1-1-97

INLET BOX TYPE 24 (600) A

(Sheet 2 of 2)

STANDARD 542501-02

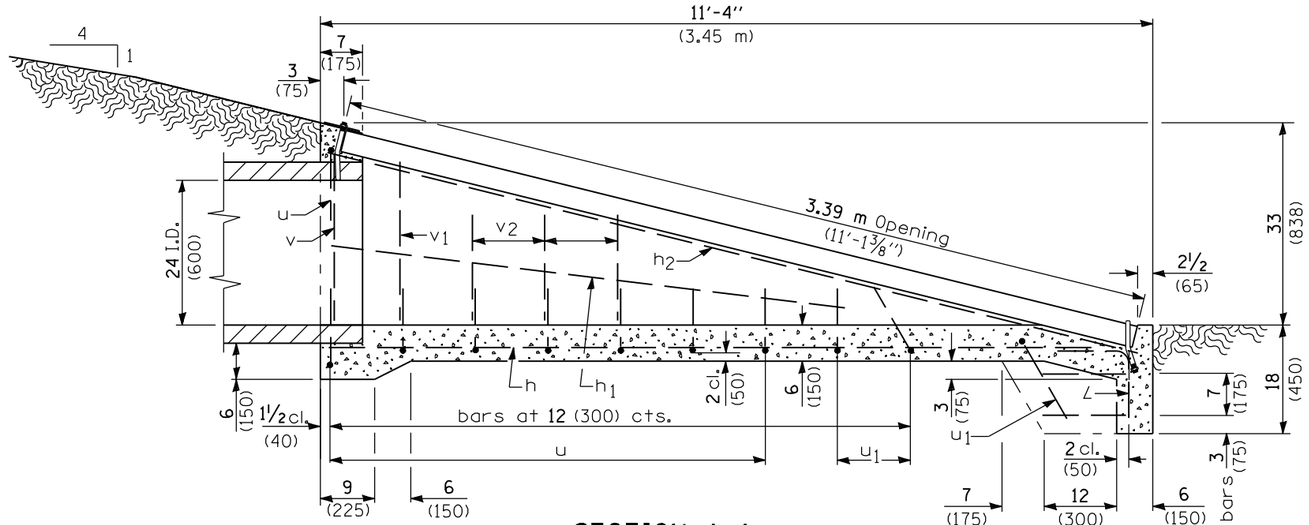

SECTION A-A

Material required for one inlet box

Bar	Qty.	Size	Length
h	4	No. 4 (No. 13)	11'-0" (3.35 m)
h_1	2	No. 4 (No. 13)	8'-0" (2.45 m)
h_2	2	No. 4 (No. 13)	11'-4" (3.45 m)
L	4	No. 4 (No. 13)	2'-0" (0.60 m)
u	8	No. 4 (No. 13)	6'-5" (1.95 m)
u_1	3	No. 4 (No. 13)	5'-11" (1.80 m)
u_2	2	No. 4 (No. 13)	5'-10" (1.75 m)
v	2	No. 4 (No. 13)	30 (760)
v_1	2	No. 4 (No. 13)	27 (680)
v_2	6	No. 4 (No. 13)	18 (460)
Concrete		cu. yds. (m^3)	1.6 (1.2)
Reinf. Bars		lbs. kg	127 (57.6)
Galv. Steel Pipe		3 1/2 (89) O.D.	11'-1 1/8" (3.37 m)

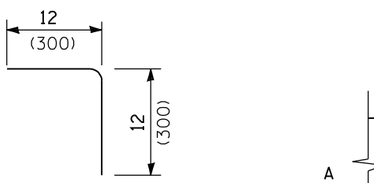

Bar L

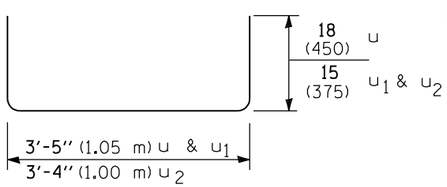

Bars u, u_1 & u_2

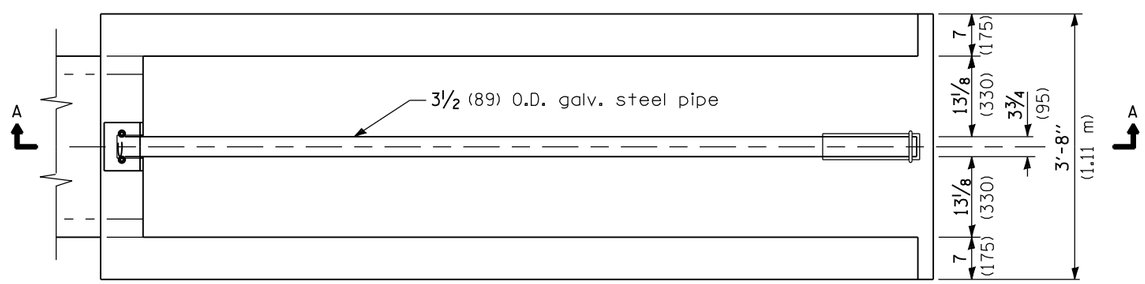

PLAN

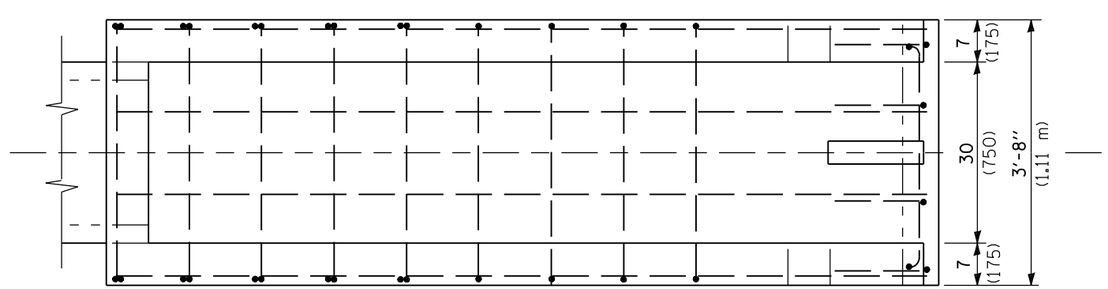

PLAN OF REINFORCEMENT

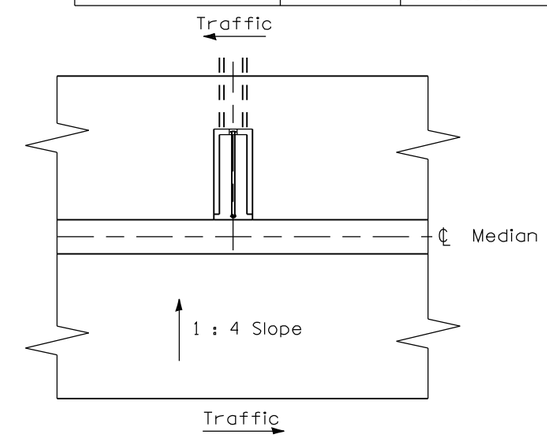

Sketch showing location and direction of box in relation to ℄ median.

GENERAL NOTES

All slope ratios are expressed as units of vertical displacement to units of horizontal displacement (V:H).

All dimensions are in inches (millimeters) unless otherwise shown.

Illinois Department of Transportation

PASSED January 1, 2009
ENGINEER OF POLICY AND PROCEDURES
APPROVED January 1, 2009
ENGINEER OF DESIGN AND ENVIRONMENT

ISSUED 1-1-97

DATE	REVISIONS
1-1-09	Switched units to English (metric).
1-1-07	Soft converted metric reinforcement bars.

INLET BOX TYPE 24 (600) B

(Sheet 1 of 2)

STANDARD 542506-02

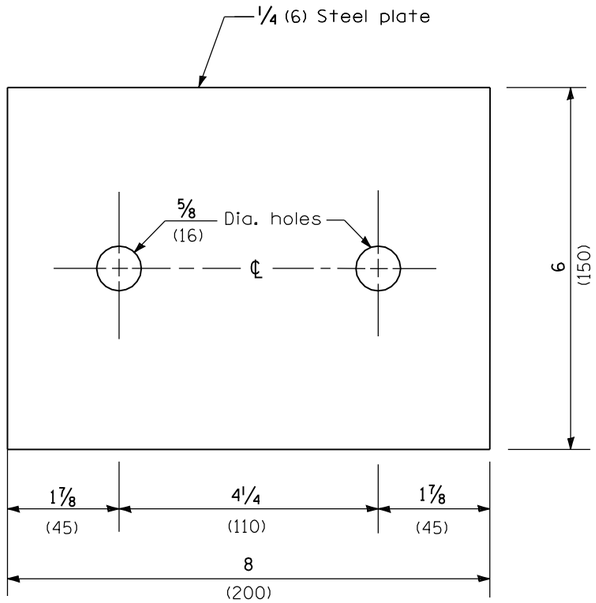

TOP ANCHOR PLATE

(1 - required)

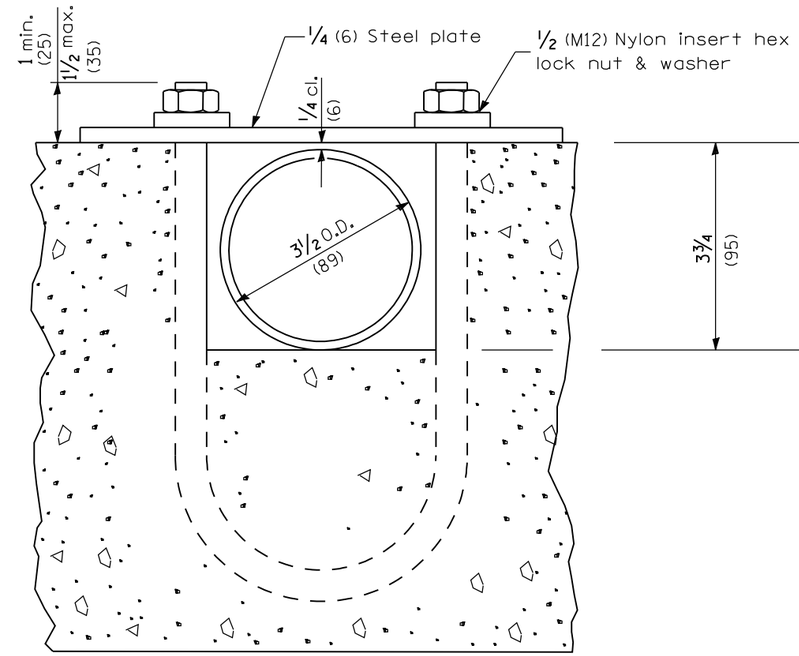

SECTION B-B

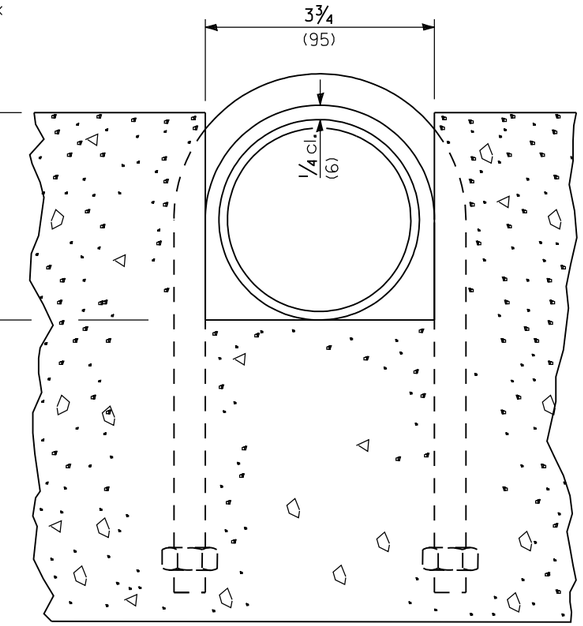

SECTION C-C

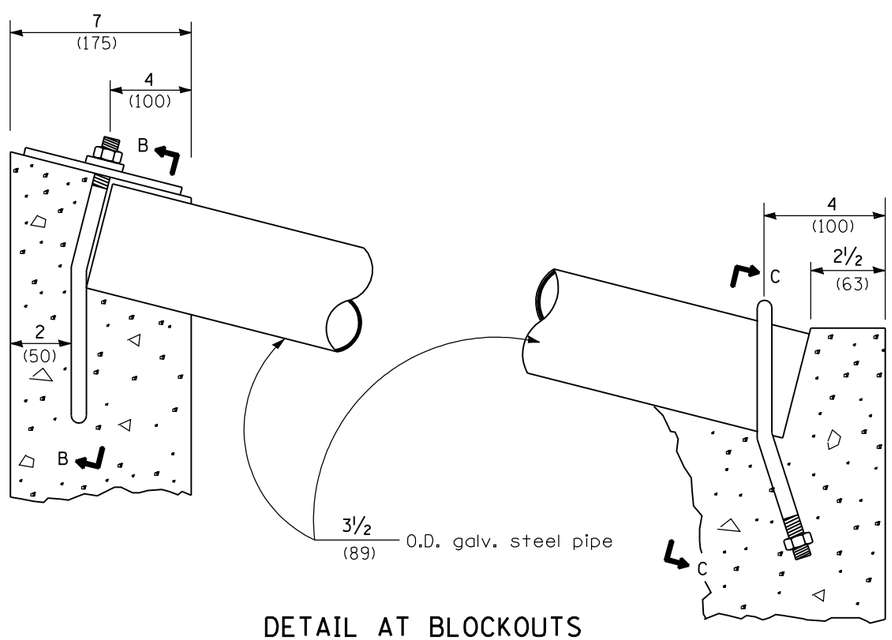

DETAIL AT BLOCKOUTS

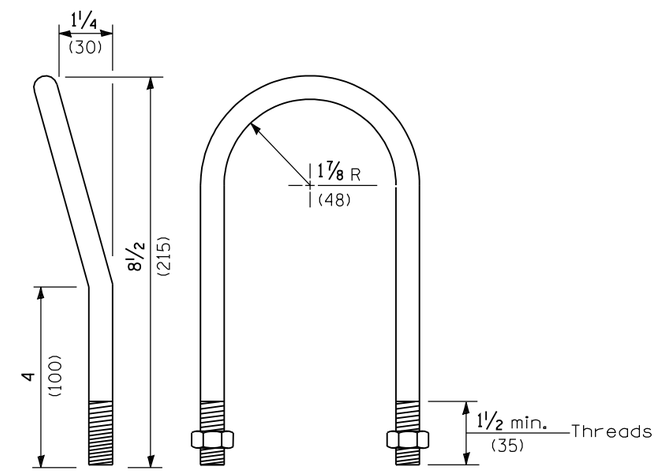

1/2 (M12) U BOLT

(2 - required)

Illinois Department of Transportation

PASSED January 1, 2009

ENGINEER OF POLICY AND PROCEDURES

APPROVED January 1, 2009

ENGINEER OF DESIGN AND ENVIRONMENT

ISSUED 1-1-97

INLET BOX
TYPE 24 (600) B

(Sheet 2 of 2)

STANDARD 542506-02

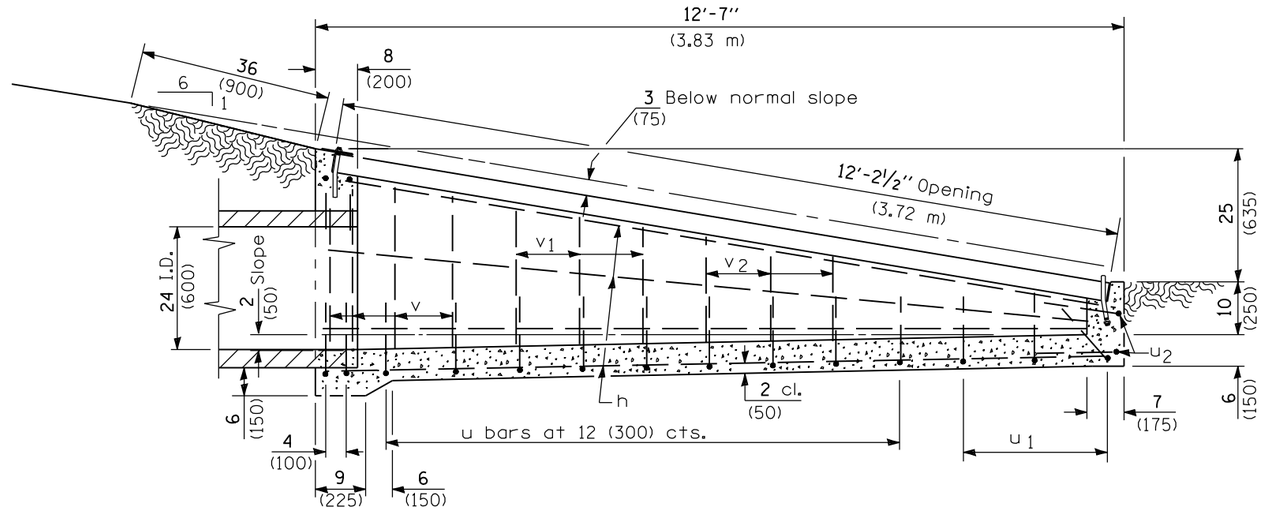

SECTION A-A

Material required for one inlet box

Bar	Qty.	Size	Length
h	10	No. 4 (No. 13)	12'-0" (3.65 m)
u	13	No. 4 (No. 13)	6'-5" (1.95 m)
u_1	3	No. 4 (No. 13)	5'-11" (1.80 m)
u_2	2	No. 4 (No. 13)	5'-10" (1.75 m)
v	8	No. 4 (No. 13)	30 (760)
v_1	6	No. 4 (No. 13)	24 (610)
v_2	6	No. 4 (No. 13)	18 (460)
Concrete		cu. yds. (m^3)	1.9 (1.45)
Reinf. Bars		lbs. (kg)	83 (183)
Galv. Steel Pipe		3½ O.D. (89)	12'-2¼" (3.71 m)

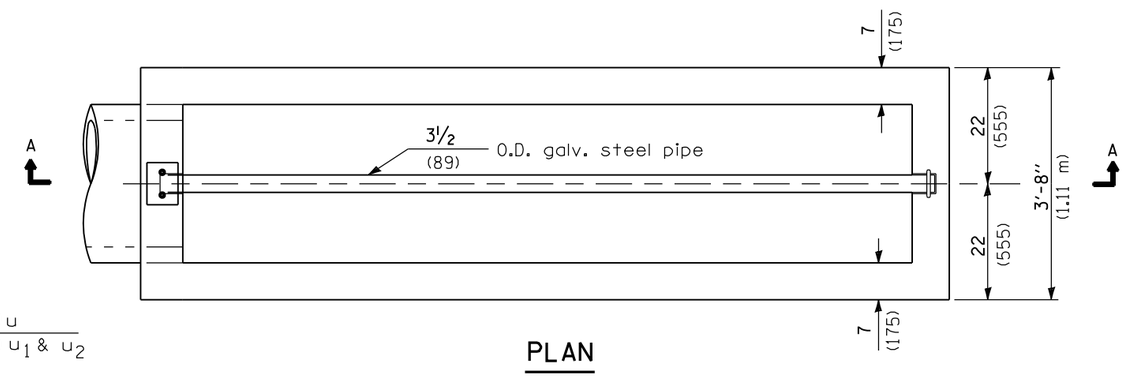

PLAN

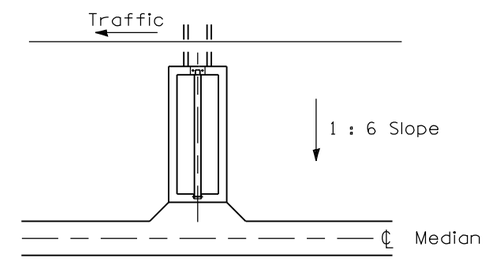

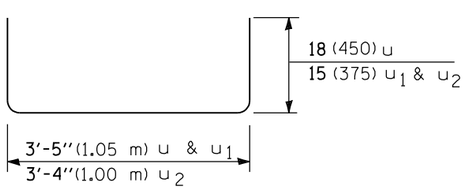

Bars u, u_1 & u_2

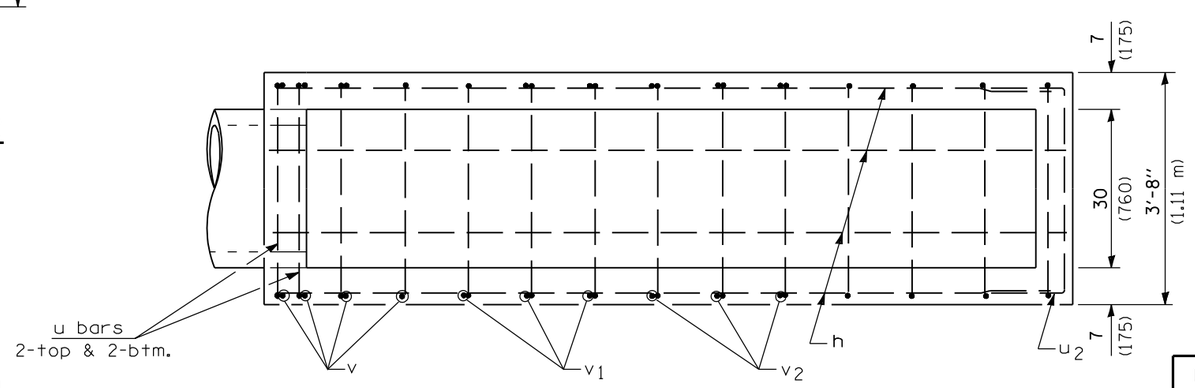

PLAN OF REINFORCEMENT

Sketch showing location and direction of box in relation to ℄ median.

GENERAL NOTES

All slope ratios are expressed as units of vertical displacement to units of horizontal displacement (V:H).

All dimensions are in inches (millimeters) unless otherwise shown.

Illinois Department of Transportation

PASSED January 1, 2009
ENGINEER OF POLICY AND PROCEDURES

APPROVED January 1, 2009
ENGINEER OF DESIGN AND ENVIRONMENT

ISSUED 1-1-97

DATE	REVISIONS
1-1-09	Switched units to English (metric).
1-1-07	Soft converted metric reinforcement bars.

INLET BOX TYPE 24 (600) C

(Sheet 1 of 2)

STANDARD 542511-02

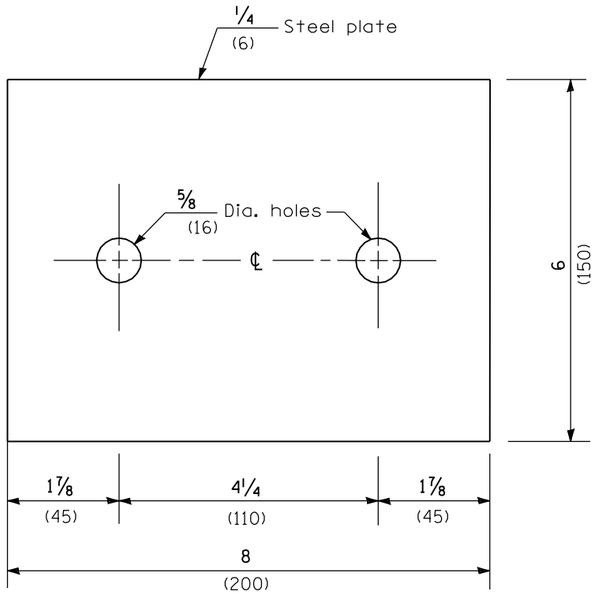

TOP ANCHOR PLATE

(1 - required)

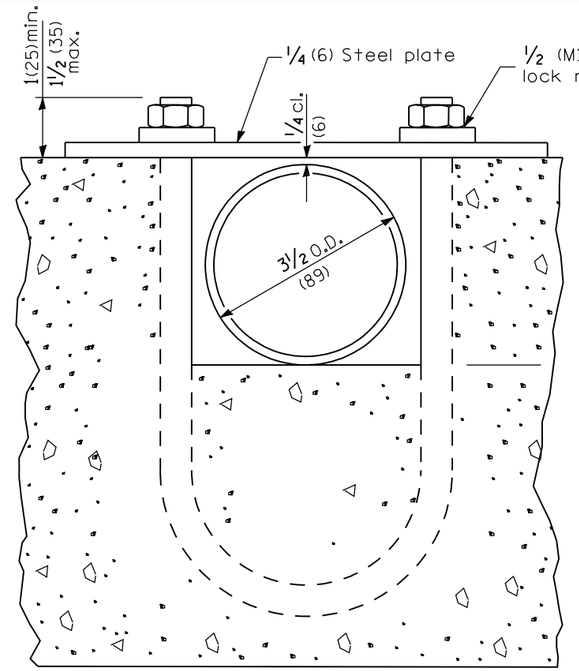

SECTION B-B

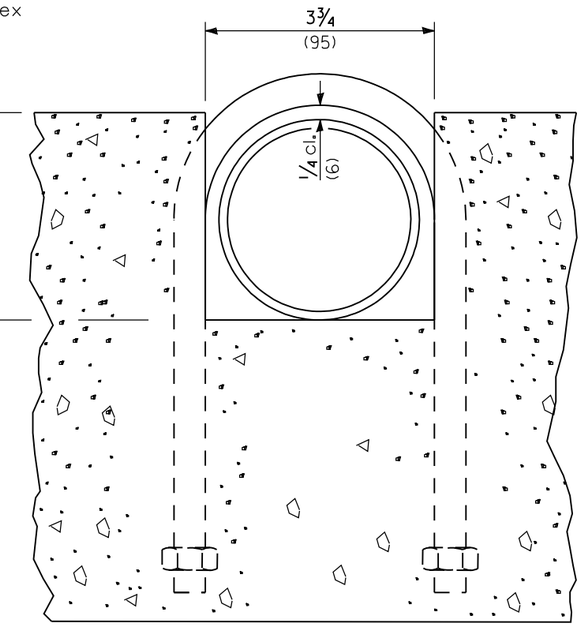

SECTION C-C

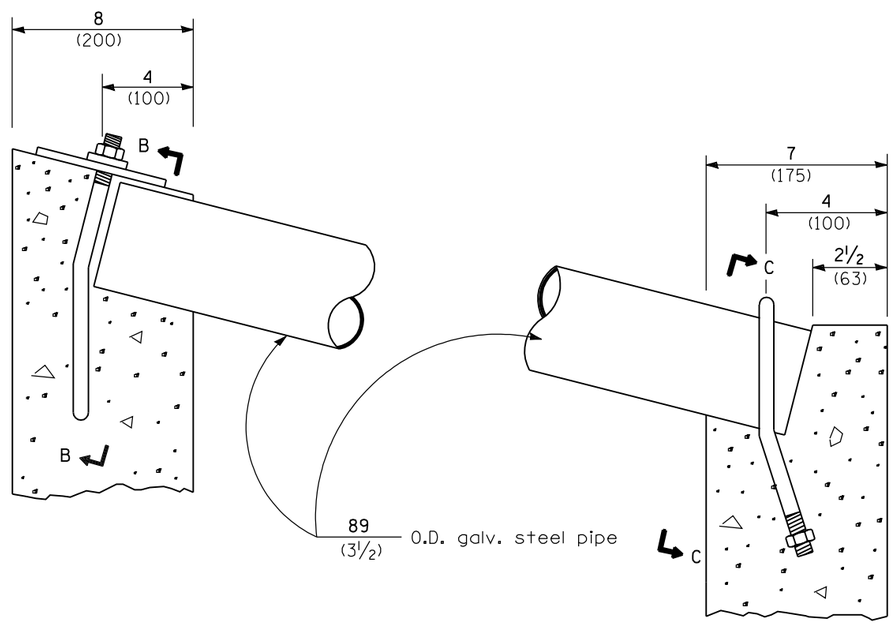

DETAIL AT BLOCKOUTS

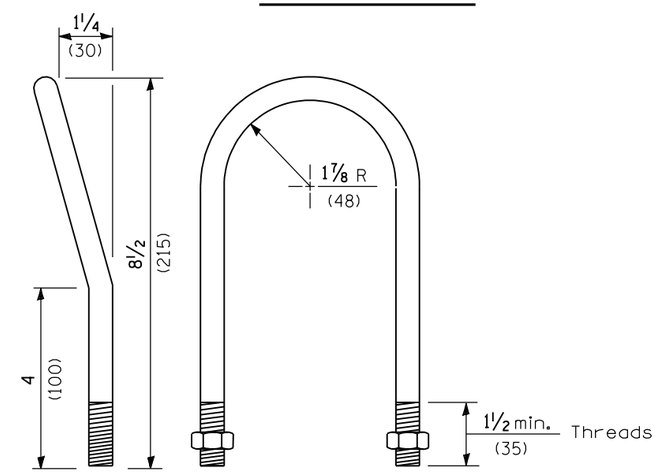

1/2 (M12) U BOLT

(2 - required)

Illinois Department of Transportation

PASSED January 1, 2009

ENGINEER OF POLICY AND PROCEDURES

APPROVED January 1, 2009

ENGINEER OF DESIGN AND ENVIRONMENT

ISSUED 1-1-97

INLET BOX TYPE 24 (600) C

(Sheet 2 of 2)

STANDARD 542511-02

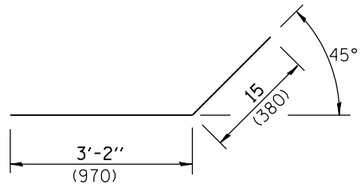

Bar h_1

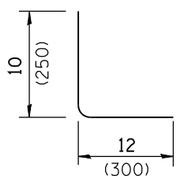

Bar L

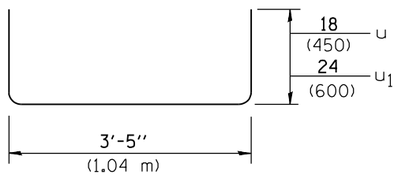

Bar u & u_1

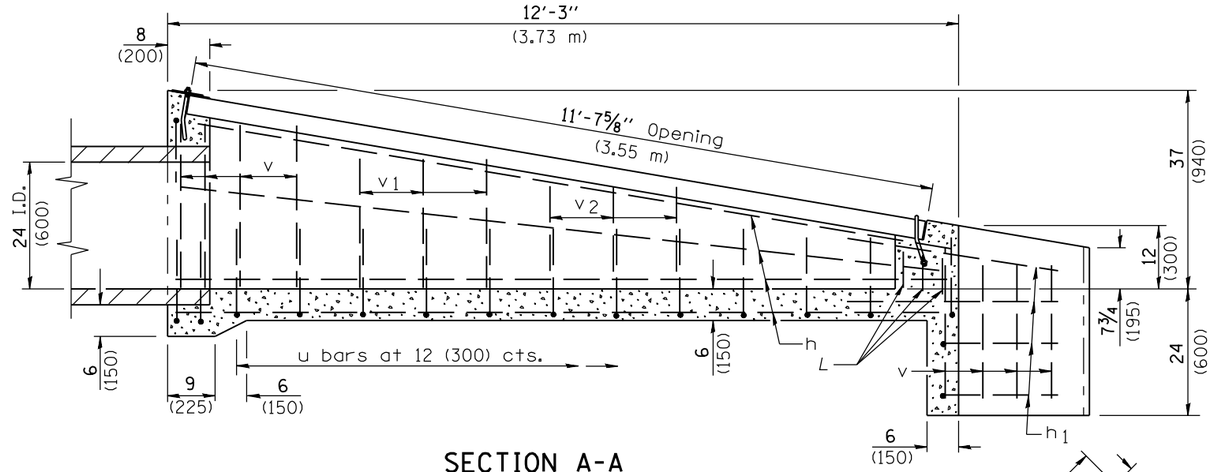

SECTION A-A

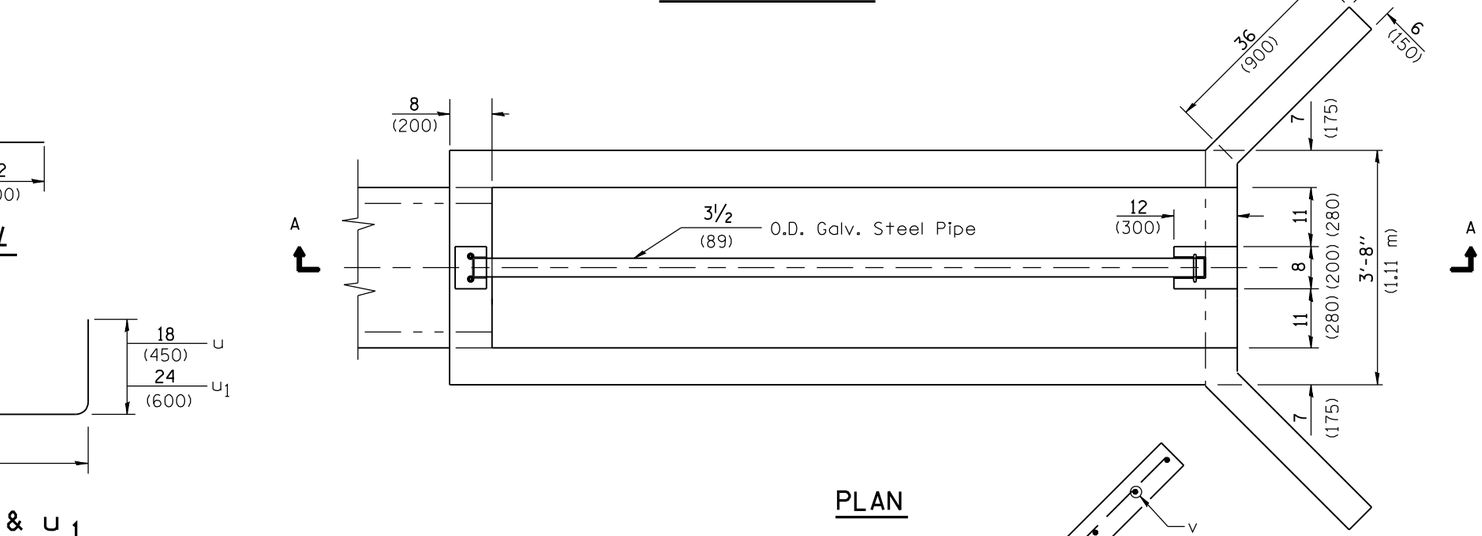

PLAN

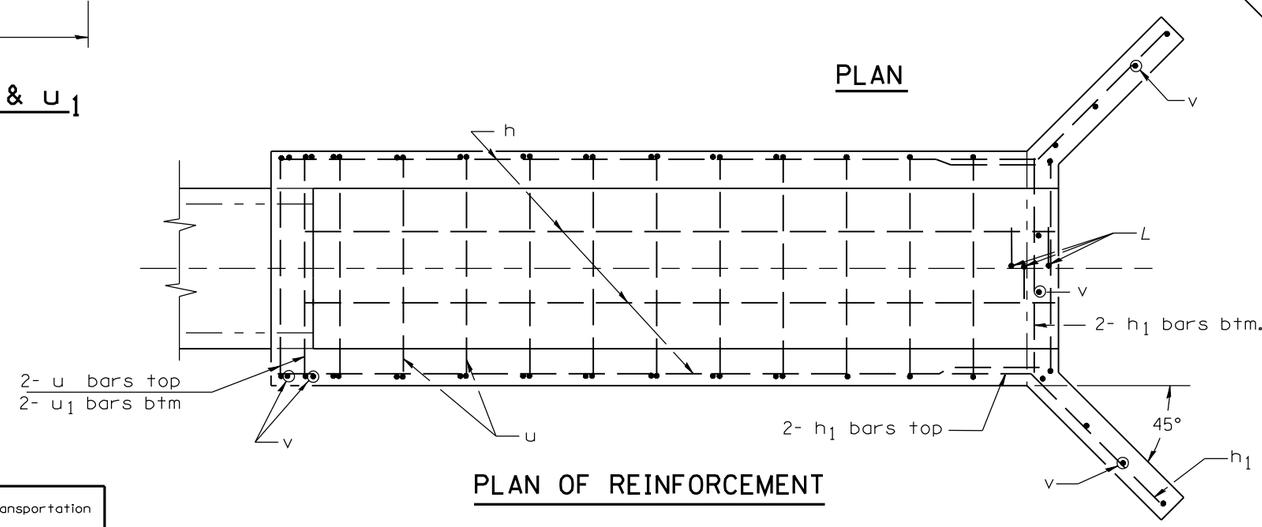

PLAN OF REINFORCEMENT

Material required for one inlet box

Bar	Qty.	Size	Length
h	10	No. 4 (No. 13)	12'-0" (3.66 m)
h_1	8	No. 4 (No. 13)	4'-5" (1.35 m)
L	3	No. 4 (No. 13)	22 (550)
u	14	No. 4 (No. 13)	6'-5" (1.94 m)
u_1	2	No. 4 (No. 13)	7'-5" (2.24 m)
v	16	No. 4 (No. 13)	30 (760)
v_1	6	No. 4 (No. 13)	24 (610)
v_2	8	No. 4 (No. 13)	18 (460)
Concrete		cu. yds. (m^3)	2.2 (1.68)
Reinf. Bars		lbs. (kg)	220 (99.8)
Galv. Steel Pipe		3½ O.D. (89)	11'-7⅜" (3.55 m)

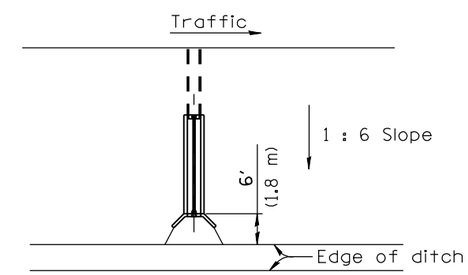

Sketch showing location and direction of box in relation to ditch.

GENERAL NOTES

All slope ratios are expressed as units of vertical displacement to units of horizontal displacement (V:H).

All dimensions are in inches (millimeters) unless otherwise shown.

Illinois Department of Transportation

PASSED January 1, 2007
ENGINEER OF POLICY AND PROCEDURES
APPROVED January 1, 2007
ENGINEER OF DESIGN AND ENVIRONMENT

ISSUED 1-1-97

DATE	REVISIONS
1-1-09	Switched units to English (metric).
1-1-07	Soft converted metric reinforcement bars.

INLET BOX TYPE 24 (600) D

(Sheet 1 of 2)

STANDARD 542516-02

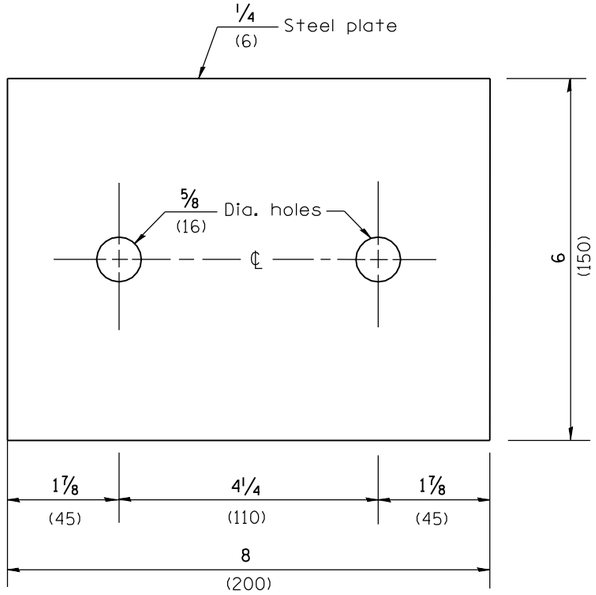

TOP ANCHOR PLATE

(1-required)

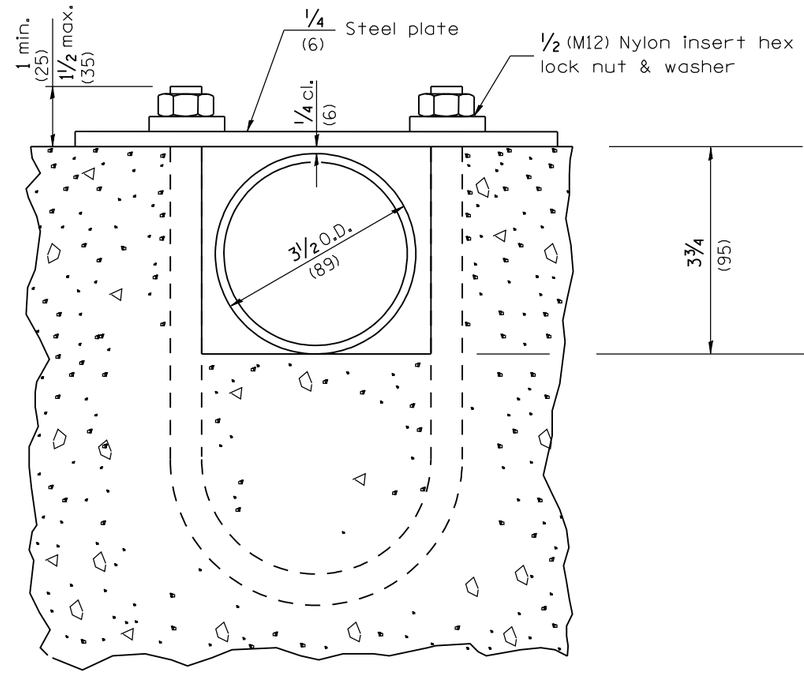

SECTION B-B

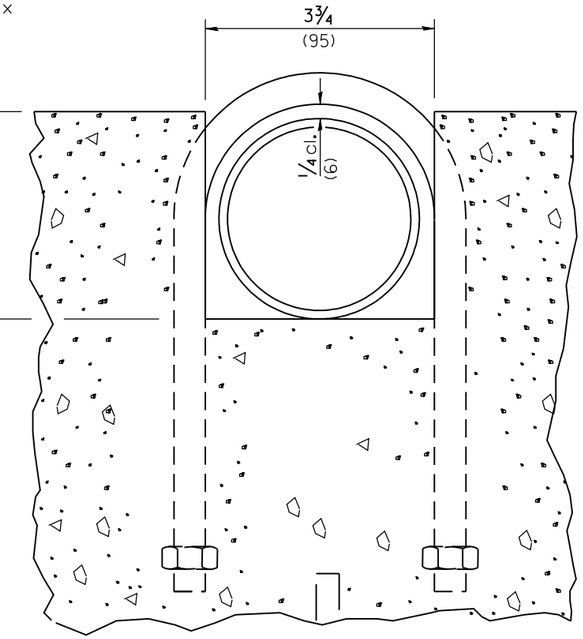

SECTION C-C

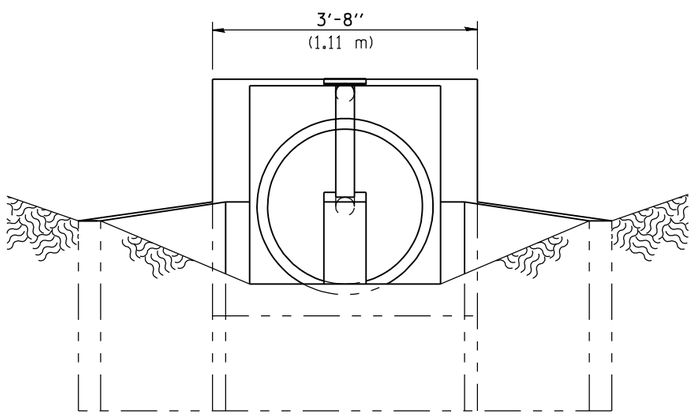

END VIEW

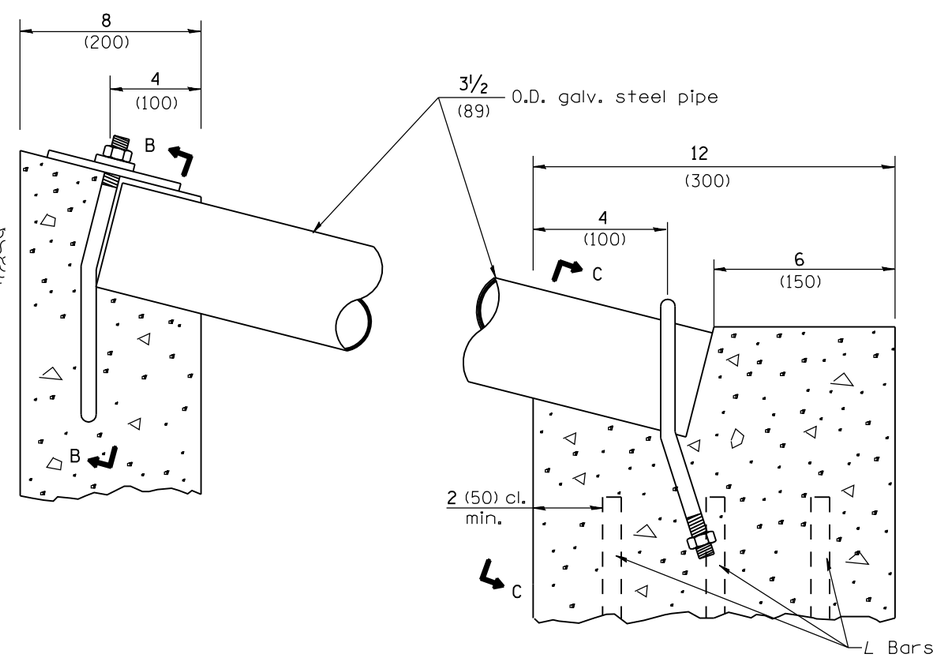

DETAIL AT BLOCKOUTS

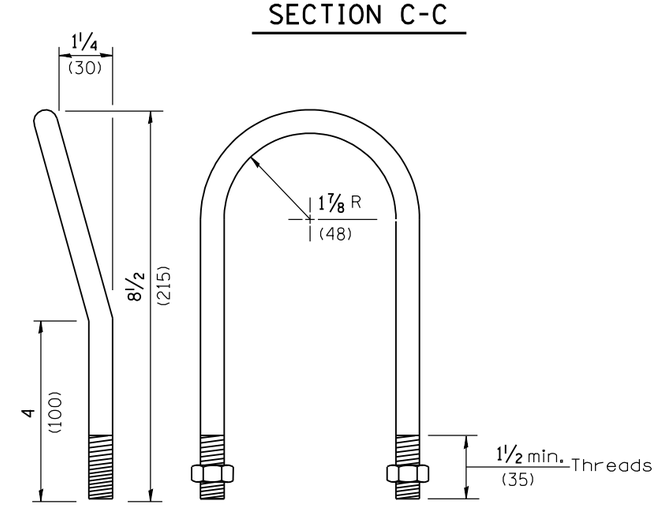

1/2 (M12) U BOLT

(2-required)

Illinois Department of Transportation

PASSED January 1, 2009

ENGINEER OF POLICY AND PROCEDURES

APPROVED January 1, 2009

ENGINEER OF DESIGN AND ENVIRONMENT

ISSUED 1-1-97

INLET BOX TYPE 24 (600) D

(Sheet 2 of 2)

STANDARD 542516-02

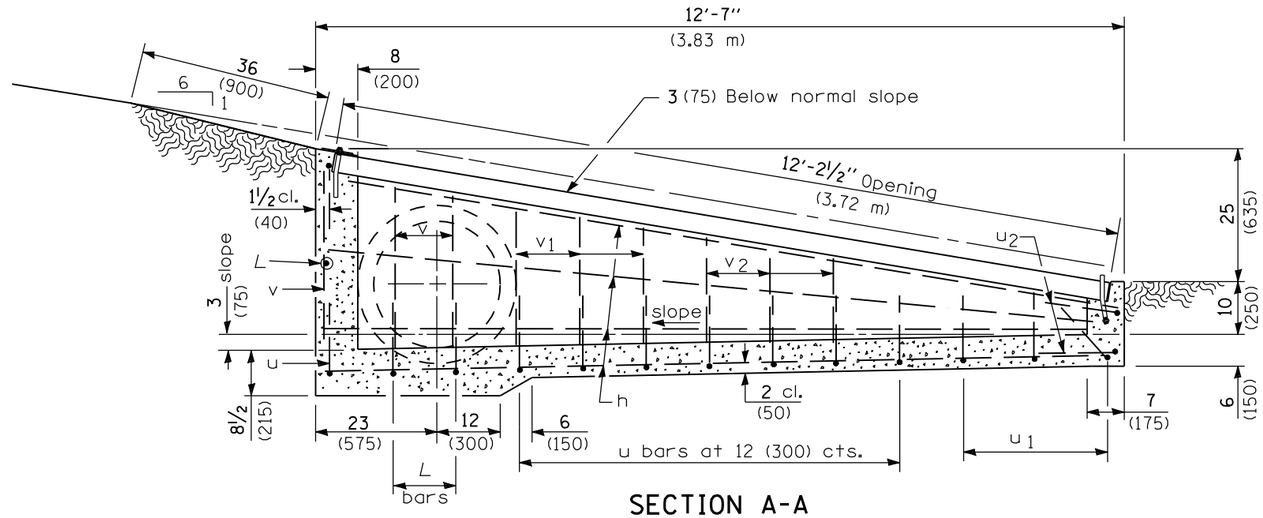

SECTION A-A

Material required for one inlet box

Bar	Qty.	Size	Length
h	8	No. 4 (No. 13)	12'-0" (3.66 m)
h_1	2	No. 4 (No. 13)	9'-0" (2.75 m)
L	5	No. 4 (No. 13)	5'-0" (1.50 m)
u	9	No. 4 (No. 13)	6'-5" (1.95 m)
u_1	3	No. 4 (No. 13)	5'-11" (1.80 m)
u_2	2	No. 4 (No. 13)	5'-10" (1.75 m)
v	6	No. 4 (No. 13)	30 (760)
v_1	6	No. 4 (No. 13)	24 (610)
v_2	6	No. 4 (No. 13)	18 (460)
Concrete		cu. yds. (m^3)	2.0 (1.5)
Reinforcement Bars		lbs. (kg)	175 (79.4)
Galv. Steel Pipe		3½ O.D. (89)	12'-2¼" (3.71 m)

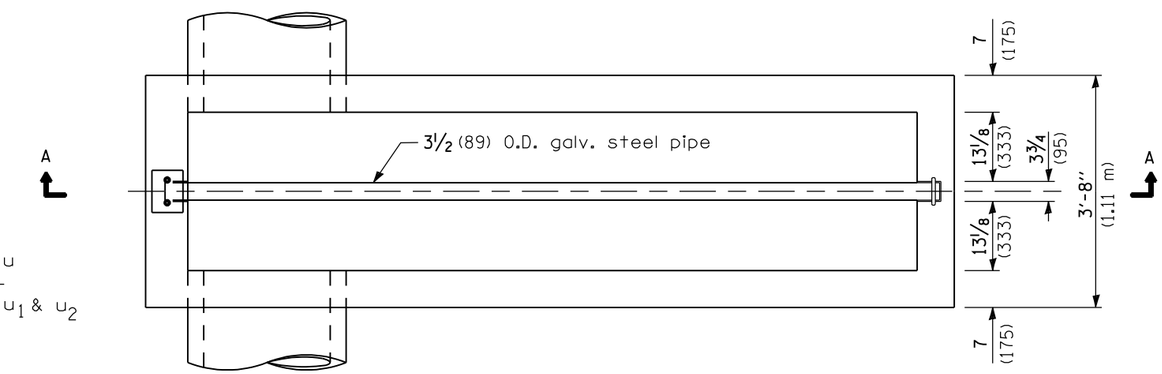

PLAN

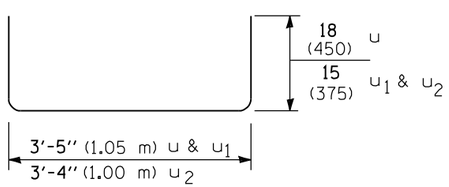

Bars u, u_1 & u_2

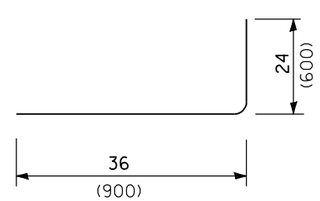

Bar L

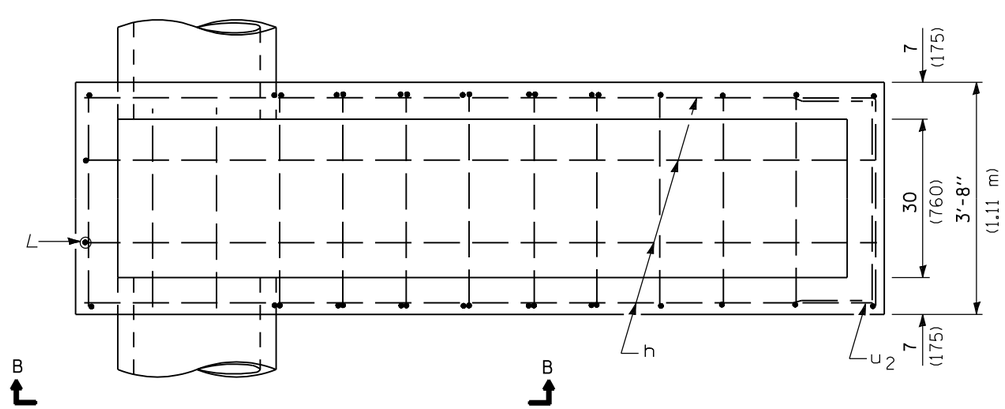

PLAN OF REINFORCEMENT

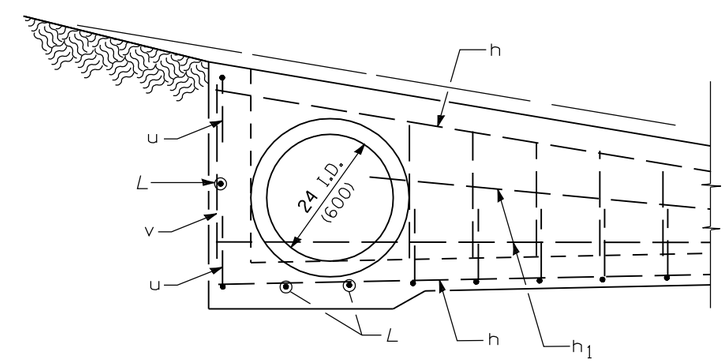

SECTION B-B

GENERAL NOTES

All slope ratios are expressed as units of vertical displacement to units of horizontal displacement (V:H).

All dimensions are in inches (millimeters) unless otherwise shown.

Illinois Department of Transportation

PASSED January 1, 2009
ENGINEER OF POLICY AND PROCEDURES

APPROVED January 1, 2009
ENGINEER OF DESIGN AND ENVIRONMENT

ISSUED 1-1-97

DATE	REVISIONS
1-1-09	Switched units to English (metric).
1-1-07	Soft converted metric reinforcement bars.

INLET BOX TYPE 24 (600) E

(Sheet 1 of 2)

STANDARD 542521-02

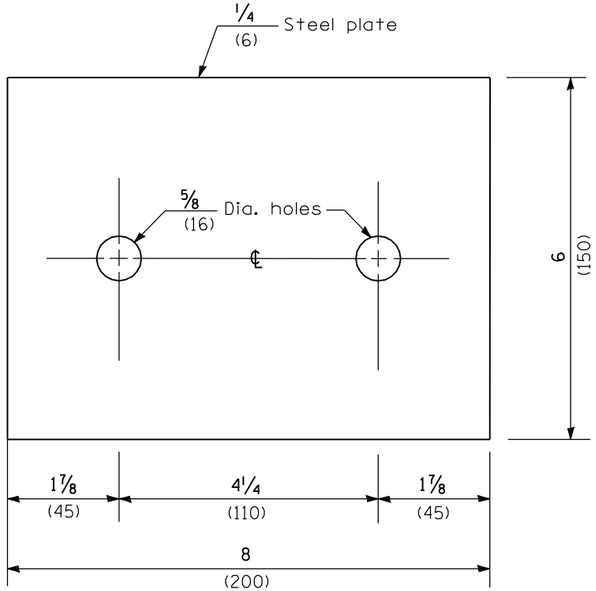

TOP ANCHOR PLATE

(1 - required)

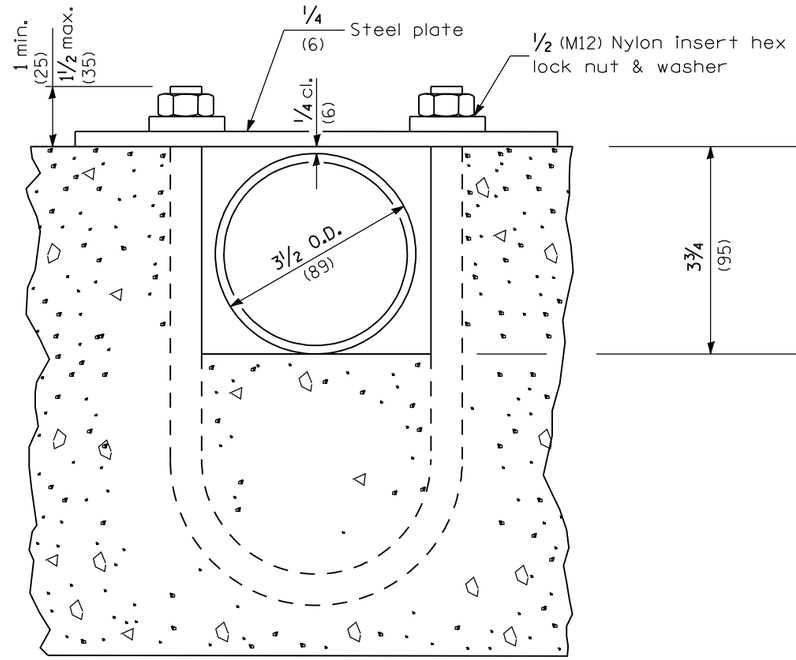

SECTION D-D

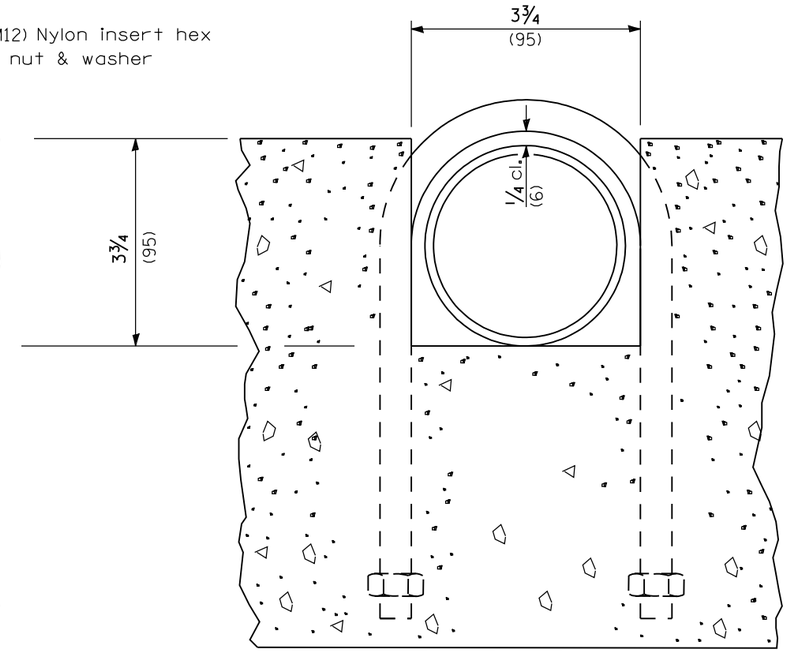

SECTION C-C

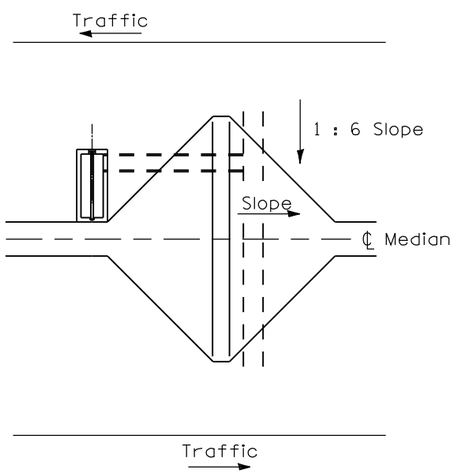

Sketch showing location and direction of box in relation to ℄ median.

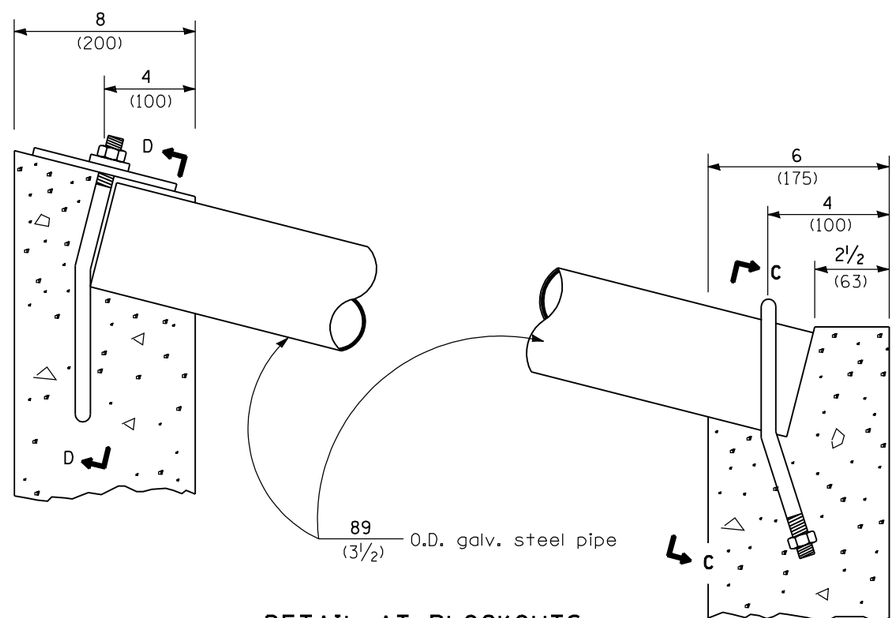

DETAIL AT BLOCKOUTS

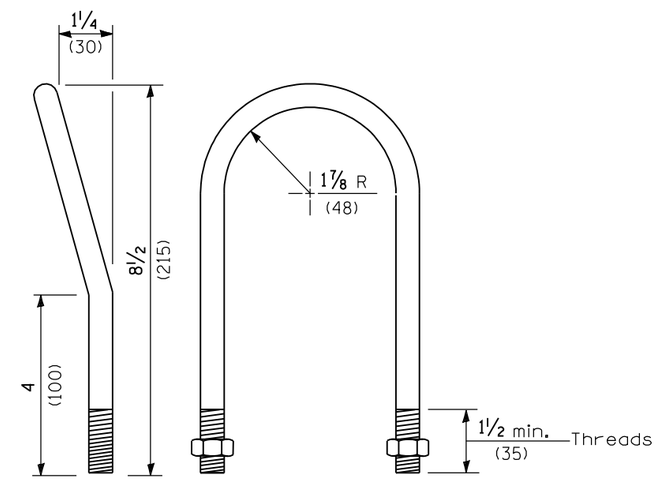

1/2 (M12) U BOLT

(2- required)

Illinois Department of Transportation

PASSED January 1, 2009

ENGINEER OF POLICY AND PROCEDURES

APPROVED January 1, 2009

ENGINEER OF DESIGN AND ENVIRONMENT

ISSUED 1-1-97

INLET BOX TYPE 24 (600) E

(Sheet 2 of 2)

STANDARD 542521-02

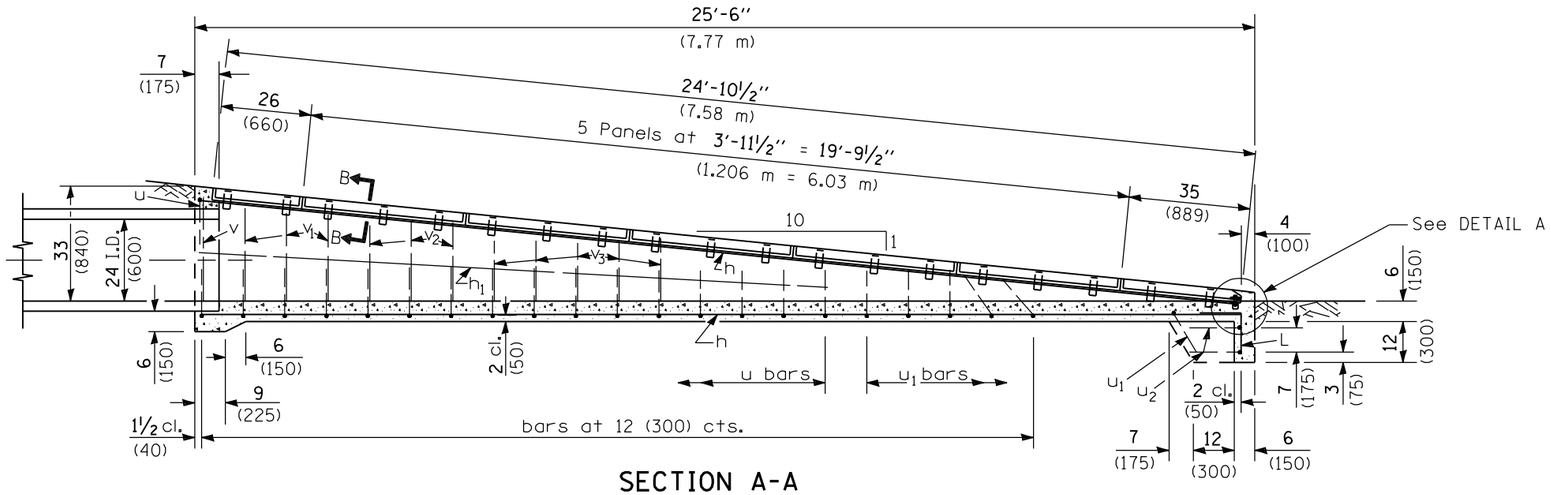

SECTION A-A

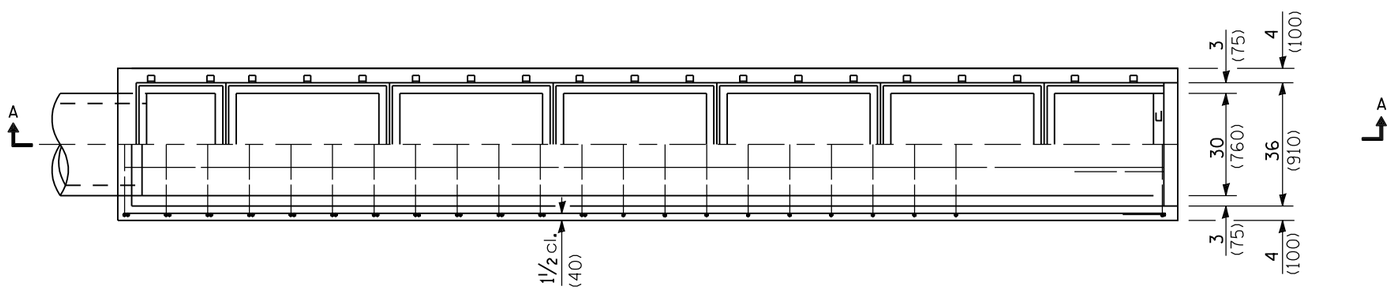

PLAN

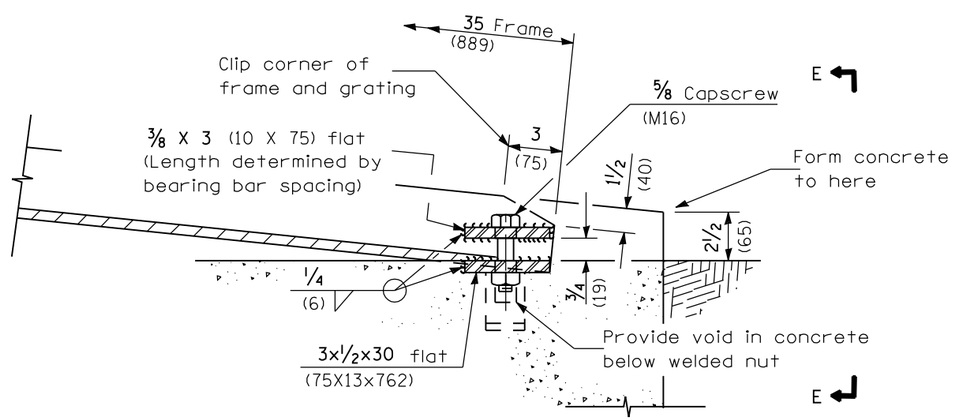

DETAIL A

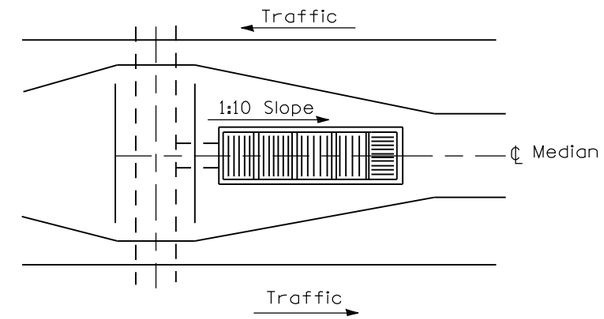

Sketch showing location and direction of main bearing bars in relation to ℄ median

GENERAL NOTES

If field conditions permit, the bottom of the inlet box shall have a 2 (50) slope.

All slope ratios are expressed as units of vertical displacement to units of horizontal displacement (V:H).

All dimensions are in inches (millimeters) unless otherwise shown.

Illinois Department of Transportation

PASSED January 1, 2009
ENGINEER OF POLICY AND PROCEDURES
APPROVED January 1, 2009
ENGINEER OF DESIGN AND ENVIRONMENT

ISSUED 1-1-97

DATE	REVISIONS
1-1-09	Switched units to
	English (metric). Revised
	General Notes.
1-1-07	Increased depth of
	f & g. Soft coverted
	metric rebars.

INLET BOX TYPE 24 (600) F

(Sheet 1 of 2)

STANDARD 542526-02

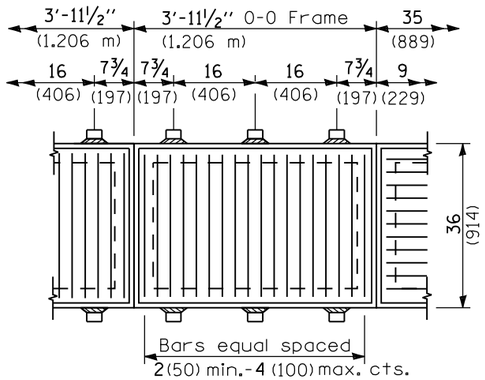

TYPICAL STEEL GRATING

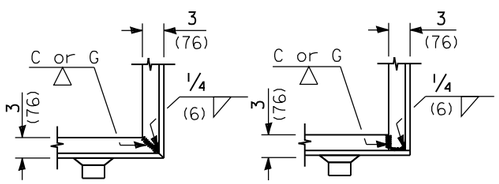

TYPICAL CORNER OF STEEL GRATING FRAME

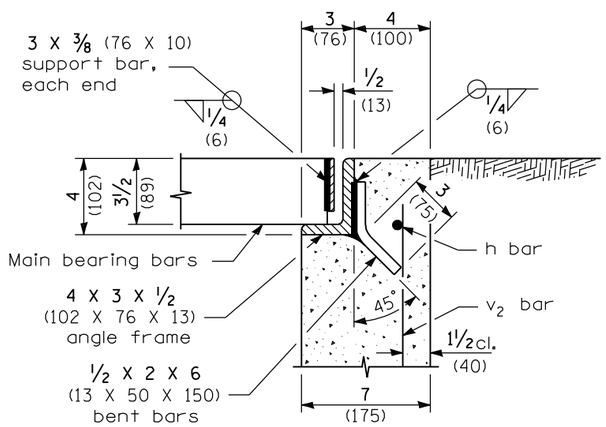

SECTION B-B

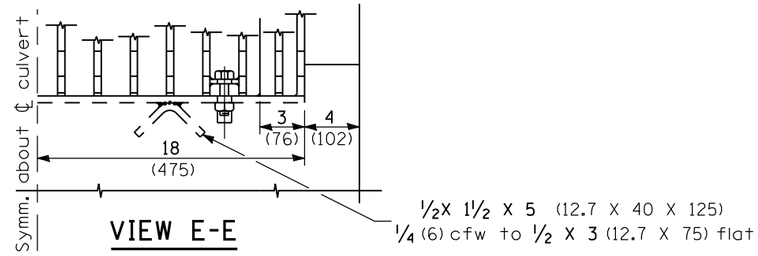

VIEW E-E

Material Required for One Inlet Box

Bar	No.	Size	Length
h	6	No. 4 (No. 13)	25'-0" (7.62 m)
h_1	2	No. 4 (No. 13)	11'-0" (3.35 m)
L	4	No. 4 (No. 13)	24 (600)
u	17	No. 4 (No. 13)	6'-5" (1.96 m)
u_1	6	No. 4 (No. 13)	5'-11" (1.80 m)
u_2	2	No. 4 (No. 13)	5'-10" (1.78 m)
v	2	No. 4 (No. 13)	30 (760)
v_1	6	No. 4 (No. 13)	27 (690)
v_2	6	No. 4 (No. 13)	24 (610)
v_3	10	No. 4 (No. 13)	18 (460)
Concrete		cu. yds. (m^3)	3.4 (2.6)
Reinf. Bars		lbs. (kg)	250 (113)
Grating		(sq. ft.) (m^2)	70.4 (6.54)

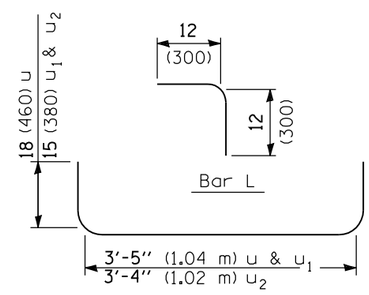

BARS u, u_1 & u_2

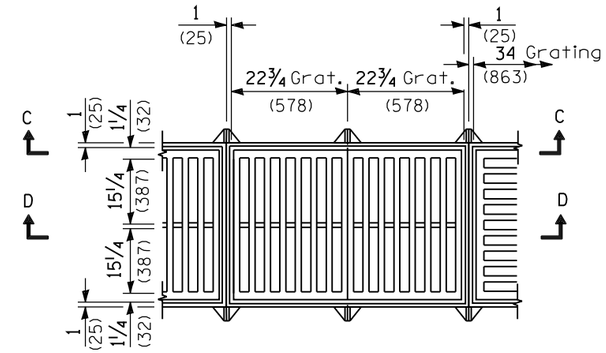

TYPICAL CAST GRATING

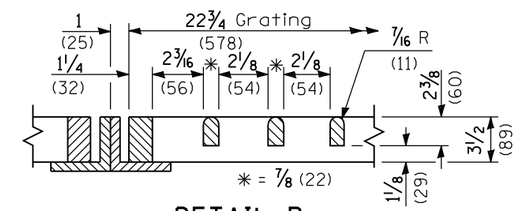

DETAIL B

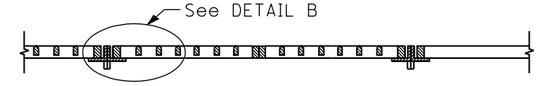

SECTION C-C

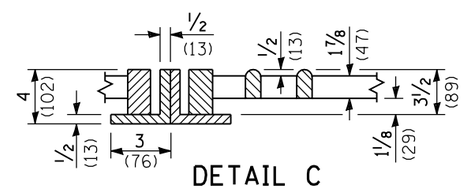

DETAIL C

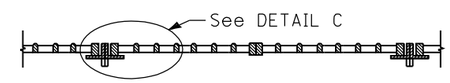

SECTION D-D

Illinois Department of Transportation

PASSED January 1, 2009
ENGINEER OF POLICY AND PROCEDURES
APPROVED January 1, 2009
ENGINEER OF DESIGN AND ENVIRONMENT

ISSUED 1-1-97

INLET BOX TYPE 24 (600) F

(Sheet 2 of 2)

STANDARD 542526-02

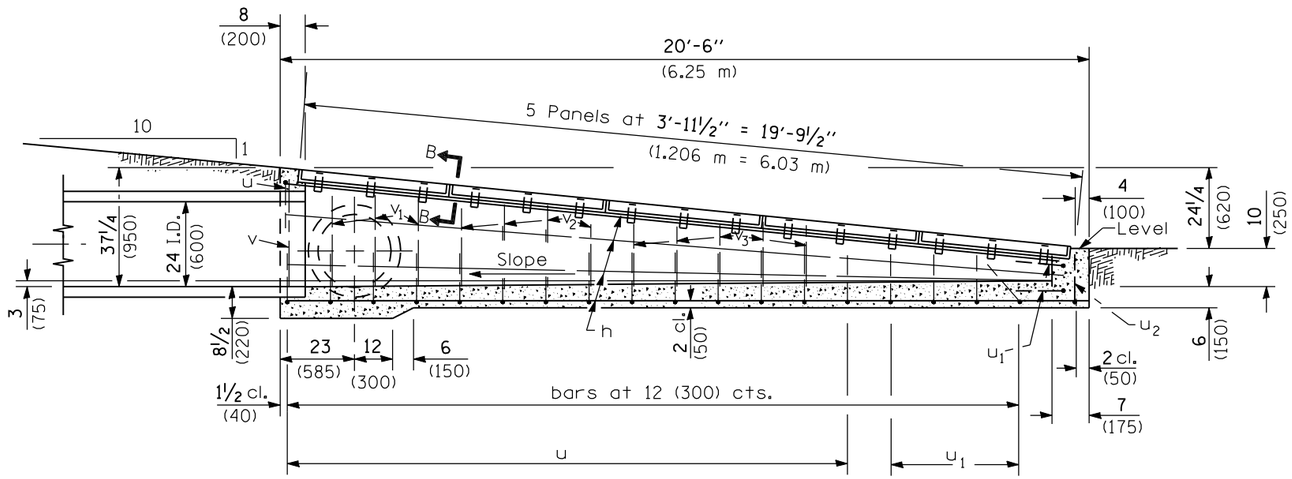

SECTION A-A

NOTE: Culvert pipe may exit from the side (or sides) by changing reinforcement bars in that area and in the headwall end of box.

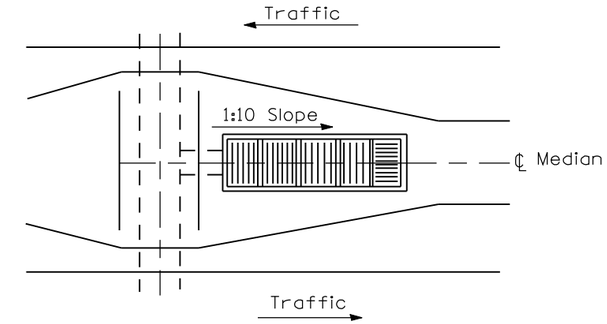

Sketch showing location and direction of main bearing bars in relation to ℄ median (showing exit from end)

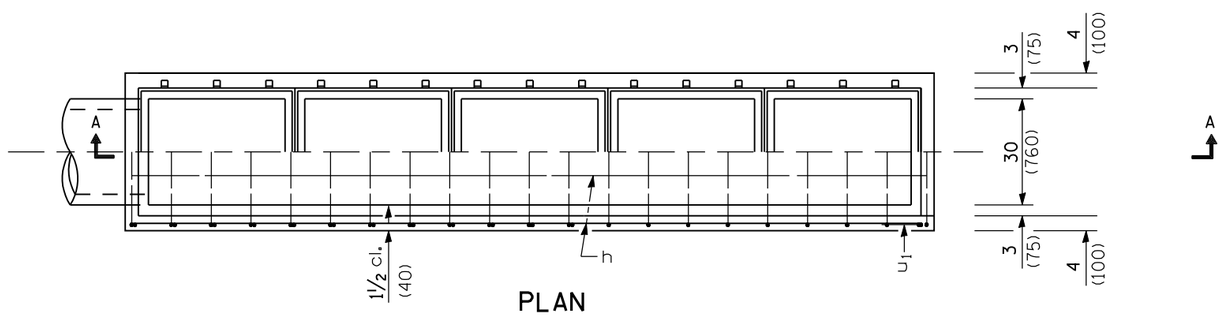

PLAN

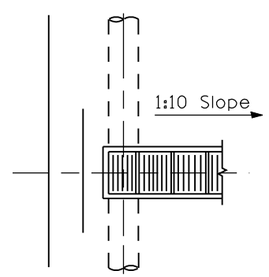

Detail showing exit from side (or sides)

GENERAL NOTES

If field conditions will permit, bottom of inlet box shall have 2 (50) slope.

All slope ratios are expressed as units of vertical displacement to units of horizontal displacement (V:H).

All dimensions are in inches (millimeters) unless otherwise shown.

Illinois Department of Transportation

PASSED January 1, 2009
ENGINEER OF POLICY AND PROCEDURES

APPROVED January 1, 2009
ENGINEER OF DESIGN AND ENVIRONMENT

ISSUED 1-1-97

DATE	REVISIONS
1-1-09	Switched units to English (metric). Revised General Notes.
1-1-07	Increased depth of f & g. Soft converted metric rebars.

INLET BOX TYPE 24 (600) G

(Sheet 1 of 2)

STANDARD 542531-03

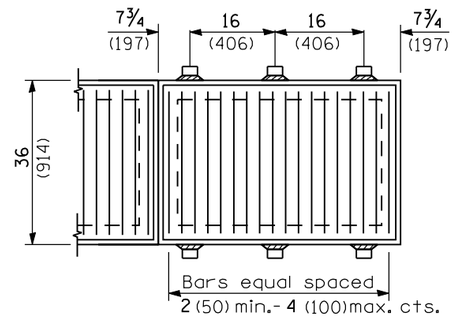

TYPICAL STEEL GRATING

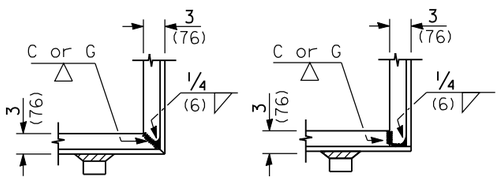

TYPICAL CORNER of STEEL GRATING FRAME

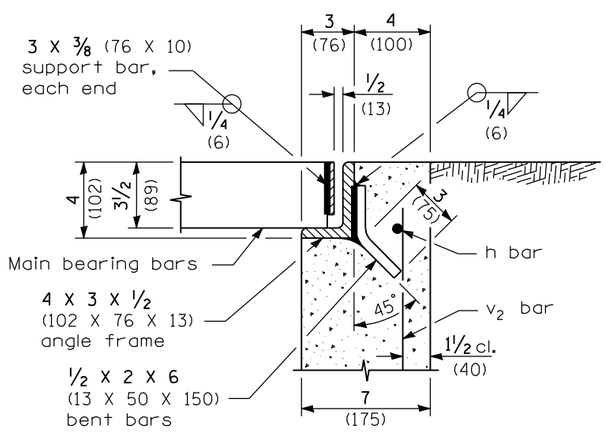

SECTION B-B

Material required for one inlet box

Bar	No.	Size	Length
h	10	No. 4 (No. 13)	20′-0″ (6.10 m)
u	17	No. 4 (No. 13)	6′-5″ (1.96 m)
u_1	6	No. 4 (No. 13)	5′-11″ (1.80 m)
u_2	1	No. 4 (No. 13)	5′-6″ (1.68 m)
v	2	No. 4 (No. 13)	33 (840)
v_1	6	No. 4 (No. 13)	30 (760)
v_2	10	No. 4 (No. 13)	24 (610)
v_3	10	No. 4 (No. 13)	18 (460)
Concrete		cu. yds. (m^3)	3.2 (2.45)
Reinf. bars		lbs. (kg)	270 (122)
Grating		sq. ft. (m^2)	56.0 (5.20)

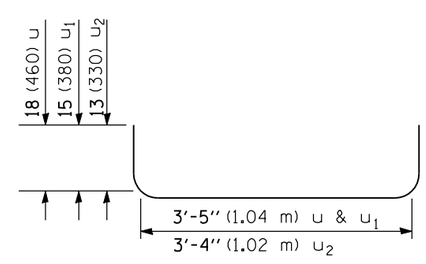

BARS u, u_1 & u_2

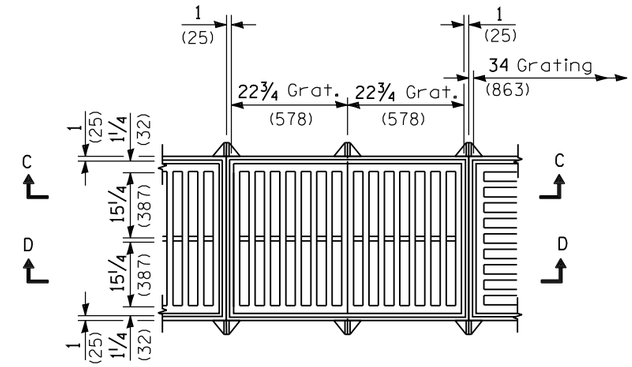

TYPICAL CAST GRATING

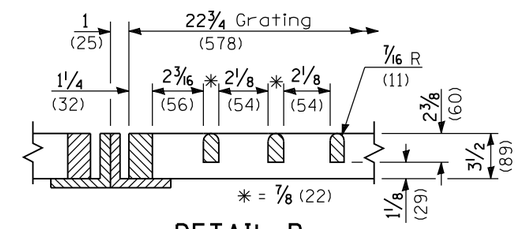

DETAIL B

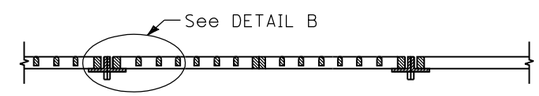

SECTION C-C

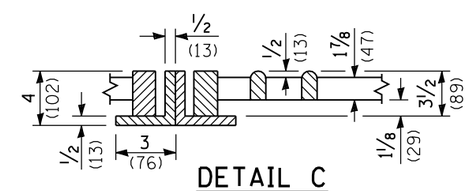

DETAIL C

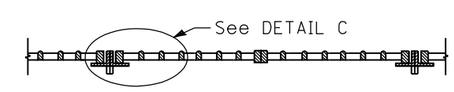

SECTION D-D

Illinois Department of Transportation

PASSED January 1, 2009
ENGINEER OF POLICY AND PROCEDURES
APPROVED January 1, 2009
ENGINEER OF DESIGN AND ENVIRONMENT

ISSUED 1-1-97

INLET BOX TYPE 24 (600) G

(Sheet 2 of 2)

STANDARD 542531-03

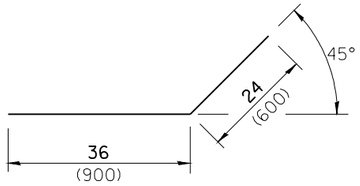

Bar h_2

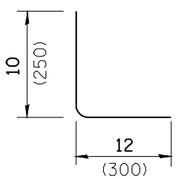

Bar L

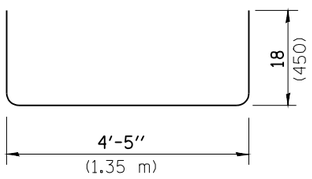

Bar u

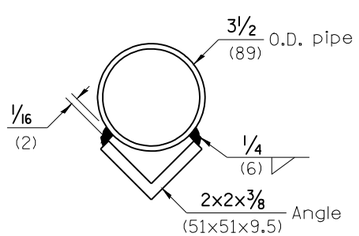

SECTION D-D

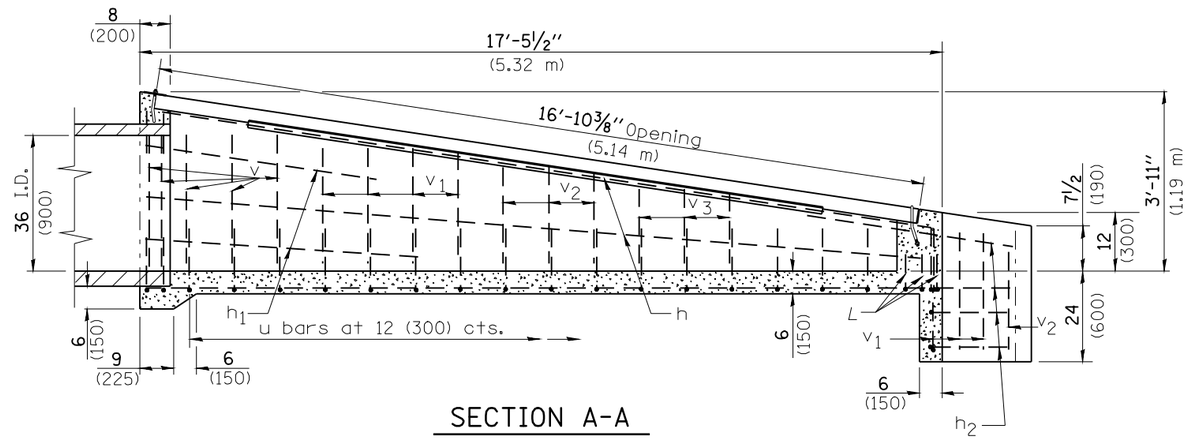

SECTION A-A

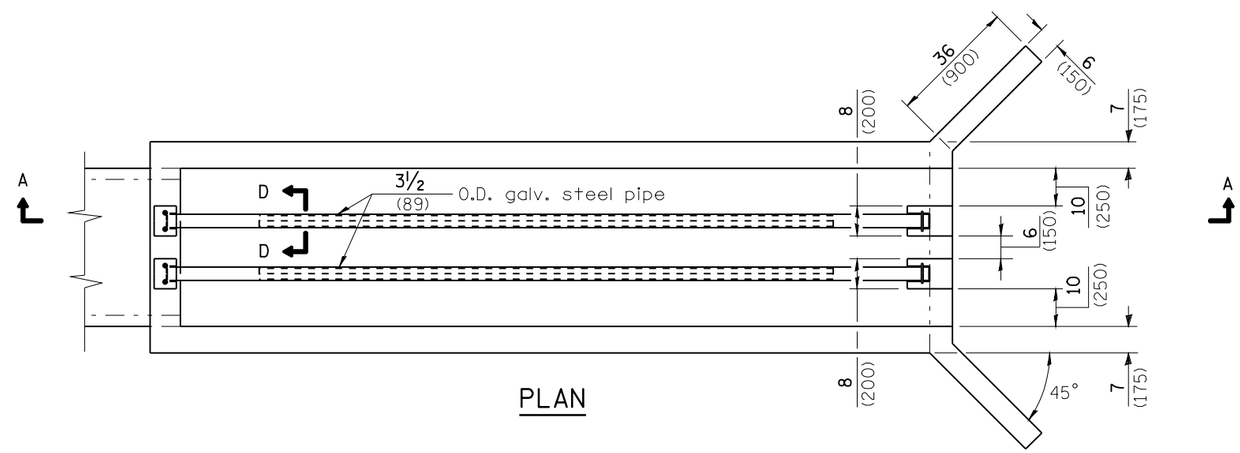

PLAN

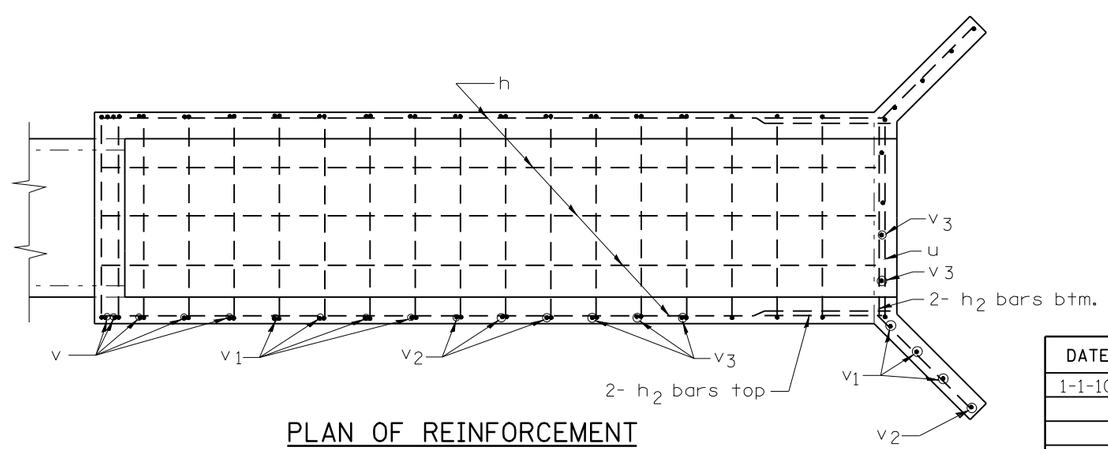

PLAN OF REINFORCEMENT

Material required for one inlet box

Bar	Qty.	Size	Length
h	9	No. 4 (No. 13)	17'-0" (5.18 m)
h_1	4	No. 4 (No. 13)	6'-3" (1.90 m)
h_2	8	No. 4 (No. 13)	5'-0" (1.50 m)
L	6	No. 4 (No. 13)	22 (550)
u	21	No. 4 (No. 13)	7'-5" (2.25 m)
v	10	No. 4 (No. 13)	36 (910)
v_1	14	No. 4 (No. 13)	30 (760)
v_2	8	No. 4 (No. 13)	24 (610)
v_3	10	No. 4 (No. 13)	18 (460)
Concrete		cu. yds. (m^3)	3.9 (3.0)
Reinf. Bars		lbs. (kg)	319 (145)
Galv. Steel Pipe		3½ O.D. (89)	2 at 16'-10⅛" 2 at (5.15 m)
Galv. Steel Angle		2x2x⅜ (51x51x9.5)	2 at 12'-10" 2 at (3.90 m)

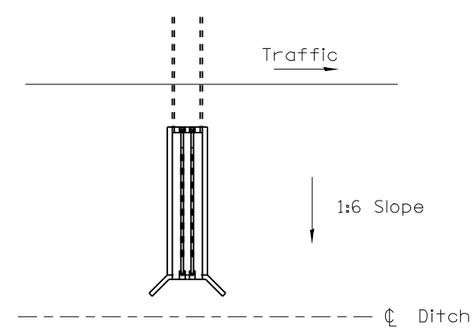

Sketch showing location and direction of box in relation to ℄ of ditch.

GENERAL NOTES

All slope ratios are expressed as units of vertical displacement to units of horizontal displacement (V:H).

All dimensions are in inches (millimeters) unless otherwise shown.

Illinois Department of Transportation

PASSED January 1, 2010
ENGINEER OF POLICY AND PROCEDURES

APPROVED January 1, 2010
ENGINEER OF DESIGN AND ENVIRONMENT

ISSUED 1-1-97

DATE	REVISIONS
1-1-10	Corrected 3'-11" vertical
	dimension line in
	Section A-A.
1-1-09	Switched units to
	English (metric).

INLET BOX TYPE 36 (900) A

(Sheet 1 of 2)

STANDARD 542536–03

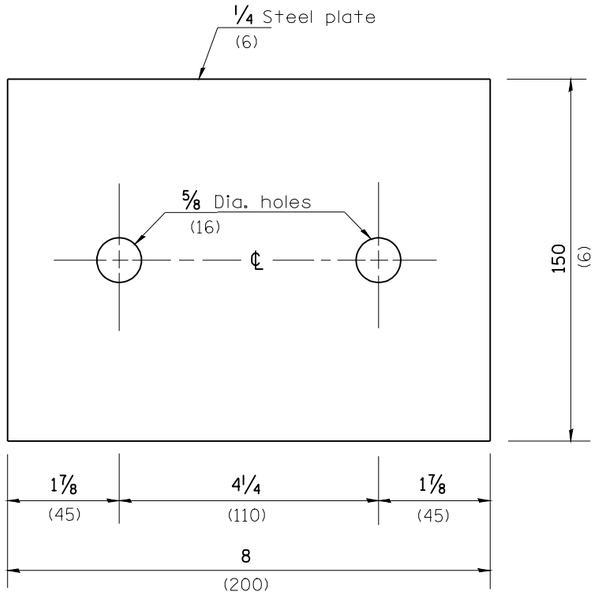

TOP ANCHOR PLATE

(2 - required)

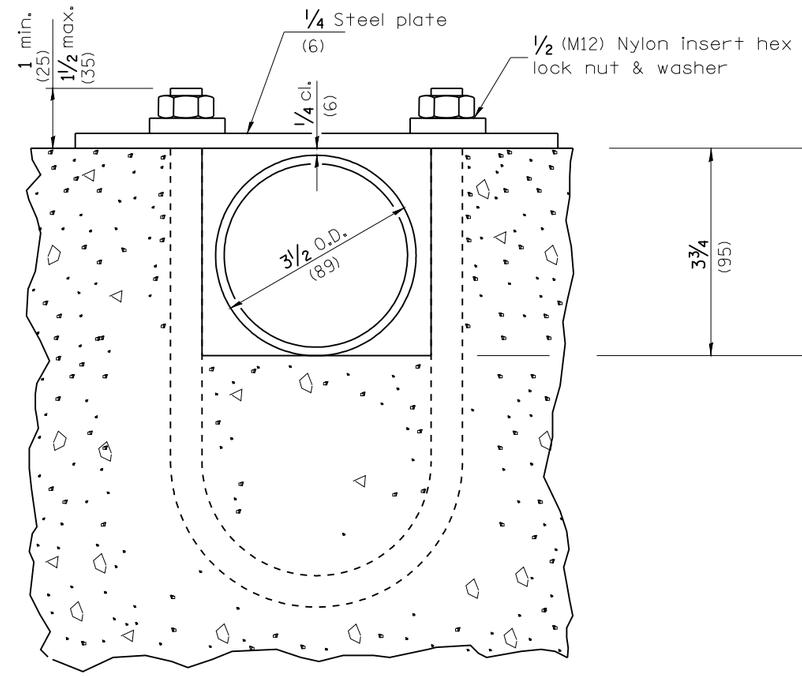

SECTION B-B

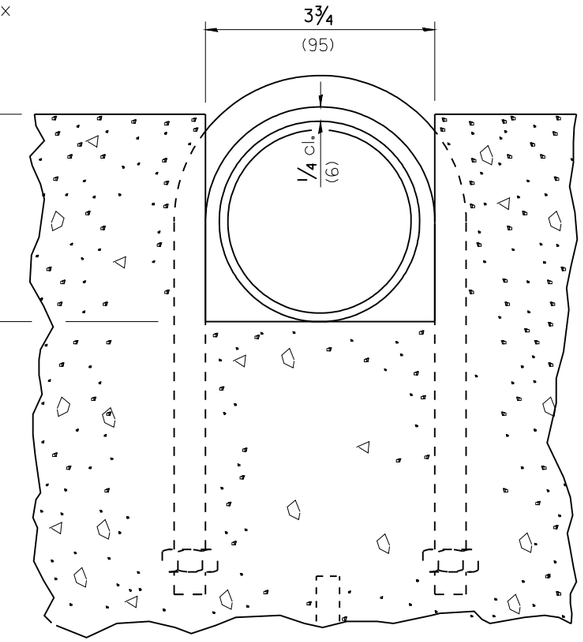

SECTION C-C

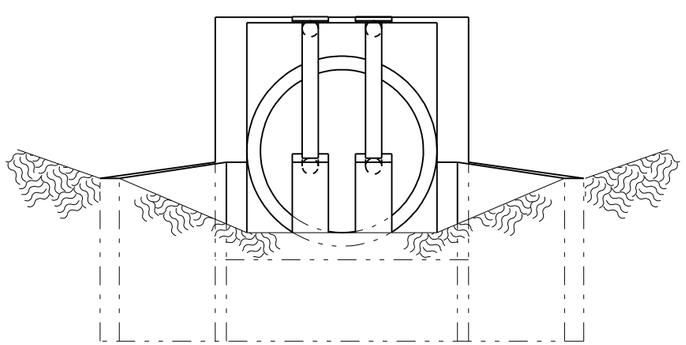

END VIEW

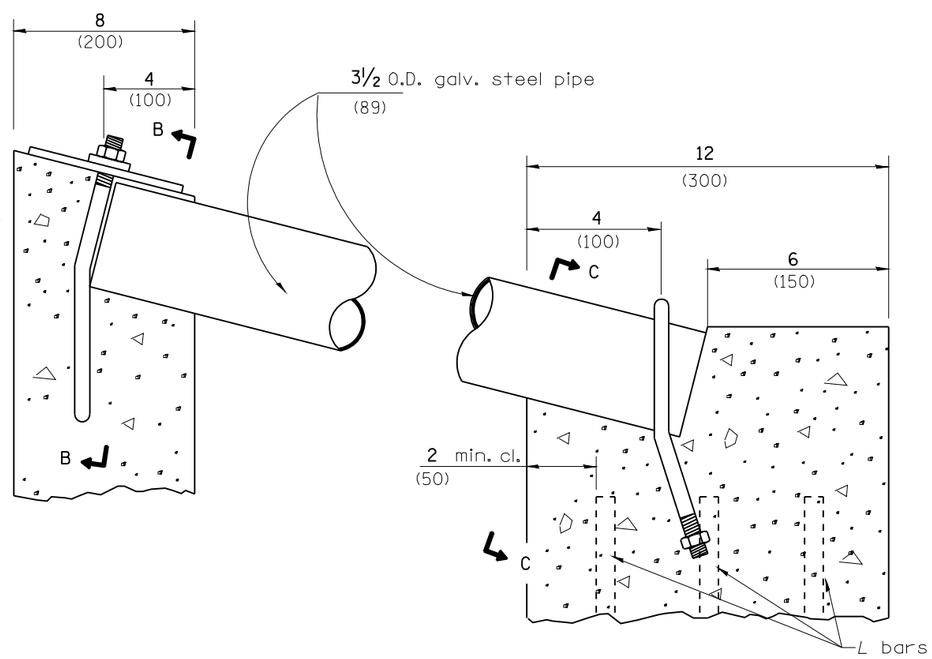

DETAIL AT BLOCKOUTS

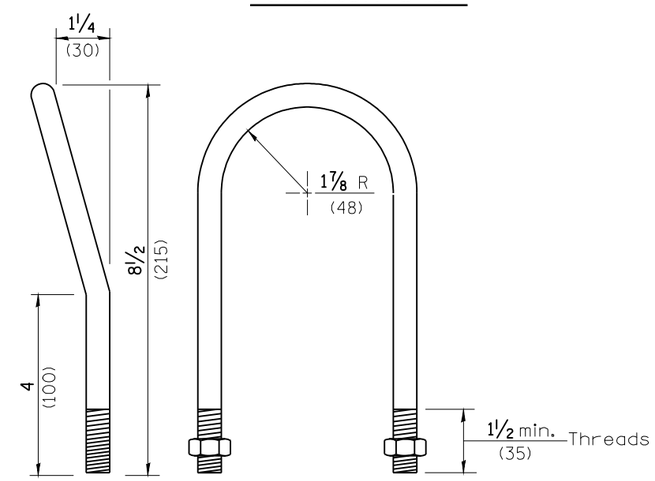

1/2 (M12) U BOLT

(4 - required)

Illinois Department of Transportation

PASSED January 1, 2010

ENGINEER OF POLICY AND PROCEDURES

APPROVED January 1, 2010

ENGINEER OF DESIGN AND ENVIRONMENT

ISSUED 1-1-97

INLET BOX
TYPE 36 (900) A

(Sheet 2 of 2)

STANDARD 542536-03

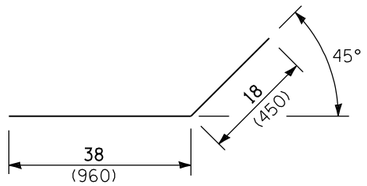

Bar h_2

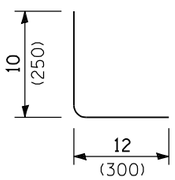

Bar L

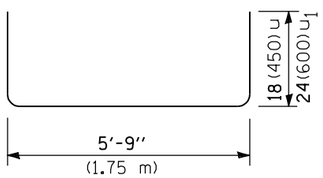

Bar u & u_1

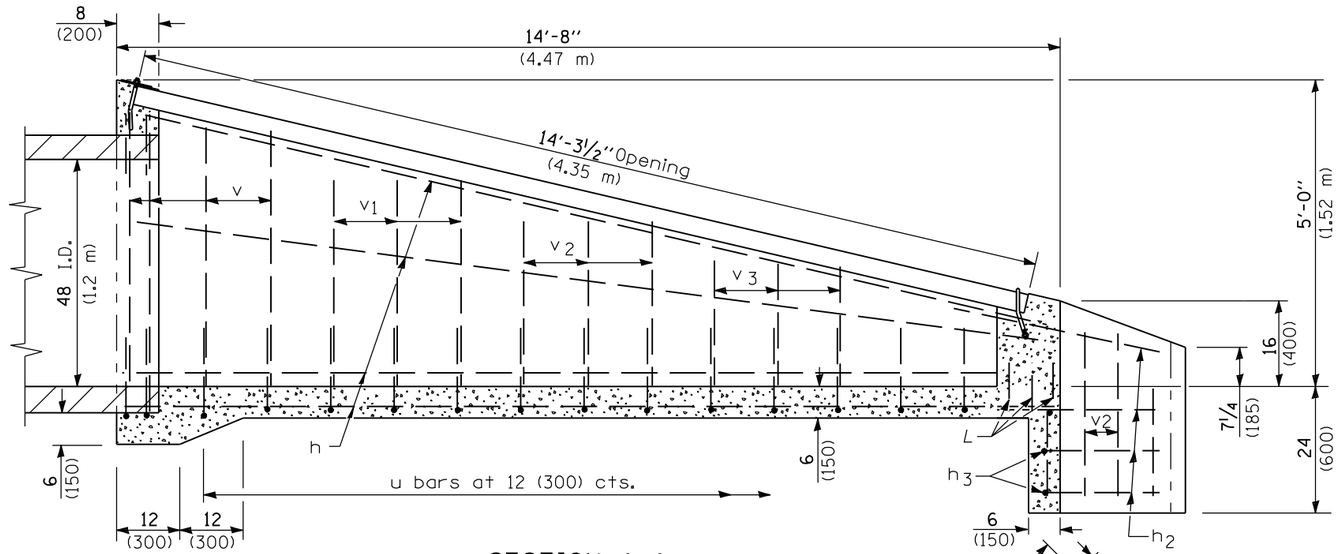

SECTION A-A

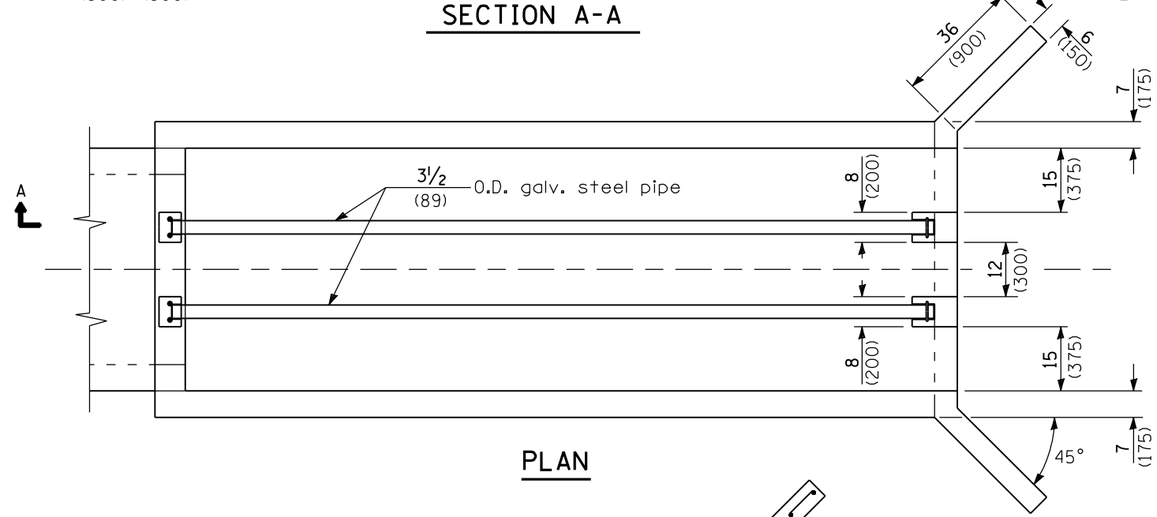

PLAN

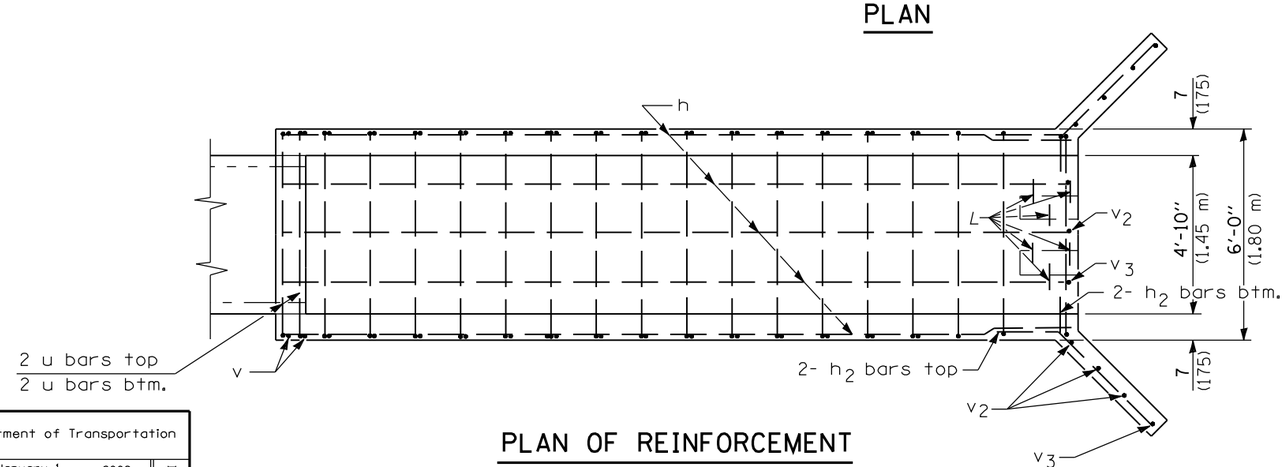

PLAN OF REINFORCEMENT

Material required for one inlet box

Bar	Qty.	Size	Length
h	11	No. 4 (No. 13)	14'-5" (4.40 m)
h_2	8	No. 4 (No. 13)	4'-8" (1.40 m)
h_3	2	No. 4 (No. 13)	5'-6" (1.70 m)
L	6	No. 4 (No. 13)	22 (550)
u	16	No. 4 (No. 13)	8'-9" (2.67 m)
u_1	2	No. 4 (No. 13)	9'-9" (2.97 m)
v	8	No. 4 (No. 13)	4'-3" (1.30 m)
v_1	6	No. 4 (No. 13)	3'-6" (1.07 m)
v_2	13	No. 4 (No. 13)	33 (840)
v_3	10	No. 4 (No. 13)	21 (530)
Concrete		cu. yds. (m^3)	5.0 (3.80)
Reinf. Bars		lbs. (kg)	324 (147)
Galv. Steel Pipe		3½ O.D. (89)	2 at 14'-3¼" 2 at (4.35 m)

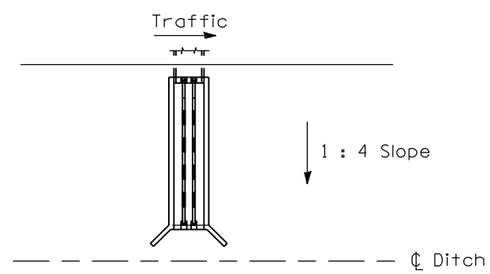

Sketch showing location and direction of box in relation to ℄ of ditch.

GENERAL NOTES

All slope ratios are expressed as units of vertical displacement to units of horizontal displacement (V:H).

All dimensions are in inches (millimeters) unless otherwise shown.

Illinois Department of Transportation

PASSED January 1, 2009
ENGINEER OF POLICY AND PROCEDURES
APPROVED January 1, 2009
ENGINEER OF DESIGN AND ENVIRONMENT

ISSUED 1-1-97

DATE	REVISIONS
1-1-09	Switched units to English (metric).
1-1-07	Soft converted metric rebars.

INLET BOX TYPE 48 (1200) A

(Sheet 1 of 2)

STANDARD 542541-02

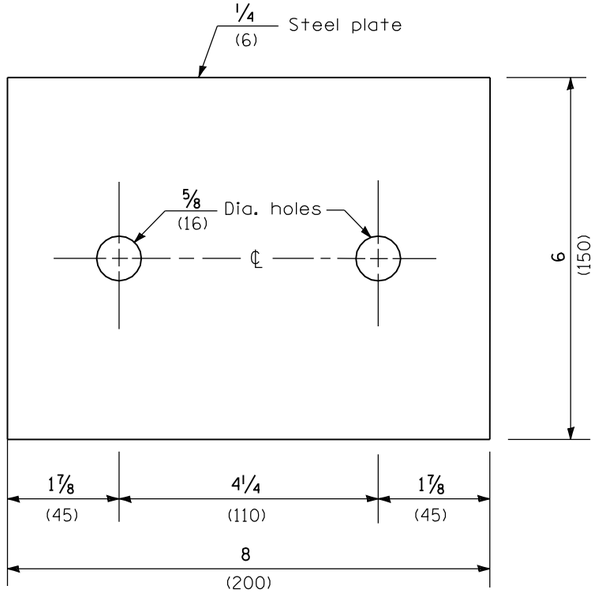

TOP ANCHOR PLATE

(2 - required)

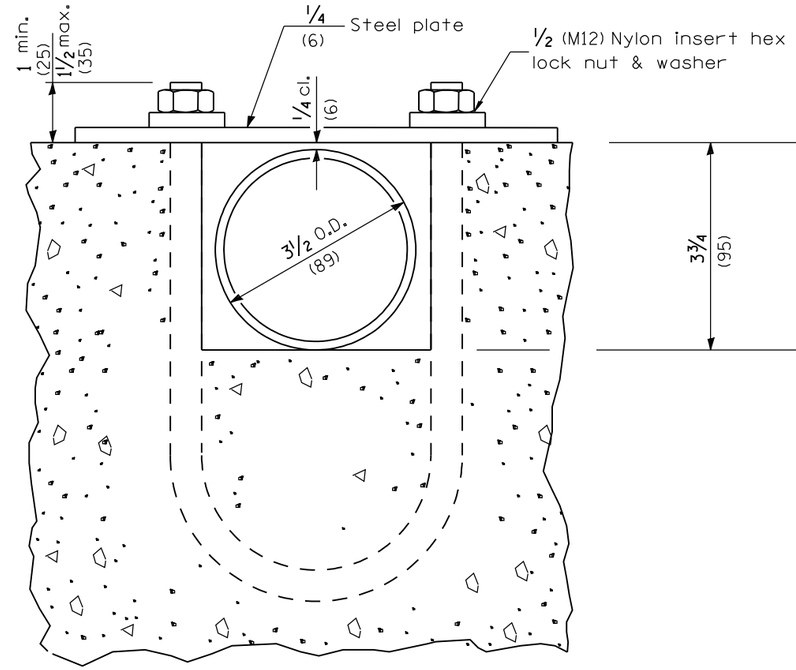

SECTION B-B

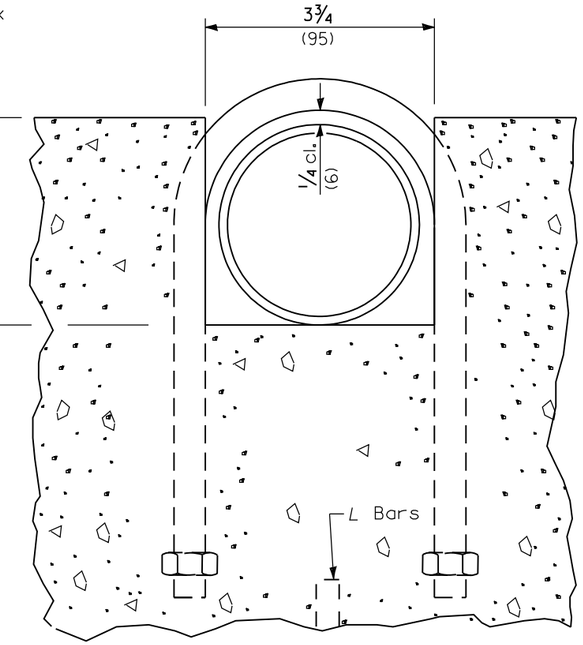

SECTION C-C

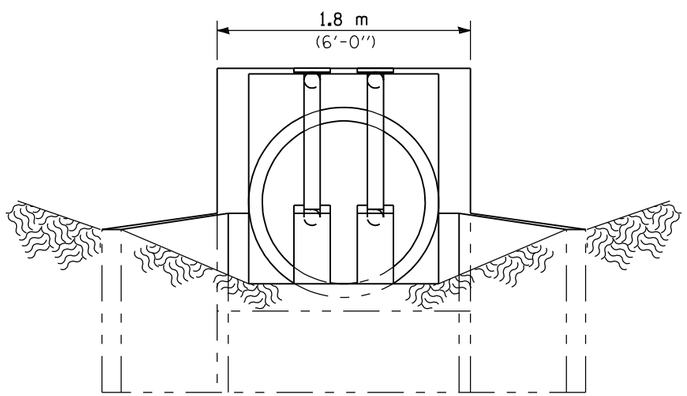

END VIEW

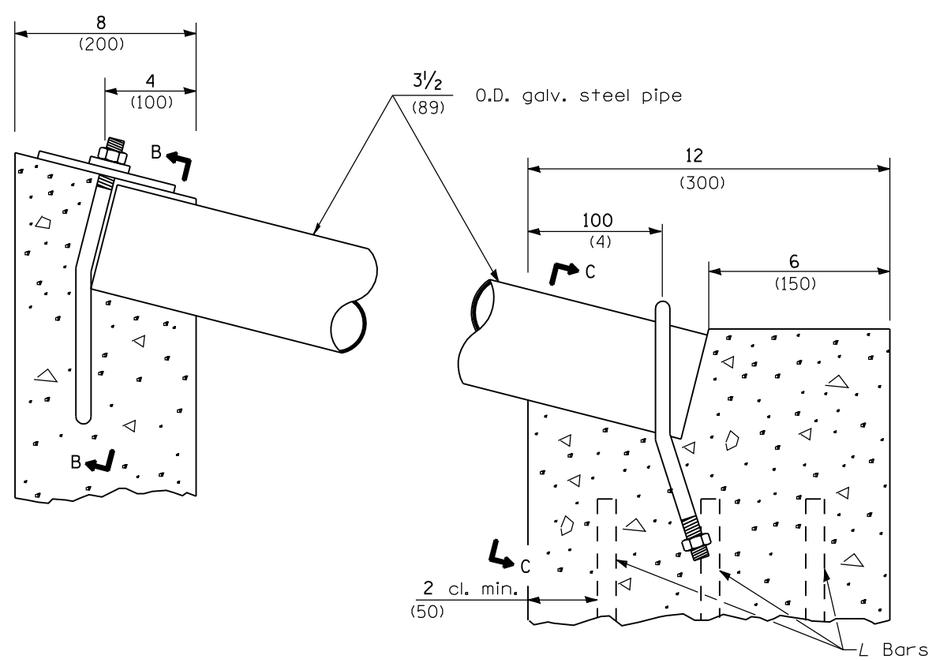

DETAIL AT BLOCKOUTS

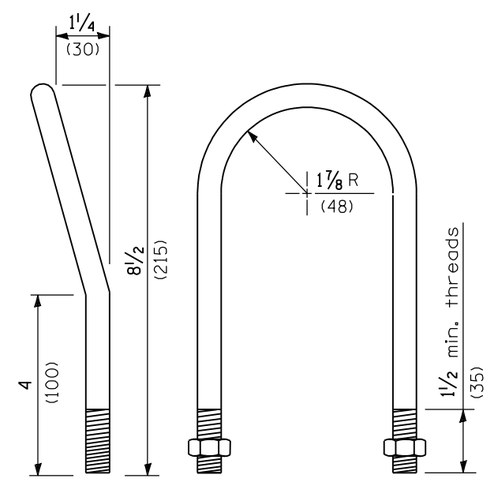

1/2 (M12) U BOLT

(4 - required)

Illinois Department of Transportation

PASSED January 1, 2009

ENGINEER OF POLICY AND PROCEDURES

APPROVED January 1, 2009

ENGINEER OF DESIGN AND ENVIRONMENT

ISSUED 1-1-97

INLET BOX TYPE 48 (1200) A

(Sheet 2 of 2)

STANDARD 542541-02

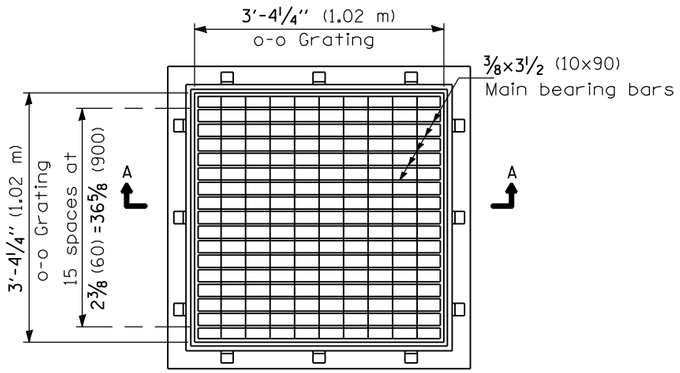

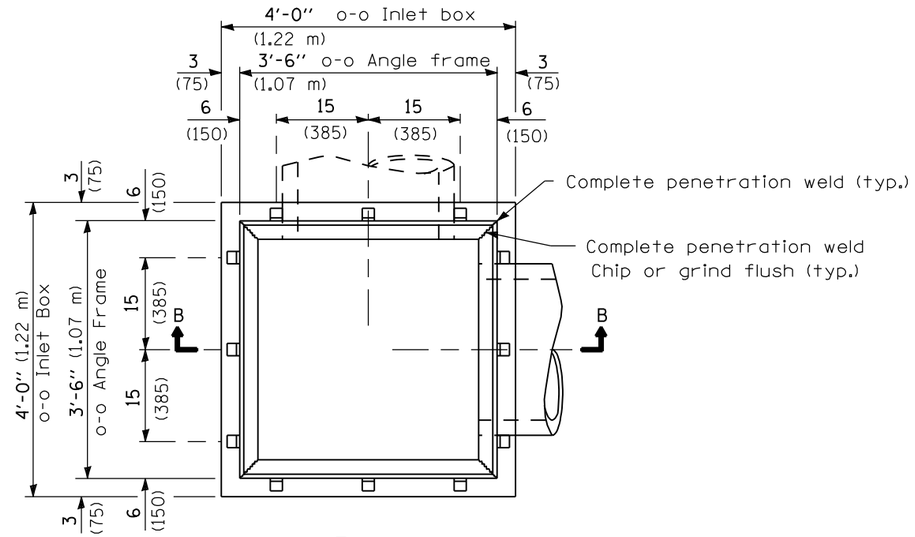

PLAN

(Grating omitted for clarity)

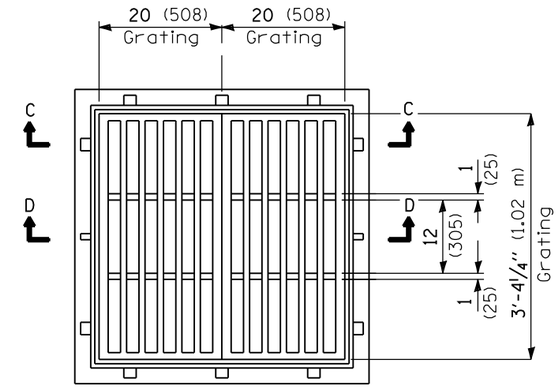

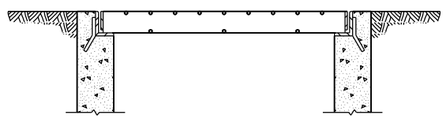

SECTION A-A

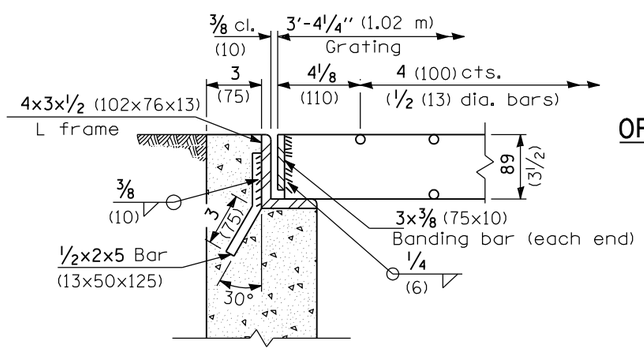

STEEL FRAME & GRATE

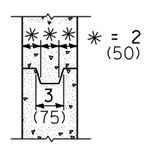

DETAIL of OPTIONAL JOINT

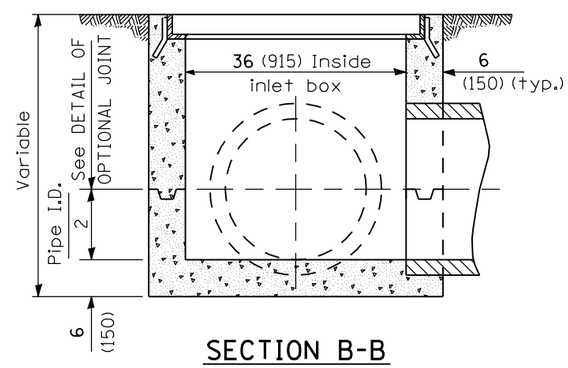

SECTION B-B

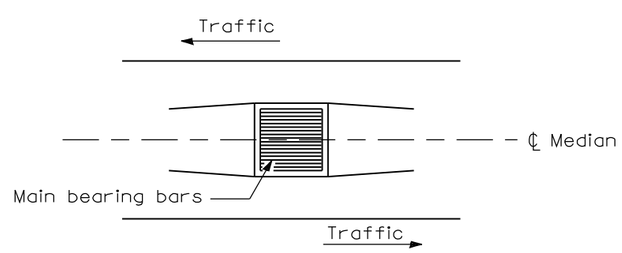

Sketch showing location and direction of main bearing bars in relation to ℄ median

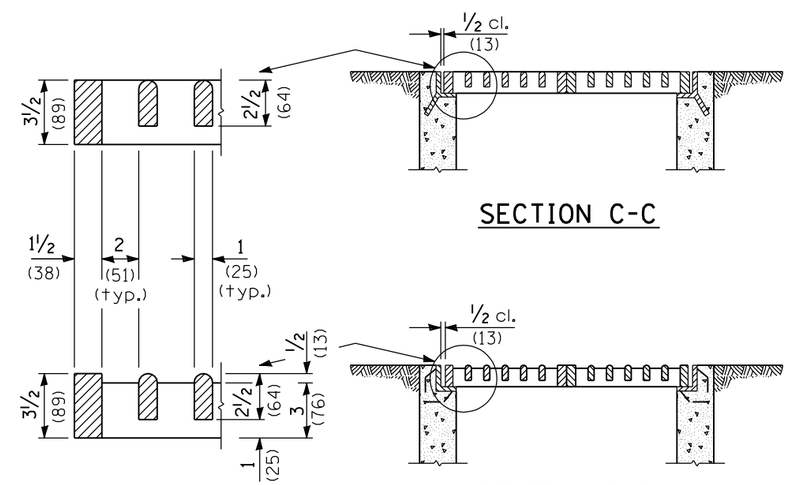

SECTION C-C

SECTION D-D

CAST FRAME & GRATE

All dimensions are in inches (millimeters) unless otherwise shown.

Illinois Department of Transportation

PASSED January 1, 2009
ENGINEER OF POLICY AND PROCEDURES
APPROVED January 1, 2009
ENGINEER OF DESIGN AND ENVIRONMENT

ISSUED 1-1-97

DATE	REVISIONS
1-1-09	Switched units to
	English (metric).
1-1-97	Renum. Standard 2240-6.

FLUSH INLET BOX FOR MEDIAN

STANDARD 542546-01

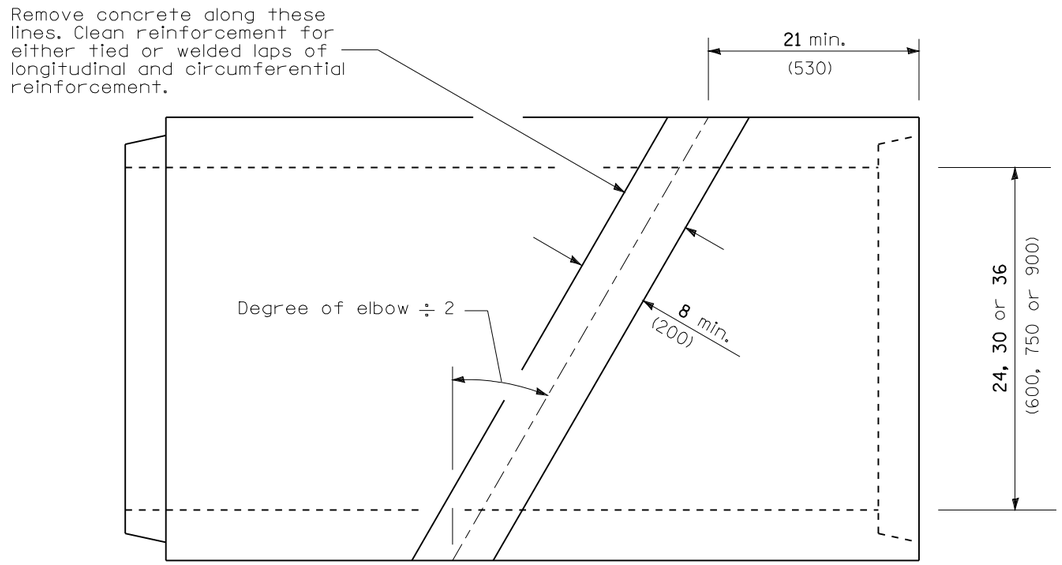

PLAN

(Reinforced concrete pipe)

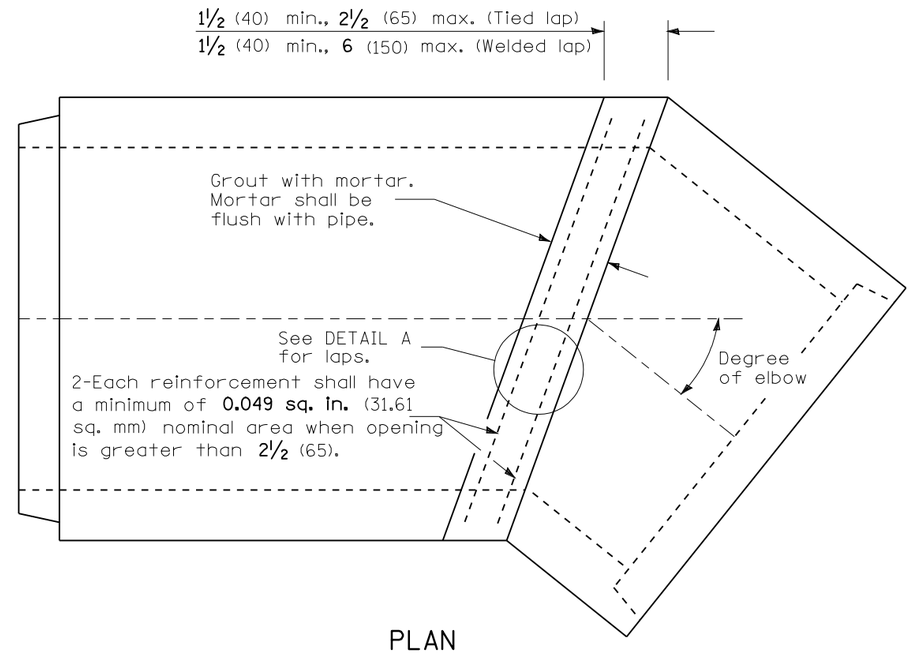

PLAN

(Reinforced concrete pipe elbow)

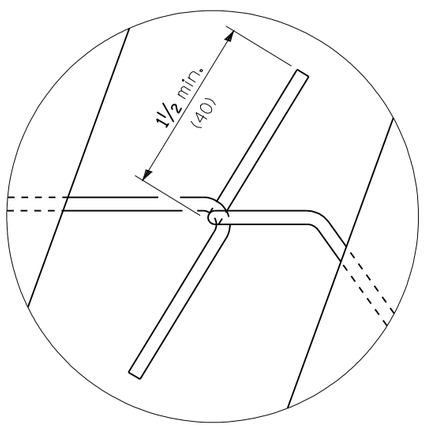

TIED LAP

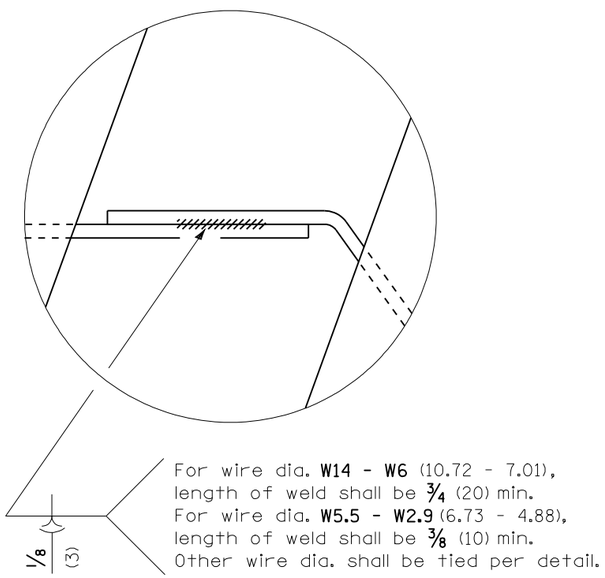

WELDED LAP

DETAIL A

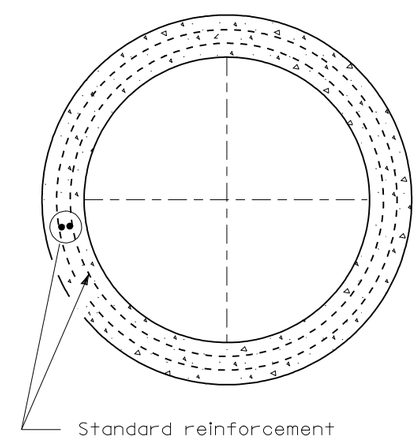

TRANSVERSE SECTION

All dimensions are in inches (millimeters) unless otherwise shown.

Illinois Department of Transportation

APPROVED January 1, 2010
ENGINEER OF POLICY AND PROCEDURES

APPROVED January 1, 2010
ENGINEER OF DESIGN AND ENVIRONMENT

ISSUED 1-1-97

DATE	REVISIONS
1-1-10	Corrected pipe diameter dimension lines.
1-1-09	Revised reinforcement at elbow. Switched units to English (metric).

REINFORCED CONCRETE PIPE ELBOW

STANDARD 542601-02

Inner cage cercumferential reinforcement = **0.01 sq. in./ft.** (212 mm²/m) (min.) longitudinal reinforcement is same as for **36** (900) riser.

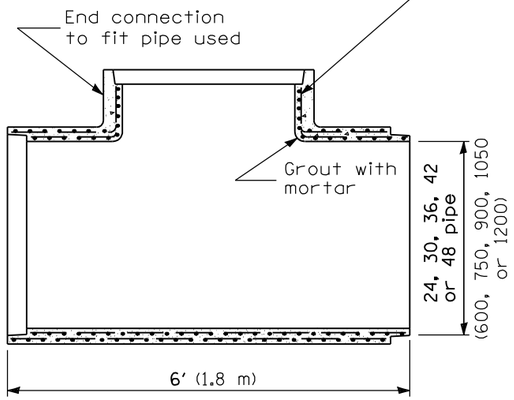

LONGITUDINAL SECTION

Remove concrete in existing pipe along this line. Clean reinforcement for either tied or welded laps of longitudinal and circumferential reinforcemnt per detail.

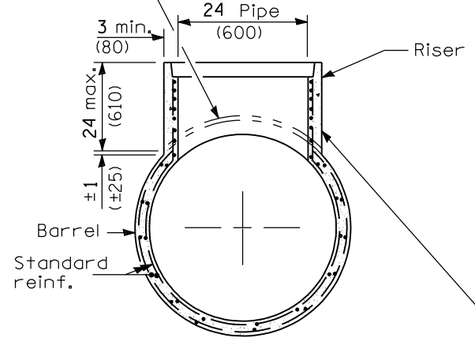

TRANSVERSE SECTION

Inner cage-circumference reinf. - **0.17 sq. in./ft.** (360 mm²/m) (min.) longitudinal reinf. = **0.049 sq. in./ft.** (104 mm²/m) (min.) spaced at **6** (150) cts. max. or equivalent to **W2.5** (4.496) spaced at **6** (150) cts.

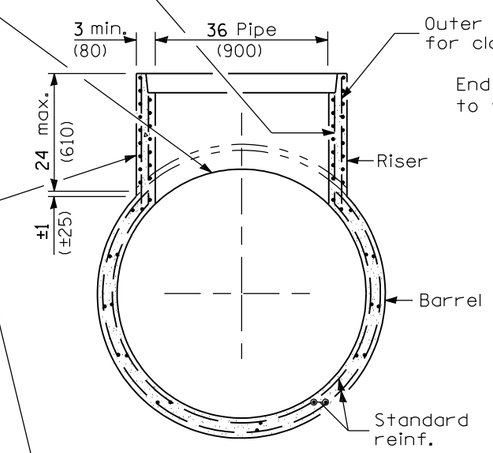

TRANSVERSE SECTION

Outer cage-standard reinforcement for class III pipe.

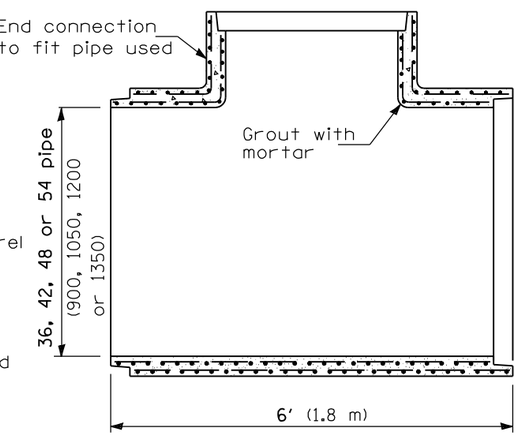

LONGITUDINAL SECTION

For wire **W12** thru **W2** (10.008 thru 7.188), length of weld shall be ¾ (20) min.
For wire **W5.5** thru **W2.5** (6.655 thru 4.496) length of weld shall be ⅜ (10) min.
Other wire gauges shall be tied per detail.

For **36** (900) pipe riser, weld outer reinforcement cage of barrel to outer reinforcement cage of riser.

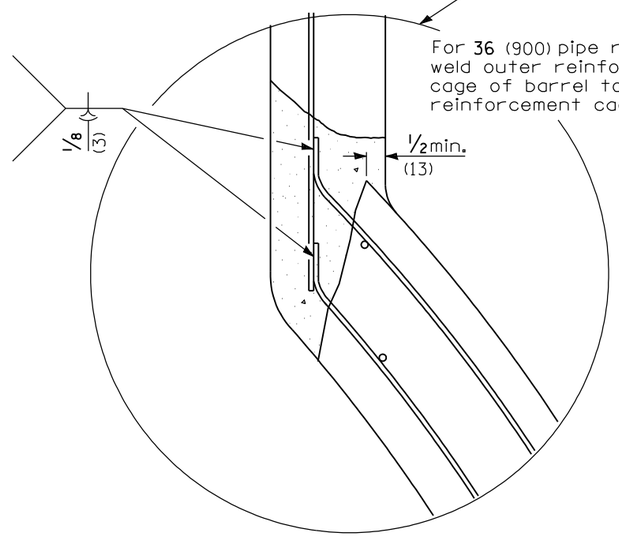

Welded Lap

For **24** (600) pipe riser, tie outer reinforcement cage of barrel to inner reinforcement cage of riser.

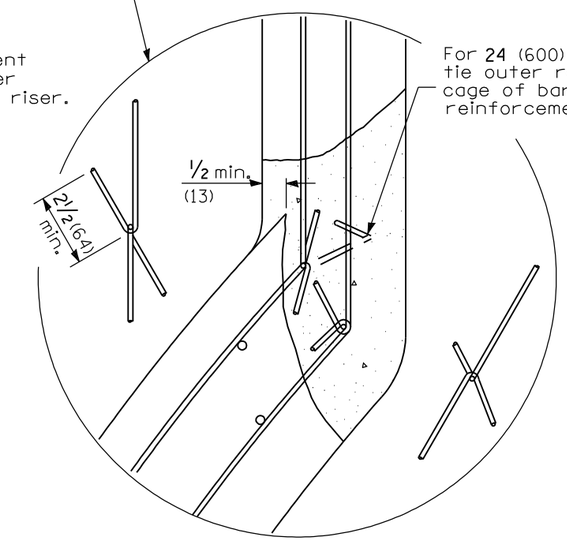

Tied Lap

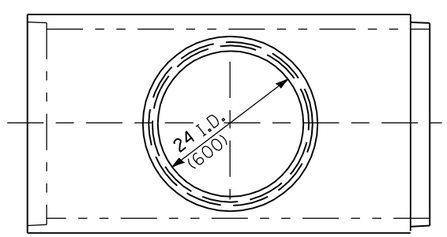

PLAN
Tee with 24 (600) Riser

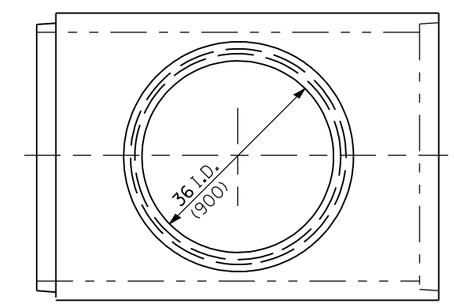

PLAN
Tee with 36 (900) Riser

All dimensions are in inches (millimeters) unless otherwise shown.

Illinois Department of Transportation

APPROVED January 1, 2009
ENGINEER OF POLICY AND PROCEDURES

APPROVED January 1, 2009
ENGINEER OF DESIGN AND ENVIRONMENT

ISSUED 1-1-97

DATE	REVISIONS
1-1-09	Switched units to English (metric).
1-1-97	Renum. Standard 2263-4.

REINFORCED CONCRETE PIPE TEE

STANDARD 542606-01

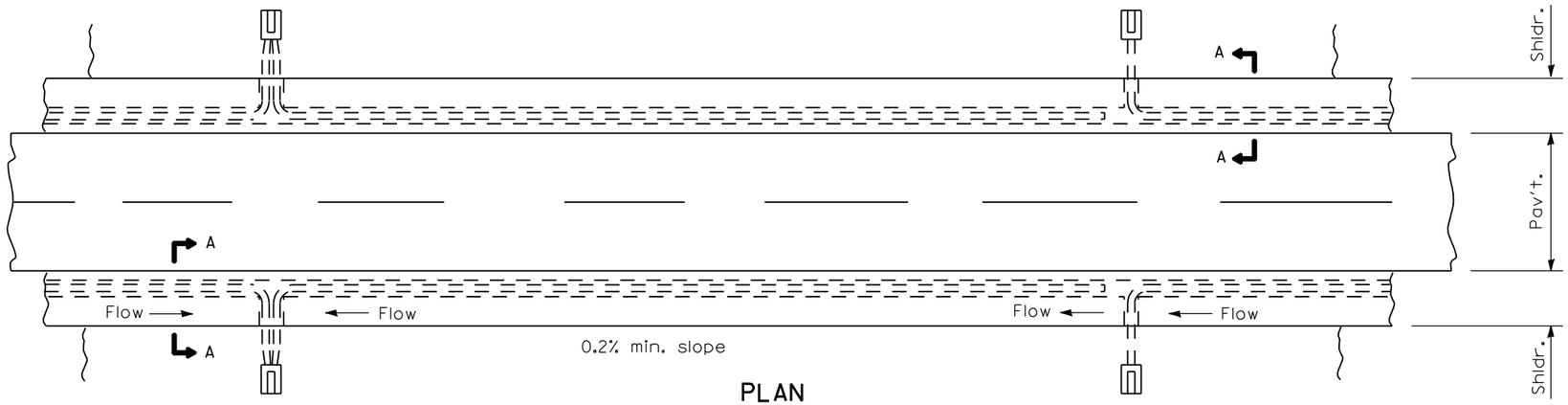

PLAN

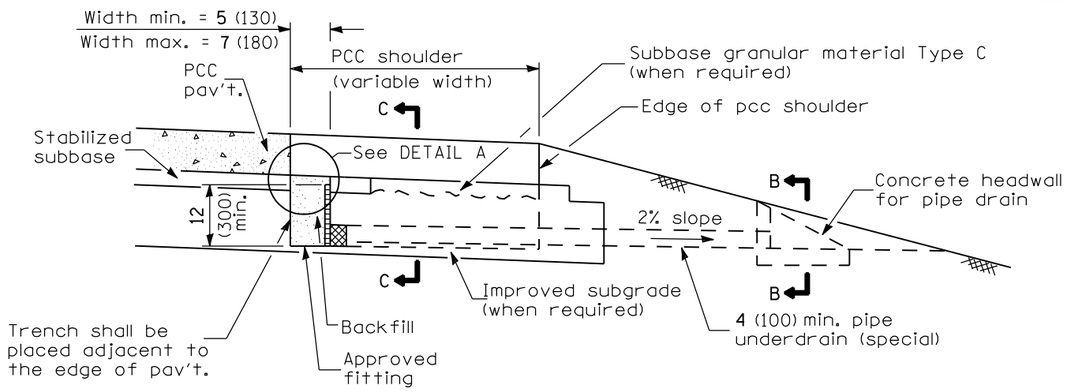

SECTION A-A

(PCC Shoulder)

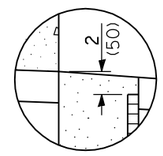

DETAIL A

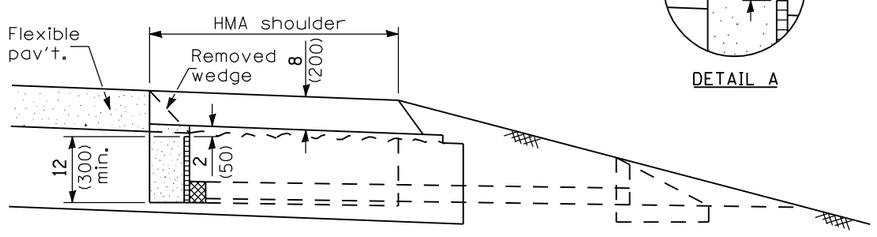

SECTION A-A

(HMA Shoulder)

(Dimensions and notes not shown shall be as shown in the above Section A-A)

NEW CONSTRUCTION
(TRENCH FOR DRAINAGE MAT UNDERDRAIN OPTION)

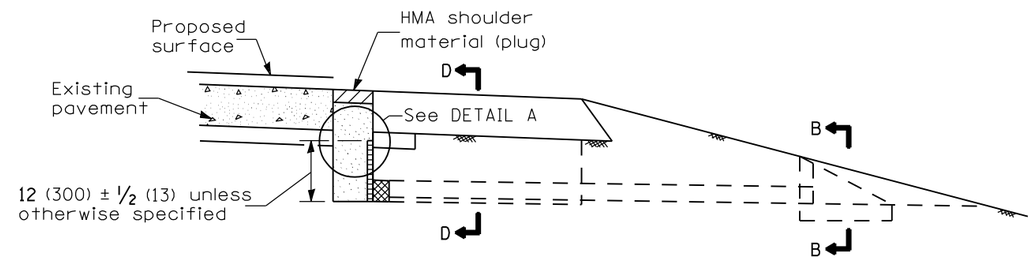

SECTION A-A

EXISTING CONSTRUCTION
(TRENCH FOR DRAINAGE MAT UNDERDRAIN OPTION)

(Except as noted or shown, dimensions and notes specified for Existing Construction are the same as those of New Construction)

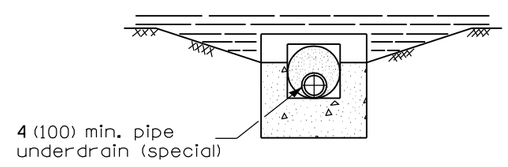

SECTION B-B

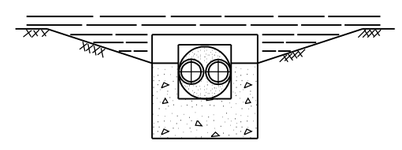

SECTION B-B

(Sag locations)

GENERAL NOTES

See Standard 601101 for details of concrete headwall.

See Standards 482001, 482006 and 483001 for details of shoulders not shown.

The 24 (600) radius on the drainage fitting is only a minimum. Larger radii meeting the approval of the Engineer may be substituted.

All dimensions are in inches (millimeters) unless otherwise shown.

Illinois Department of Transportation

PASSED January 1, 2009
ENGINEER OF POLICY AND PROCEDURES
APPROVED January 1, 2009
ENGINEER OF DESIGN AND ENVIRONMENT

ISSUED 1-1-97

DATE	REVISIONS
1-1-09	Switched units to English (metric).
1-1-08	Changed "FA-1 or FA-2" to Backfill.

SUB-SURFACE DRAINS

(Sheet 1 of 2)

STANDARD 601001-03

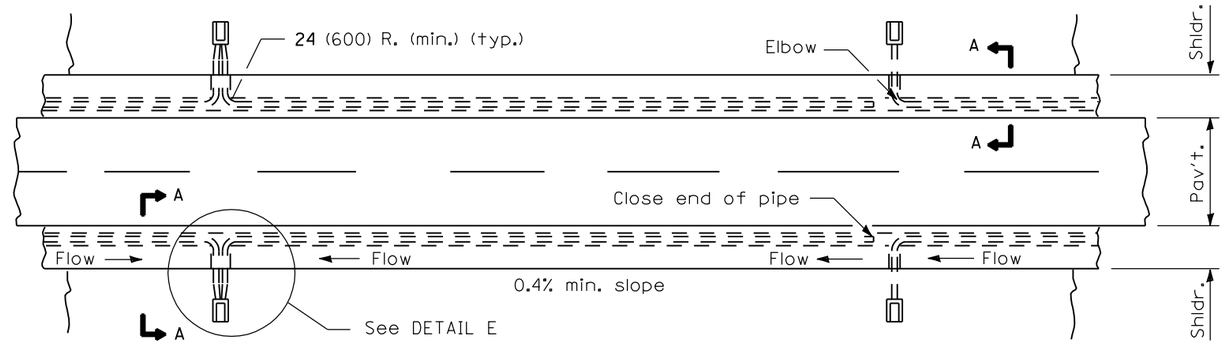

PLAN

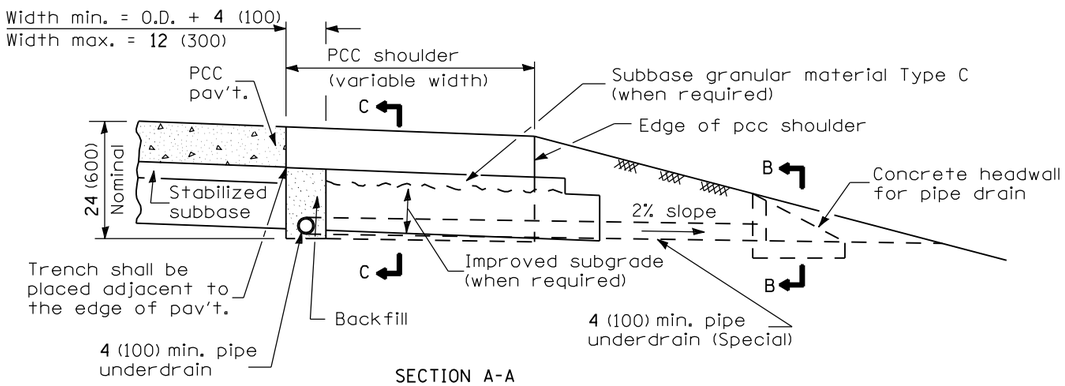

SECTION A-A

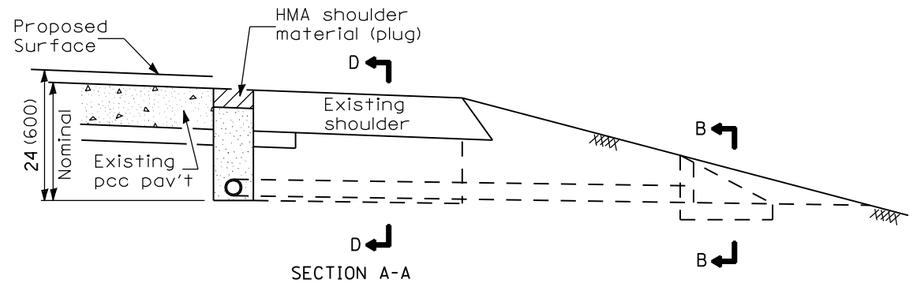

SECTION A-A

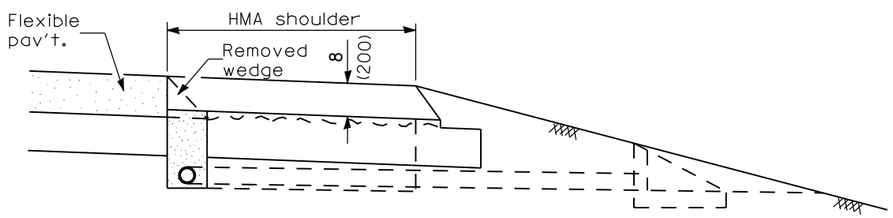

SECTION A-A

(Dimensions and notes not shown shall be as shown in the above Section A-A)

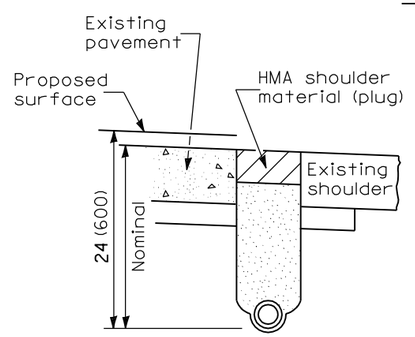

TRENCH FOR CORRUGATED POLYETHYLENE TUBING ALTERNATE

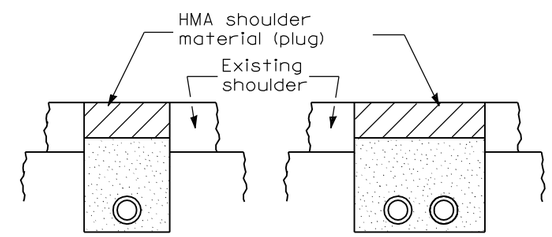

SECTION D-D

SECTION D-D
(Sag Locations)

EXISTING CONSTRUCTION

(Except as noted or shown, dimensions and notes specified for Existing Construction are the same as those of New Construction)

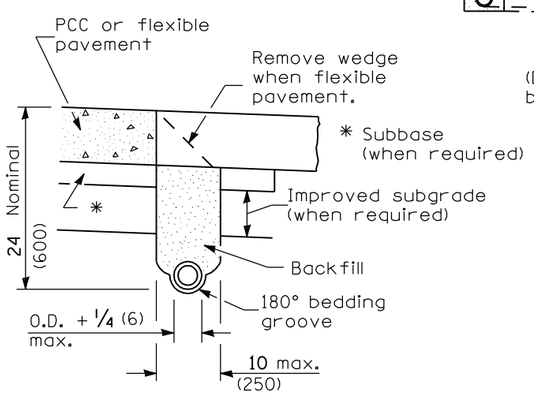

TRENCH FOR CORRUGATED POLYETHYLENE TUBING ALTERNATE

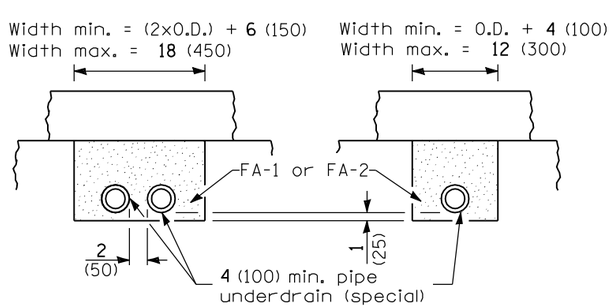

SECTION C-C
(Sag locations)

SECTION C-C

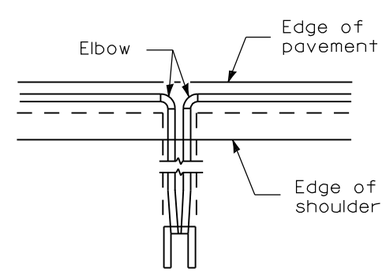

DETAIL E

NEW CONSTRUCTION

Illinois Department of Transportation

PASSED January 1, 2009
ENGINEER OF POLICY AND PROCEDURES

APPROVED January 1, 2009
ENGINEER OF DESIGN AND ENVIRONMENT

ISSUED 1-1-97

SUB-SURFACE DRAINS

(Sheet 2 of 2)

STANDARD 601001-03

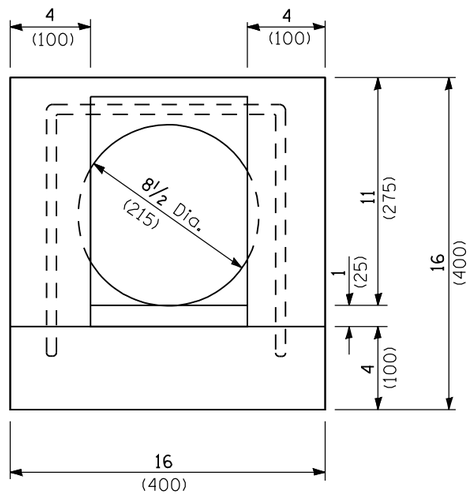

FRONT VIEW

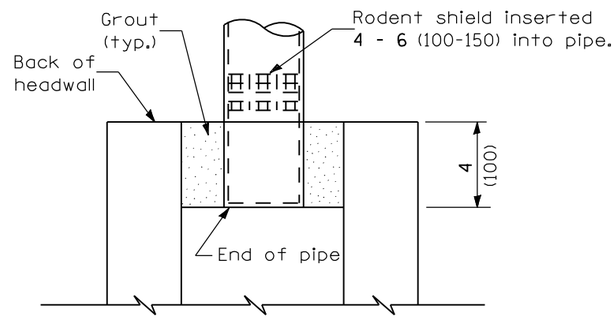

RODENT SHIELD PLACEMENT

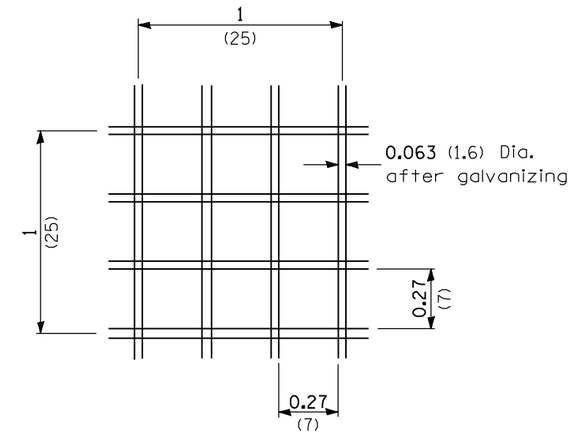

SECTION A-A

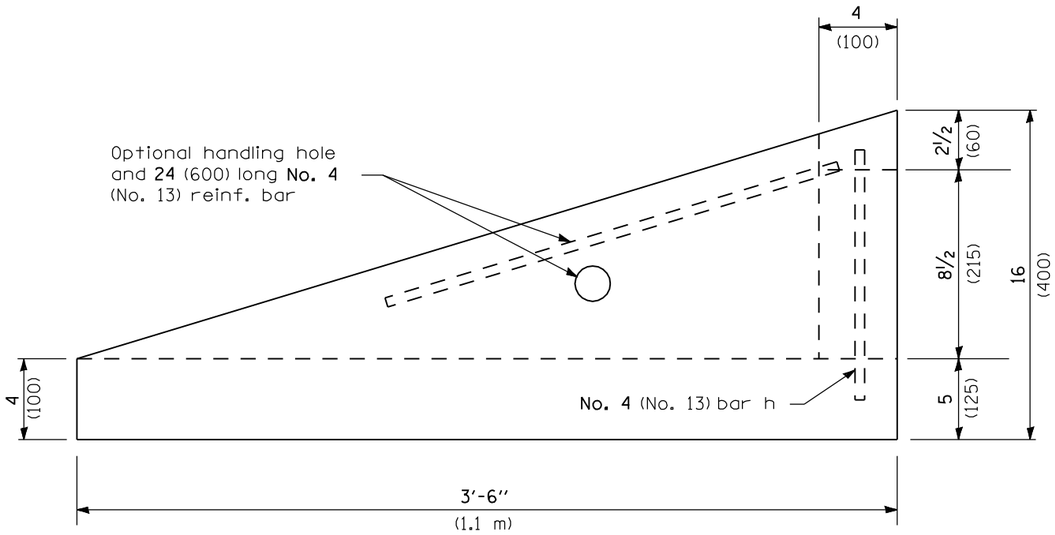

SIDE VIEW

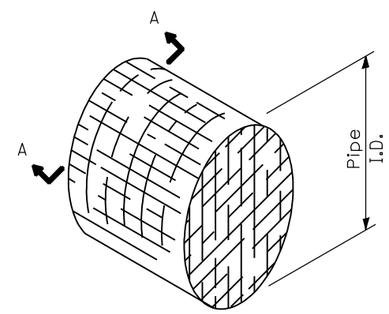

DETAIL OF RODENT SHIELD

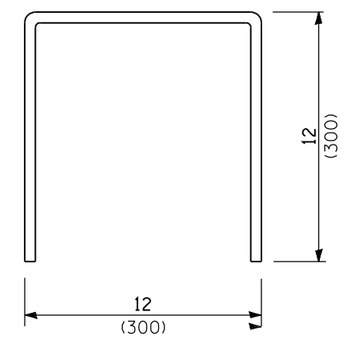

BAR h

GENERAL NOTES

An alternate paved invert meeting the approval of the Engineer may be substituted for that shown in side view.

All dimensions are in inches (millimeters) unless otherwise shown.

Illinois Department of Transportation

PASSED January 1, 2009
ENGINEER OF POLICY AND PROCEDURES

APPROVED January 1, 2009
ENGINEER OF DESIGN AND ENVIRONMENT

ISSUED 1-1-97

DATE	REVISIONS
1-1-09	Switched units to English (metric).
1-1-97	Renum. Standard 2362-4

CONCRETE HEADWALL FOR PIPE DRAIN

STANDARD 601101-01

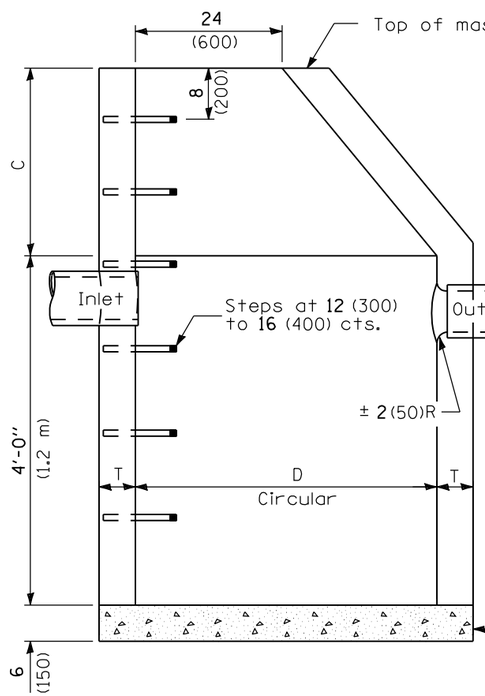

ELEVATION
(Standard Outlet)

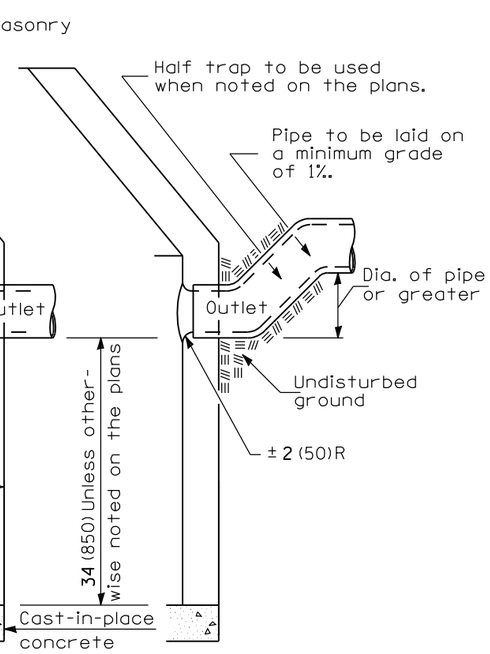

ELEVATION
(Half Trap)

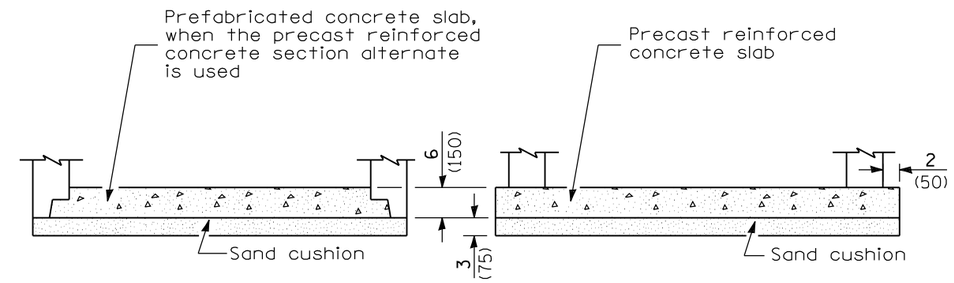

ALTERNATE BOTTOM SLAB

ALTERNATE MATERIALS FOR WALLS	D	C *	T (min.)
Concrete Masonry Unit	4'-0" (1.2 m) 5'-0" (1.5 m)	30 (750) 3'-9" (1.15 m)	5 (125) 5 (125)
Brick Masonry	4'-0" (1.2 m) 5'-0" (1.5 m)	30 (750) 3'-9" (1.15 m)	8 (200) 8 (200)
Precast Reinforced Concrete Section	4'-0" (1.2 m) 5'-0" (1.5 m)	30 (750) 3'-9" (1.15 m)	4 (100) 5 (125)
Cast-in-place Concrete	4'-0" (1.2 m) 5'-0" (1.5 m)	30 (750) 3'-9" (1.15 m)	6 (150) 6 (150)

* For precast reinforced concrete sections, dimension "C" may vary from the dimension given to plus 6 (150).

GENERAL NOTES

All catch basins shall be 4'-0" (1.2 m) in diameter unless otherwise noted on the plans.

See Standard 602601 for optional precast reinforced concrete flat slab top.

See Standard 602701 for details of steps.

All dimensions are in inches (millimeters) unless otherwise shown.

Illinois Department of Transportation

PASSED January 1, 2009
ENGINEER OF POLICY AND PROCEDURES

APPROVED January 1, 2009
ENGINEER OF DESIGN AND ENVIRONMENT

ISSUED 1-1-97

DATE	REVISIONS
1-1-09	Switched units to
	English (metric).
1-1-97	Renum. Standard 1514-10.

CATCH BASIN TYPE A

STANDARD 602001-01

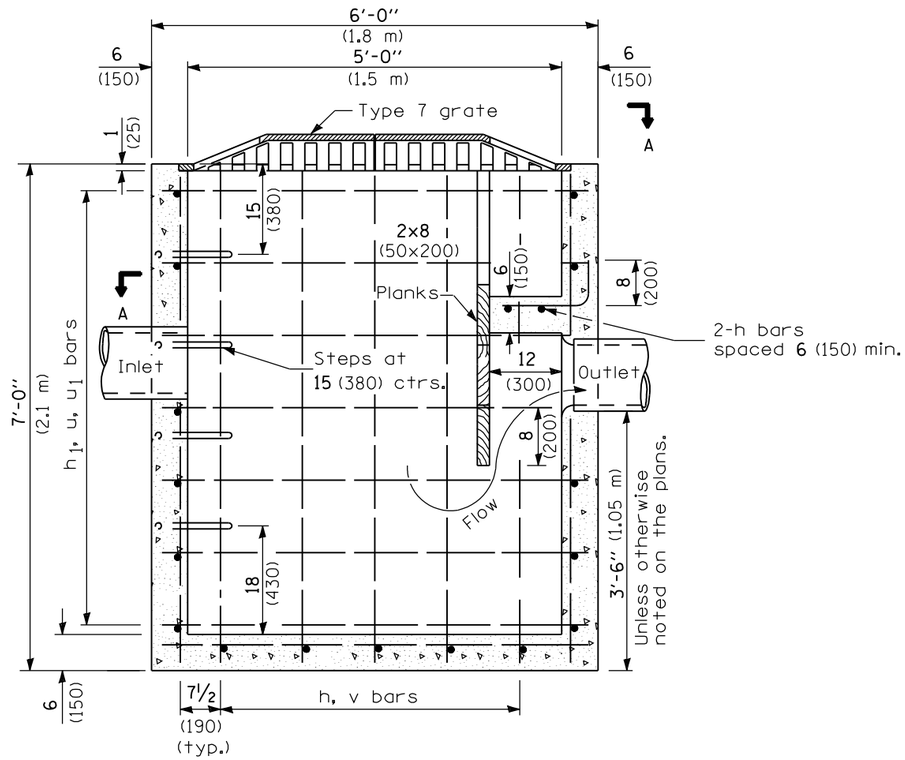

ELEVATION

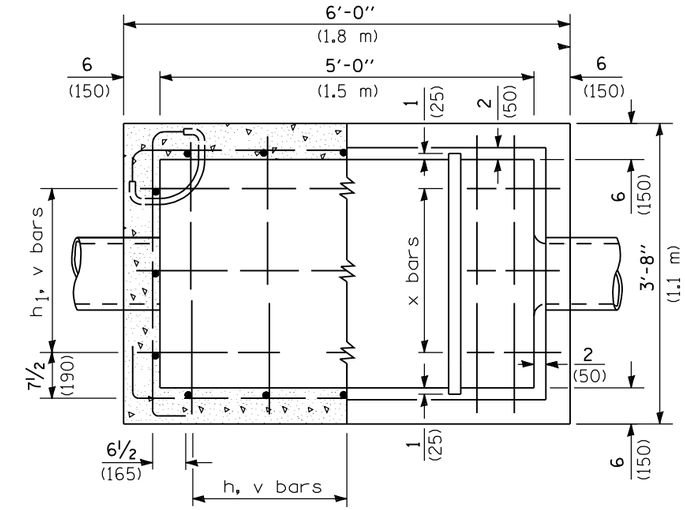

SECTION A-A

(Grating removed to show plan of baffles.)

MATERIALS REQUIRED FOR ONE (1)
TYPE B CATCH BASIN

Bar	Qty.	Size	Shape	Length
h	7	No. 4 (No. 13)		3'-5" (1.02 m)
h_1	3	No. 4 (No. 13)		5'-9" (1.72 m)
u	14	No. 4 (No. 13)		7'-0" (2.10 m)
u_1	14	No. 4 (No. 13)		4'-6" (1.35 m)
v	16	No. 4 (No. 13)		6'-9" (2.02 m)
x	3	No. 4 (No. 13)		1'-11" (580)
Concrete			cu. yd. (m^3)	2.5 (1.90)
Reinforcement bars			lbs. (kg)	210 (95)

All bars shall be at 12 (300) centers unless otherwise shown. Reinforcement bar clearance shall be 1½ (40).

GENERAL NOTES

See Standard 602701 for details of steps.

All dimensions are in inches (millimeters) unless otherwise shown.

Illinois Department of Transportation

PASSED January 1, 2009
ENGINEER OF POLICY AND PROCEDURES
APPROVED January 1, 2009
ENGINEER OF DESIGN AND ENVIRONMENT

ISSUED 1-1-97

DATE	REVISIONS
1-1-09	Switched units to English (metric).
1-1-07	Soft converted metric reinforcement bars.

CATCH BASIN TYPE B

STANDARD 602006–02

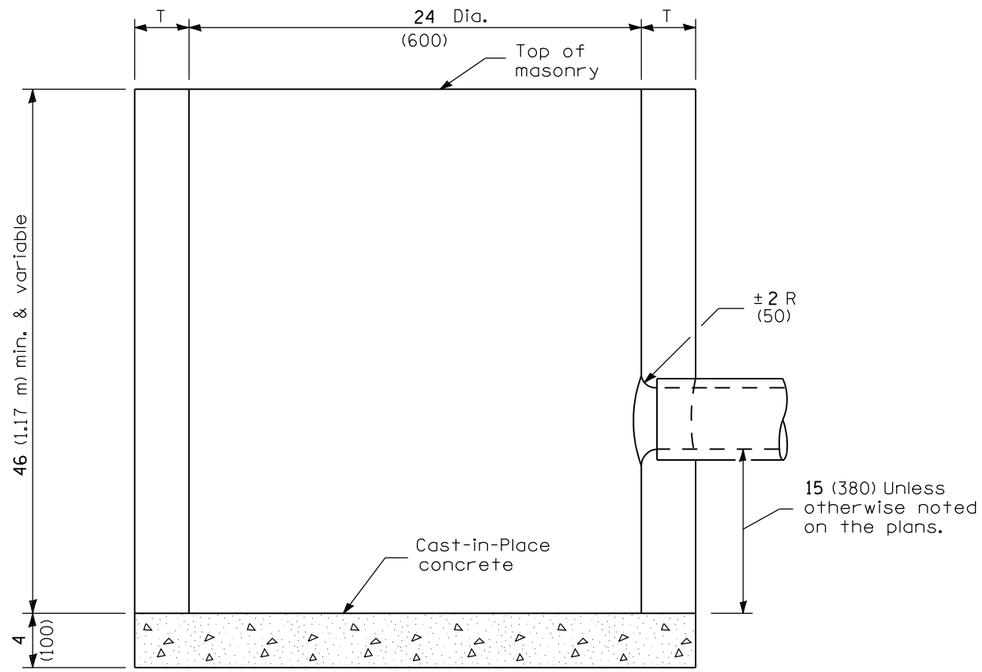

ELEVATION

ALTERNATE MATERIALS FOR WALLS	T (min)
Precast Reinforced Concrete Section	3 (75)
Concrete Masonry Unit	5 (125)
Cast-in-Place Concrete	6 (150)
Brick Masonry	8 (200)

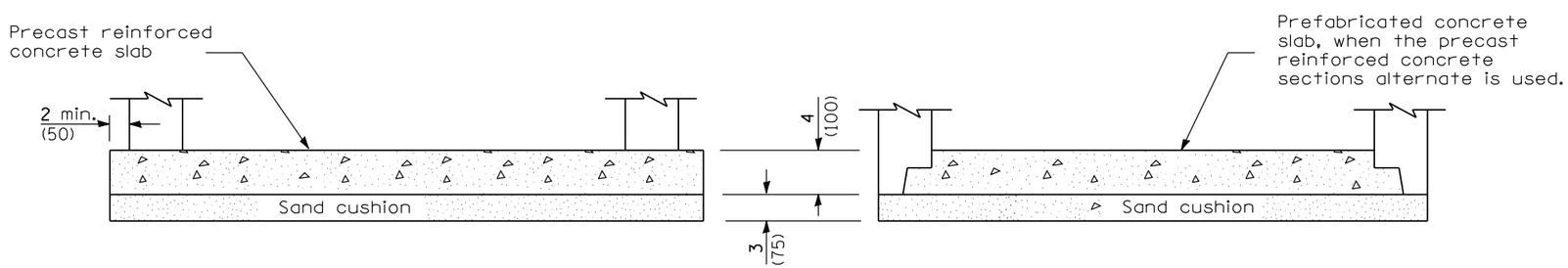

ALTERNATE BOTTOM SLAB

All dimensions are in inches (millimeters) unless otherwise shown.

Illinois Department of Transportation

PASSED January 1, 2009
ENGINEER OF POLICY AND PROCEDURES
APPROVED January 1, 2009
ENGINEER OF DESIGN AND ENVIRONMENT

ISSUED 1-1-97

DATE	REVISIONS
1-1-09	Switched units to English (metric).
1-1-97	Renum. Standard 1538-6.

CATCH BASIN TYPE C

STANDARD 602011-01

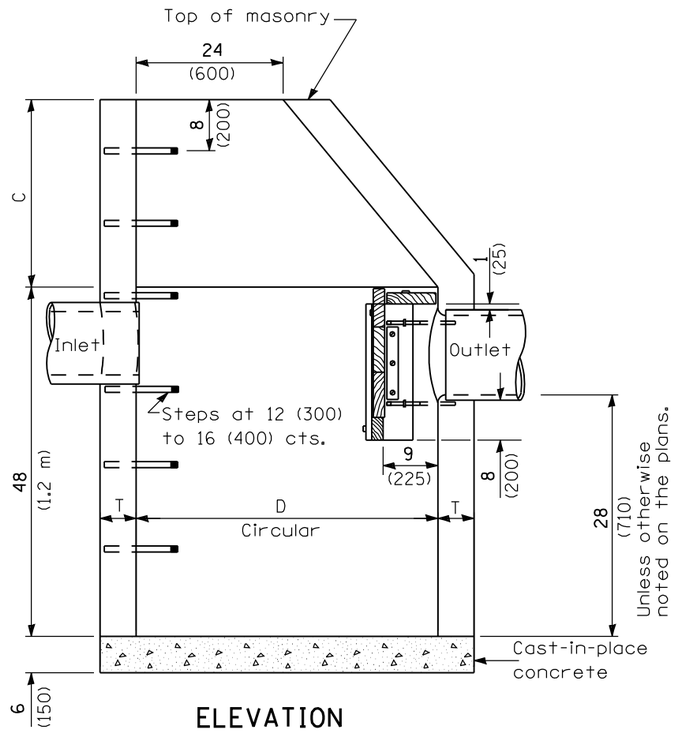

ELEVATION

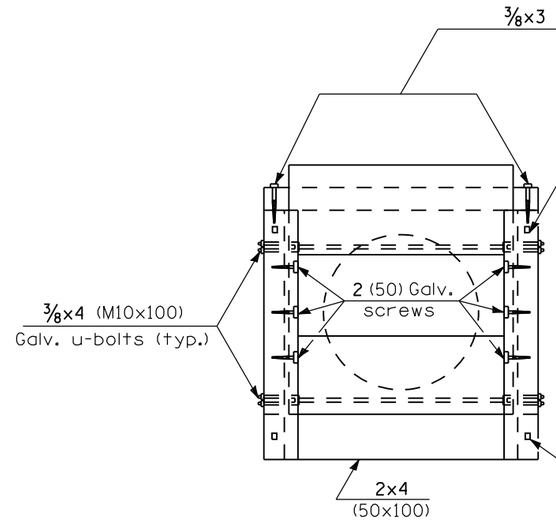

ELEVATION

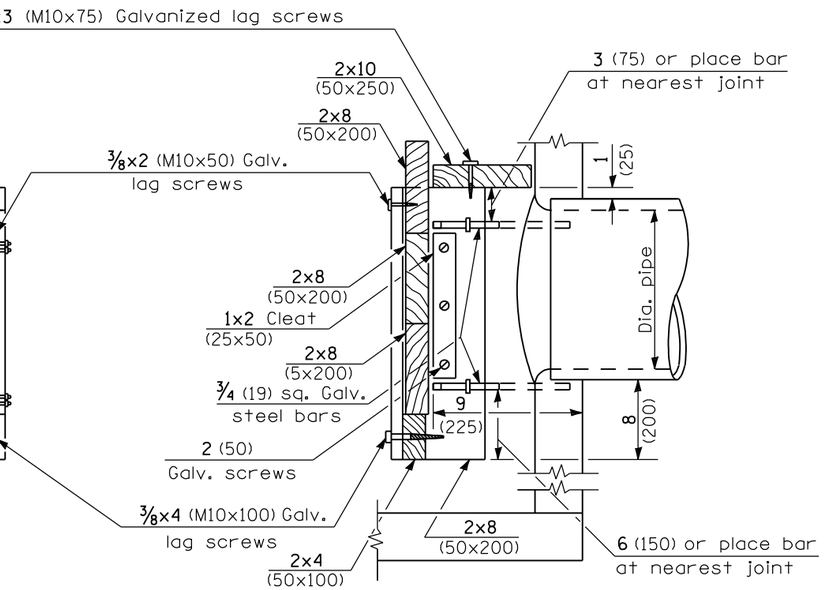

SECTION A-A

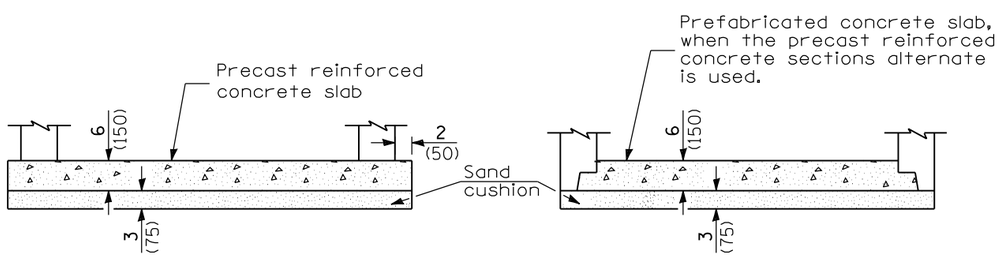

ALTERNATE BOTTOM SLAB

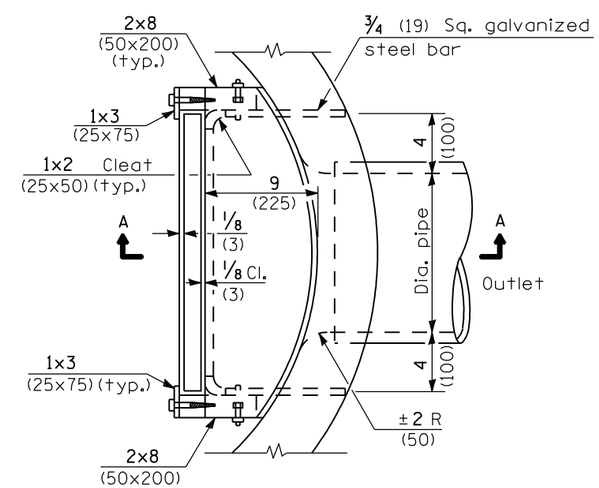

PLAN

ALTERNATE MATERIALS FOR WALLS	D	C*	T (min.)
Concrete Masonry Unit	36 (900) 4'-0" (1.20 m)	15 (380) 30 (760)	5 (125) 5 (125)
Brick Masonry	36 (900) 4'-0" (1.20 m)	15 (380) 30 (760)	8 (200) 8 (200)
Precast Reinforced Concrete Section	36 (900) 4'-0" (1.20 m)	15 (380) 30 (760)	3 (75) 4 (100)
Cast-in-Place Concrete	36 (900) 4'-0" (1.20 m)	15 (380) 30 (760)	6 (150) 6 (150)

* For precast reinforced concrete sections, dimension "C" may vary from the dimension given to plus 6 (150).

GENERAL NOTES

All catch basins shall be 4'-0" (1.2 m) in diameter unless otherwise noted on the plans.

See Standard 602701 for details of steps.

See Standard 602601 for optional precast reinforced concrete flat slab top.

All dimensions are in inches (millimeters) unless otherwise shown.

Illinois Department of Transportation

PASSED January 1, 2009
ENGINEER OF POLICY AND PROCEDURES

APPROVED January 1, 2009
ENGINEER OF DESIGN AND ENVIRONMENT

ISSUED 1-1-97

DATE	REVISIONS
1-1-09	Switched units to English (metric).
1-1-97	Renum. Standard 1886-9. Revised 1st G.N.

CATCH BASIN TYPE D

STANDARD 602016-01

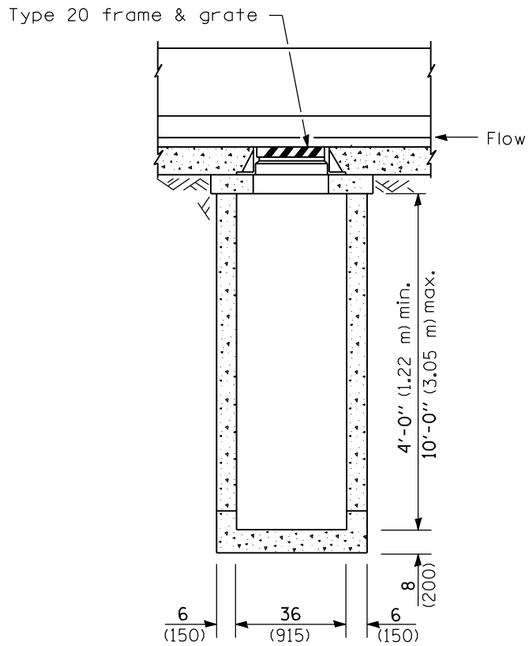

FRONT ELEVATION - TYPE 1

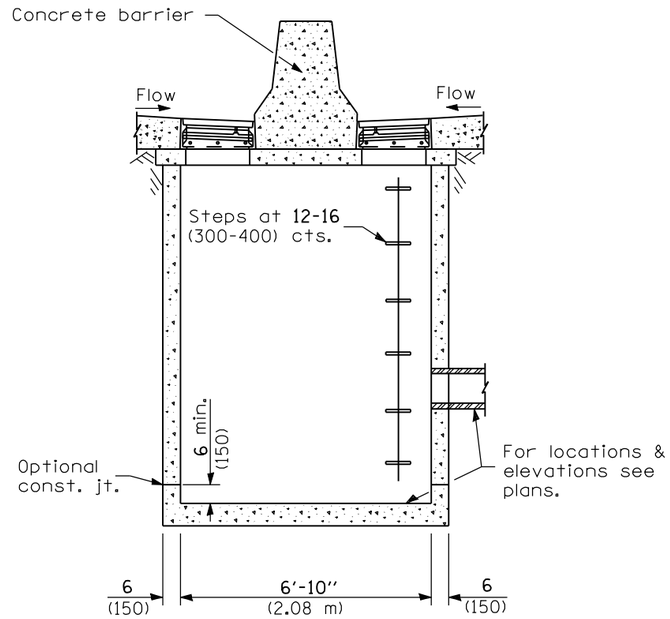

SIDE ELEVATION - TYPE 1 & 2

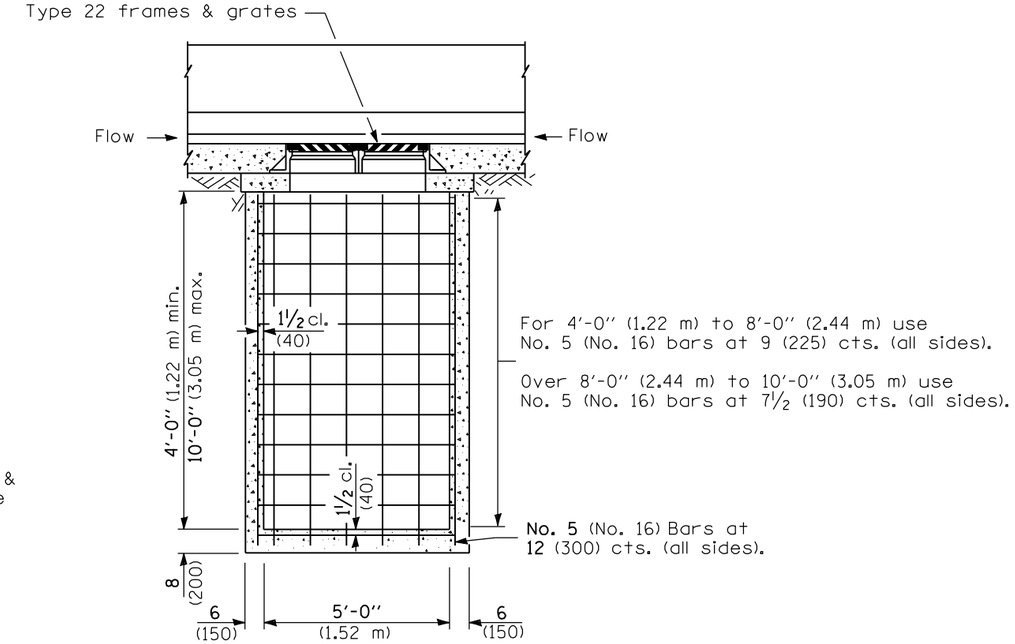

FRONT ELEVATION - TYPE 2

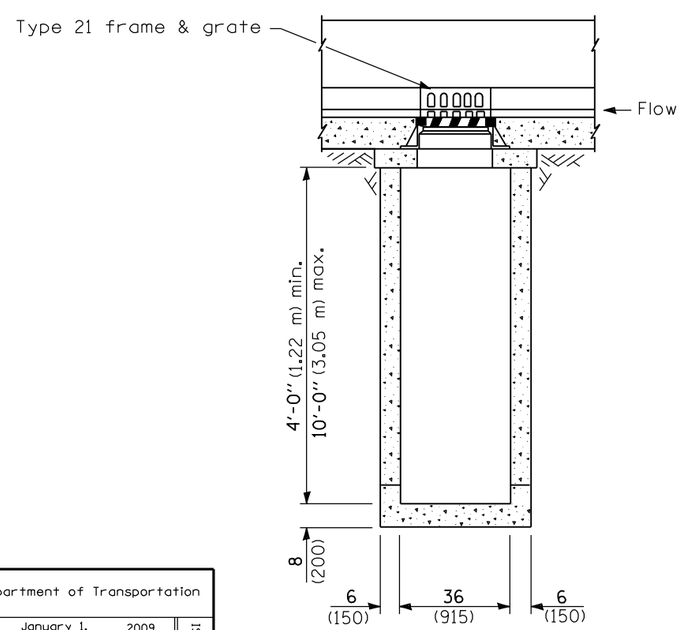

FRONT ELEVATION - TYPE 3

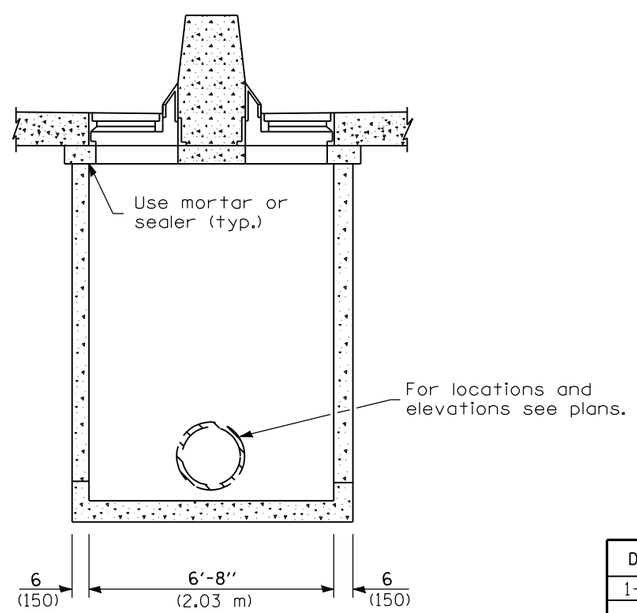

SIDE ELEVATION - TYPE 3

GENERAL NOTES

These structures are for use with concrete barrier, double face, 32 (815) height (Standard 637001).

The reinforcement shown in the front elevation of the Type 2 is typical for both elevations of all types.

See Standard 602701 for details of steps.

Exposed edges shall be beveled ¾ (19).

All dimensions are in inches (millimeters) unless otherwise shown.

Illinois Department of Transportation

PASSED January 1, 2009
ENGINEER OF POLICY AND PROCEDURES
APPROVED January 1, 2009
ENGINEER OF DESIGN AND ENVIRONMENT

ISSUED 1-1-97

DATE	REVISIONS
1-1-09	Switched units to English (metric).
4-1-04	Revised to fit Fshape barrier.

DRAINAGE STRUCTURES TYPES 1, 2 & 3

(Sheet 1 of 2)

STANDARD 602101-02

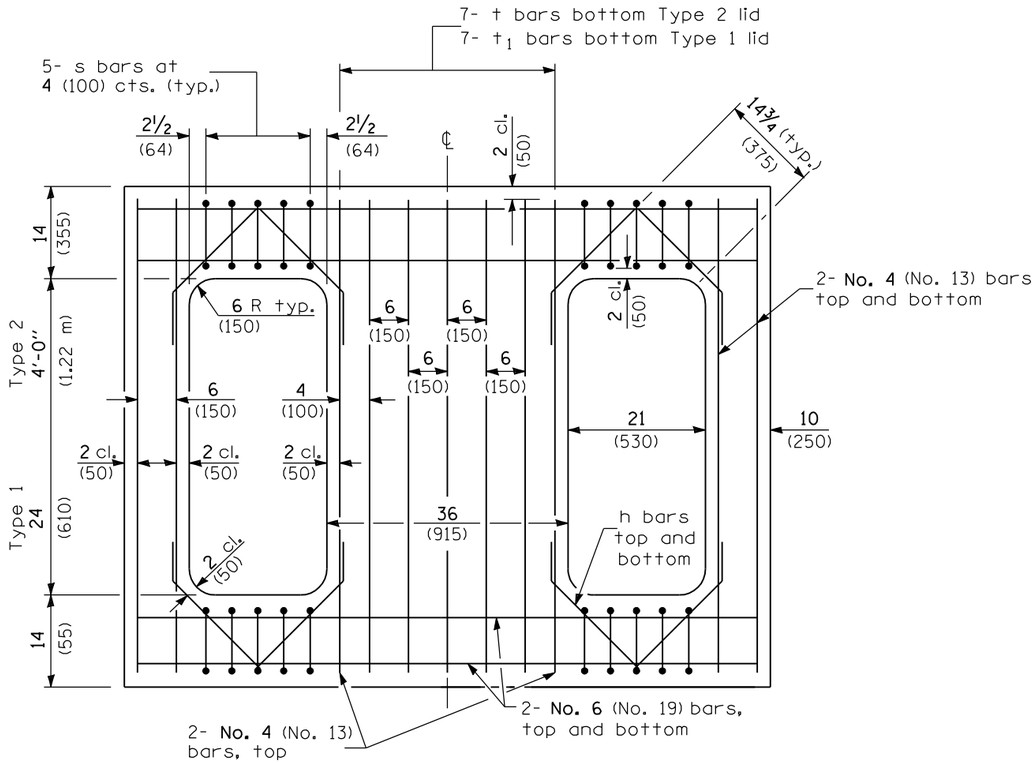

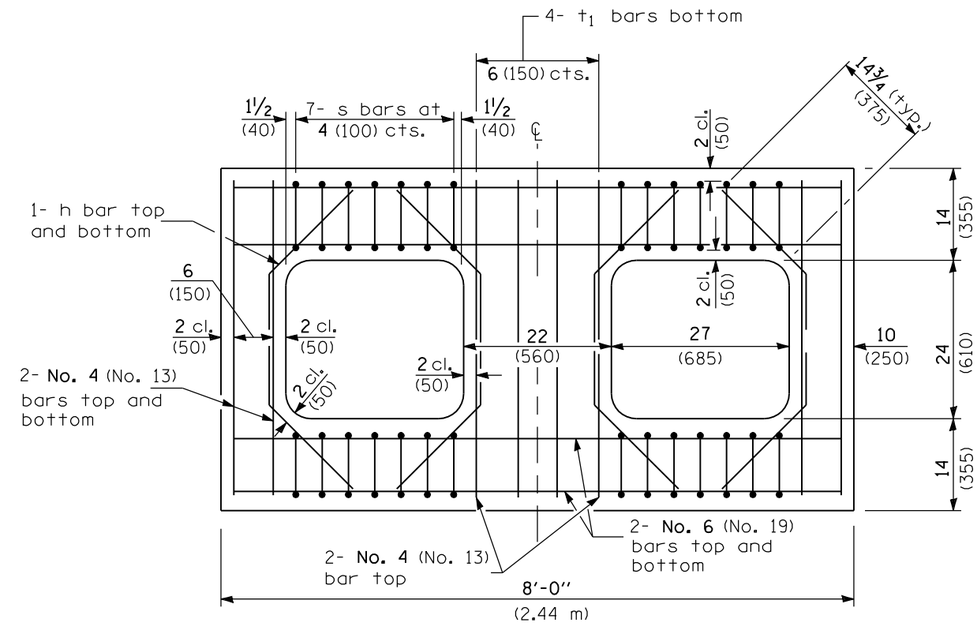

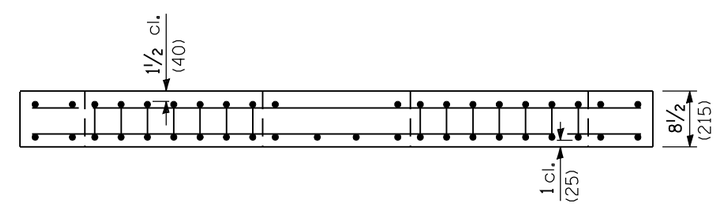

REINFORCED LID - TYPE 3

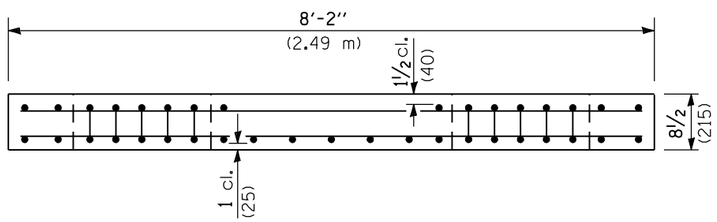

REINFORCED LID - TYPE 1 & 2

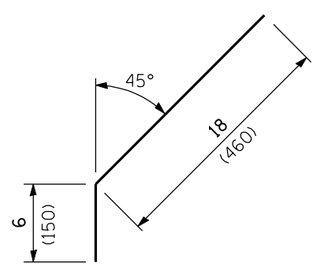

No. 4 (No. 13) Bar h

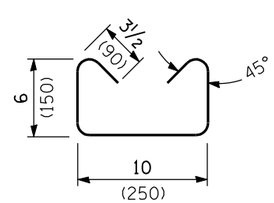

No. 3 (No. 10) Bar s

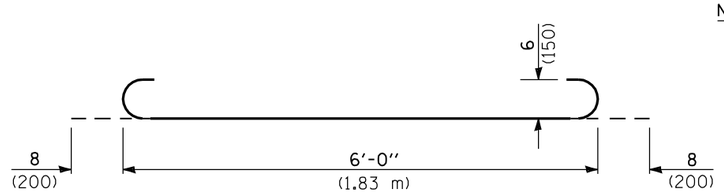

No. 6 (No. 19) Bar t

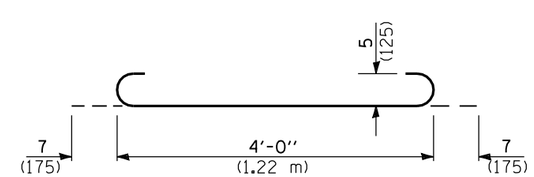

No. 5 (No. 16) Bar t_1

Illinois Department of Transportation

PASSED January 1, 2009
ENGINEER OF POLICY AND PROCEDURES

APPROVED January 1, 2009
ENGINEER OF DESIGN AND ENVIRONMENT

ISSUED 1-1-97

DRAINAGE STRUCTURES TYPES 1, 2 & 3

(Sheet 2 of 2)

STANDARD 602101-02

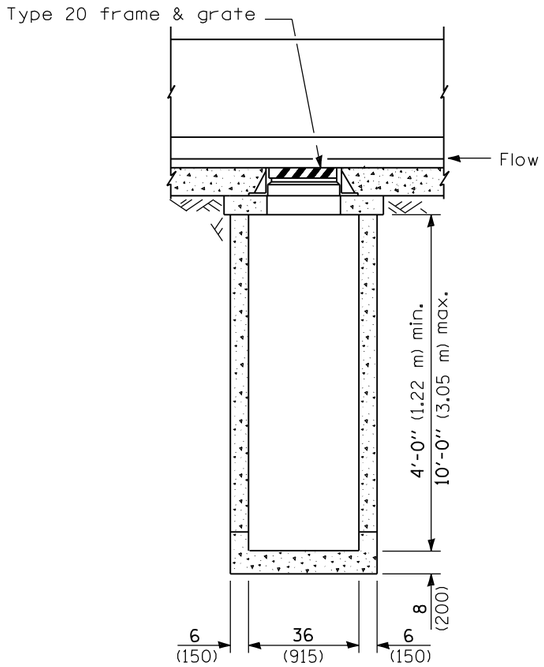

FRONT ELEVATION - TYPE 4

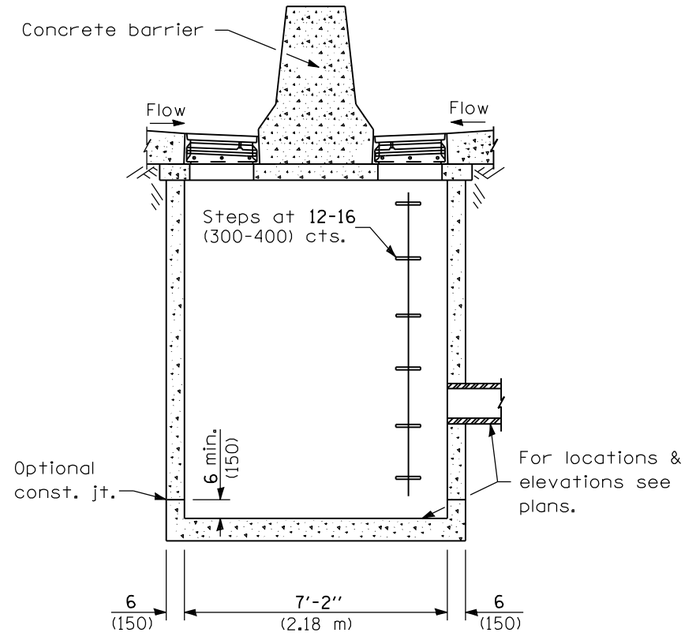

SIDE ELEVATION - TYPE 4 & 5

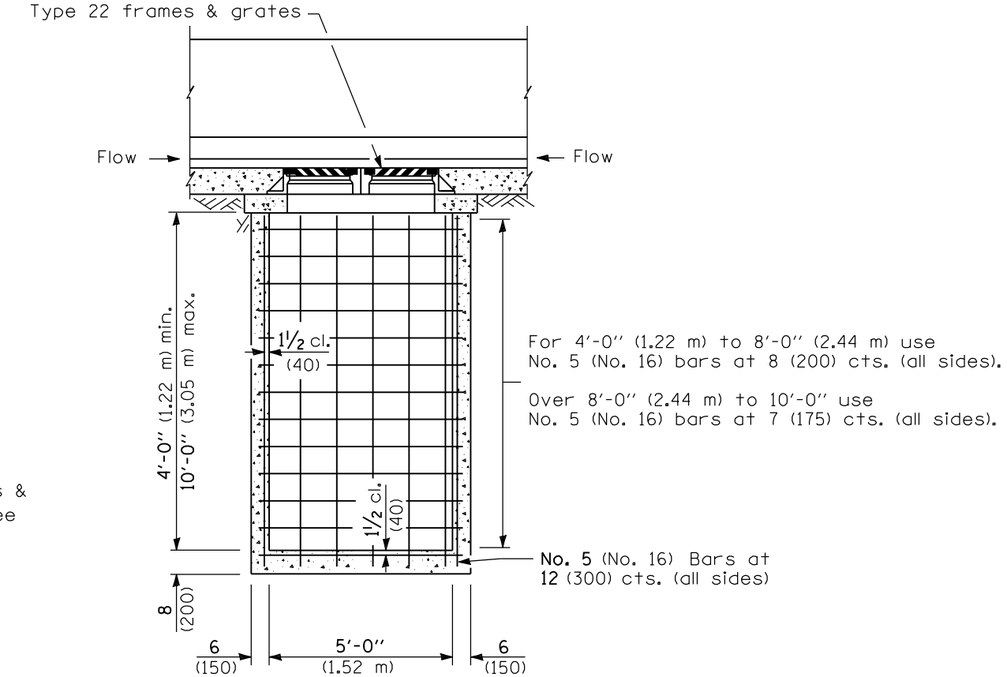

FRONT ELEVATION - TYPE 5

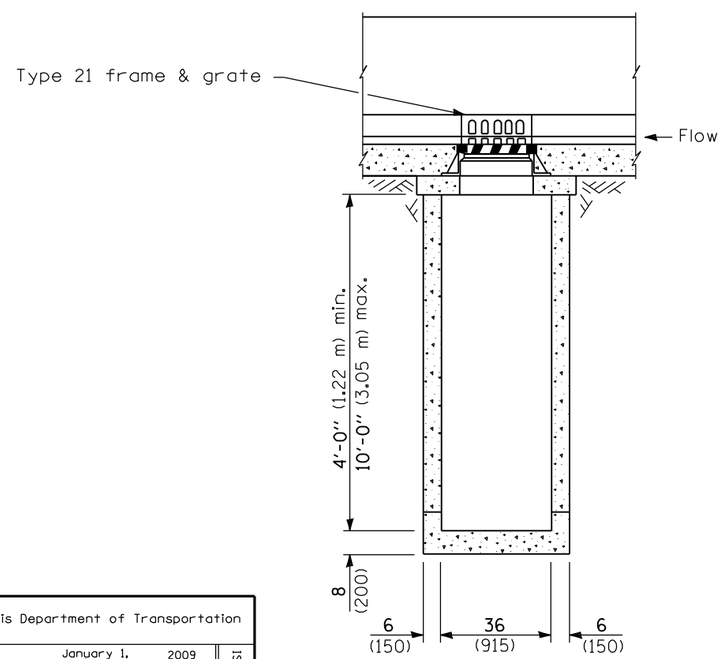

FRONT ELEVATION - TYPE 6

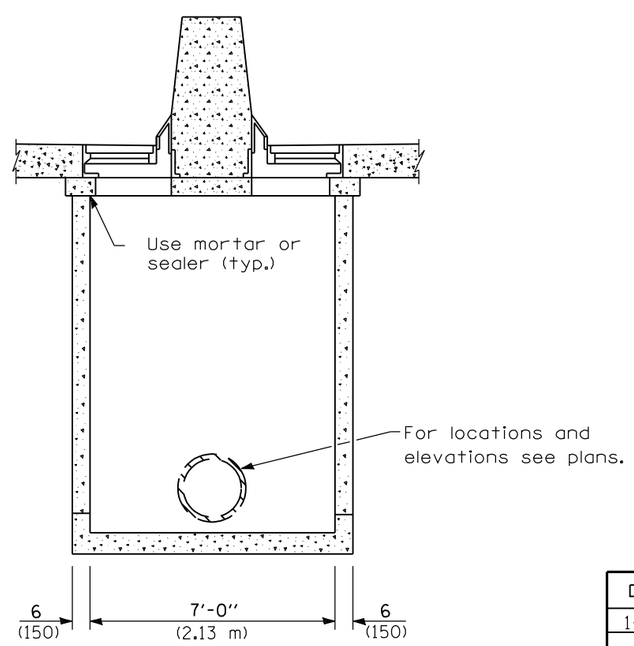

SIDE ELEVATION - TYPE 6

GENERAL NOTES

These structures are for use with concrete barrier, double face, 42 (1065) height (Standard 637006).

The reinforcement shown in the front elevation of the Type 5 is typical for both elevations of all types.

See Standard 602701 for details of steps.

Exposed edges shall be beveled ¾ (19).

All dimensions are in inches (millimeters) unless otherwise shown.

Illinois Department of Transportation

PASSED January 1, 2009
ENGINEER OF POLICY AND PROCEDURES

APPROVED January 1, 2009
ENGINEER OF DESIGN AND ENVIRONMENT

ISSUED 4-1-04

DATE	REVISIONS
1-1-09	Switched units to English (metric).
1-1-04	New standard

DRAINAGE STRUCTURES TYPES 4, 5 & 6

(Sheet 1 of 2)

STANDARD 602106-01

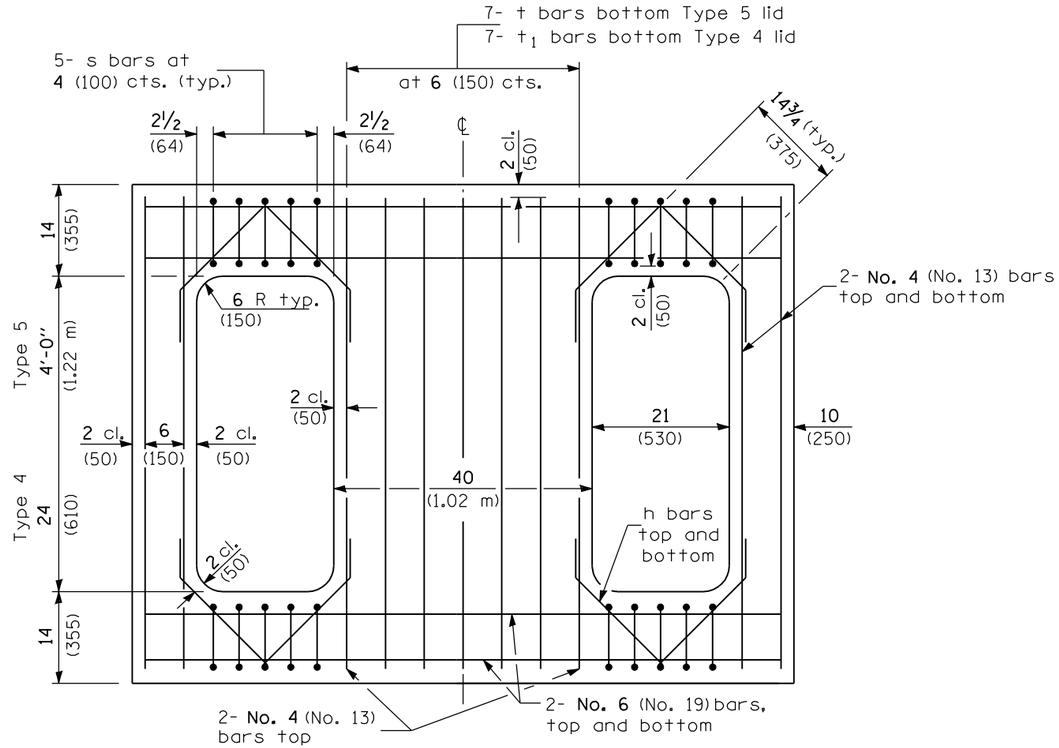

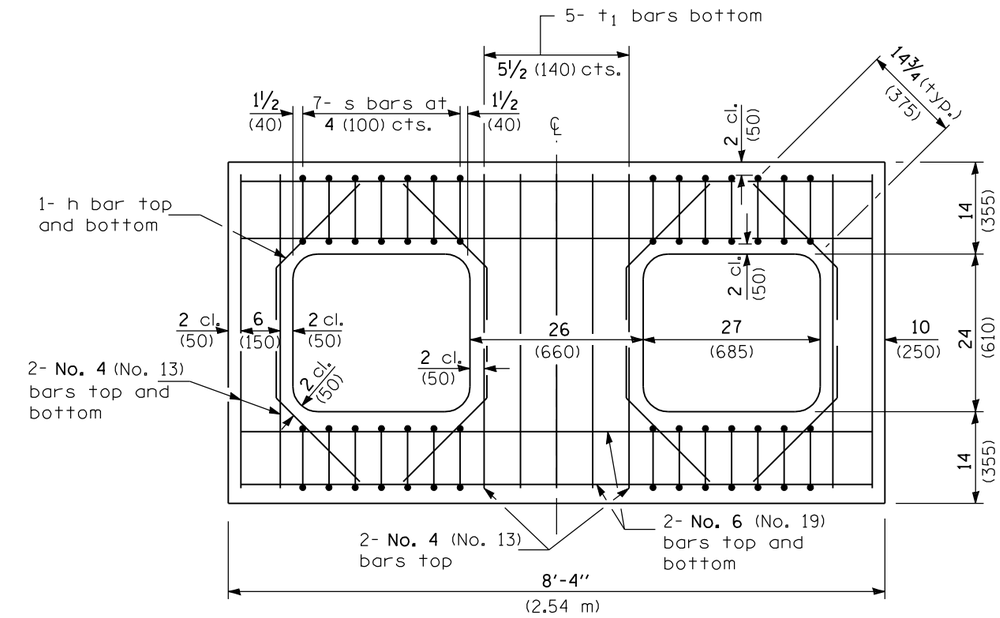

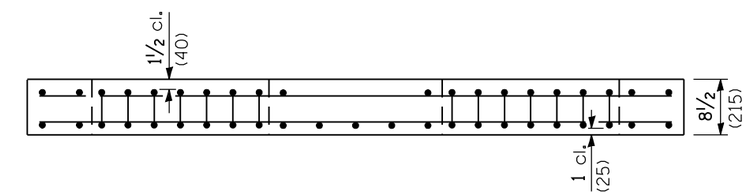

REINFORCED LID - TYPE 6

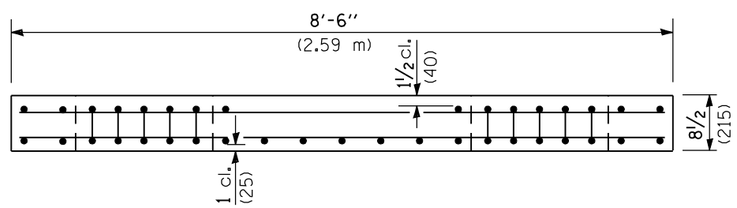

REINFORCED LID - TYPE 4 & 5

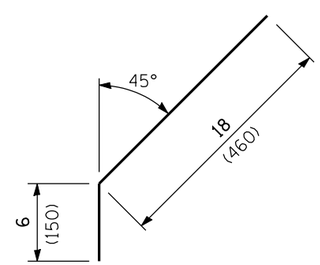

No. 4 (No. 13) Bar h

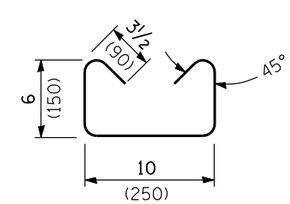

No. 3 (No. 10) Bar s

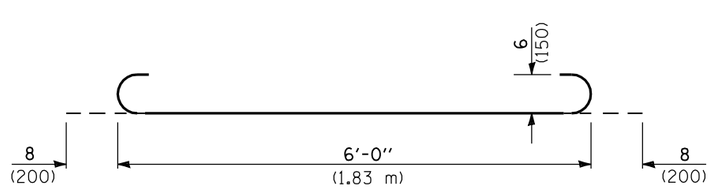

No. 6 (No. 19) Bar t

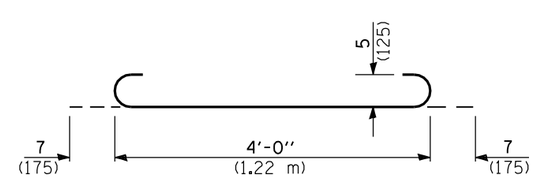

No. 5 (No. 16) Bar t_1

Illinois Department of Transportation

PASSED January 1, 2009
ENGINEER OF POLICY AND PROCEDURES

APPROVED January 1, 2009
ENGINEER OF DESIGN AND ENVIRONMENT

ISSUED 4-1-04

DRAINAGE STRUCTURES TYPES 4, 5 & 6

(Sheet 2 of 2)

STANDARD 602106-01

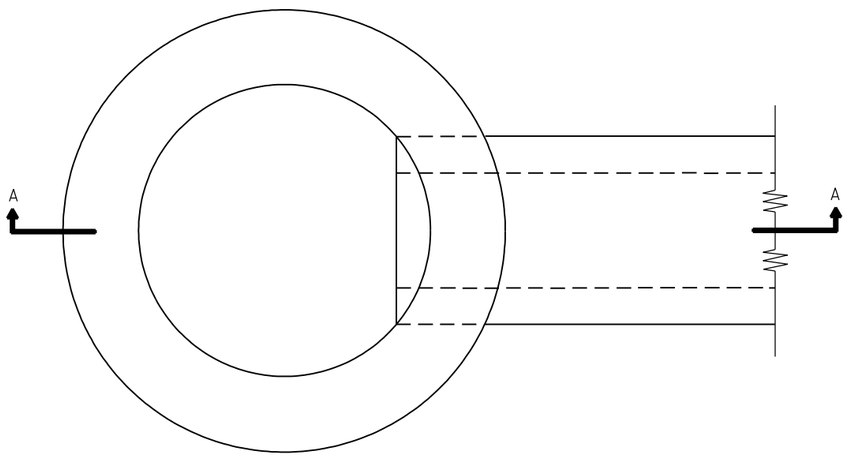

PLAN

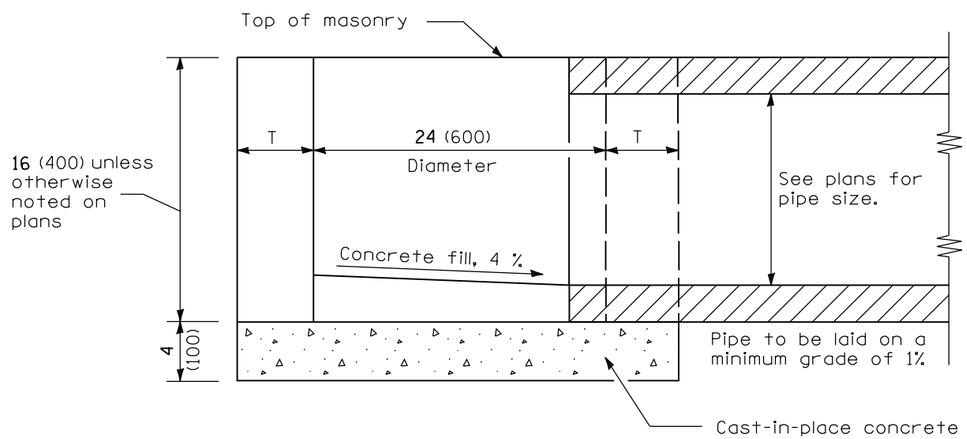

SECTION A-A

ALTERNATE MATERIALS FOR WALLS	T
BRICK MASONRY	8 (200)
CAST-IN-PLACE CONCRETE	6 (150)
CONCRETE MASONRY UNIT	5 (125)
PRECAST REINFORCED CONCRETE SECTION	3 (75)

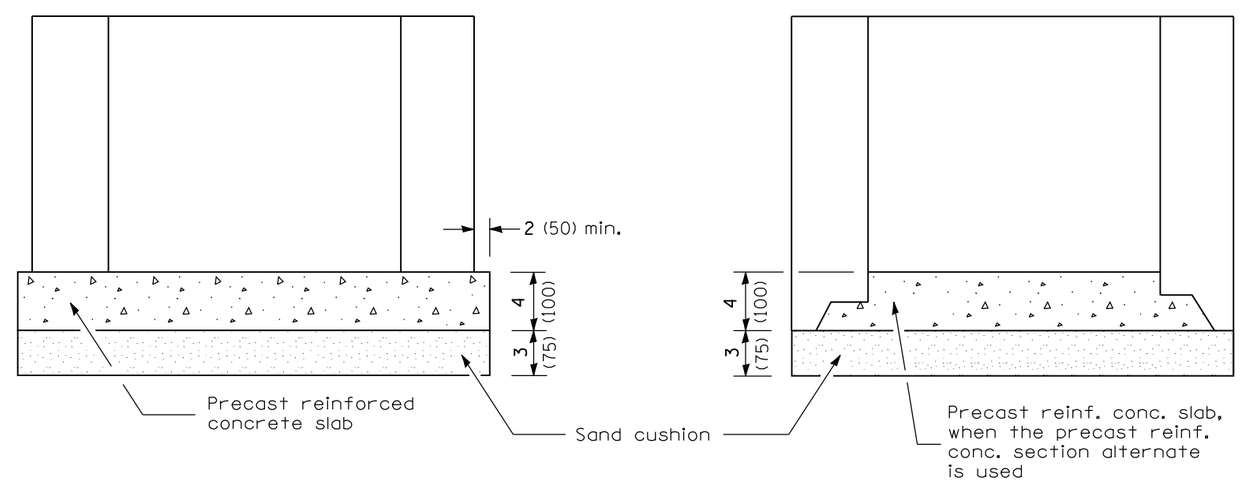

ALTERNATE METHODS

All dimensions are in inches (millimeters) unless otherwise shown.

Illinois Department of Transportation

PASSED January 1, 2009
ENGINEER OF POLICY AND PROCEDURES

APPROVED January 1, 2009
ENGINEER OF DESIGN AND ENVIRONMENT

ISSUED 1-1-97

DATE	REVISIONS
1-1-09	Switched units to English (metric).
4-1-06	Added concrete fill in bottom of inlet.

INLET - TYPE A

STANDARD 602301-02

* For precast reinforced concrete sections, this dimension may vary from the dimension given to plus 6 (150).

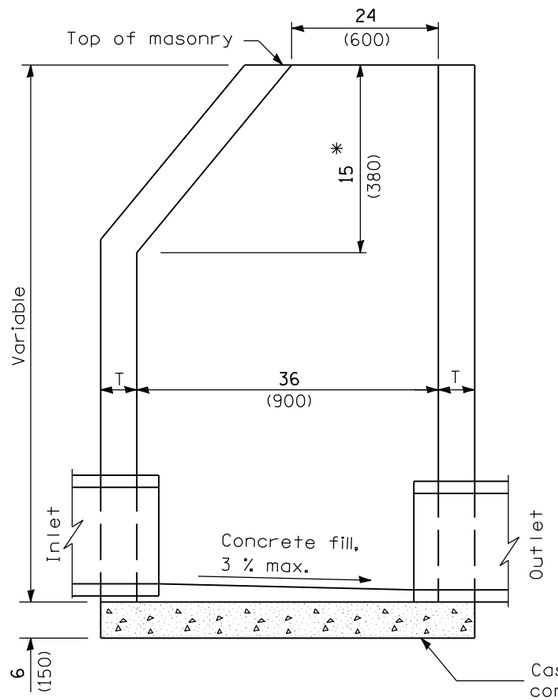

ELEVATION - ECCENTRIC

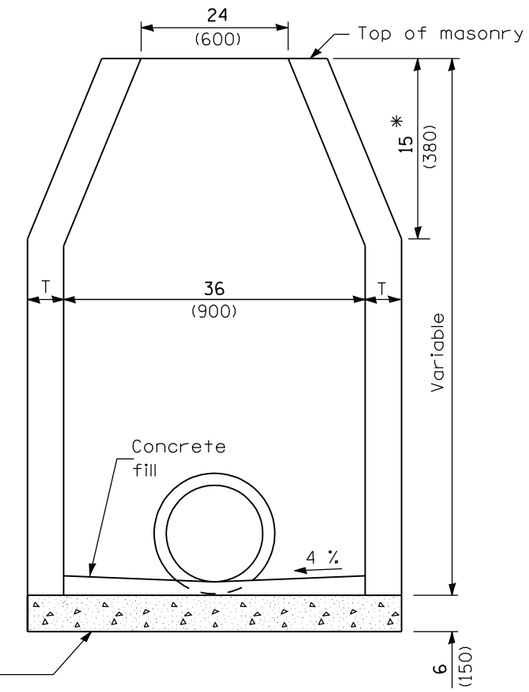

ELEVATION - CONCENTRIC

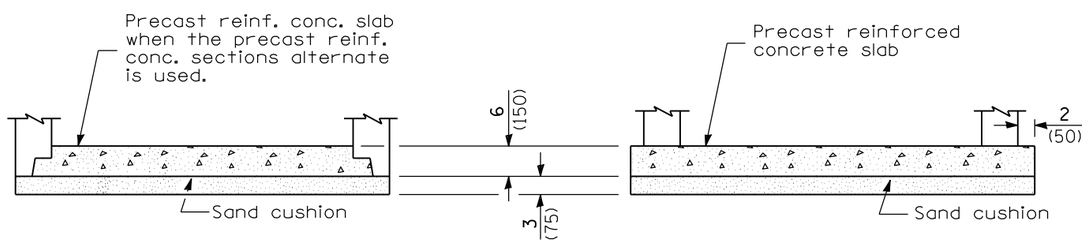

ALTERNATE BOTTOM SLAB

ALTERNATE MATERIALS FOR WALLS	T (min.)
Concrete Masonry Unit	5 (125)
Brick Masonry	8 (200)
Precast Reinforced Concrete Section	3 (75)
Cast-in-Place Concrete	6 (150)

GENERAL NOTES

See Standard 602601 for optional Precast Reinforced Concrete Flat Slab Top.

All dimensions are in inches (millimeters) unless otherwise shown.

Illinois Department of Transportation

PASSED January 1, 2009
ENGINEER OF POLICY AND PROCEDURES
APPROVED January 1, 2009
ENGINEER OF DESIGN AND ENVIRONMENT

ISSUED 1-1-97

DATE	REVISIONS
1-1-09	Switched units to English (metric).
4-1-06	Revised detail for concrete fill in elevation views.

INLET - TYPE B

STANDARD 602306–02

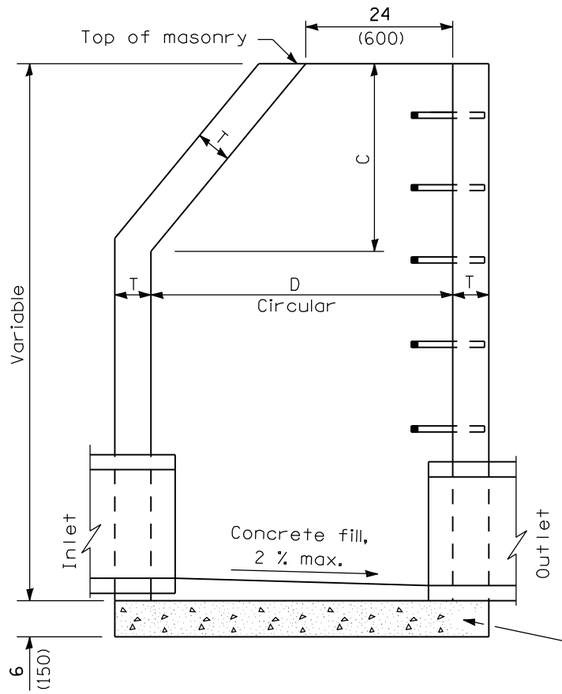

ELEVATION - ECCENTRIC

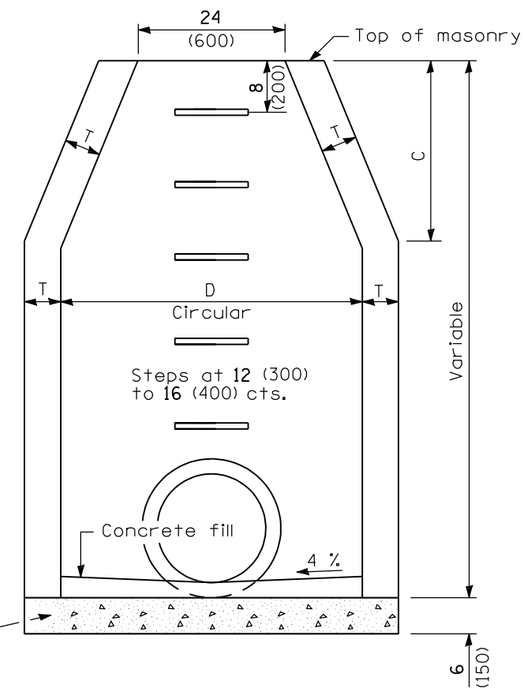

ELEVATION - CONCENTRIC

ALTERNATE MATERIALS FOR WALLS	D	C *	T (min.)
Concrete Masonry Unit	4'-0" (1.2 m) 5'-0" (1.5 m)	30 (750) 3'-9" (1.15 m)	5 (125) 5 (125)
Brick Masonry	4'-0" (1.2 m) 5'-0" (1.5 m)	30 (750) 3'-9" (1.15 m)	8 (200) 8 (200)
Precast Reinforced Concrete Section	4'-0" (1.2 m) 5'-0" (1.5 m)	30 (750) 3'-9" (1.15 m)	4 (100) 5 (125)
Cast-in-place Concrete	4'-0" (1.2 m) 5'-0" (1.5 m)	30 (750) 3'-9" (1.15 m)	6 (150) 6 (150)

* For precast reinforced concrete sections, dimension "C" may vary from the dimension given to plus 6 (150).

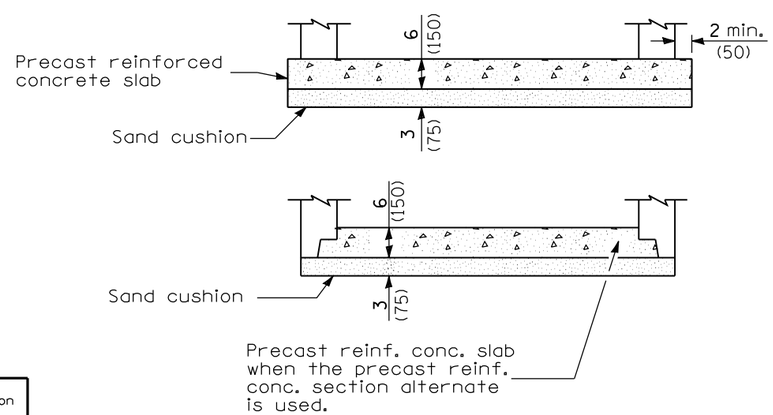

ALTERNATE BOTTOM SLAB

GENERAL NOTES

See Standard 602701 for details of steps.

See Standard 602601 for optional Precast Reinforced Concrete Flat Slab Top.

All dimensions are in inches (millimeters) unless otherwise shown.

Illinois Department of Transportation

PASSED January 1, 2009
ENGINEER OF POLICY AND PROCEDURES
APPROVED January 1, 2009
ENGINEER OF DESIGN AND ENVIRONMENT

ISSUED 1-1-97

DATE	REVISIONS
1-1-09	Switched units to
	English (metric).
4-1-06	Revised detail for
	concrete fill in
	elevation vews.

MANHOLE TYPE A

STANDARD 602401-02

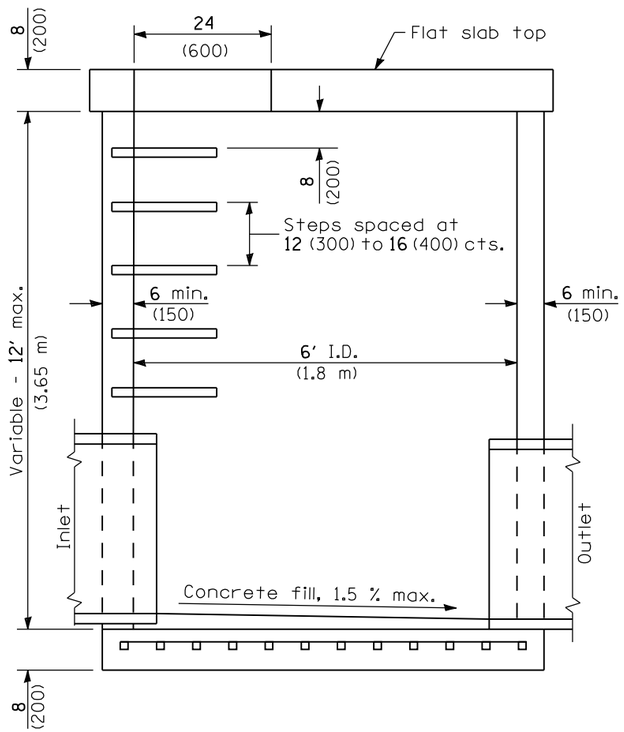

ELEVATION

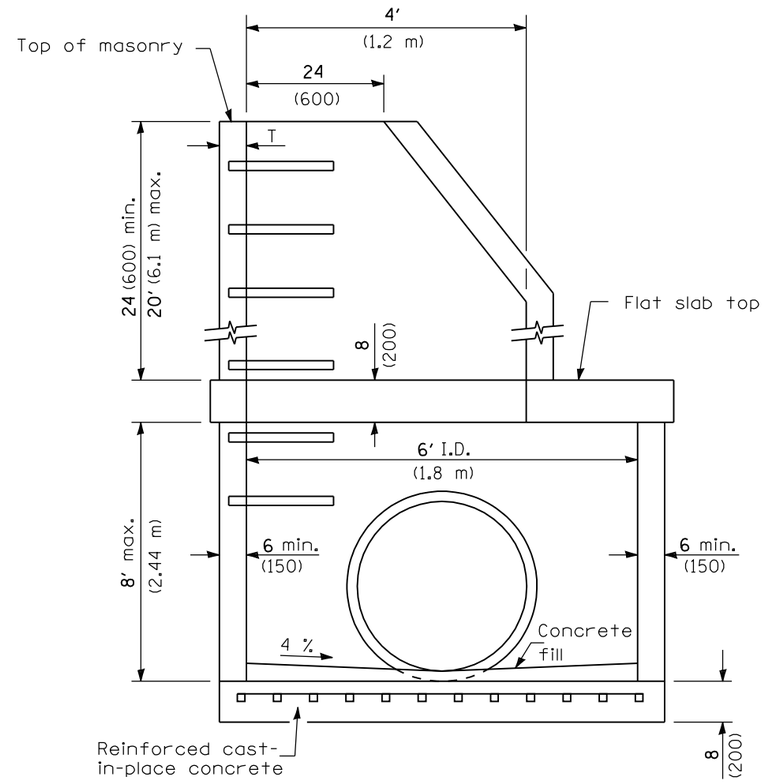

ELEVATION

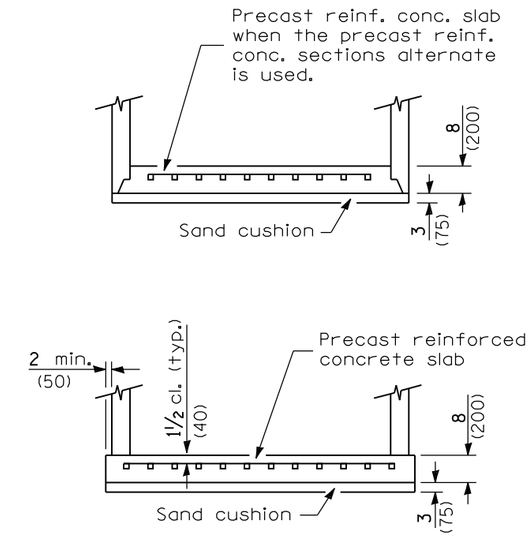

ALTERNATE BOTTOM SLABS

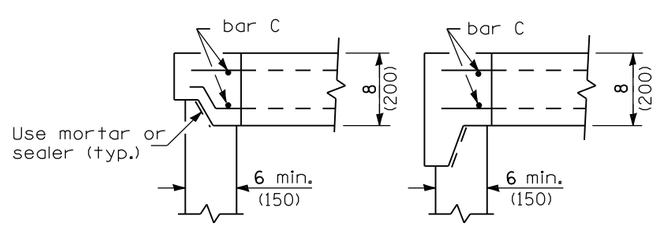

ALTERNATE JOINT CONFIGURATIONS

ALTERNATE MATERIALS FOR WALLS	T (min)
Concrete Masonry Units	5 (125)
Precast Reinforced Concrete Sections	4 (100)
Cast-in-Place Concrete	6 (150)

GENERAL NOTES

Joint configuration and dimensions of flat slab top shall match and fit the riser joint detail.

Lifting devices shall be approved by the Engineer.

Bottom slabs shall be reinforced with a minimum of 0.46 sq. in./ft. (975 mm^2/m) in both directions.

See Standard 602701 for details of manhole steps.

All dimensions are in inches (millimeters) unless otherwise shown.

Illinois Department of Transportation

PASSED January 1, 2009
ENGINEER OF POLICY AND PROCEDURES

APPROVED January 1, 2009
ENGINEER OF DESIGN AND ENVIRONMENT

ISSUED 1-1-97

DATE	REVISIONS
1-1-09	Switched units to English (metric).
4-1-06	Revised detail for concrete fill in elevation views.

MANHOLE TYPE A 6' (1.8 m) DIAMETER

(Sheet 1 of 2)

STANDARD 602406–03

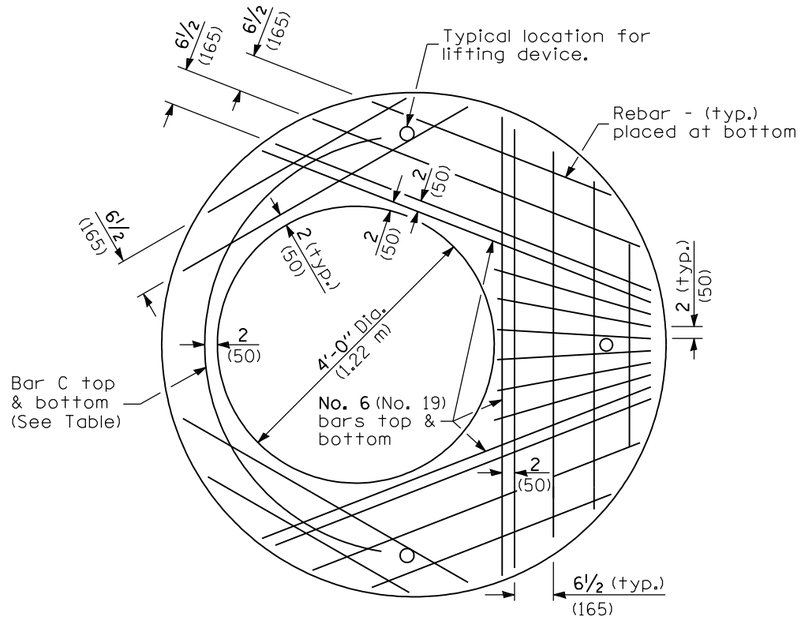

PLAN

Showing Rebar Reinforcement

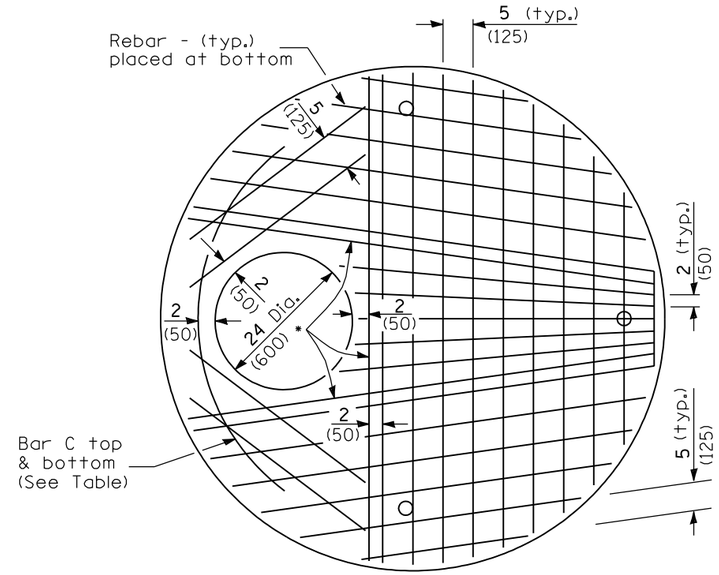

* No. 6 (No. 19) bars top & bottom

Diameter of opening	Thickness	Reinforcement "As" WWF Each direction	Bar Size	No. 4 (No. 13) Bar C	
				Length	Radius
24 (600)	8 (200)	1.06 sq. in./ft. (2244 sq. mm/m)	No. 6 (No. 19)	6'-0" (1.83 m)	38 (965)
4'-0" (1.2 m)	8 (200)	0.82 sq. in./ft/ (1736 sq. mm/m)	No. 6 (No. 19)	9'-0" (2.74 m)	38 (965)

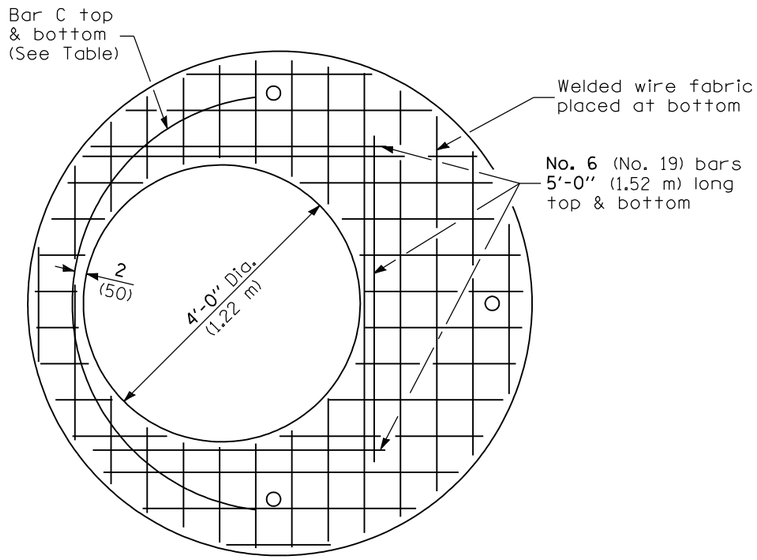

PLAN

Showing Welded Wire Fabric Reinforcement

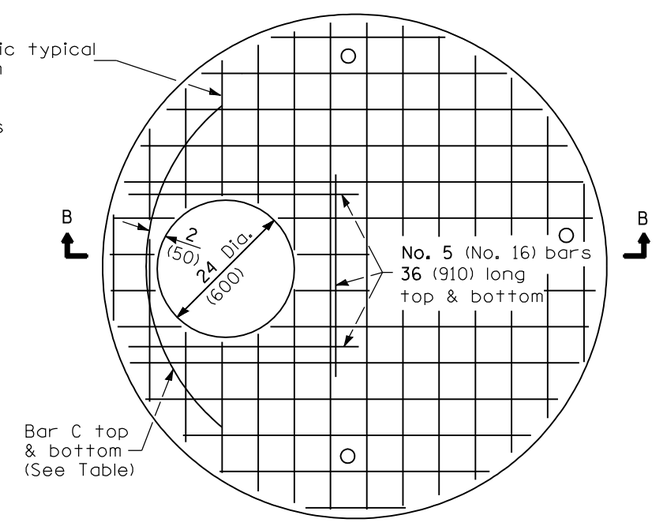

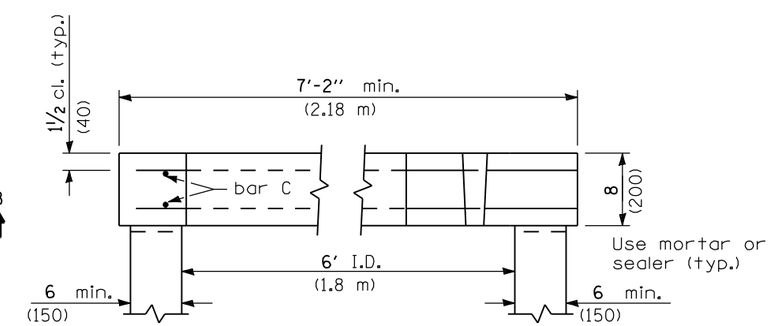

SECTION B-B

Illinois Department of Transportation

PASSED January 1, 2009

ENGINEER OF POLICY AND PROCEDURES

APPROVED January 1, 2009

ENGINEER OF DESIGN AND ENVIRONMENT

ISSUED 1-1-97

MANHOLE TYPE A 6' (1.8 m) DIAMETER

(Sheet 2 of 2)

STANDARD 602406–03

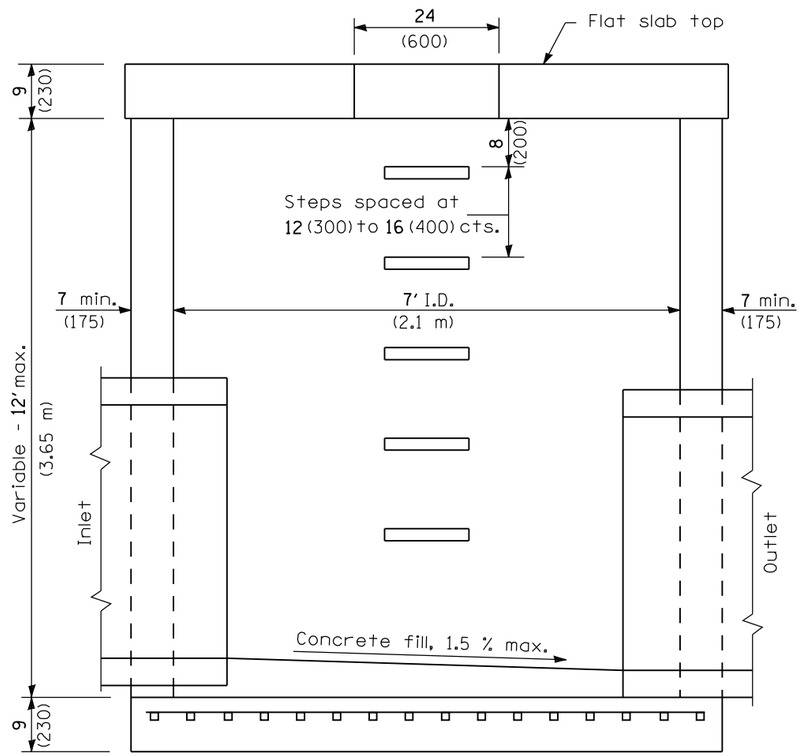

ELEVATION

(With Flat Slab Top Only)

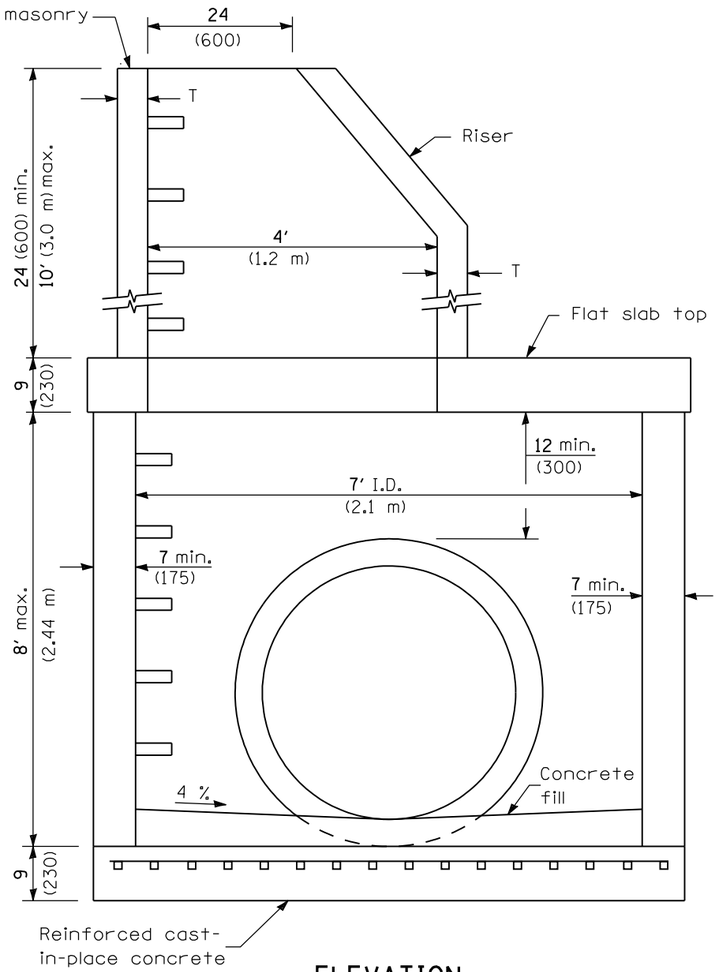

ELEVATION

(With Flat Slab Top and Riser)

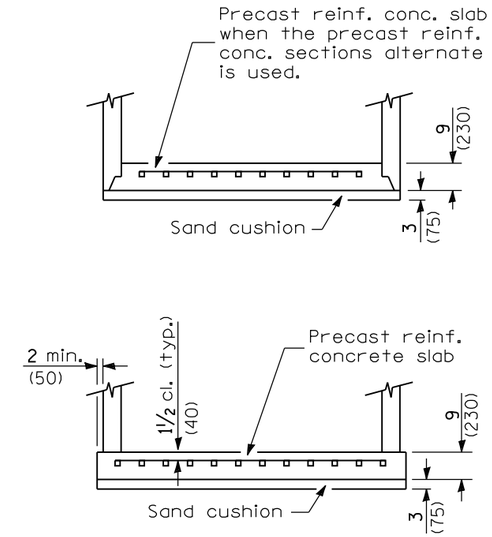

ALTERNATE BOTTOM SLABS

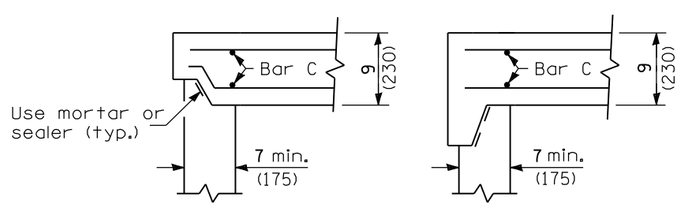

ALTERNATE JOINT CONFIGURATIONS

ALTERNATE MATERIALS FOR RISER WALLS	T (min)
Concrete Masonry Units	5 (125)
Precast Reinforced Concrete Sections	4 (100)
Cast-in-Place Concrete	6 (150)

GENERAL NOTES

Joint configuration and dimensions of flat slab top shall match and fit the riser joint detail.

Lifting devices shall be approved by the Engineer.

Bottom slabs shall be reinforced with a minimum of 0.60 sq. in./ft. (1270 sq. mm/m) in both directions.

See Standard 602701 for details of manhole steps.

All dimensions are in inches (millimeters) unless otherwise shown.

Illinois Department of Transportation

PASSED January 1, 2009
ENGINEER OF POLICY AND PROCEDURES

APPROVED January 1, 2009
ENGINEER OF DESIGN AND ENVIRONMENT

ISSUED 4-1-06

DATE	REVISIONS
1-1-09	Switched units to
	English (metric).
4-1-06	New standard.

MANHOLE TYPE A
7' (2.1 m) DIAMETER

(Sheet 1 of 2)

STANDARD 602411-01

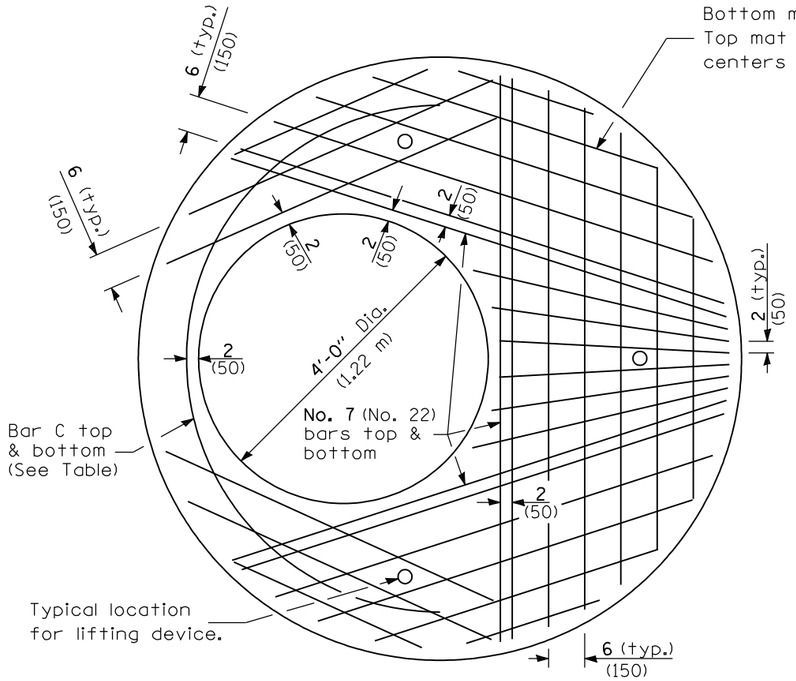

PLAN

Showing Rebar Reinforcement

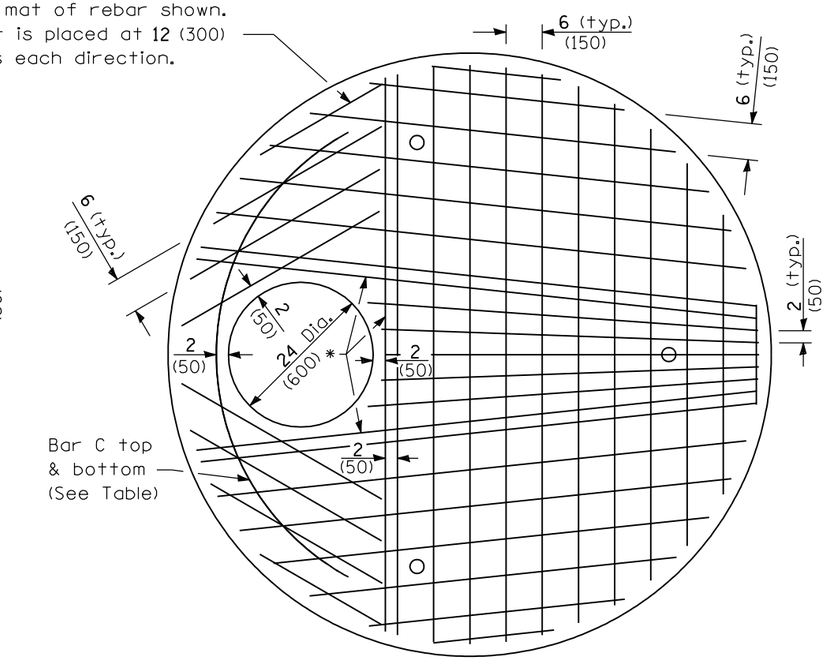

* No. 8 (No. 25) bars top & bottom

Diameter of opening	Reinforcement Bar Size	Reinforcement "As" WWF each direction	No. 4 (No. 13) Bar C	
			Length	Radius
24 (600)	Bottom mat No. 8 (No. 25)	Bottom mat *** 1.57 sq. in./ft. (3325 sq. mm/m)	7'-6" (2.30 m)	3'-6" (1.067 m)
	Top mat No. 4 (No. 13)	Top mat *** 0.20 sq. in./ft. (425 sq. mm/m)		
4'-0" (1.2 m)	Bottom mat No. 7 (No. 22)	Bottom mat *** 1.20 sq. in./ft. (2540 sq. mm/m)	11'-0" (3.35 m)	3'-6" (1.067 m)
	Top mat No. 4 (No. 13)	Top mat *** 0.20 sq. in./ft. (425 sq. mm/m)		

*** A maximum of two layers of welded wire fabric may be used to satisfy the required "As" for each mat.

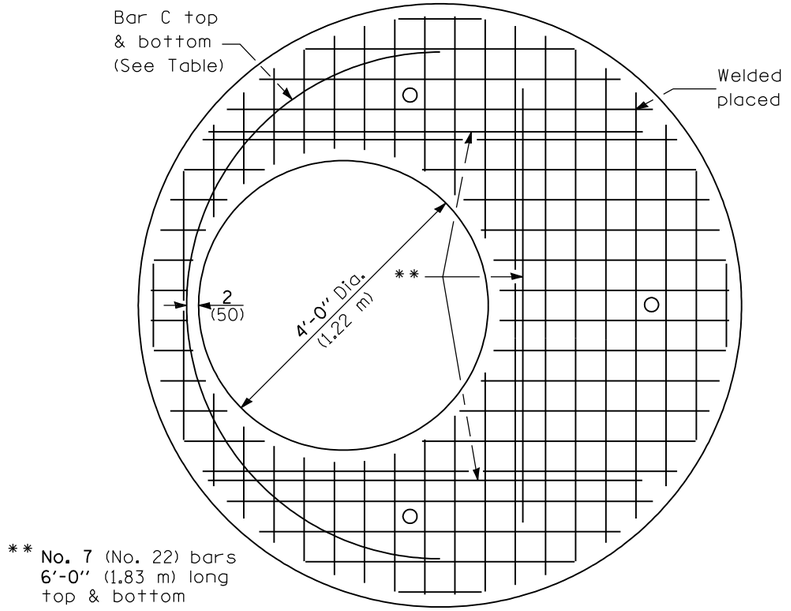

** No. 7 (No. 22) bars 6'-0" (1.83 m) long top & bottom

PLAN

Showing Welded Wire Fabric Reinforcement

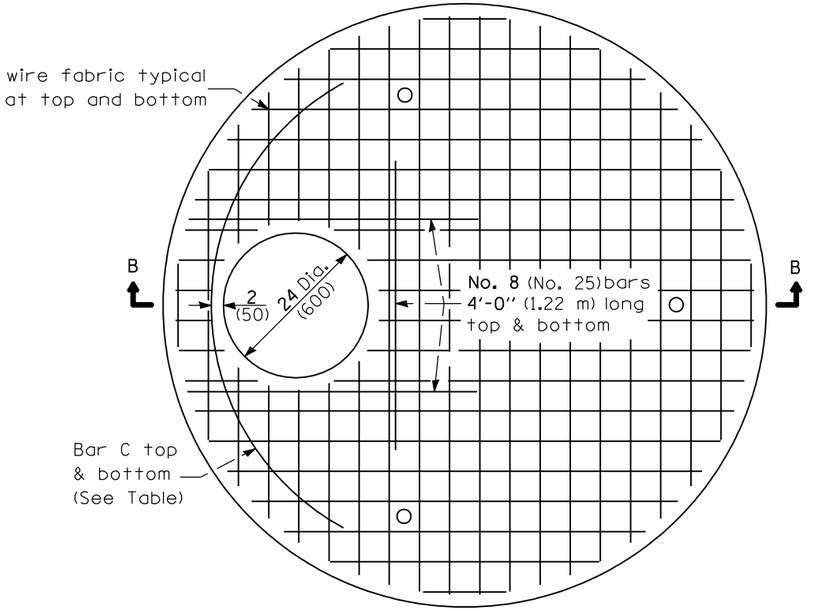

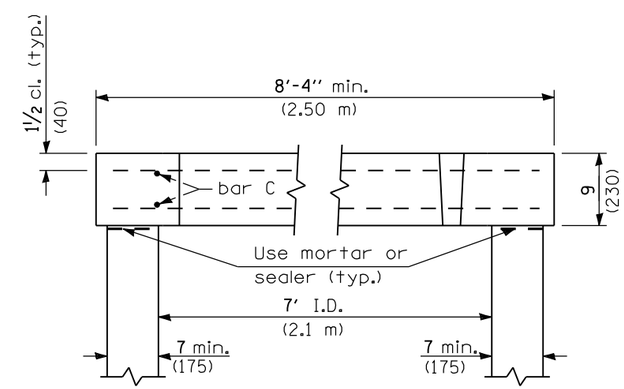

SECTION B-B

(Typical of each top)

Illinois Department of Transportation

PASSED January 1, 2009

ENGINEER OF POLICY AND PROCEDURES

APPROVED January 1, 2009

ENGINEER OF DESIGN AND ENVIRONMENT

ISSUED 4-1-96

MANHOLE TYPE A 7' (2.1 m) DIAMETER

(Sheet 2 of 2)

STANDARD 602411-01

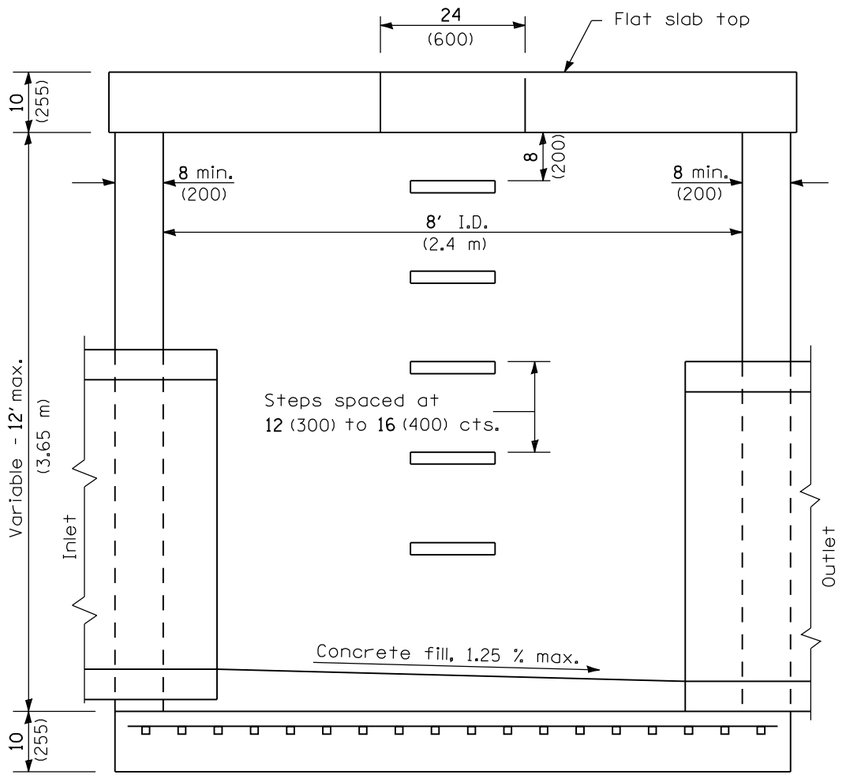

ELEVATION

(With Flat Slab Top Only)

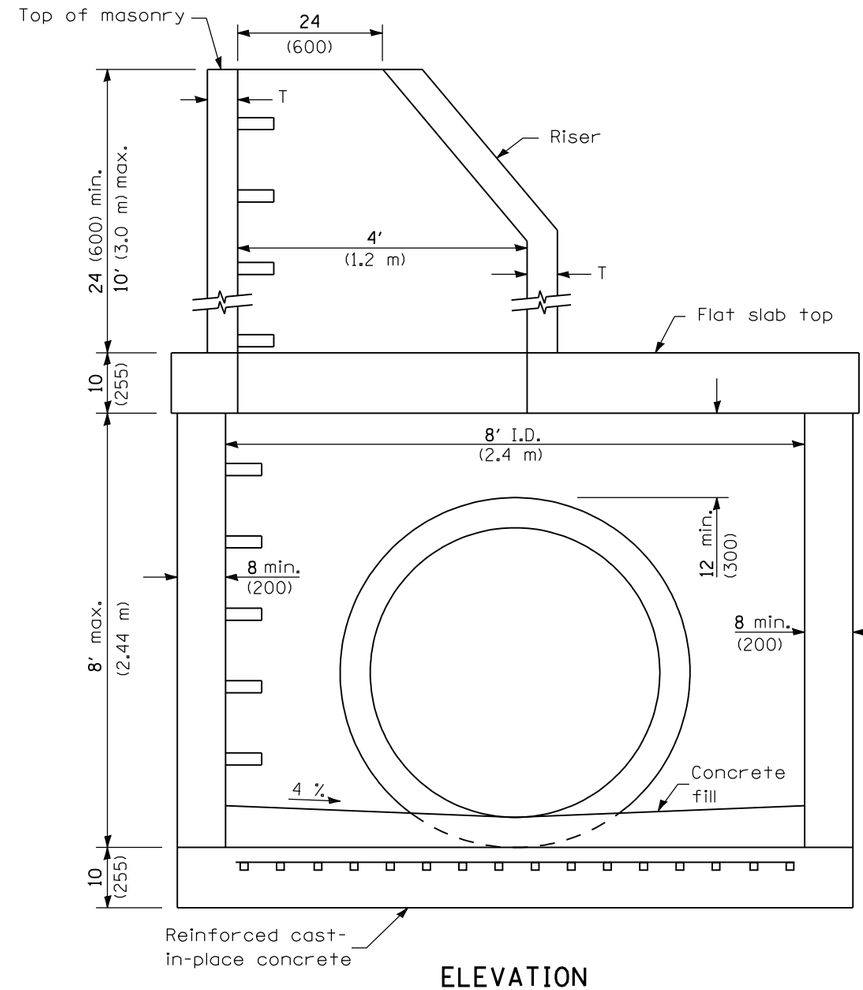

ELEVATION

(With Flat Slab Top and Riser)

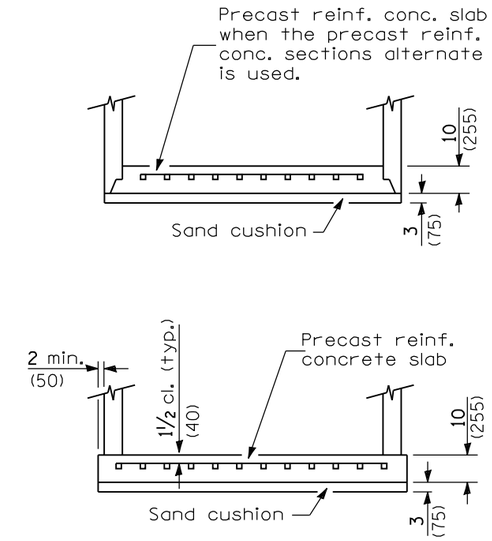

ALTERNATE BOTTOM SLABS

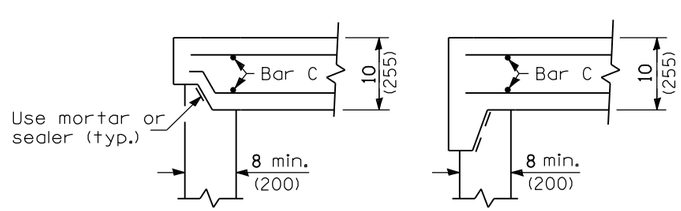

ALTERNATE JOINT CONFIGURATIONS

ALTERNATE MATERIALS FOR RISER WALLS	T (min)
Concrete Masonry Units	5 (125)
Precast Reinforced Concrete Sections	4 (100)
Cast-in-Place Concrete	6 (150)

GENERAL NOTES

Joint configuration and dimensions of flat slab top shall match and fit the riser joint detail.

Lifting devices shall be approved by the Engineer.

Bottom slabs shall be reinforced with a minimum of 0.655 sq. in./ft. (1390 sq. mm/m) in both directions.

See Standard 602701 for details of manhole steps.

All dimensions are in inches (millimeters) unless otherwise shown.

Illinois Department of Transportation

PASSED January 1, 2009
ENGINEER OF POLICY AND PROCEDURES

APPROVED January 1, 2009
ENGINEER OF DESIGN AND ENVIRONMENT

ISSUED 4-1-06

DATE	REVISIONS
1-1-09	Switched units to English (metric).
4-1-06	New standard.

MANHOLE TYPE A 8' (2.4 m) DIAMETER

(Sheet 1 of 2)

STANDARD 602416-01

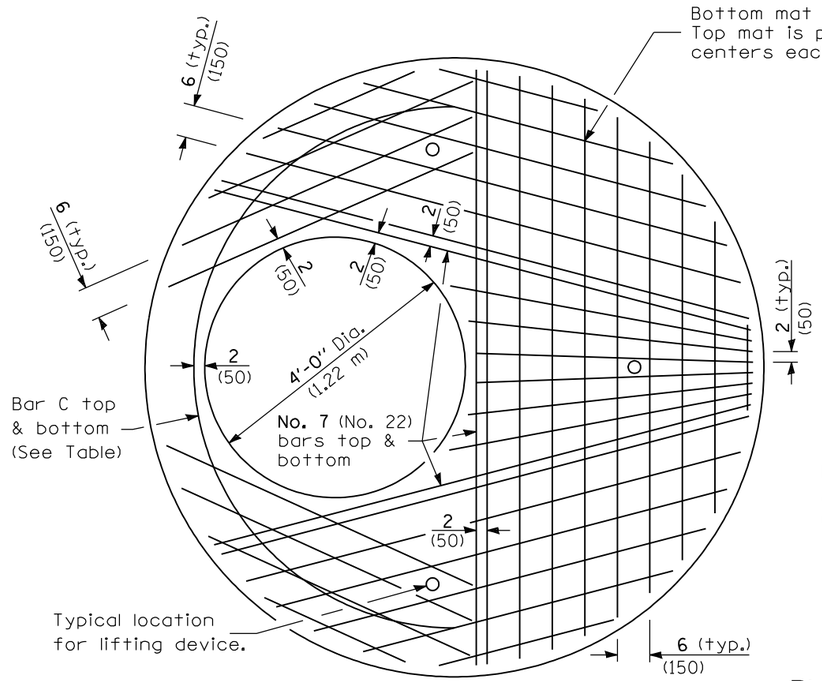

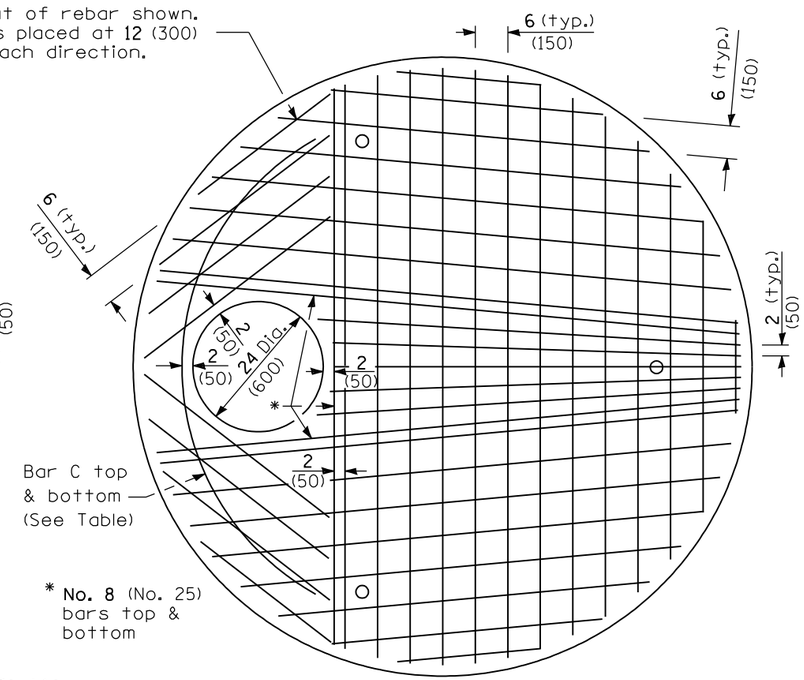

PLAN

Showing Rebar Reinforcement

Diameter of opening	Reinforcement Bar Size	Reinforcement "As" WWF each direction	No. 4 (No. 13) Bar C	
			Length	Radius
24 (600)	Bottom mat No. 8 (No. 25)	Bottom mat *** 1.57 sq. in./ft. (3325 sq. mm/m)	8'-6" (2.60 m)	4'-0" (1.219 m)
	Top mat No. 4 (No. 13)	Top mat *** 0.22 sq. in./ft. (470 sq. mm/m)		
4'-0" (1.2 m)	Bottom mat No. 7 (No. 22)	Bottom mat *** 1.20 sq. in./ft. (2540 sq. mm/m)	12'-6" (3.80 m)	4'-0" (1.219 m)
	Top mat No. 4 (No. 13)	Top mat *** 0.22 sq. in./ft. (470 sq. mm/m)		

*** A maximum of two layers of welded wire fabric may be used to satisfy the required "As" for each mat.

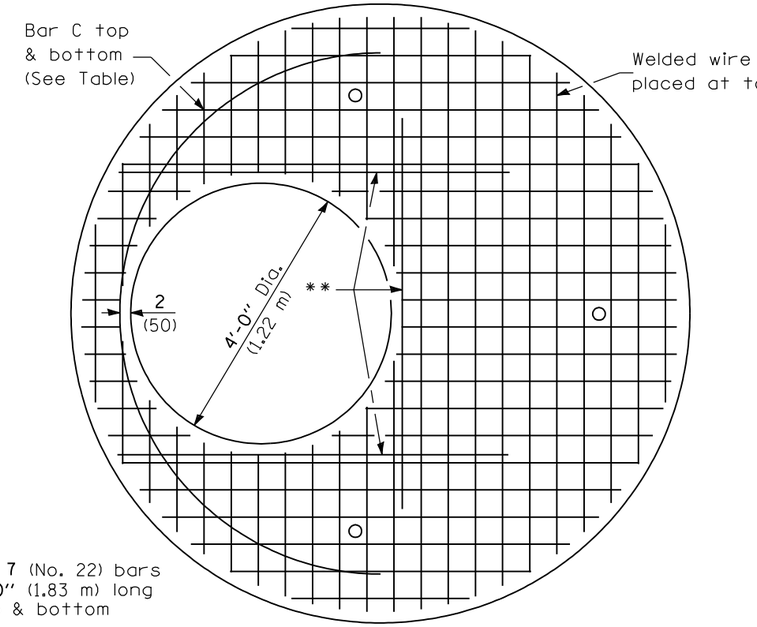

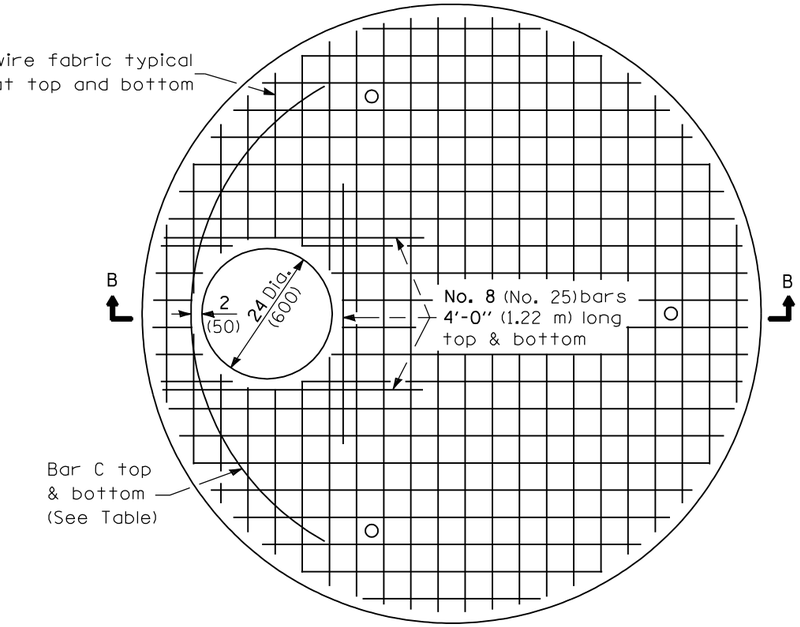

PLAN

Showing Welded Wire Fabric Reinforcement

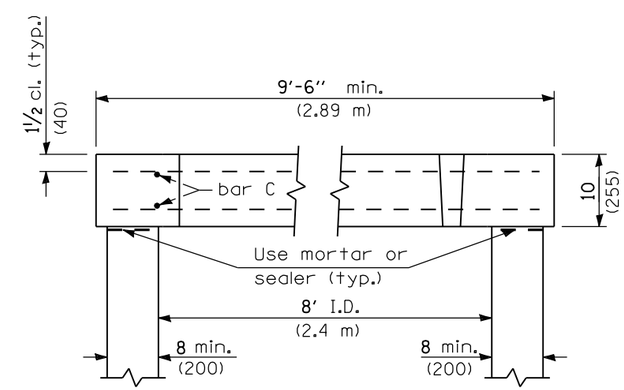

SECTION B-B

Illinois Department of Transportation

PASSED January 1, 2009

ENGINEER OF POLICY AND PROCEDURES

APPROVED January 1, 2009

ENGINEER OF DESIGN AND ENVIRONMENT

ISSUED 4-1-06

MANHOLE TYPE A 8' (2.4 m) DIAMETER

(Sheet 2 of 2)

STANDARD 602416-01

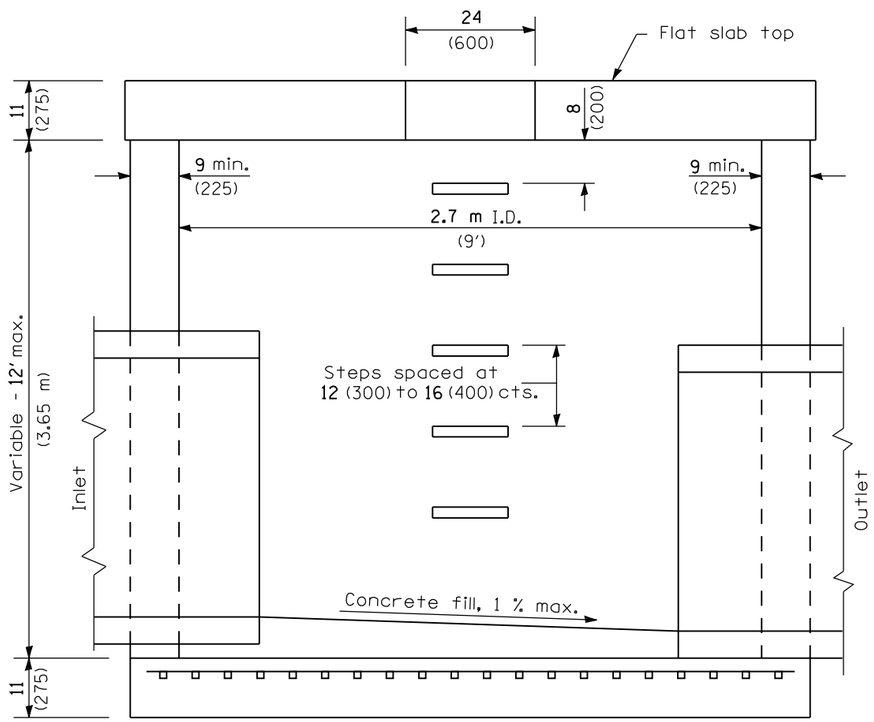

ELEVATION

(With Flat Slab Top Only)

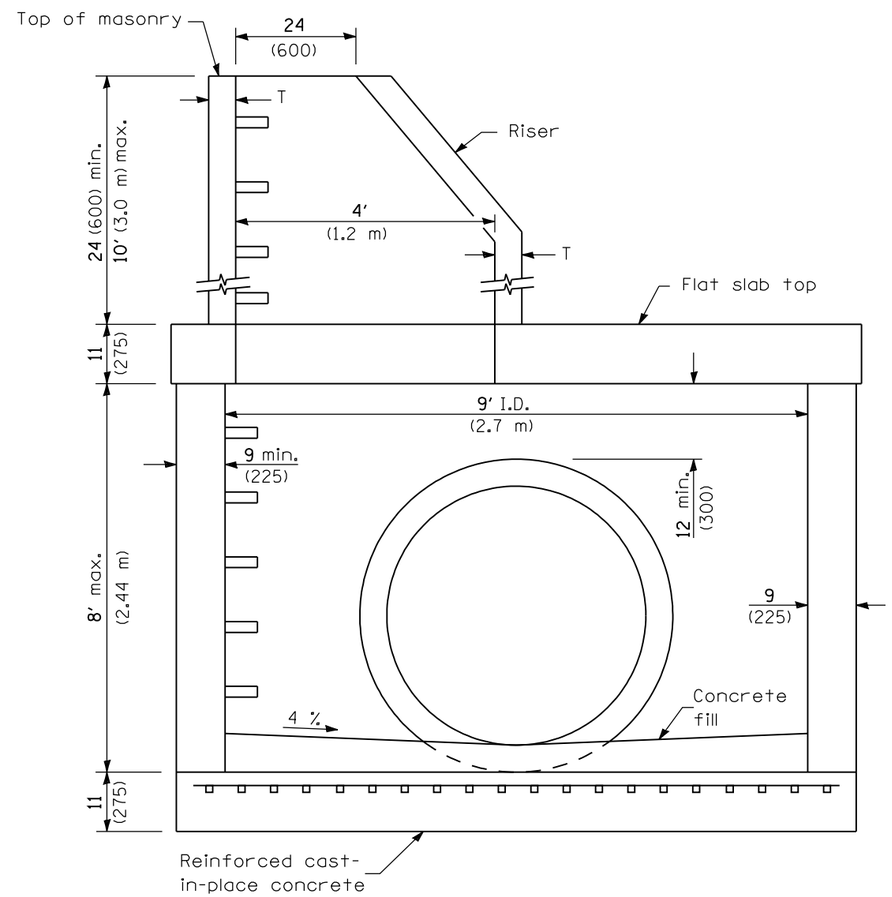

ELEVATION

(With Flat Slab Top and Riser)

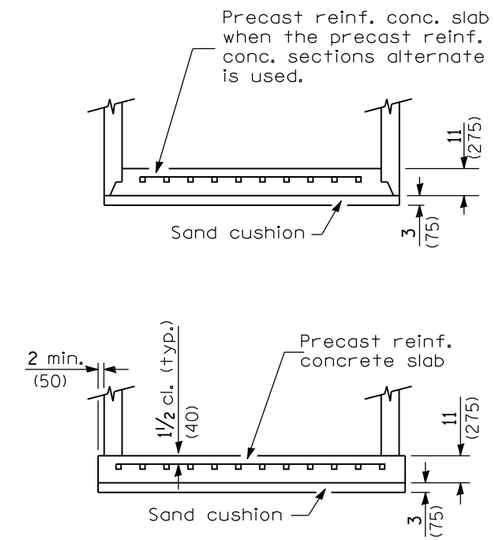

ALTERNATE BOTTOM SLABS

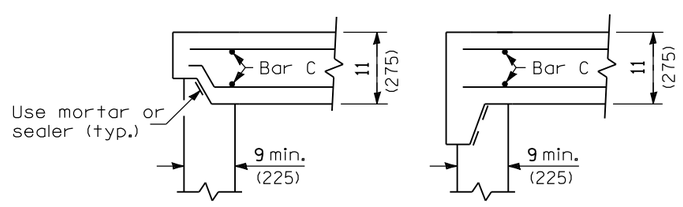

ALTERNATE JOINT CONFIGURATIONS

ALTERNATE MATERIALS FOR RISER WALLS	T (min)
Concrete Masonry Units	5 (125)
Precast Reinforced Concrete Sections	4 (100)
Cast-in-Place Concrete	6 (150)

GENERAL NOTES

Joint configuration and dimensions of flat slab top shall match and fit the riser joint detail.

Lifting devices shall be approved by the Engineer.

Bottom slabs shall be reinforced with a minimum of 0.67 sq. in./ft. (1420 sq. mm/m) in both directions.

See Standard 602701 for details of manhole steps.

All dimensions are in inches (millimeters) unless otherwise shown.

Illinois Department of Transportation

PASSED January 1, 2009
ENGINEER OF POLICY AND PROCEDURES
APPROVED January 1, 2009
ENGINEER OF DESIGN AND ENVIRONMENT

ISSUED 4-1-06

DATE	REVISIONS
1-1-09	Switched units to English (metric).
4-1-06	New standard.

MANHOLE TYPE A 9' (2.7 m) DIAMETER

(Sheet 1 of 2)

STANDARD 602421-01

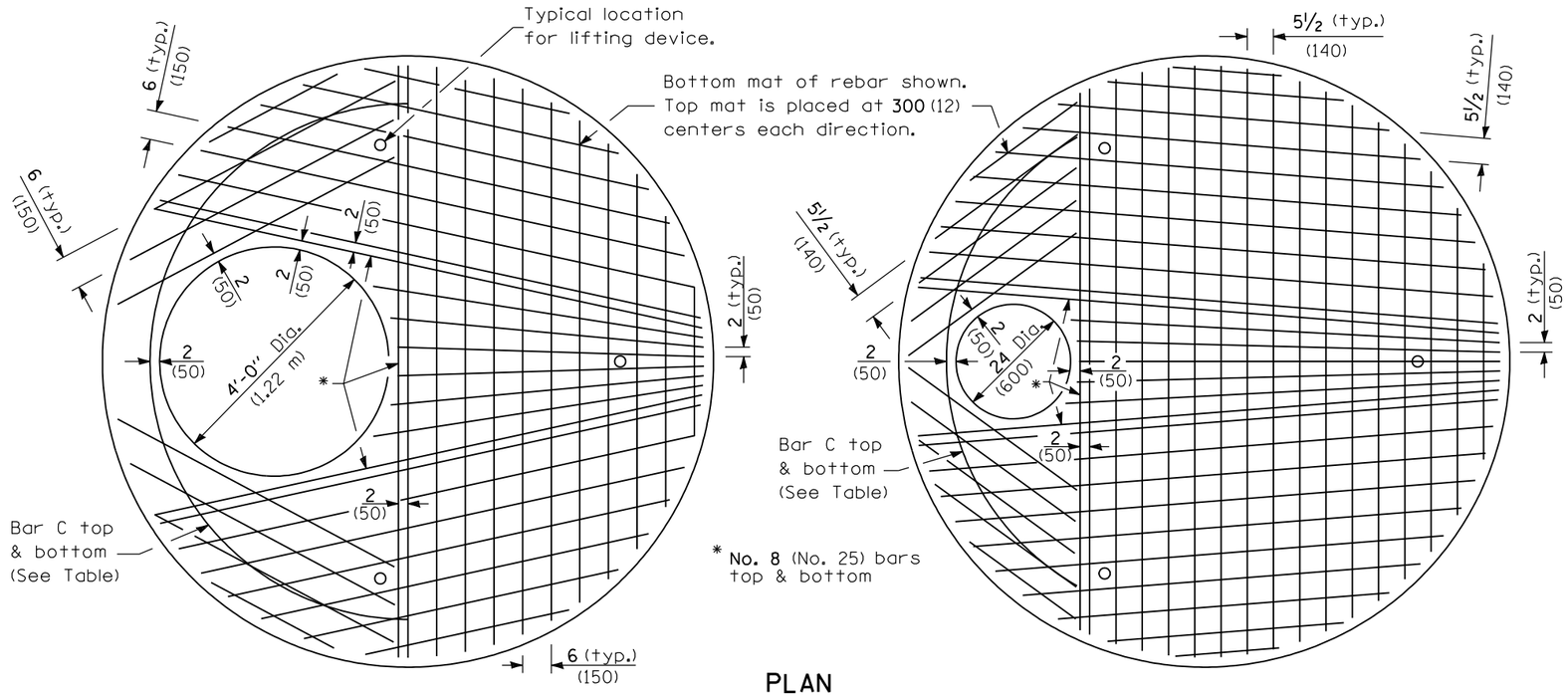

PLAN

Showing Rebar Reinforcement

Diameter of opening	Reinforcement Bar Size	Reinforcement "As" WWF each direction	No. 4 (No. 13) Bar C	
			Length	Radius
24 (600)	Bottom mat No. 8 (No. 25)	Bottom mat ••• 1.71 sq. in./ft. (3620 sq. mm/m)	9'-6" (2.90 m)	4'-6" (1.372 m)
	Top mat No. 4 (No. 13)	Top mat ••• 0.24 sq. in./ft. (510 sq. m/mm)		
4'-0" (1.2 m)	Bottom mat No. 8 (No. 25)	Bottom mat ••• 1.57 sq. in./ft. (3325 sq. m/mm)	14'-2" (4.30 m)	4'-6" (1.372 m)
	Top mat No. 4 (No. 13)	Top mat ••• 0.24 sq. in./ft. (510 sq. m/mm)		

••• A maximum of two layers of welded wire fabric may be used to satisfy the required "As" for each mat.

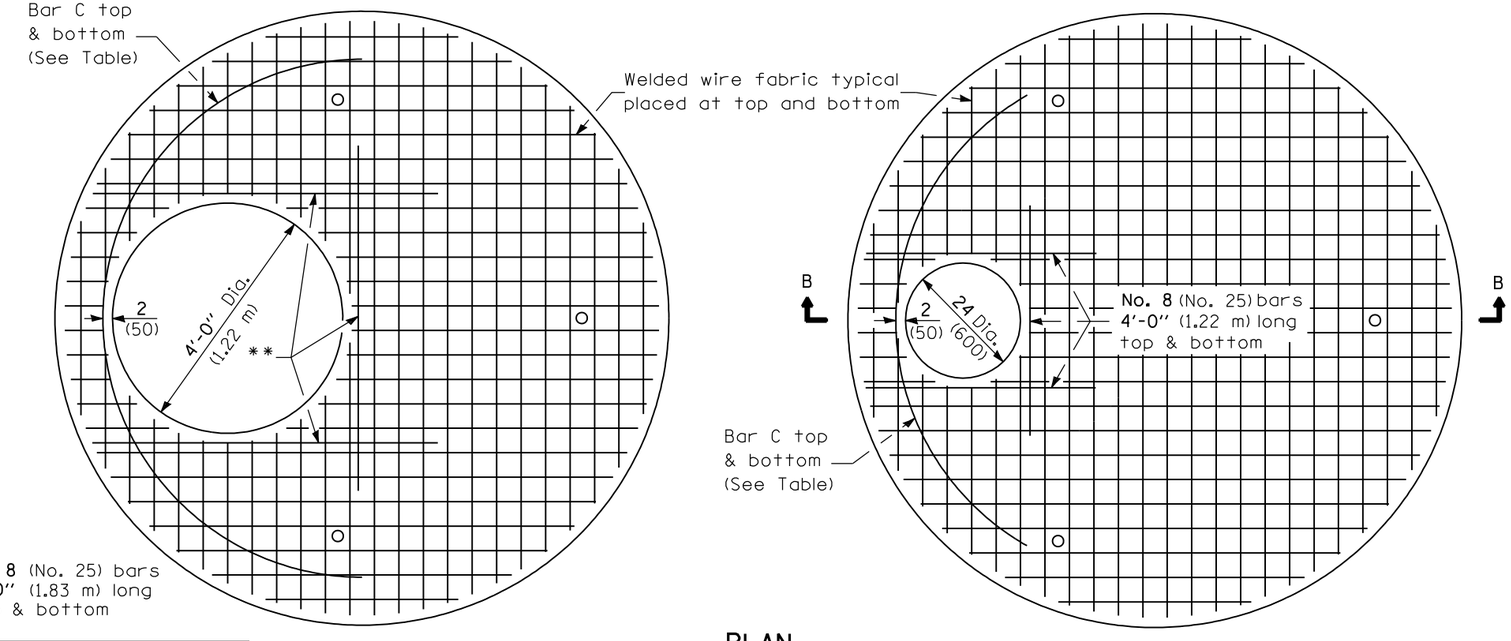

PLAN

Showing Welded Wire Fabric Reinforcement

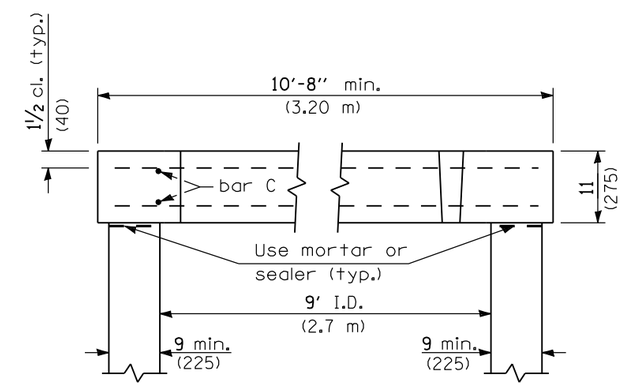

SECTION B-B

Illinois Department of Transportation

PASSED January 1, 2009

ENGINEER OF POLICY AND PROCEDURES

APPROVED January 1, 2009

ENGINEER OF DESIGN AND ENVIRONMENT

ISSUED 4-1-06

MANHOLE TYPE A
9' (2.7 m) DIAMETER

(Sheet 2 of 2)

STANDARD 602421-01

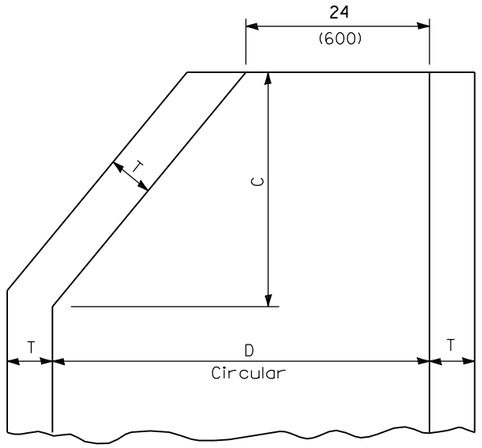

The cone of the valve vault shall be constructed as shown above only when there is interference with underground conditions and those conditions cannot be altered.

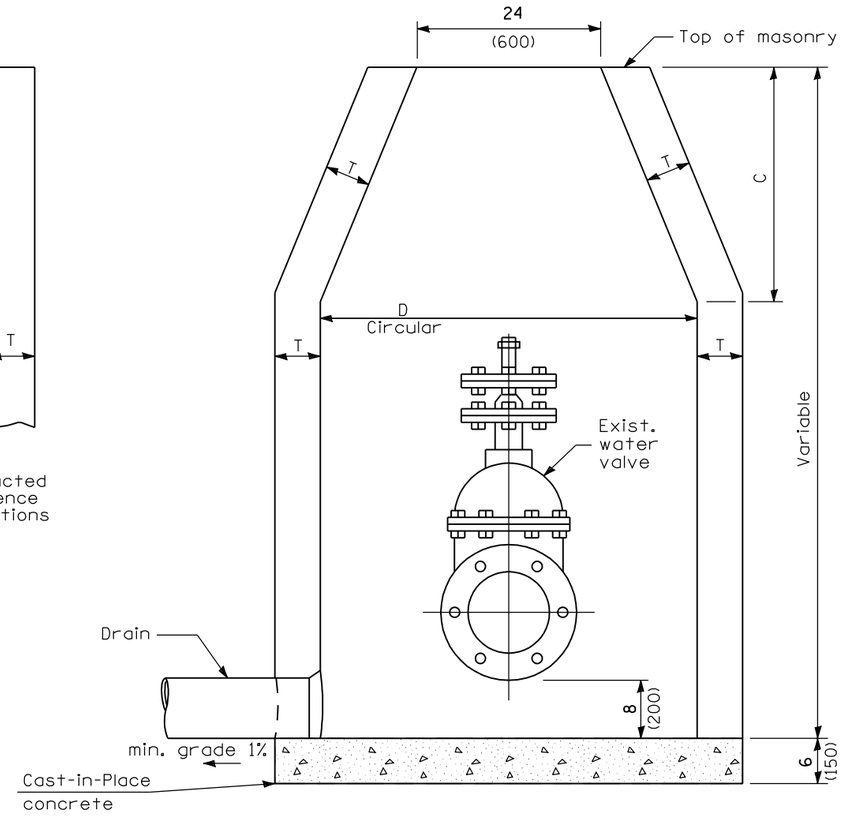

ELEVATION

ALTERNATE MATERIALS FOR WALLS	D	C*	T (min.)
Concrete Masonry Unit	4'-0" (1.2 m) 5'-0" (1.5 m)	30 (750) 3'-9" (1.15 m)	5 (125) 5 (125)
Brick Masonry	4'-0" (1.2 m) 5'-0" (1.5 m)	30 (750) 3'-9" (1.15 m)	8 (200) 8 (200)
Precast Reinforced Concrete Section	4'-0" (1.2 m) 5'-0" (1.5 m)	30 (750) 3'-9" (1.15 m)	4 (100) 5 (125)
Cast-in-Place Concrete	4'-0" (1.2 m) 5'-0" (1.5 m)	30 (750) 3'-9" (1.15 m)	6 (150) 6 (150)

* For precast reinforced concrete sections, dimension "C" may vary from the dimension given to plus 6 (150).

DIAMETER OF WATER MAIN	D
8 (200) and under	4'-0" (1.2 m)
10 (250) and over	5'-0" (1.5 m)

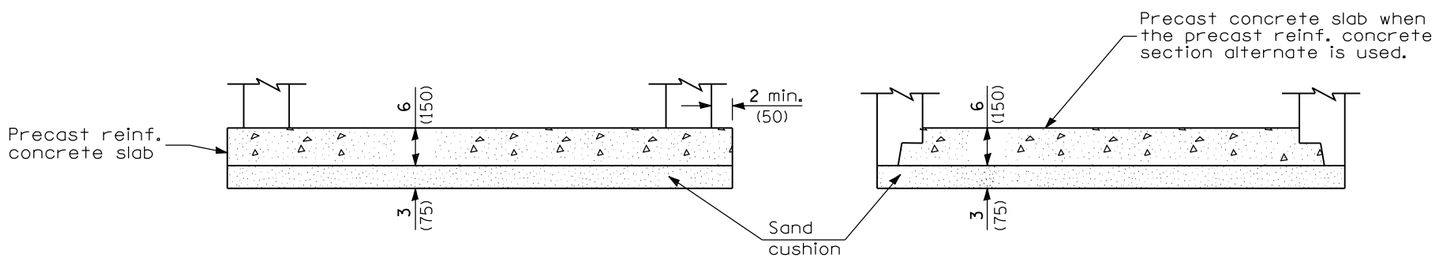

ALTERNATE METHODS

GENERAL NOTES

See Standard 602601 for optional Precast Reinforced Concrete Flat Top Slab.

All dimensions are in inches (millimeters) unless otherwise shown.

Illinois Department of Transportation

PASSED January 1, 2009
ENGINEER OF POLICY AND PROCEDURES

APPROVED January 1, 2009
ENGINEER OF DESIGN AND ENVIRONMENT

ISSUED 1-1-97

DATE	REVISIONS
1-1-09	Switched units to English (metric).
1-1-97	Renum. Standard 1526-8

VALVE VAULT TYPE A

STANDARD 602501-01

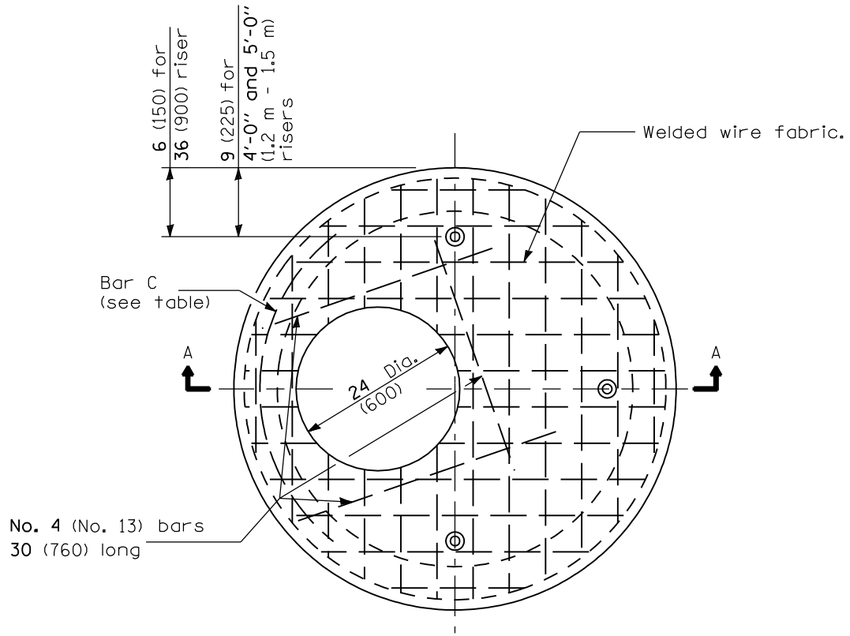

PLAN

(WELDED WIRE FABRIC)

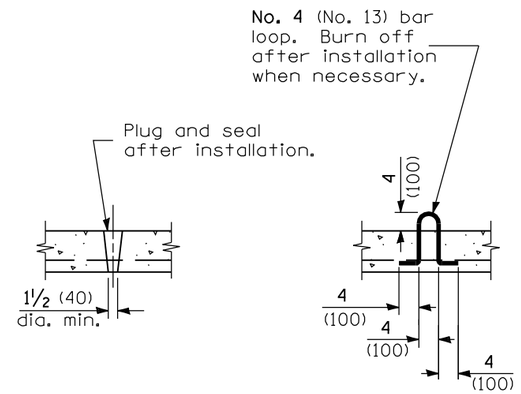

LIFTING HOLE OR LIFTING LOOP

TYPICAL

(3 required per slab)

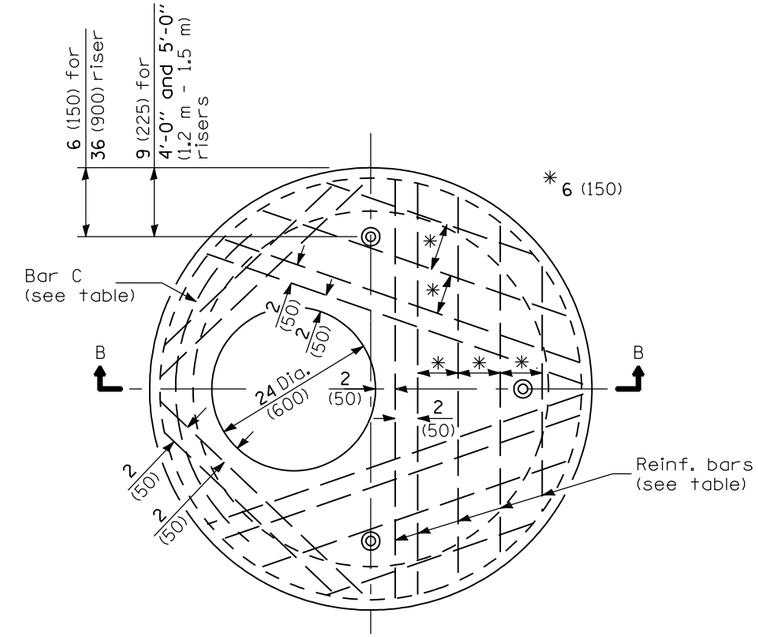

PLAN

(REINFORCEMENT BARS)

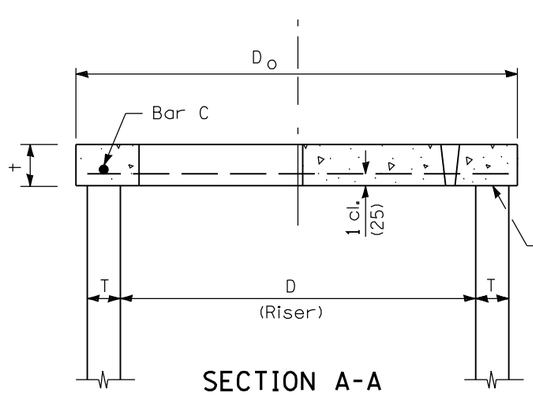

SECTION A-A

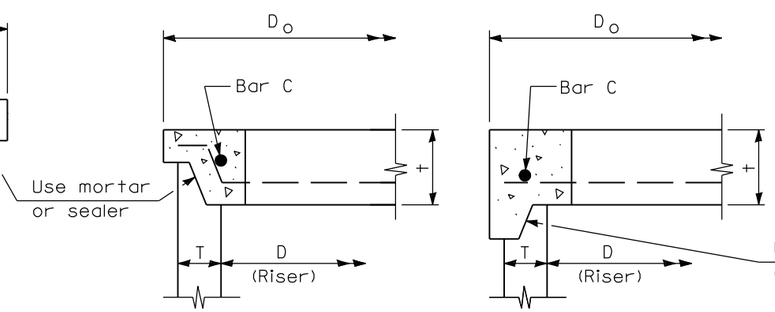

ALTERNATE JOINT CONFIGURATIONS

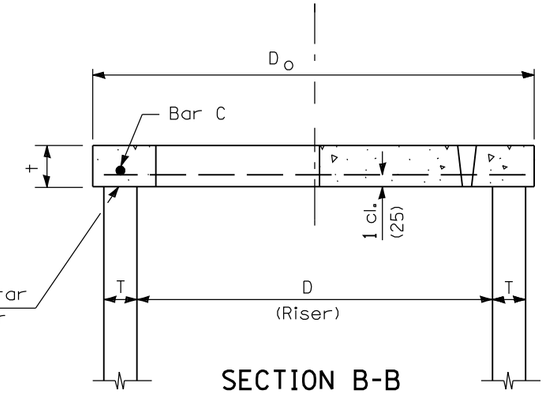

SECTION B-B

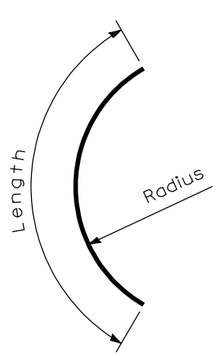

BAR C

TABLE

D	T	D_o (min.)	t	Reinforcement "A_s" W.W.F. each direction	OR Bar size	No. 4 (No. 13) Bar C Length	Radius
36 (900)	See applicable Standards	D + 2T	6 (150)	0.20 sq. in./ft. (425 sq. mm/m)	No. 4 (No. 13)	4'-0" (1.2 m)	19 (480)
4'-0" (1.2 m)			6 (150)	0.35 sq. in./ft. (740 sq. mm/m)	No. 5 (No. 16)	4'-6" (1.35 m)	26 (660)
5'-0" (1.5 m)			8 (200)	0.35 sq. in./ft. (740 sq. mm/m)	No. 5 (No. 16)	5'-0" (1.5 m)	32 (810)

GENERAL NOTES

The flat slab top may be used in lieu of the tapered tops shown on Standards 602001, 602011, 602016, 602306, 602401, or 602501 at the option of the Contractor or when field conditions prohibit the use of tapered tops.

All dimensions are in millimeters (inches) unless otherwise shown.

Illinois Department of Transportation

PASSED January 1, 2009
ENGINEER OF POLICY AND PROCEDURES
APPROVED January 1, 2009
ENGINEER OF DESIGN AND ENVIRONMENT

ISSUED 1-1-97

DATE	REVISIONS
1-1-09	Switched units to English (metric).
1-1-07	Soft converted metric reinforcement bars.

PRECAST REINFORCED CONCRETE FLAT SLAB TOP

STANDARD 602601-02

CAST IRON STEPS

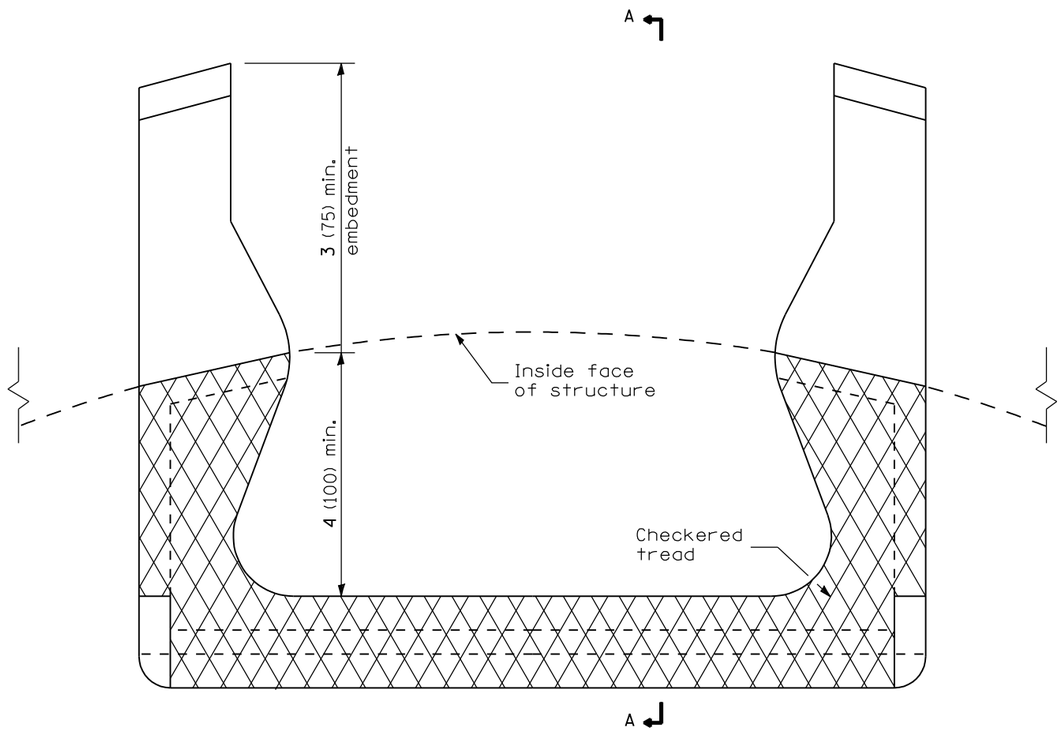

PLAN VIEW

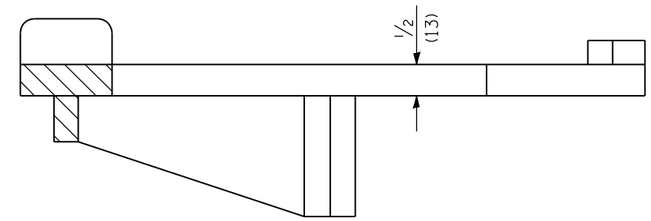

SECTION A-A

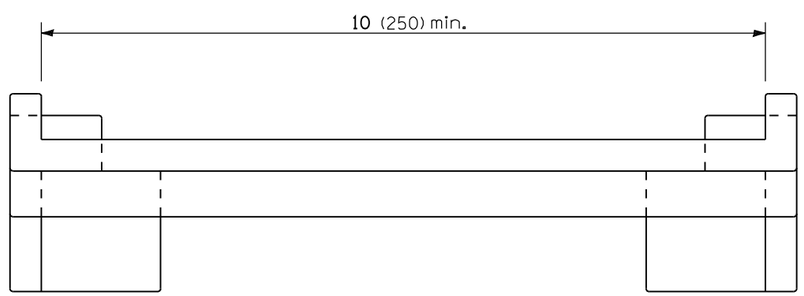

ELEVATION VIEW

All dimensions are in inches (millimeters) unless otherwise shown.

Illinois Department of Transportation

PASSED January 1, 2009
ENGINEER OF POLICY AND PROCEDURES
APPROVED January 1, 2009
ENGINEER OF DESIGN AND ENVIRONMENT

ISSUED 1-1-97

DATE	REVISIONS
1-1-09	Switched units to English (metric).
4-1-06	Revised title, drawings, and added plastic steps on sheet 2.

MANHOLE STEPS

(Sheet 1 of 2)

STANDARD 602701–02

PLASTIC STEPS

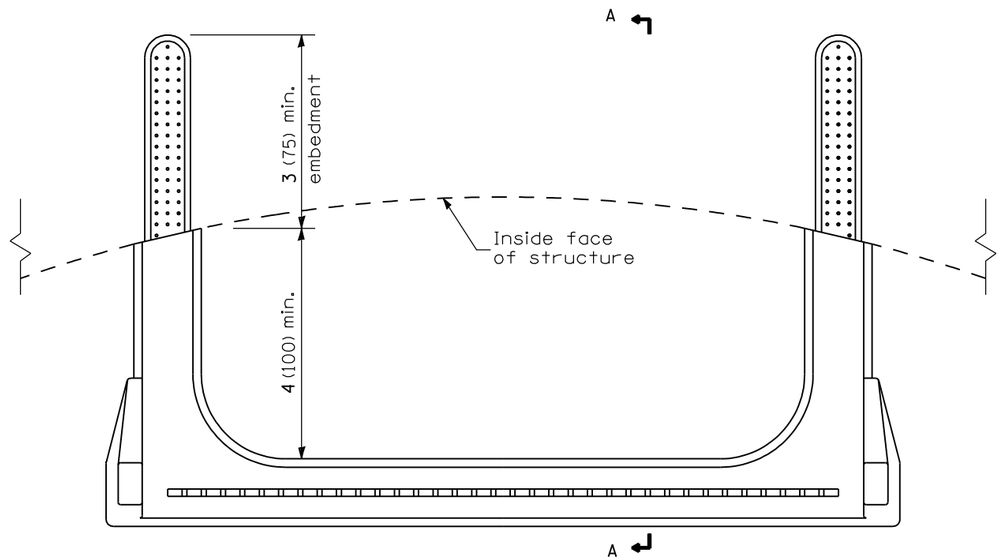

PLAN VIEW

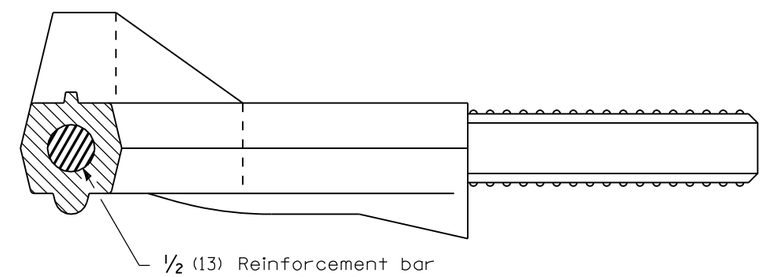

SECTION A-A

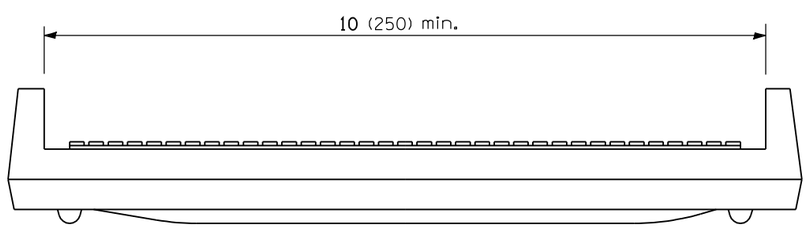

ELEVATION VIEW

Illinois Department of Transportation

PASSED January 1, 2009
ENGINEER OF POLICY AND PROCEDURES

APPROVED January 1, 2009
ENGINEER OF DESIGN AND ENVIRONMENT

ISSUED 1-1-97

MANHOLE STEPS

(Sheet 2 of 2)

STANDARD 602701-02

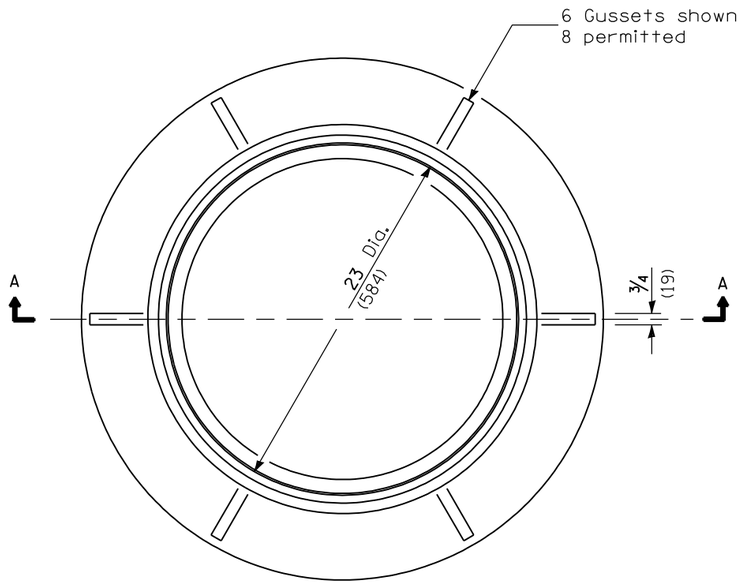

CAST FRAME

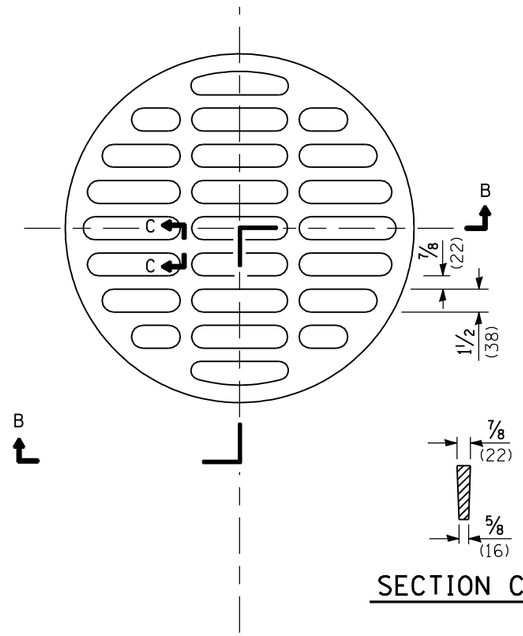

SECTION C-C

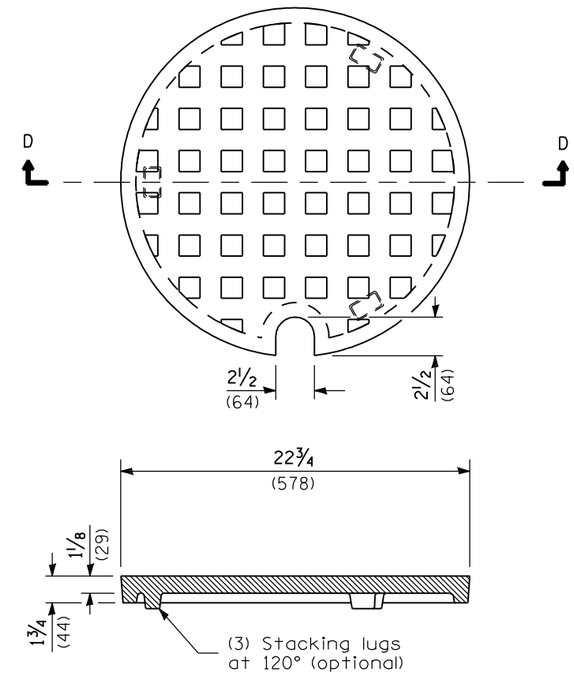

SECTION D-D

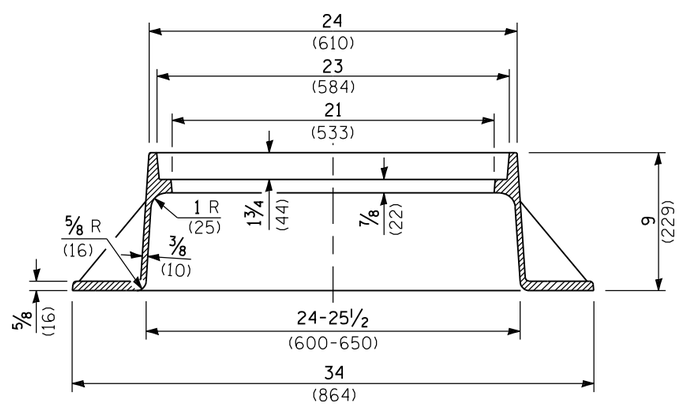

SECTION A-A

Gray Iron

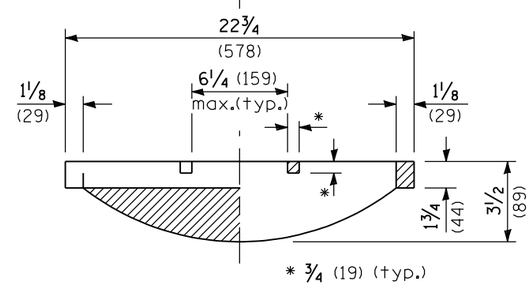

SECTION B-B

CAST OPEN LID

CAST CLOSED LID

Gray Iron Lid

All dimensions are in inches (millimeters) unless otherwise shown.

Illinois Department of Transportation

PASSED January 1, 2009

ENGINEER OF POLICY AND PROCEDURES

APPROVED January 1, 2009

ENGINEER OF DESIGN AND ENVIRONMENT

ISSUED 1-1-97

DATE	REVISIONS
1-1-09	Switched units to
	English (metric).
1-1-04	Removed weights.

FRAME AND LIDS TYPE 1

STANDARD 604001-03

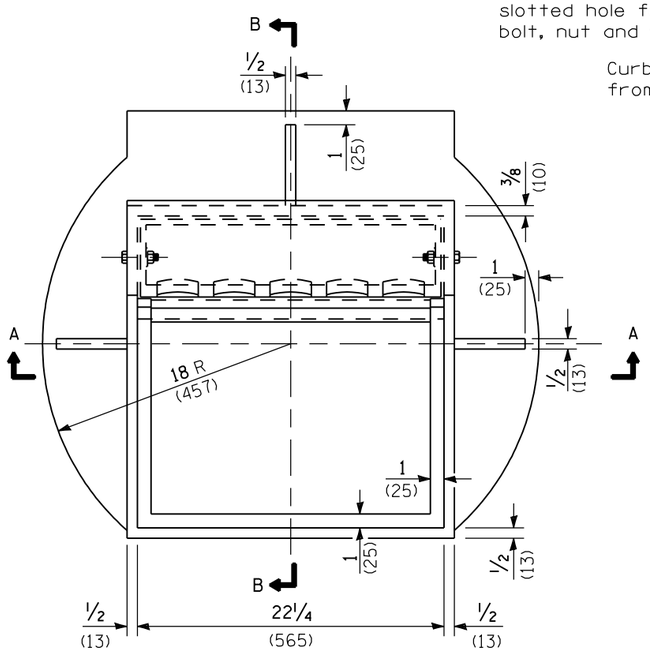

CAST FRAME

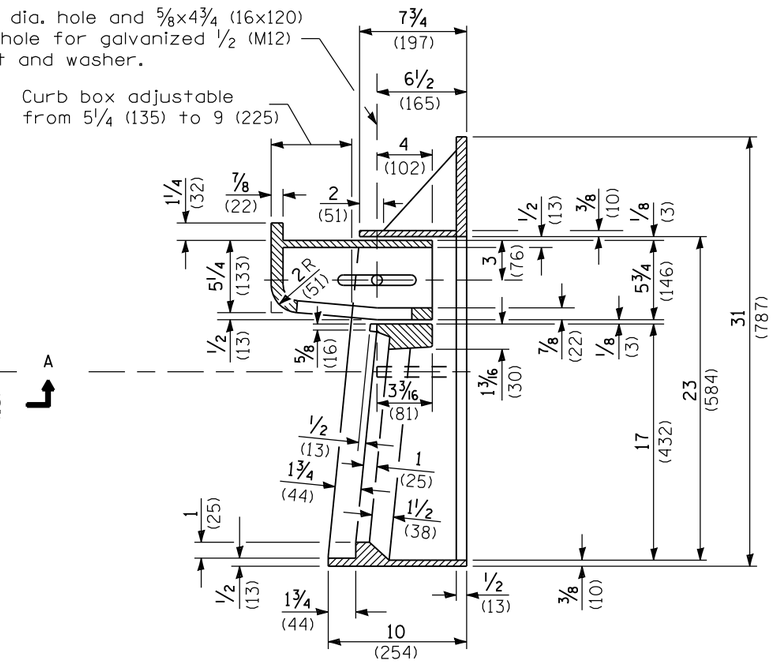

SECTION B-B

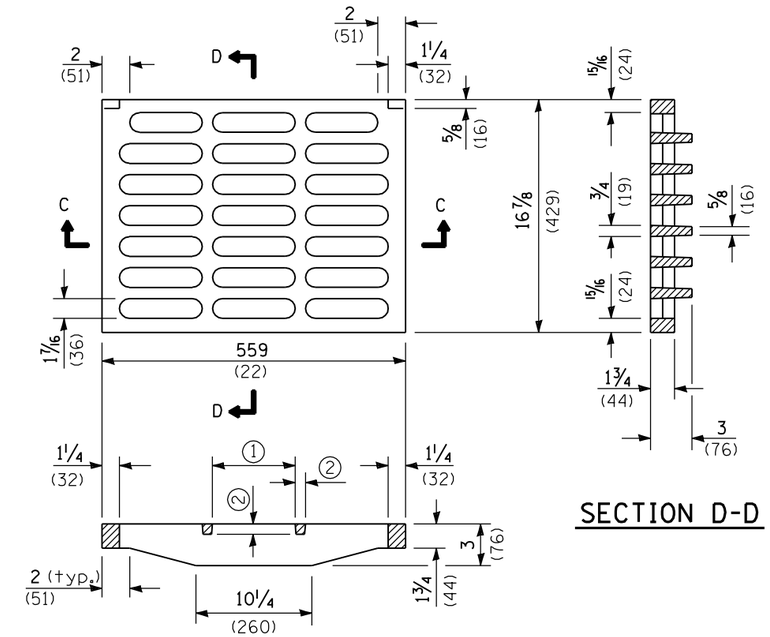

SECTION C-C

① = 6 (152) typ.
② = 3/4 (19) typ.

CAST GRATE

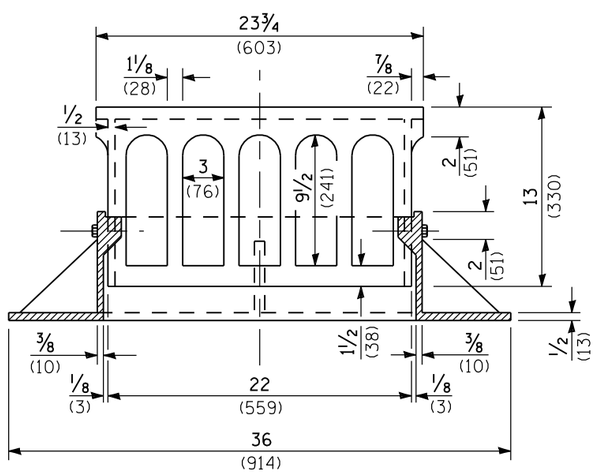

SECTION A-A

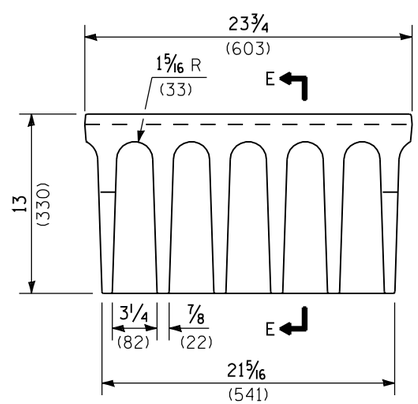

ALTERNATE CURB BOX

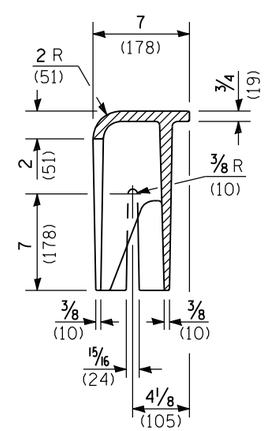

SECTION E-E

All dimensions are in inches (millimeters) unless otherwise shown.

Illinois Department of Transportation

PASSED January 1, 2009
ENGINEER OF POLICY AND PROCEDURES
APPROVED January 1, 2009
ENGINEER OF DESIGN AND ENVIRONMENT

ISSUED 1-1-97

DATE	REVISIONS
1-1-09	Switched units to English (metric).
1-1-08	Added alternate curb box.

FRAME AND GRATE TYPE 3

STANDARD 604006-04

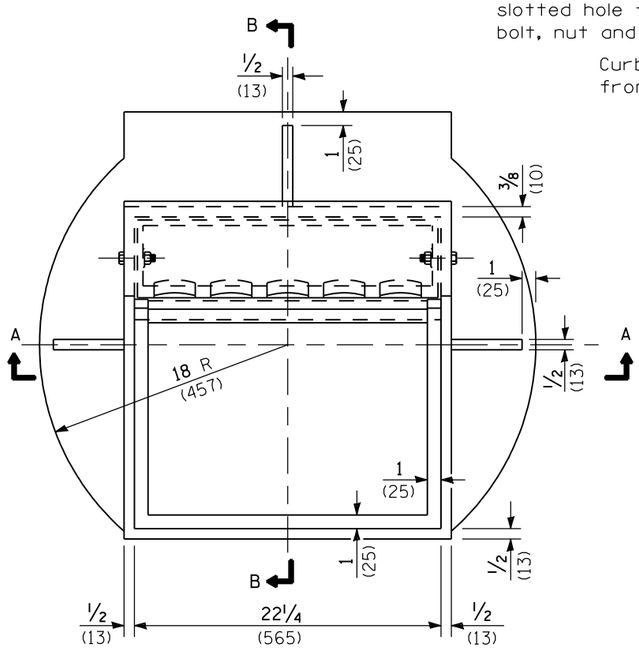

CAST FRAME

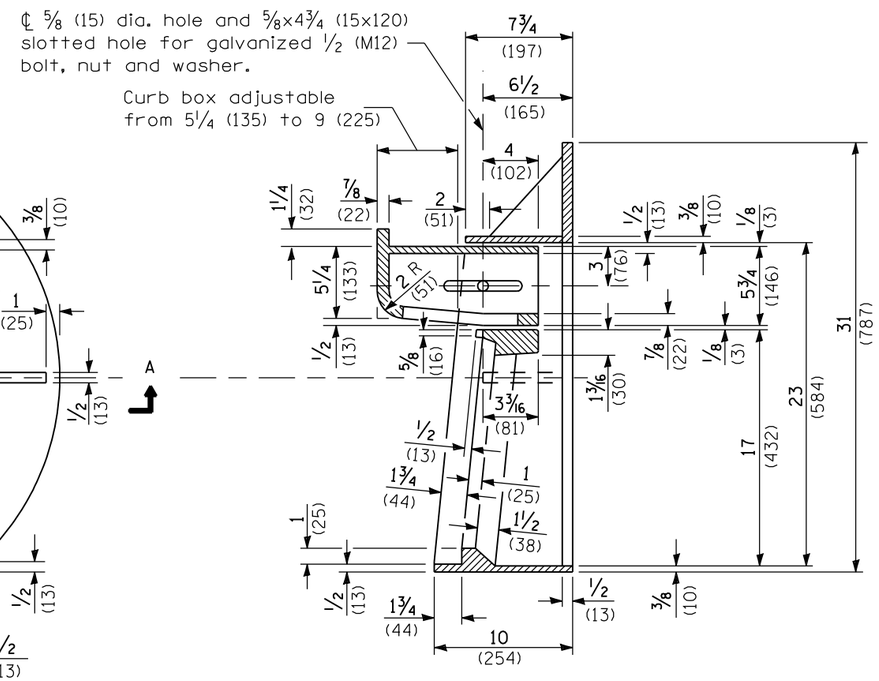

SECTION B-B

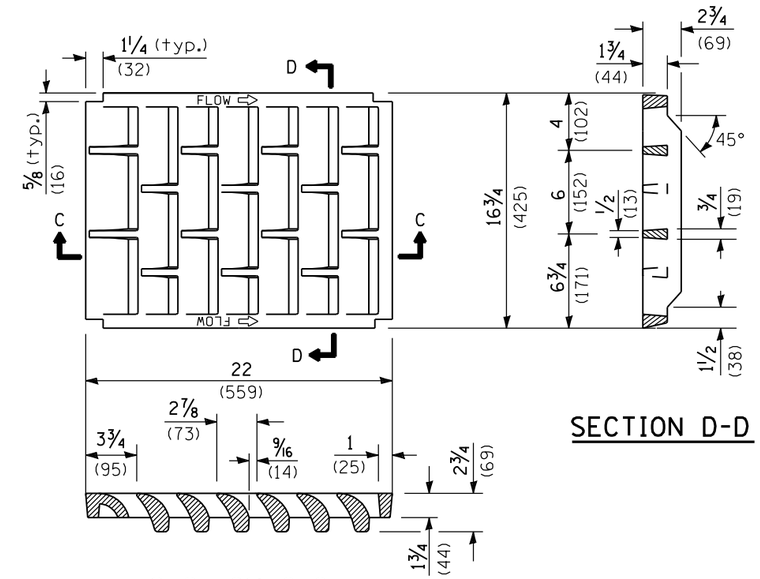

SECTION C-C

CAST GRATE

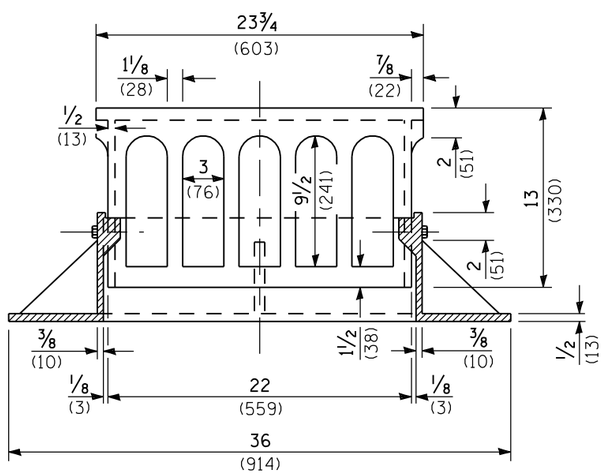

SECTION A-A

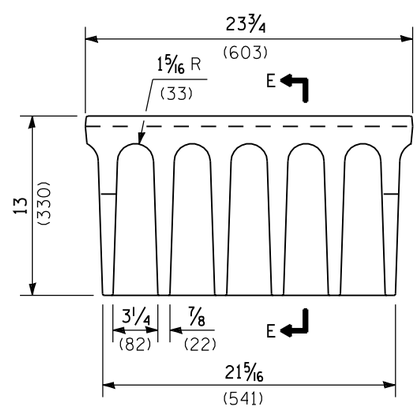

ALTERNATE CURB BOX

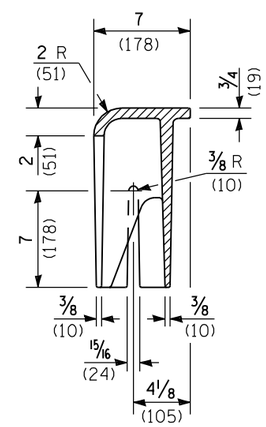

SECTION E-E

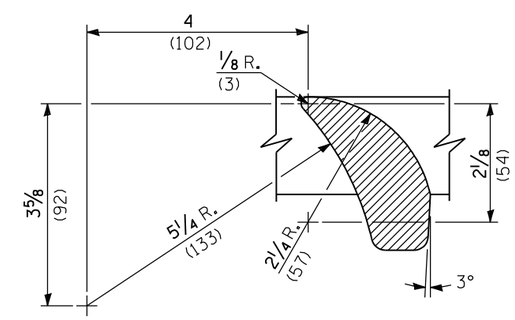

VANE DETAIL

All dimensions are in inches (millimeters) unless otherwise shown.

Illinois Department of Transportation

PASSED January 1, 2009
ENGINEER OF POLICY AND PROCEDURES

APPROVED January 1, 2009
ENGINEER OF DESIGN AND ENVIRONMENT

ISSUED 1-1-97

DATE	REVISIONS
1-1-09	Switched units to English (metric).
1-1-08	Added alternate curb box.

FRAME AND GRATE TYPE 3V

STANDARD 604011-04

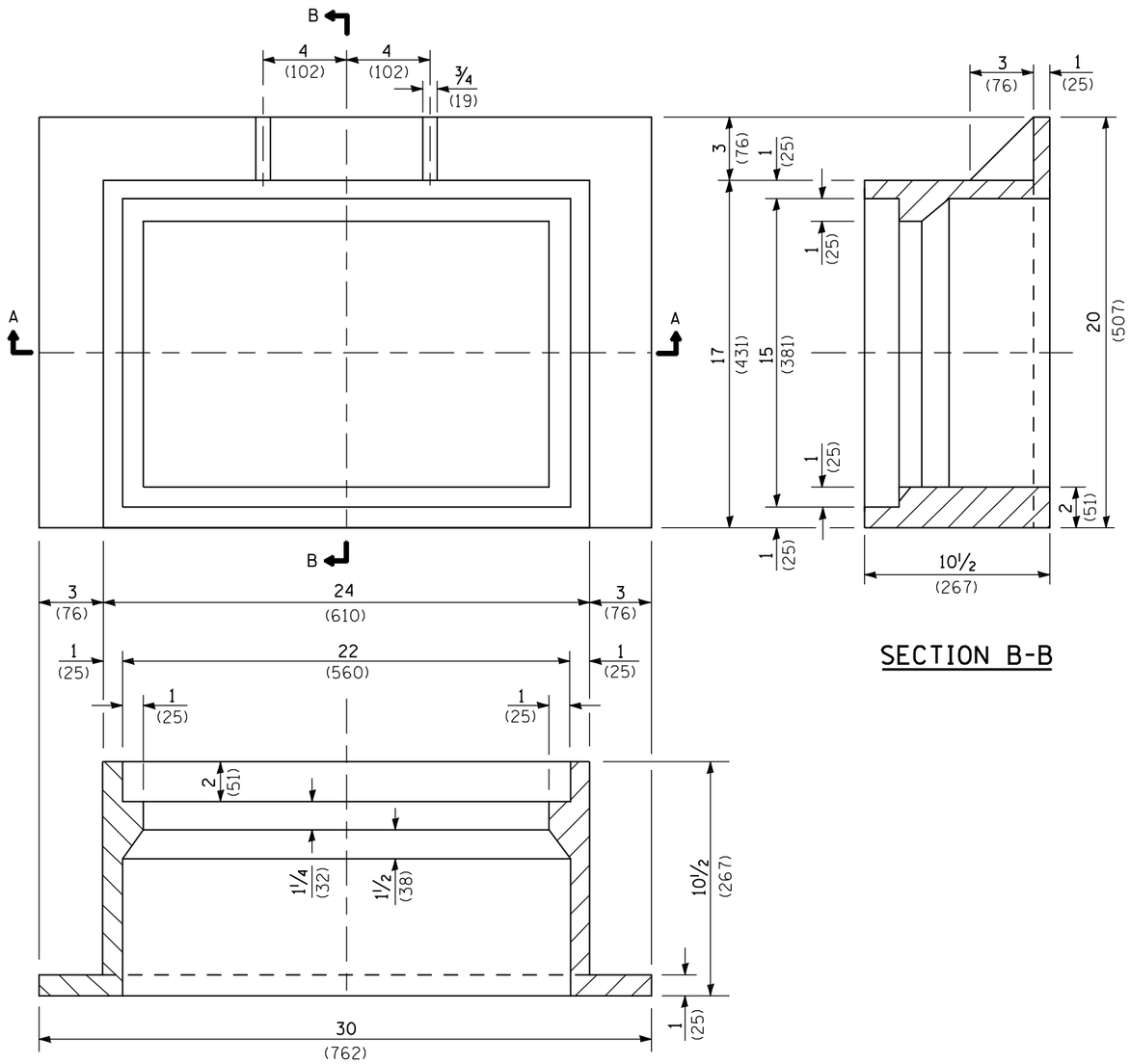

SECTION A-A

SECTION B-B

CAST FRAME

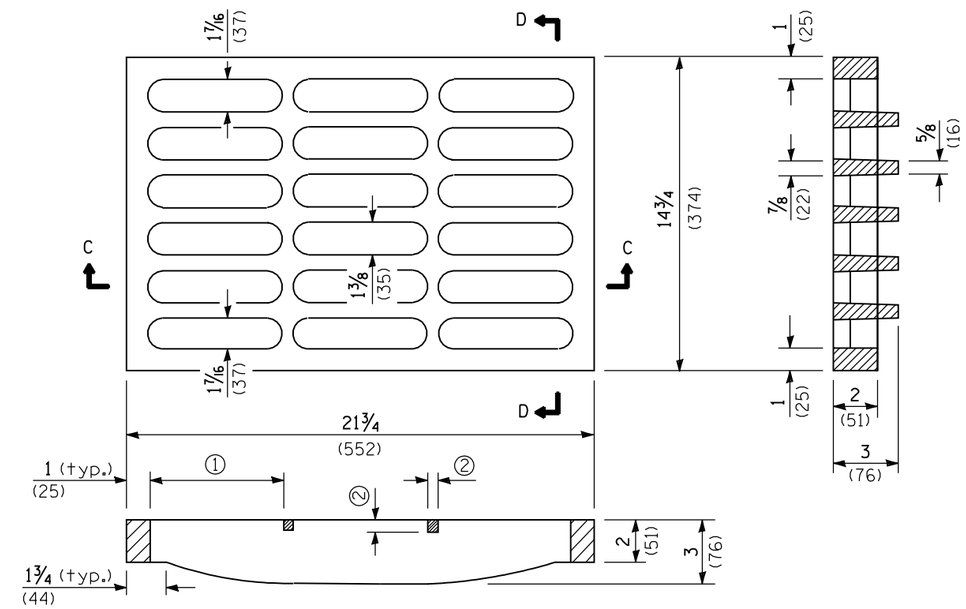

SECTION C-C

① = 6 1/4 (159) max. (typ.)

② = 3/4 (19) min. (typ.)

SECTION D-D

CAST GRATE

All dimensions are in inches (millimeters) unless otherwise shown.

Illinois Department of Transportation

PASSED January 1, 2009

ENGINEER OF POLICY AND PROCEDURES

APPROVED January 1, 2009

ENGINEER OF DESIGN AND ENVIRONMENT

ISSUED 1-1-97

DATE	REVISIONS
1-1-09	Switched units to English (metric).
1-1-04	Removed weights.

FRAME AND GRATE TYPE 4

STANDARD 604016-02

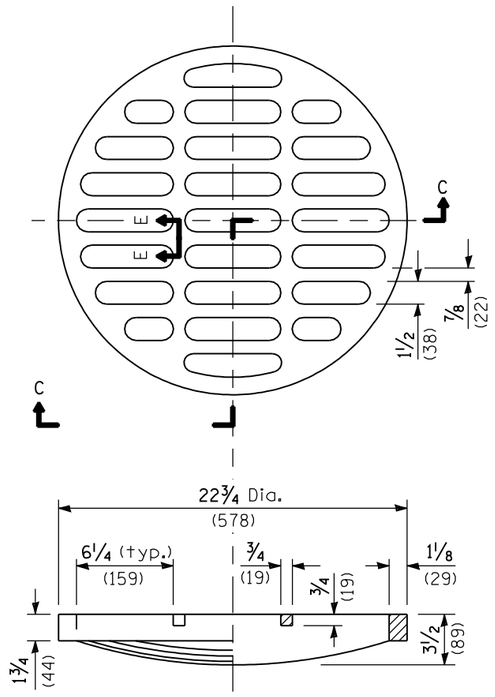

SECTION C-C

CAST OPEN LID

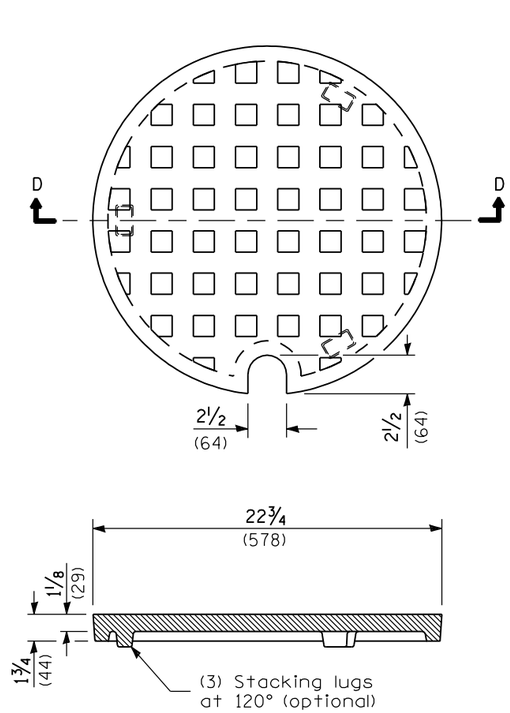

SECTION D-D

CAST CLOSED LID

Gray Iron

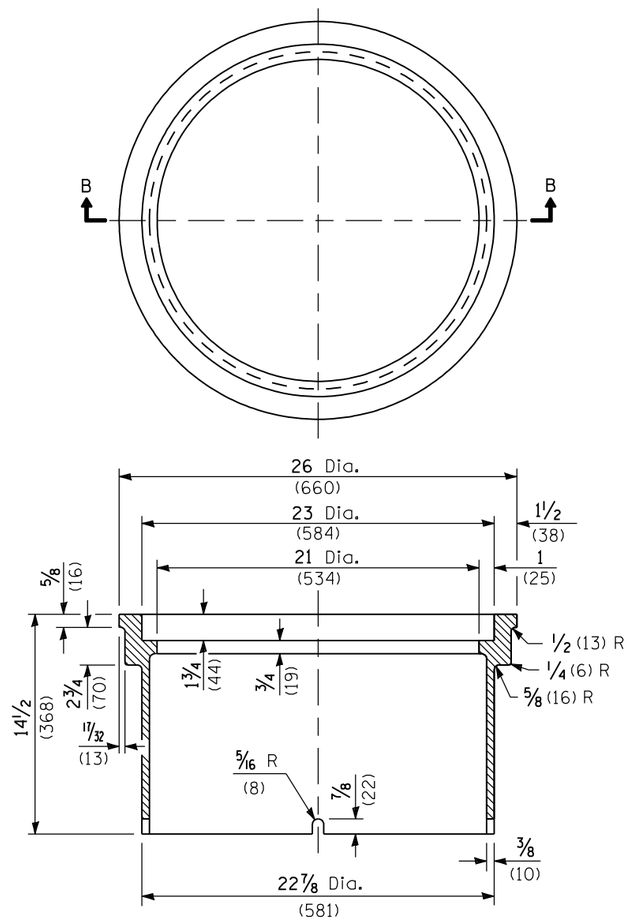

SECTION B-B

CAST FRAME

Gray Iron

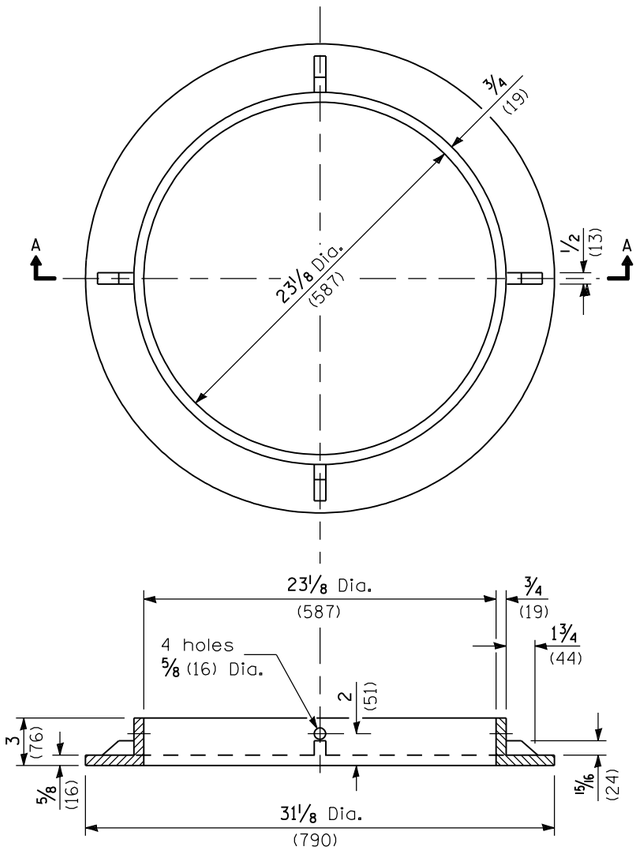

SECTION A-A

CAST BASE

Gray Iron

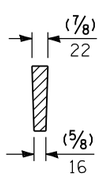

SECTION E-E

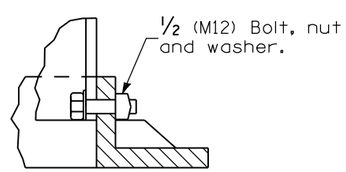

DETAIL OF BOLTING FRAME TO BASE

NOTE: Bolts shall be removed after pavement has been placed.

GENERAL NOTES

The four holes in the cast base may be rotated 45° from the position shown in section A-A

All dimensions are in inches (millimeters) unless otherwise shown.

Illinois Department of Transportation

PASSED January 1, 2009

ENGINEER OF POLICY AND PROCEDURES

APPROVED January 1, 2009

ENGINEER OF DESIGN AND ENVIRONMENT

ISSUED 1-1-97

DATE	REVISIONS
1-1-09	Switched units to
	English (metric).
1-1-97	Renum. Standard 2226-5.
	Revised Cast Closed Lid.

BASE, FRAME AND LIDS TYPE 5

STANDARD 604021-02

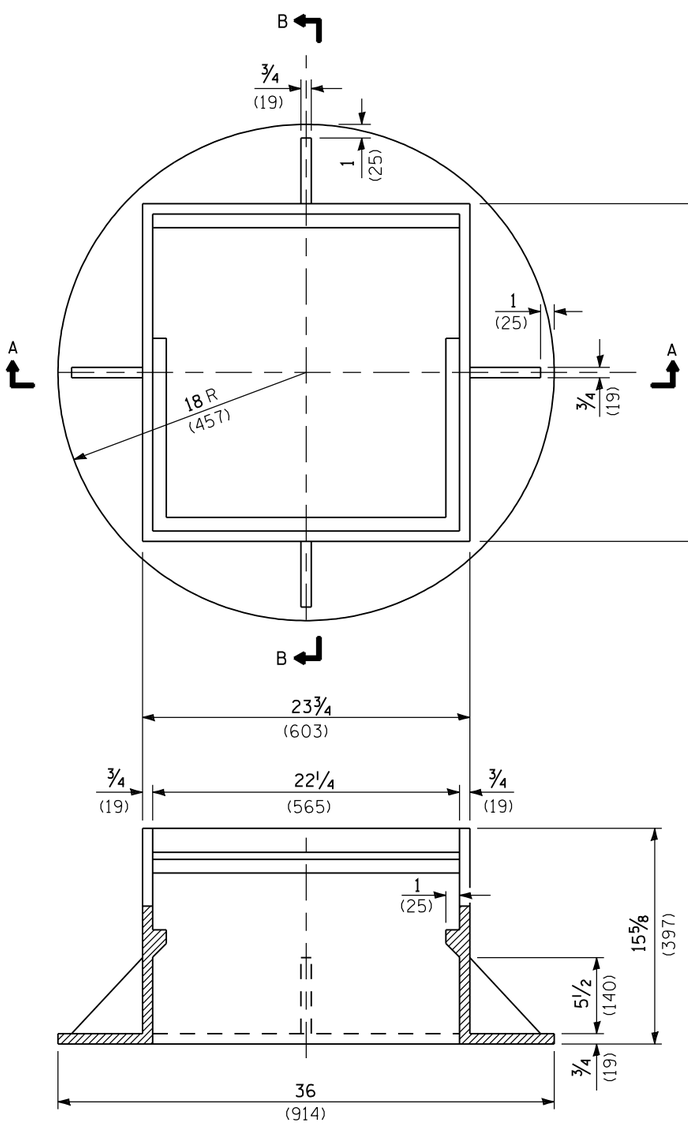

SECTION A-A

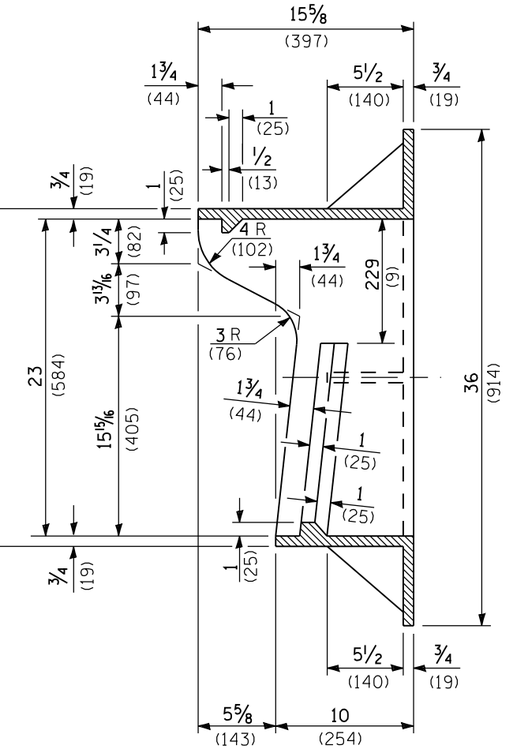

SECTION B-B

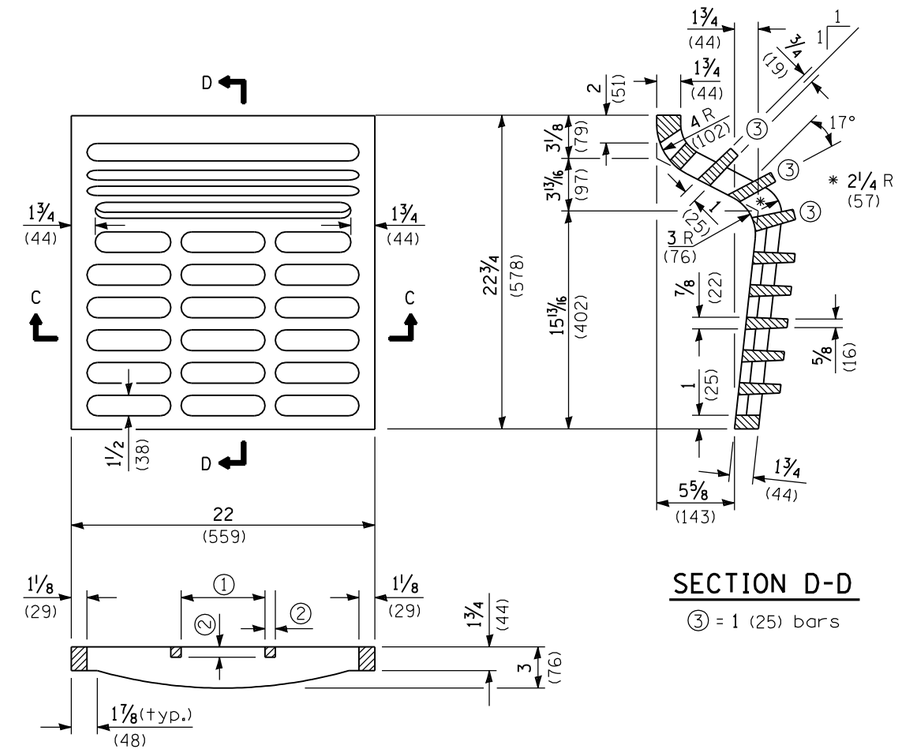

SECTION C-C

① = 159 (6 1/4) max. (typ.)
② = 19 (3/4) min. (typ.)

SECTION D-D

③ = 1 (25) bars

CAST GRATE

CAST FRAME

All dimensions are in inches (millimeters) unless otherwise shown.

Illinois Department of Transportation

PASSED January 1, 2009
ENGINEER OF POLICY AND PROCEDURES
APPROVED January 1, 2009
ENGINEER OF DESIGN AND ENVIRONMENT

ISSUED 1-1-97

DATE	REVISIONS
1-1-09	Switched units to English (metric).
1-1-04	Removed weights

FRAME AND GRATE TYPE 6

STANDARD 604026-02

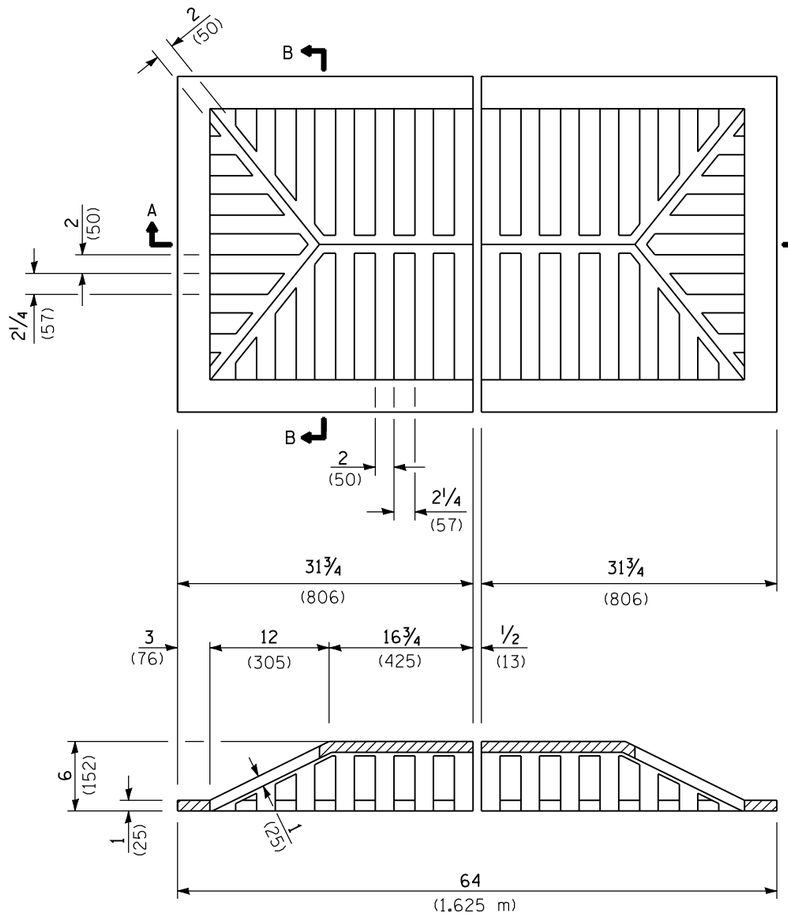

SECTION A-A

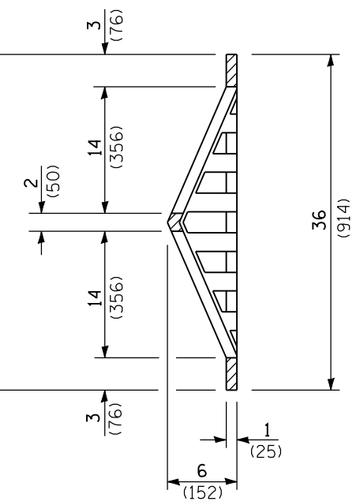

SECTION B-B

CAST GRATE

All dimensions are in inches (millimeters) unless otherwise shown.

Illinois Department of Transportation

PASSED January 1, 2009
ENGINEER OF POLICY AND PROCEDURES
APPROVED January 1, 2009
ENGINEER OF DESIGN AND ENVIRONMENT

ISSUED 1-1-97

DATE	REVISIONS
1-1-09	Switched units to English (metric).
1-1-04	Removed weights.

GRATE TYPE 7

STANDARD 604031-02

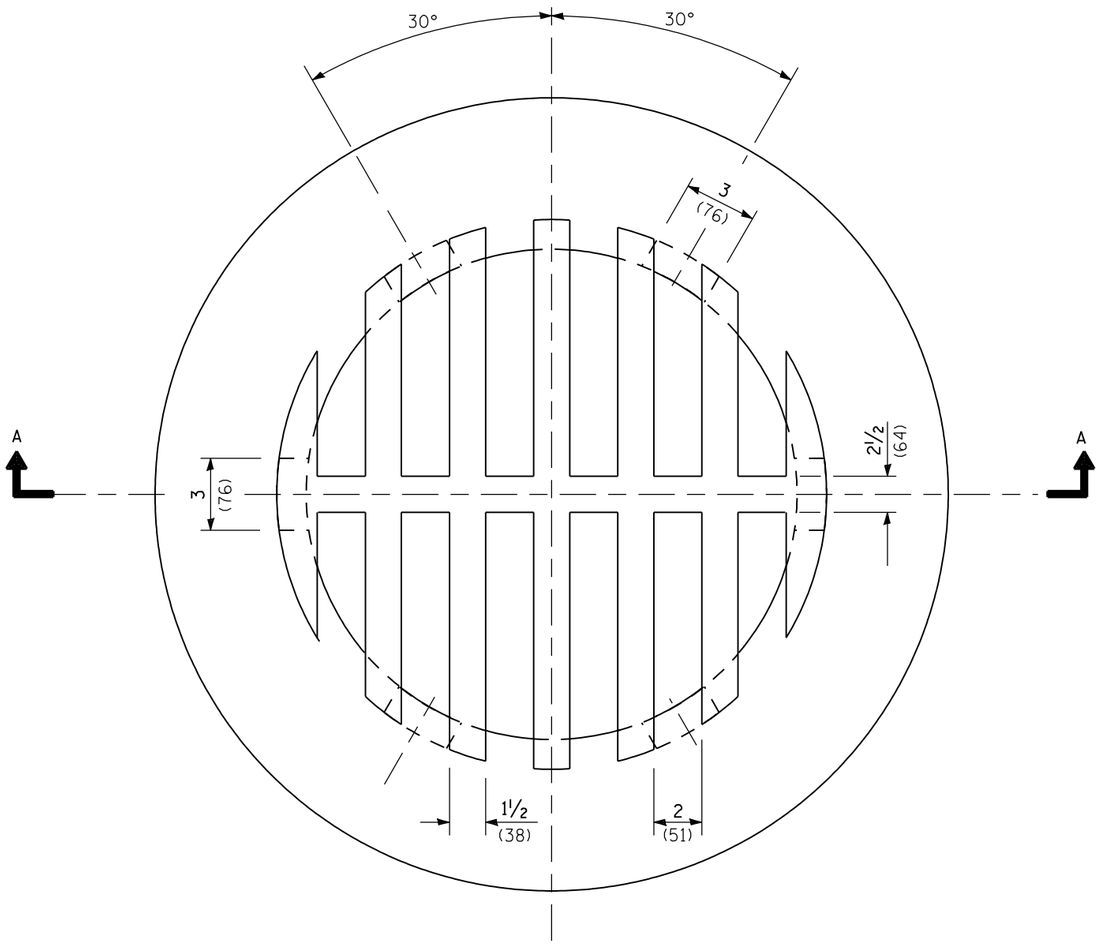

CAST GRATE

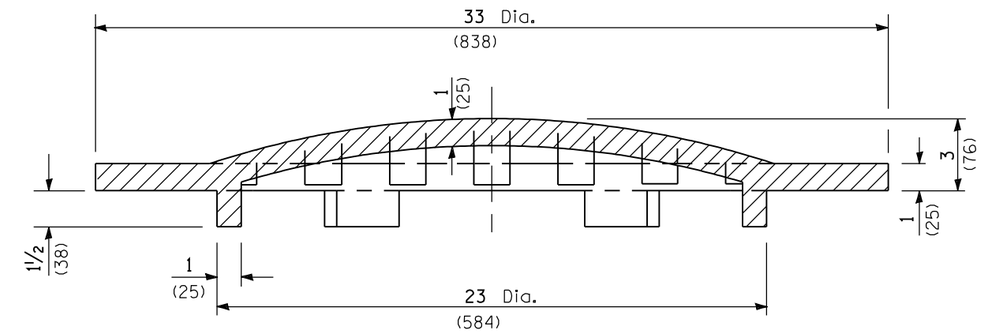

SECTION A-A

All dimensions are in inches (millimeters) unless otherwise shown.

Illinois Department of Transportation

PASSED January 1, 2009
ENGINEER OF POLICY AND PROCEDURES
APPROVED January 1, 2009
ENGINEER OF DESIGN AND ENVIRONMENT

ISSUED 1-1-97

DATE	REVISIONS
1-1-09	Switched units to English (metric).
1-1-04	Removed weights.

GRATE TYPE 8

STANDARD 604036–02

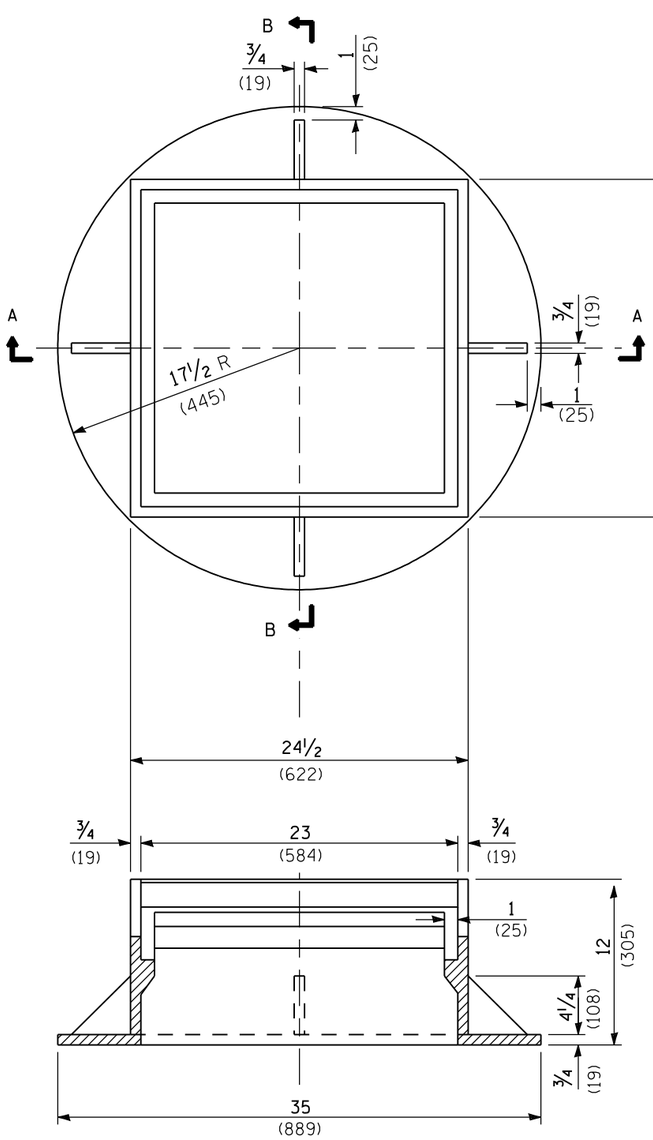

SECTION A-A

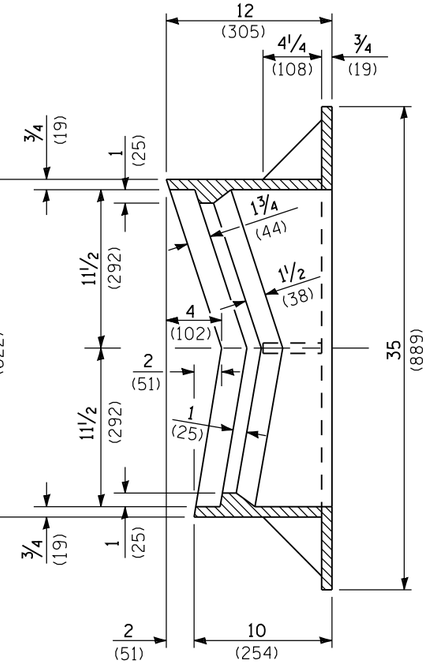

SECTION B-B

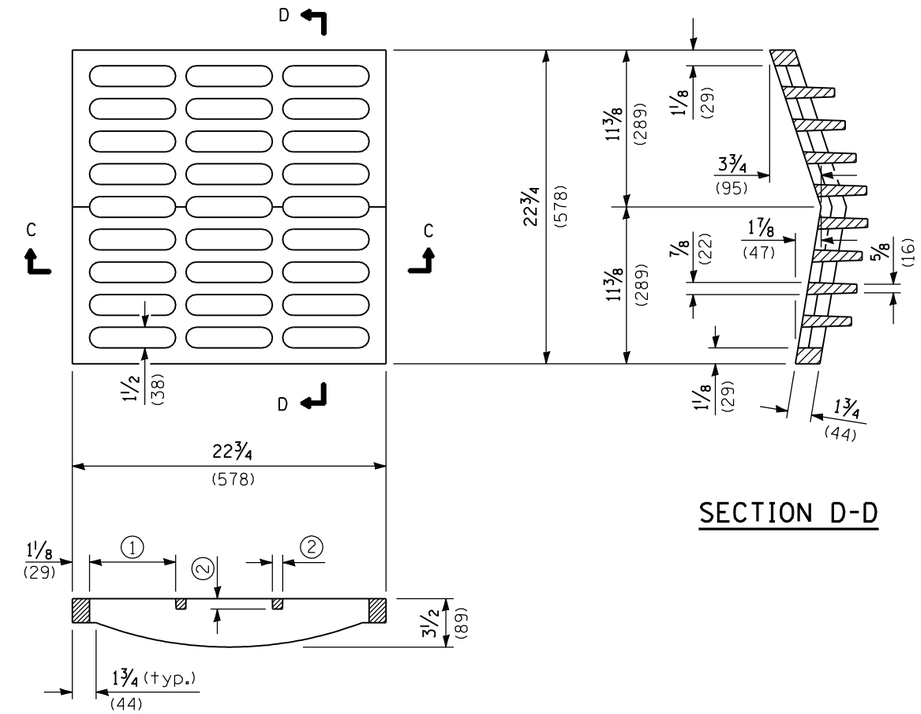

SECTION D-D

SECTION C-C

① = 6 1/4 (159) max. (typ.)
② = 3/4 (19) min. (typ.)

CAST GRATE

CAST FRAME

All dimensions are in inches (millimeters) unless otherwise shown.

Illinois Department of Transportation

PASSED January 1, 2009
ENGINEER OF POLICY AND PROCEDURES
APPROVED January 1, 2009
ENGINEER OF DESIGN AND ENVIRONMENT

ISSUED 1-1-97

DATE	REVISIONS
1-1-09	Switched units to English (metric).
1-1-04	Removed weights.

FRAME AND GRATE TYPE 9

STANDARD 604041-02

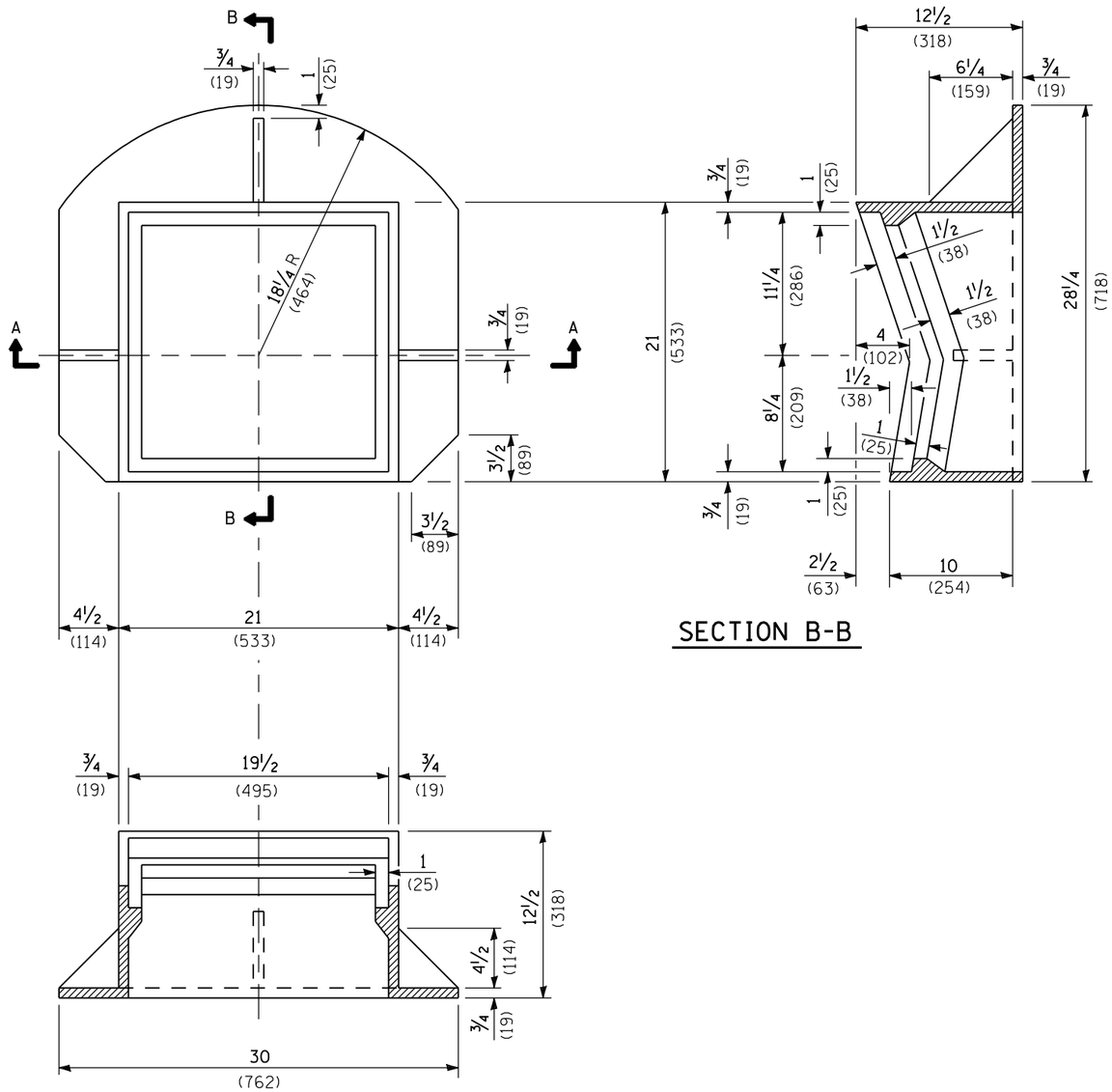

SECTION A-A

SECTION B-B

CAST FRAME

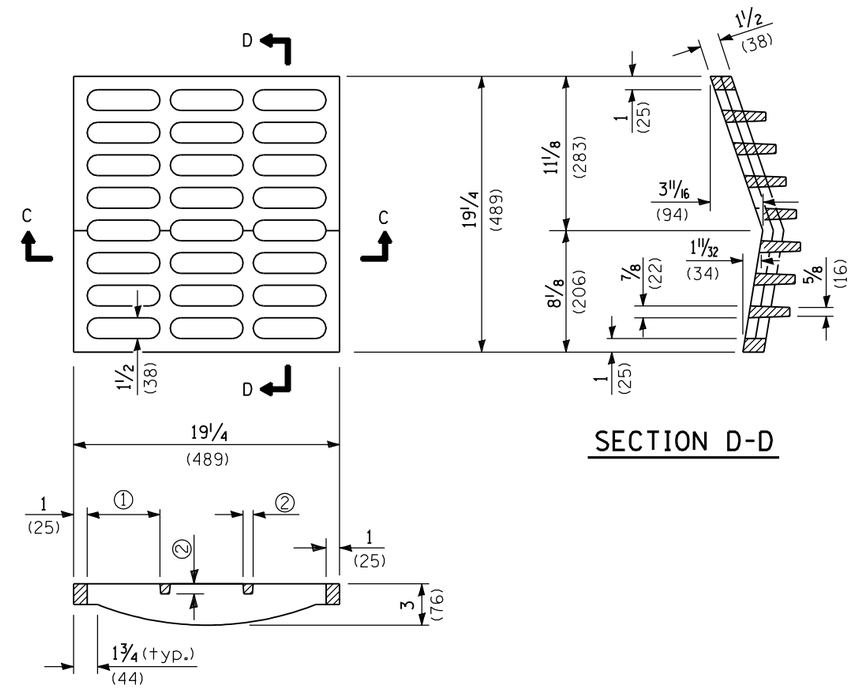

SECTION C-C

① = 6 1/4 (159) max. (typ.)
② = 3/4 (19) min. (typ.)

SECTION D-D

CAST GRATE

All dimensions are in inches (millimeters) unless otherwise shown.

Illinois Department of Transportation

PASSED January 1, 2009
ENGINEER OF POLICY AND PROCEDURES
APPROVED January 1, 2009
ENGINEER OF DESIGN AND ENVIRONMENT

ISSUED 1-1-97

DATE	REVISIONS
1-1-09	Switched units to English (metric).
1-1-04	Removed weights.

FRAME AND GRATE TYPE 10

STANDARD 604046-02

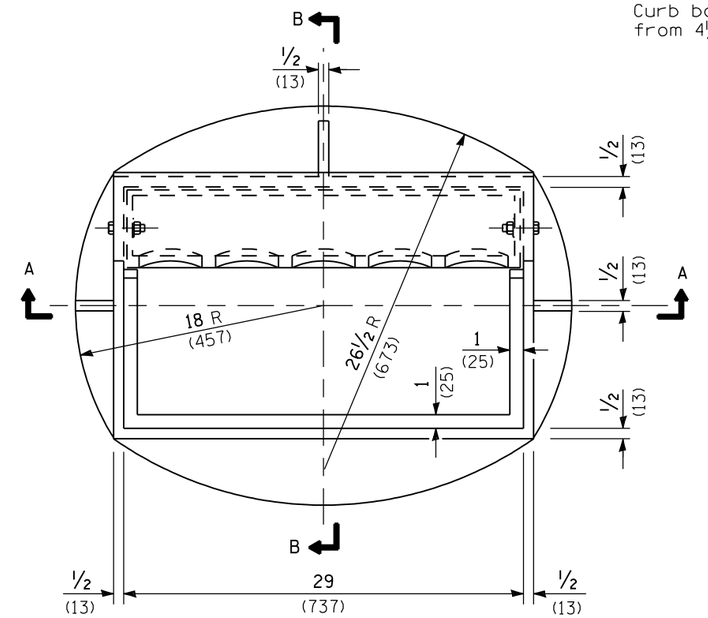

CAST FRAME

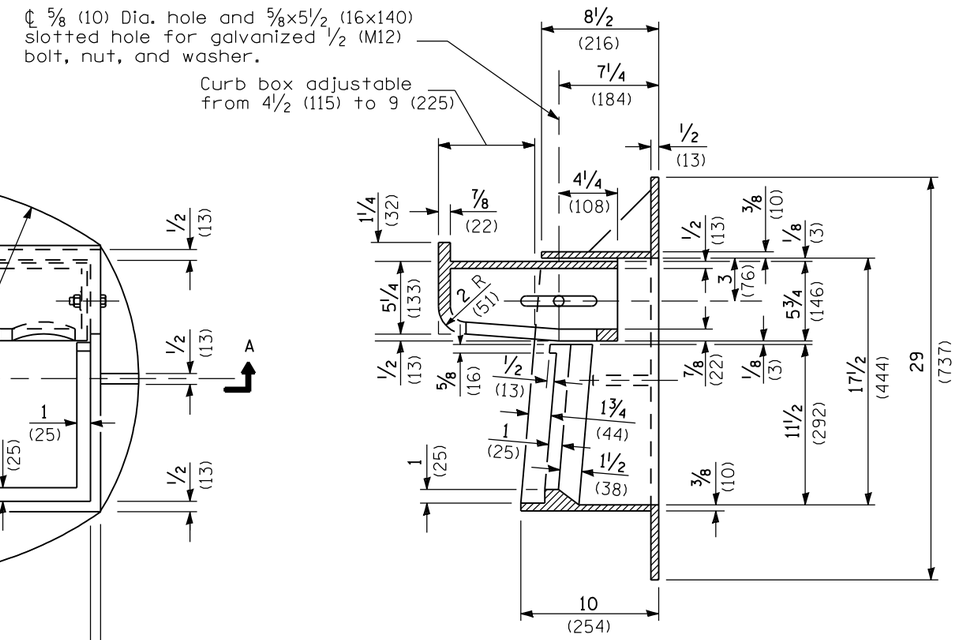

SECTION B-B

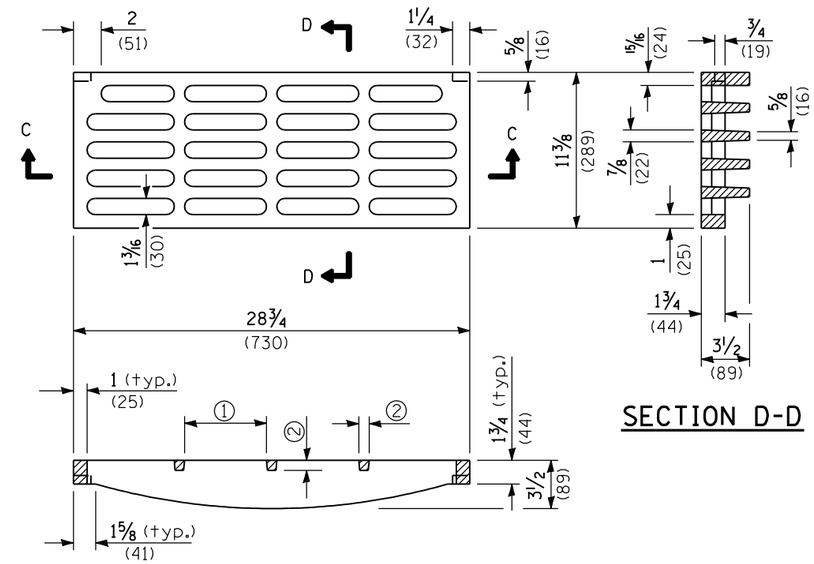

SECTION C-C

① = 6 1/4 (159) max. (typ.)
② = 3/4 (19) min. (typ.)

CAST GRATE

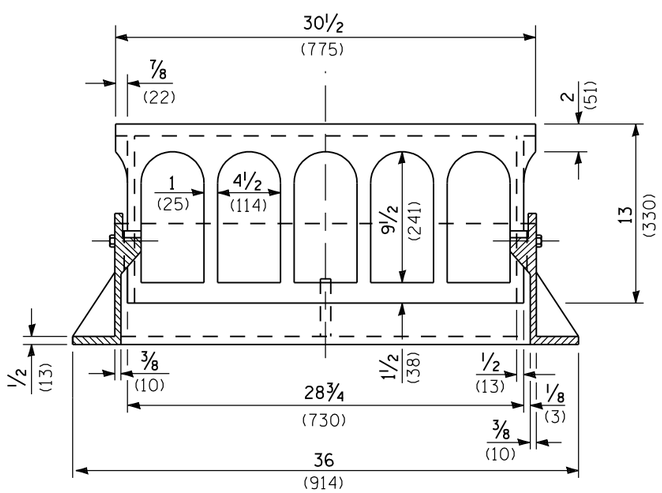

SECTION A-A

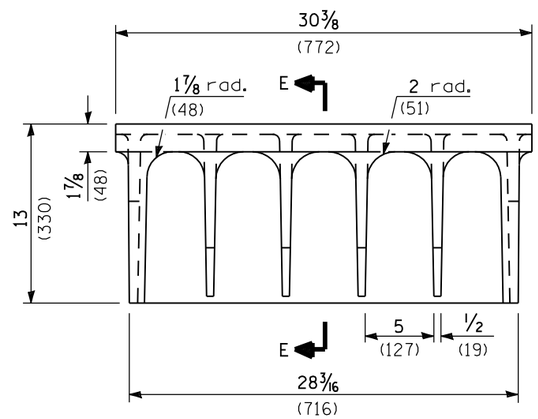

ALTERNATE CURB BOX

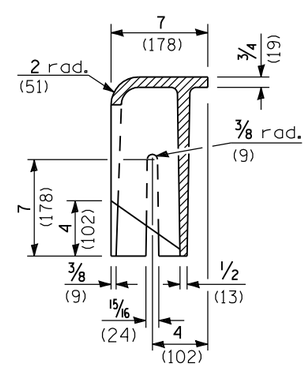

SECTION E-E

All dimensions are in inches (millimeters) unless otherwise shown.

Illinois Department of Transportation

PASSED January 1, 2009
ENGINEER OF POLICY AND PROCEDURES
APPROVED January 1, 2009
ENGINEER OF DESIGN AND ENVIRONMENT

ISSUED 1-1-97

DATE	REVISIONS
4-1-09	Switched units to English (metric).
4-1-06	Added alternate curb box.

FRAME AND GRATE TYPE 11

STANDARD 604051-03

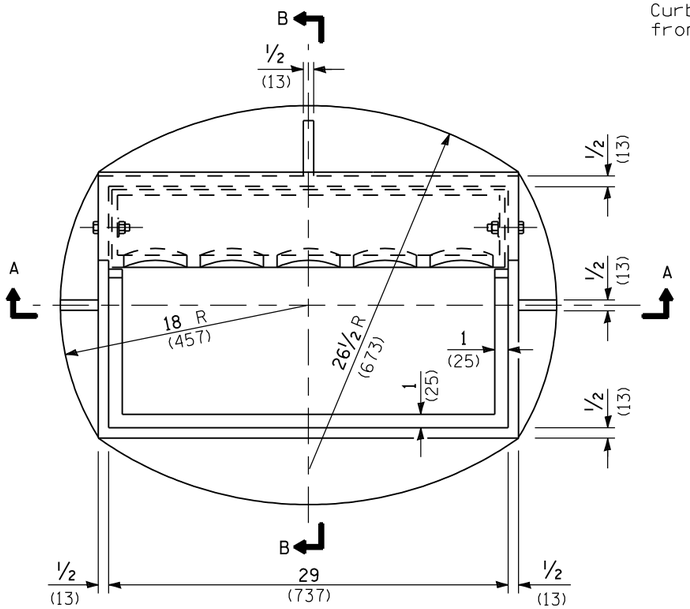

CAST FRAME

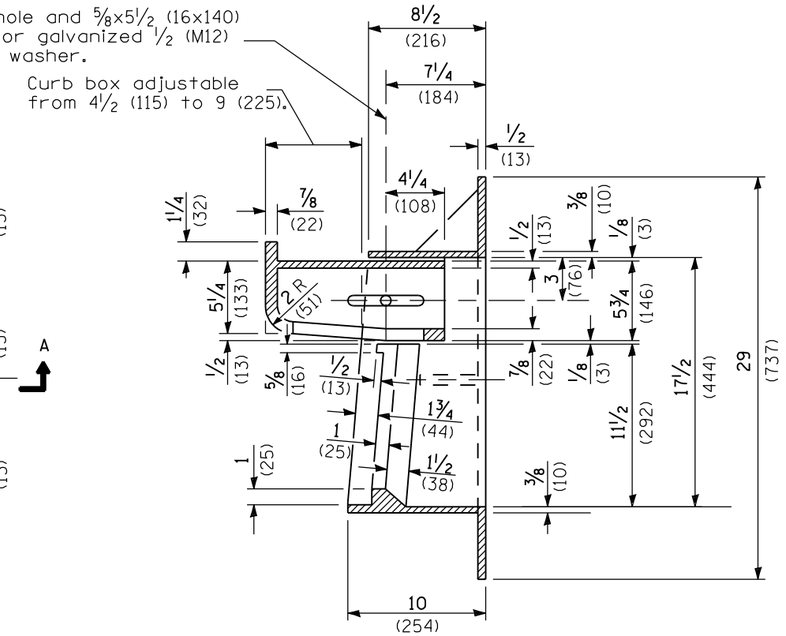

SECTION B-B

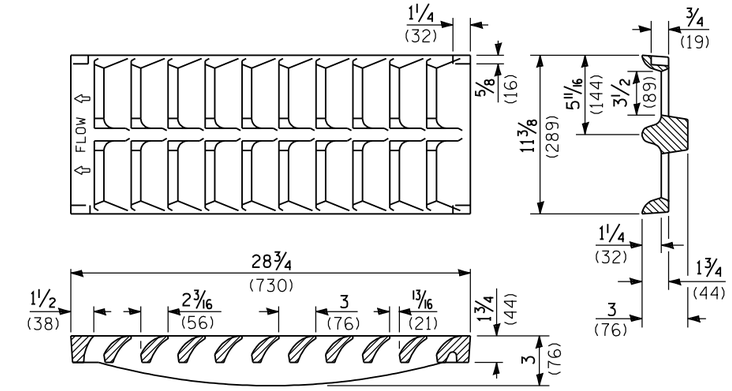

CAST GRATE

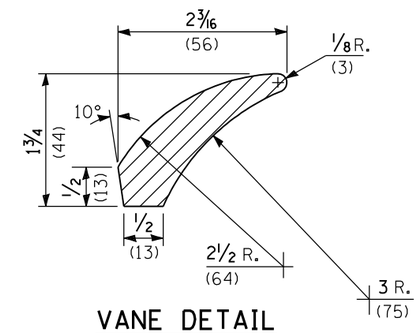

VANE DETAIL

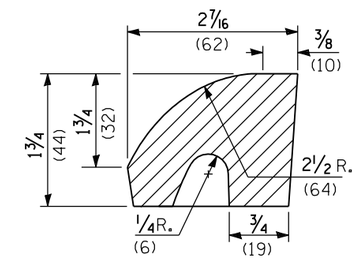

FRONT VANE DETAIL

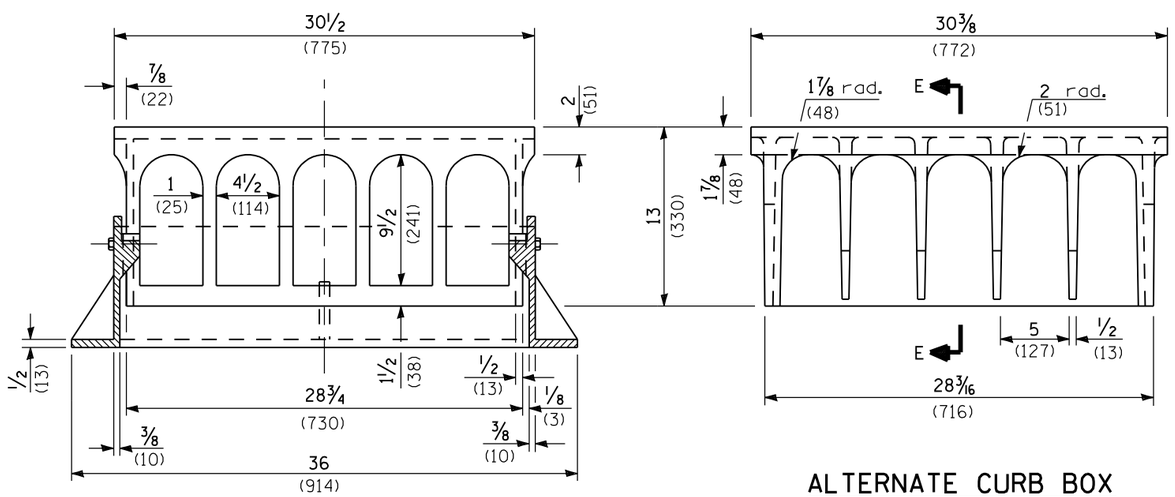

SECTION A-A

ALTERNATE CURB BOX

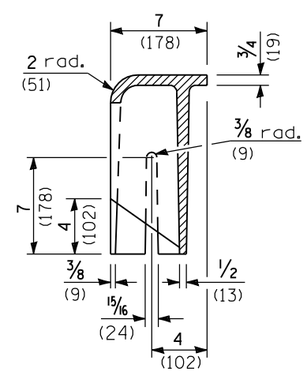

SECTION E-E

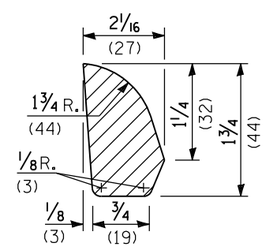

SIDE RIB DETAIL

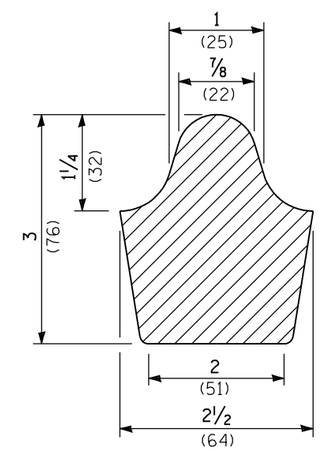

MIDDLE RIB DETAIL

All dimensions are in inches (millimeters) unless otherwise shown.

Illinois Department of Transportation

PASSED January 1, 2009
ENGINEER OF POLICY AND PROCEDURES
APPROVED January 1, 2009
ENGINEER OF DESIGN AND ENVIRONMENT

ISSUED 1-1-97

DATE	REVISIONS
1-1-09	Switched units to English (metric).
4-1-06	Added alternate curb box.

FRAME AND GRATE TYPE 11V

STANDARD 604056-03

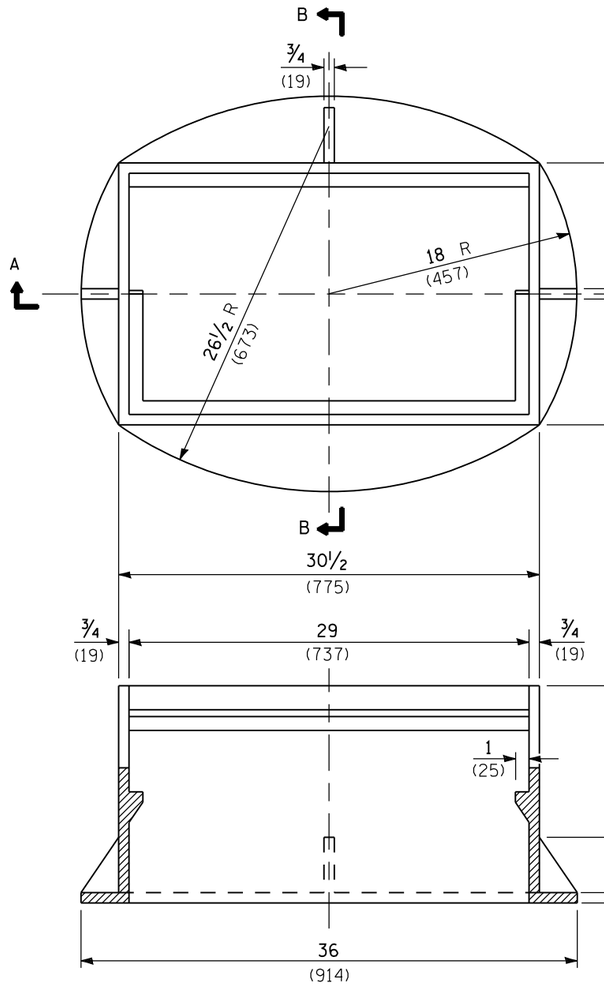

SECTION A-A

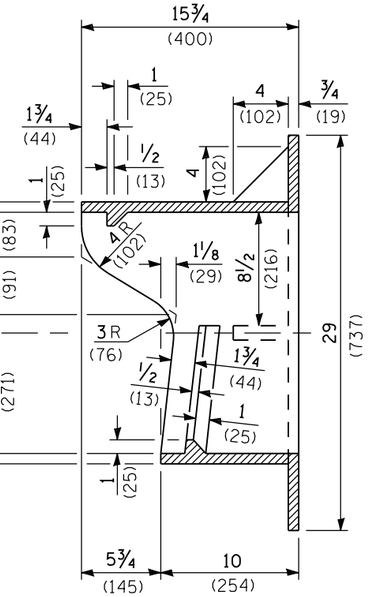

SECTION B-B

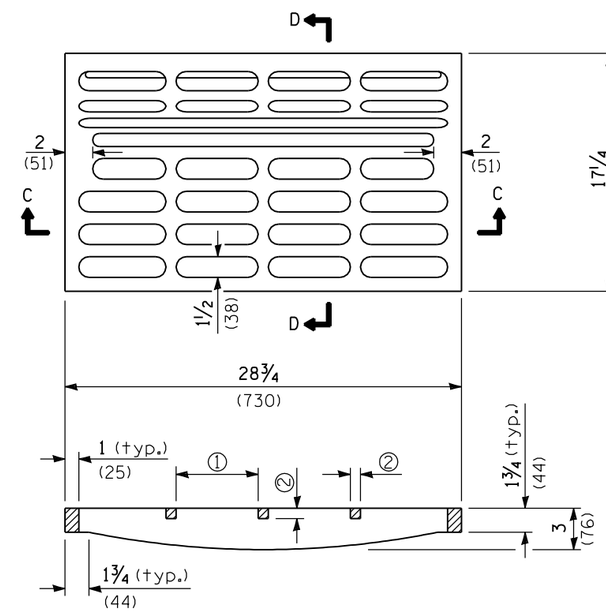

SECTION C-C

① = 6 1/4 (159) max. (typ.)

② = 3/4 (19) min. (typ.)

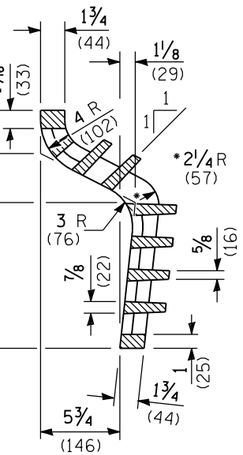

SECTION D-D

CAST GRATE

CAST FRAME

All dimensions are in inches (millimeters) unless otherwise shown.

Illinois Department of Transportation

PASSED January 1, 2009

ENGINEER OF POLICY AND PROCEDURES

APPROVED January 1, 2009

ENGINEER OF DESIGN AND ENVIRONMENT

ISSUED 1-1-97

DATE	REVISIONS
1-1-09	Switched units to English (metric).
1-1-04	Removed weights.

FRAME AND GRATE TYPE 12

STANDARD 604061-02

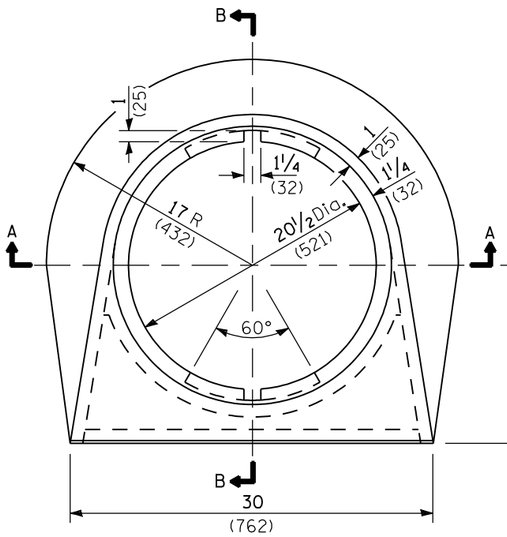

CAST FRAME
(GRAY IRON)

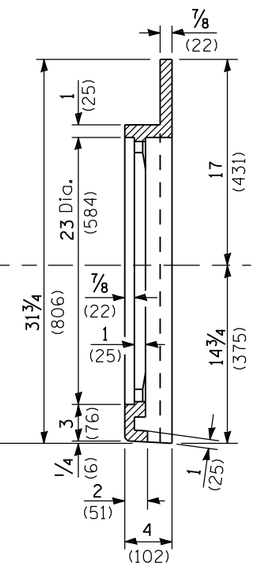

SECTION B-B

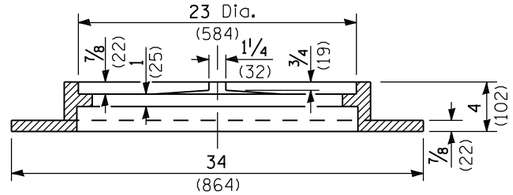

SECTION A-A

NOTE:
Warp sloping face of curbs in a distance of 5' (1.5 m) to the cross section shown at the frame.

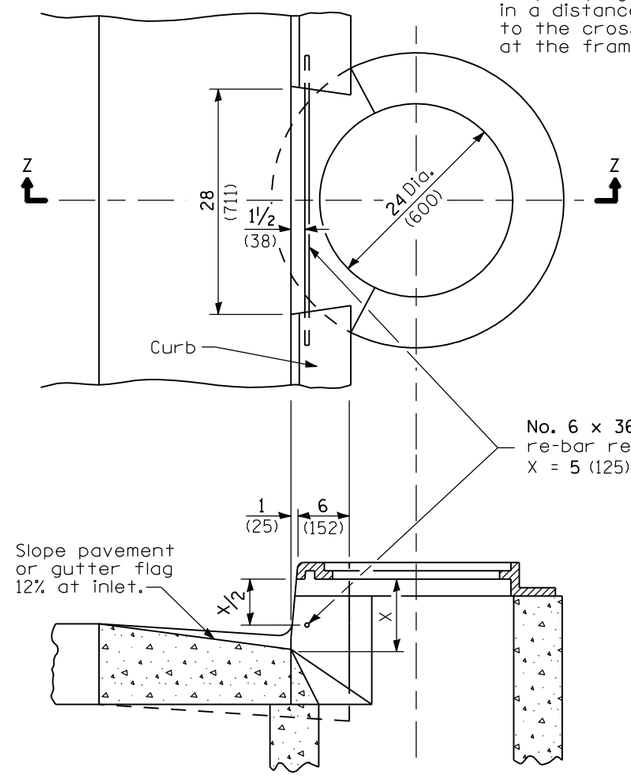

SECTION Z-Z
(WITH FRAME)
CASE II

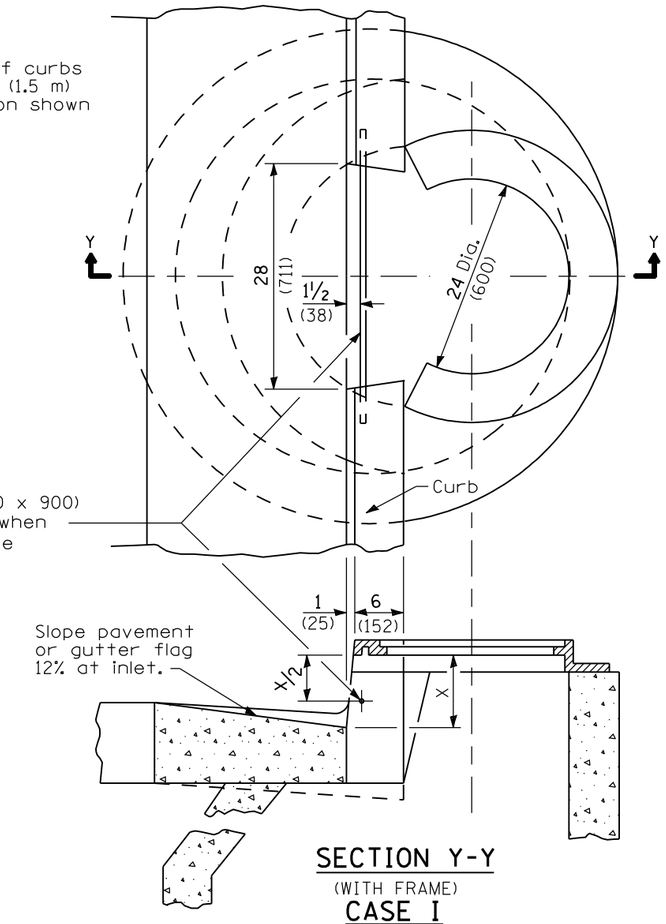

SECTION Y-Y
(WITH FRAME)
CASE I

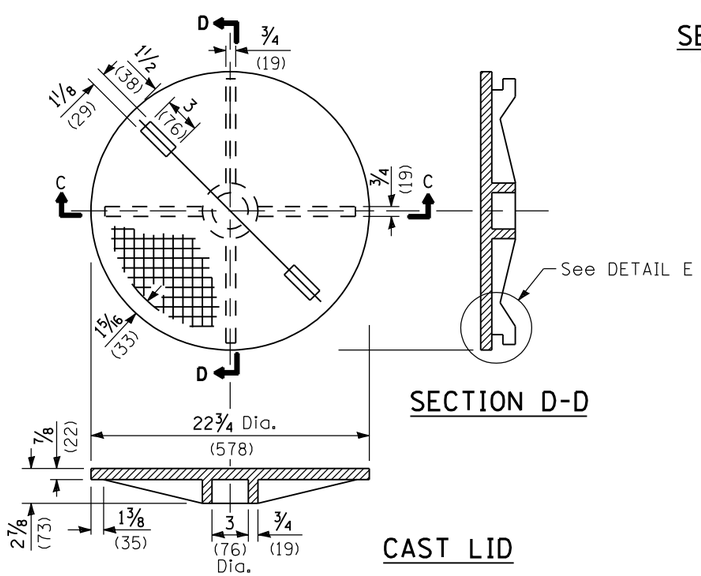

SECTION D-D

CAST LID

SECTION C-C

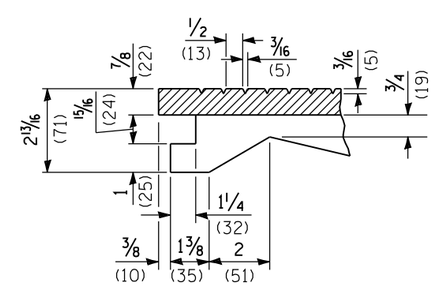

DETAIL E

All dimensions are in inches (millimeters) unless otherwise shown.

Illinois Department of Transportation

PASSED January 1, 2009
ENGINEER OF POLICY AND PROCEDURES
APPROVED January 1, 2009
ENGINEER OF DESIGN AND ENVIRONMENT

ISSUED 1-1-97

DATE	REVISIONS
1-1-04	Switched units to English (metric).
1-1-04	Removed weights.

FRAME AND LID TYPE 15

STANDARD 604066-02

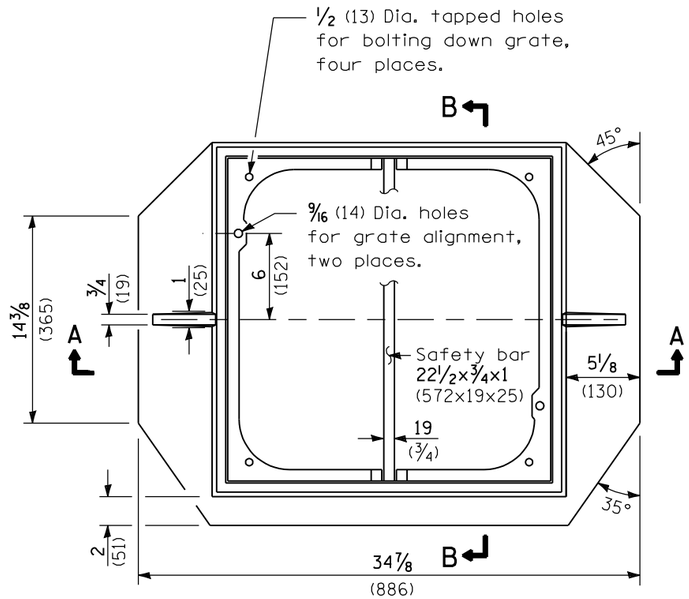

PLAN

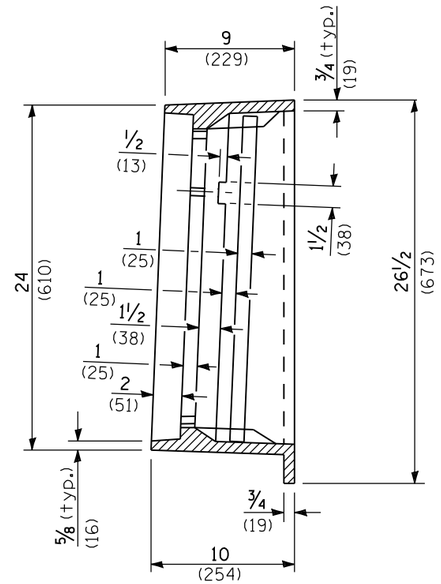

SECTION B-B

CAST FRAME

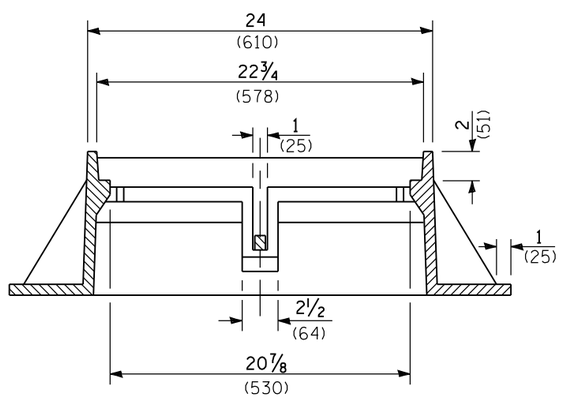

SECTION A-A

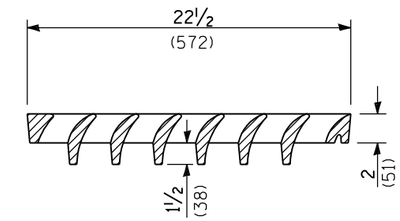

SECTION C-C

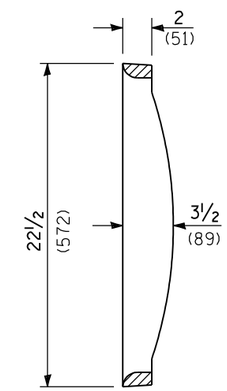

SECTION D-D

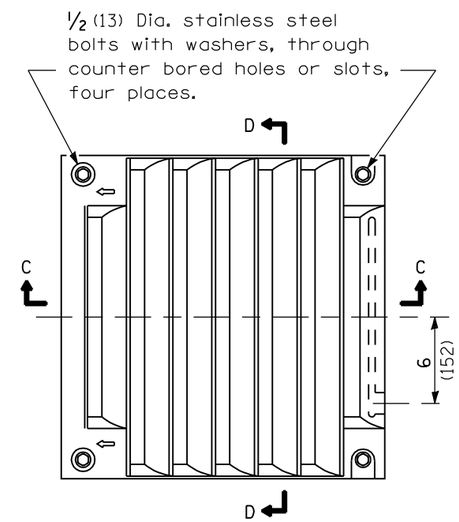

CAST GRATE

All dimensions are in inches (millimeters) unless otherwise shown.

Illinois Department of Transportation

PASSED January 1, 2009
ENGINEER OF POLICY AND PROCEDURES

APPROVED January 1, 2009
ENGINEER OF DESIGN AND ENVIRONMENT

ISSUED 1-1-97

DATE	REVISIONS
1-1-09	Switched units to English (metric).
1-1-07	Revised frame flanges, changed to a bolt down grate w/ deeper vanes.

FRAME AND GRATE TYPE 20

STANDARD 604071-04

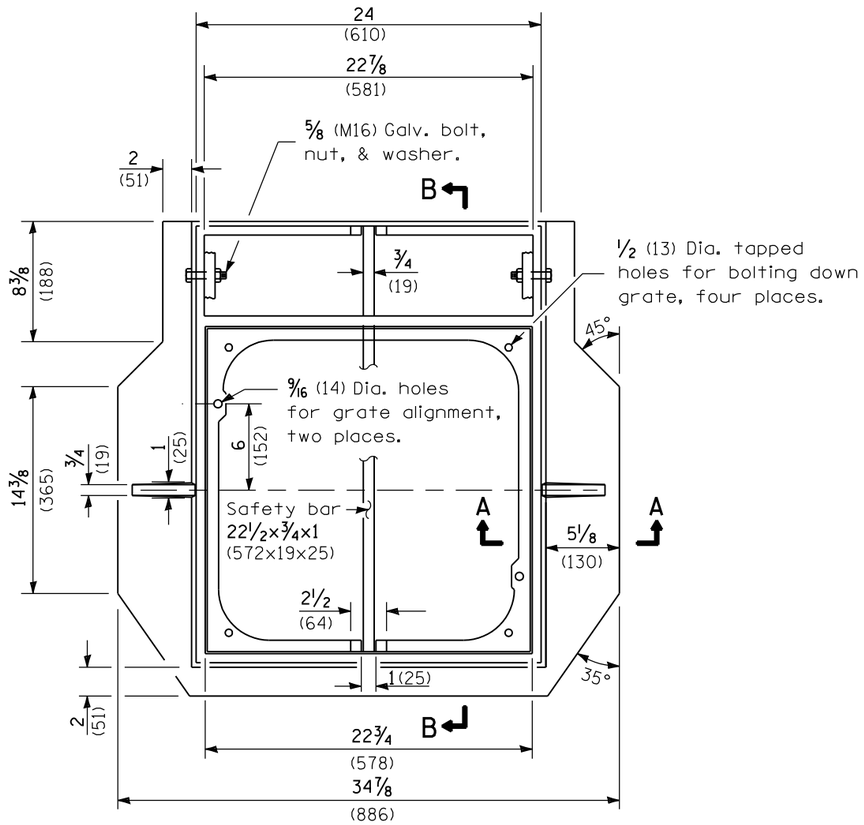

PLAN

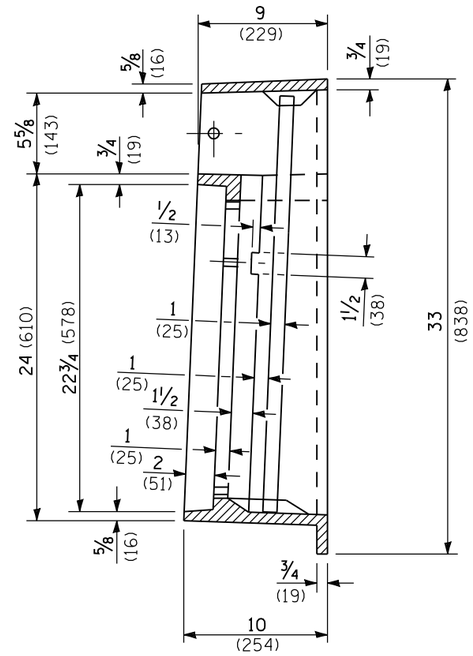

SECTION B-B

CAST FRAME

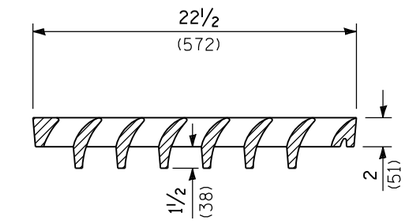

SECTION C-C

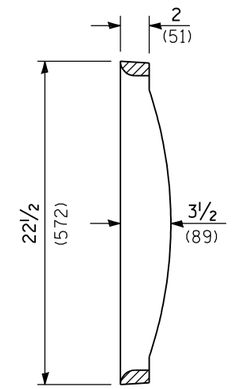

SECTION D-D

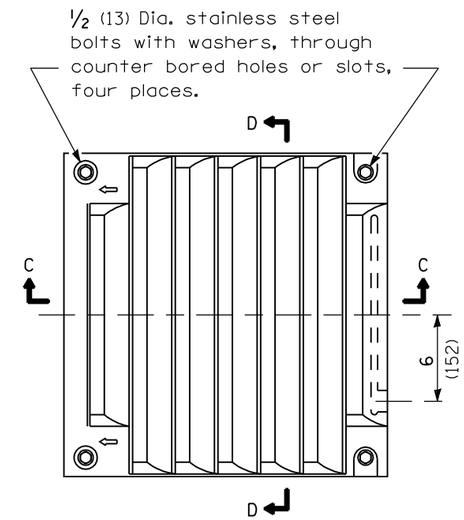

CAST GRATE

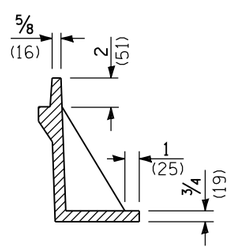

SECTION A-A

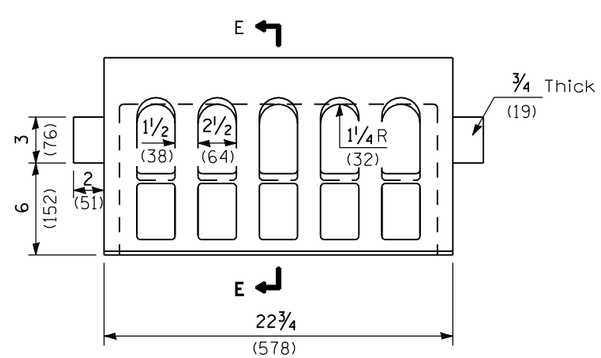

CURB BOX

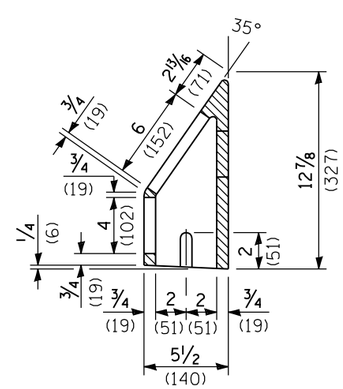

SECTION E-E

All dimensions are in inches (millimeters) unless otherwise shown.

Illinois Department of Transportation

PASSED January 1, 2009
ENGINEER OF POLICY AND PROCEDURES
APPROVED January 1, 2009
ENGINEER OF DESIGN AND ENVIRONMENT

ISSUED 1-1-97

DATE	REVISIONS
1-1-09	Switched units to English (metric).
1-1-07	Revised frame flanges, changed to a bolt down grate w/ deeper vanes.

FRAME AND GRATE TYPE 21

STANDARD 604076–04

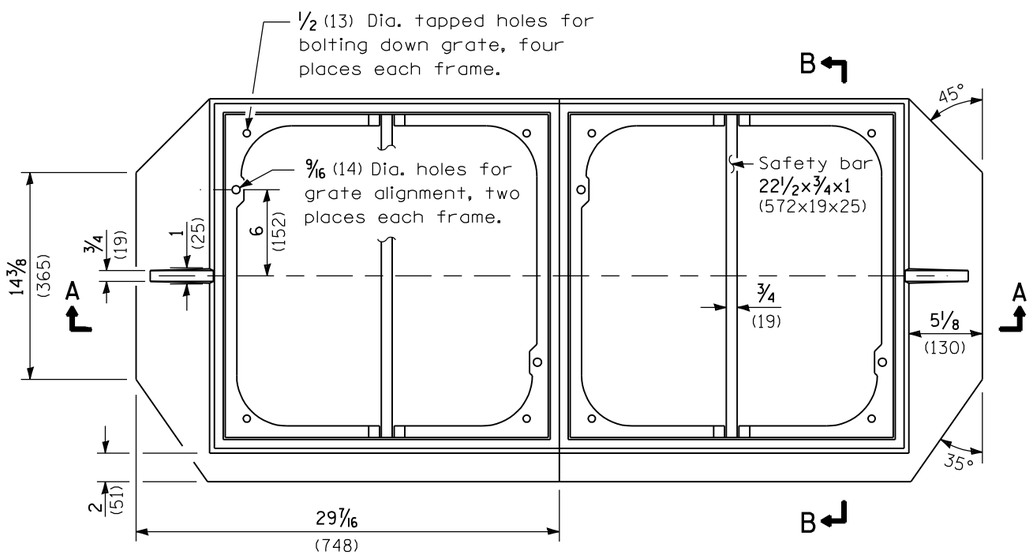

PLAN

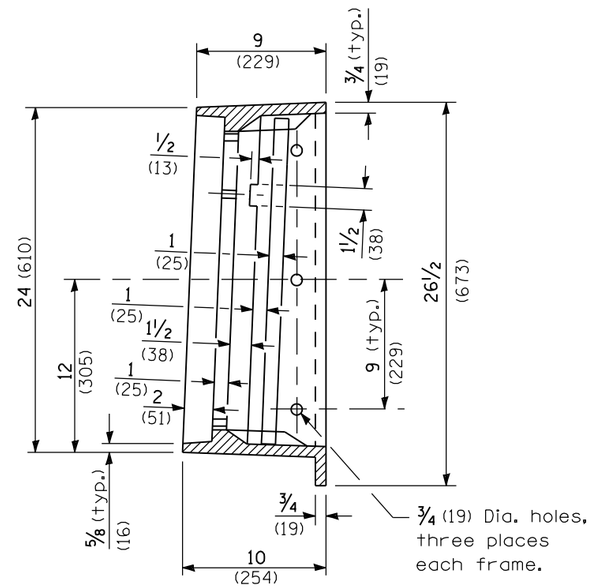

SECTION B-B

SECTION C-C

CAST FRAME

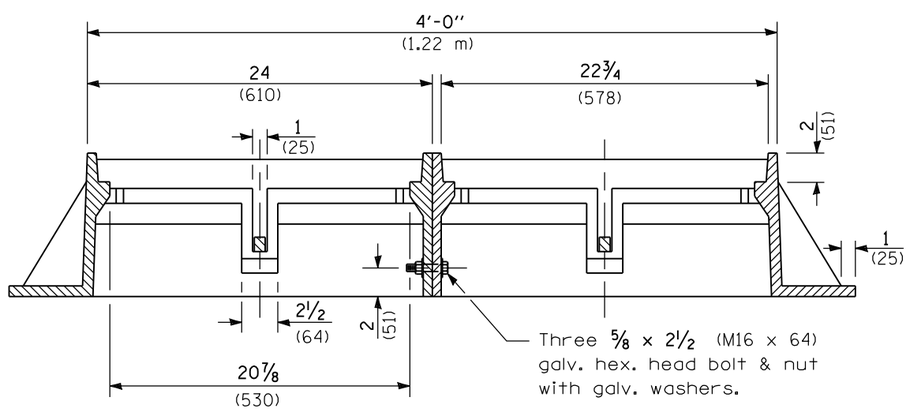

SECTION A-A

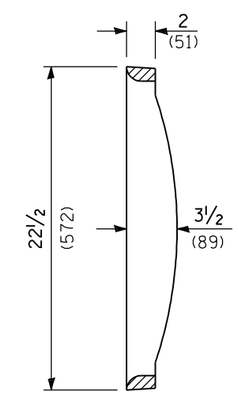

SECTION D-D

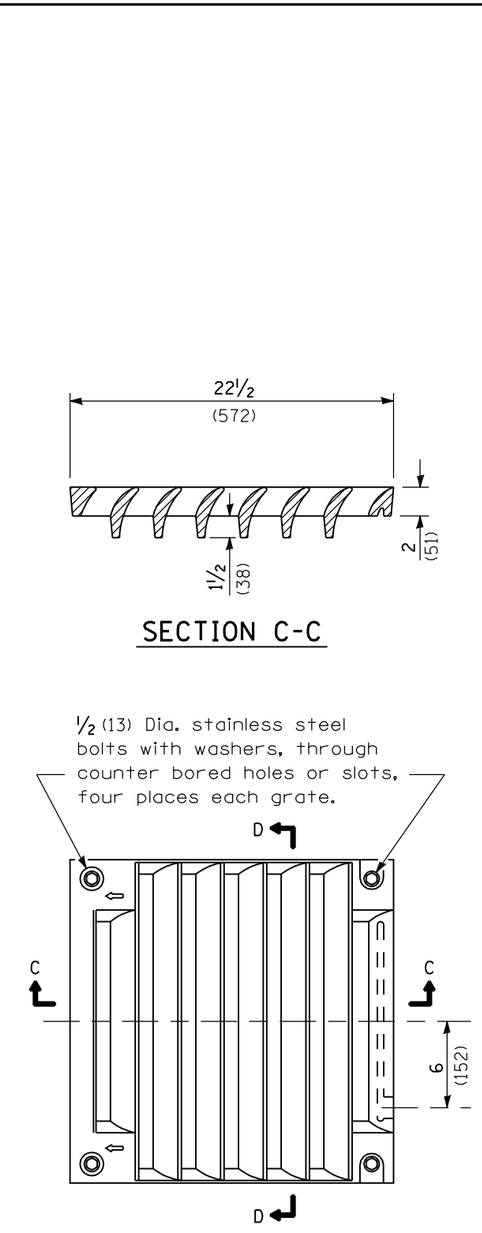

CAST GRATE

All dimensions are in inches (millimeters) unless otherwise shown.

Illinois Department of Transportation

PASSED January 1, 2009
ENGINEER OF POLICY AND PROCEDURES
APPROVED January 1, 2009
ENGINEER OF DESIGN AND ENVIRONMENT

ISSUED 1-1-97

DATE	REVISIONS
1-1-09	Switched units to English (metric).
1-1-07	Revised frame flanges, changed to a bolt down grate w/ deeper vanes.

FRAMES AND GRATES TYPE 22

STANDARD 604081-04

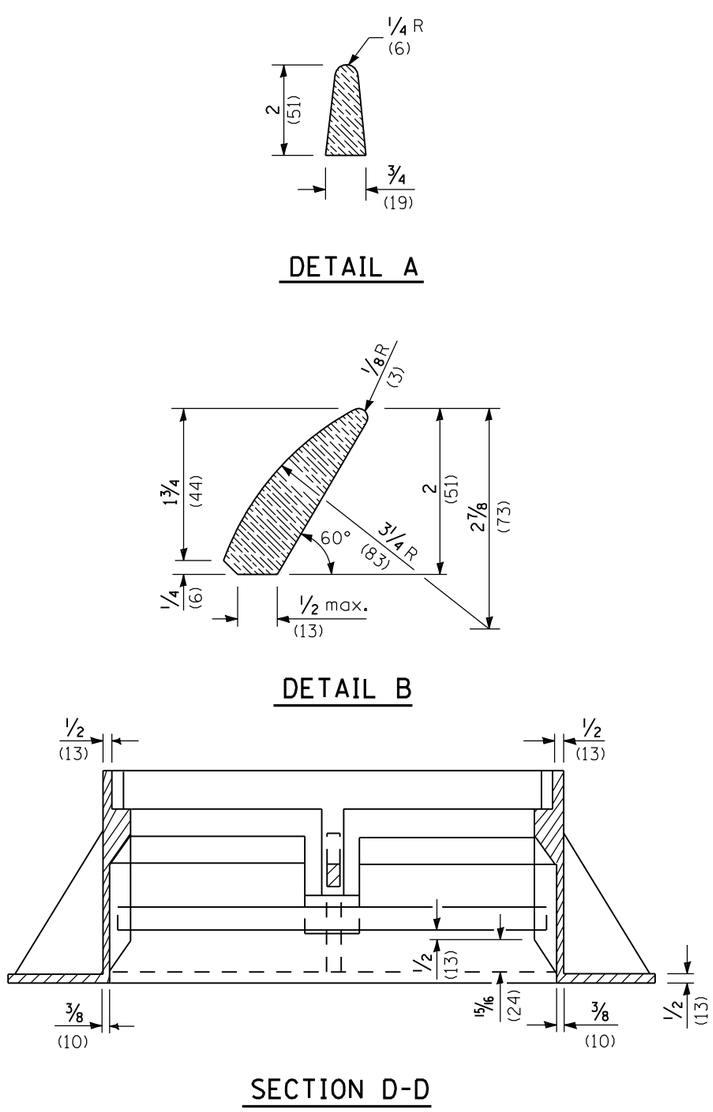

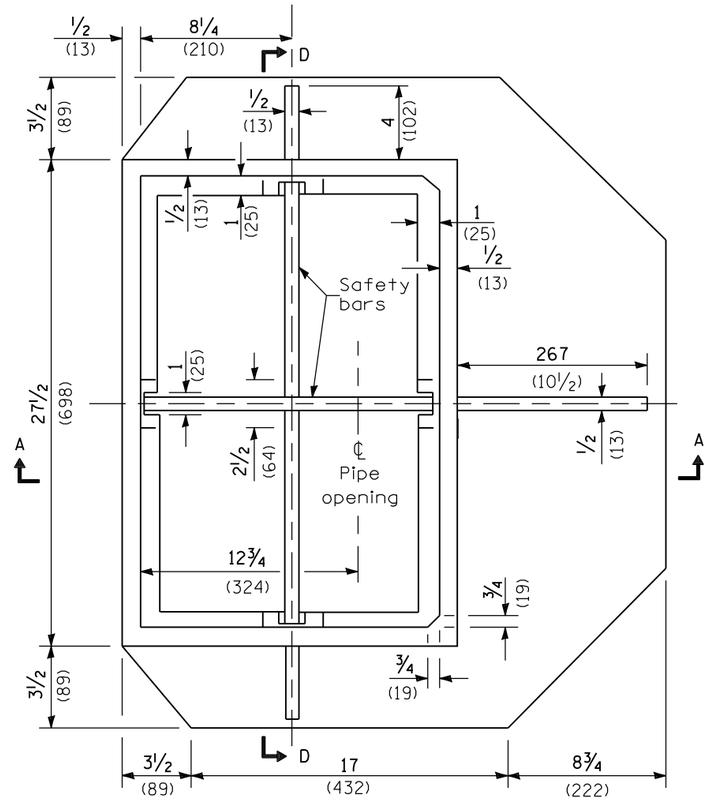

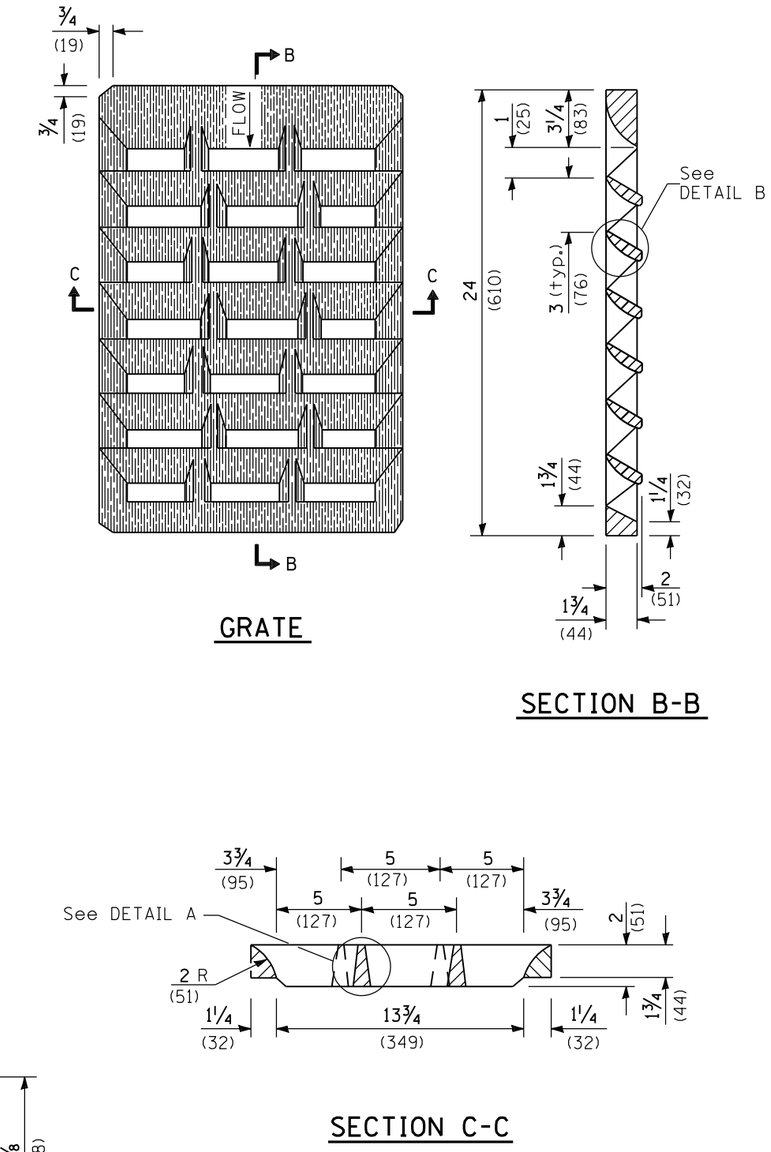

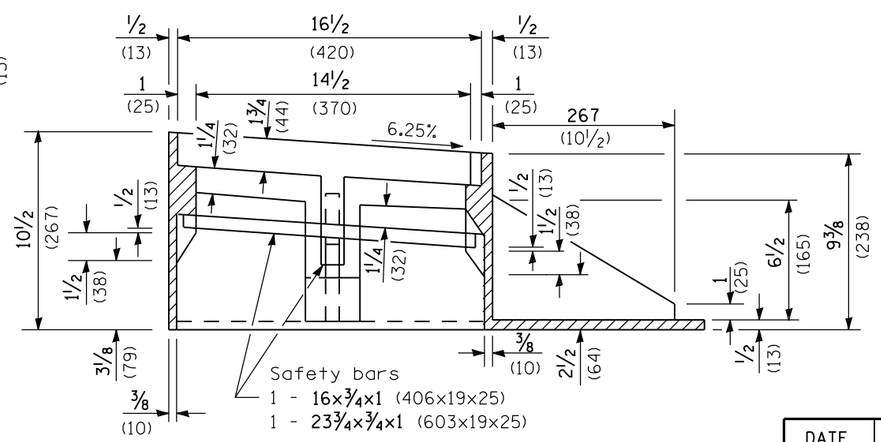

All dimensions are in inches (millimeters) unless otherwise shown.

Illinois Department of Transportation

PASSED January 1, 2009
ENGINEER OF POLICY AND PROCEDURES
APPROVED January 1, 2009
ENGINEER OF DESIGN AND ENVIRONMENT

ISSUED 1-1-97

DATE	REVISIONS
1-1-09	Switched units to English (metric).
1-1-04	Revised frame and removed weights.

FRAME AND GRATE TYPE 23

STANDARD 604086-02

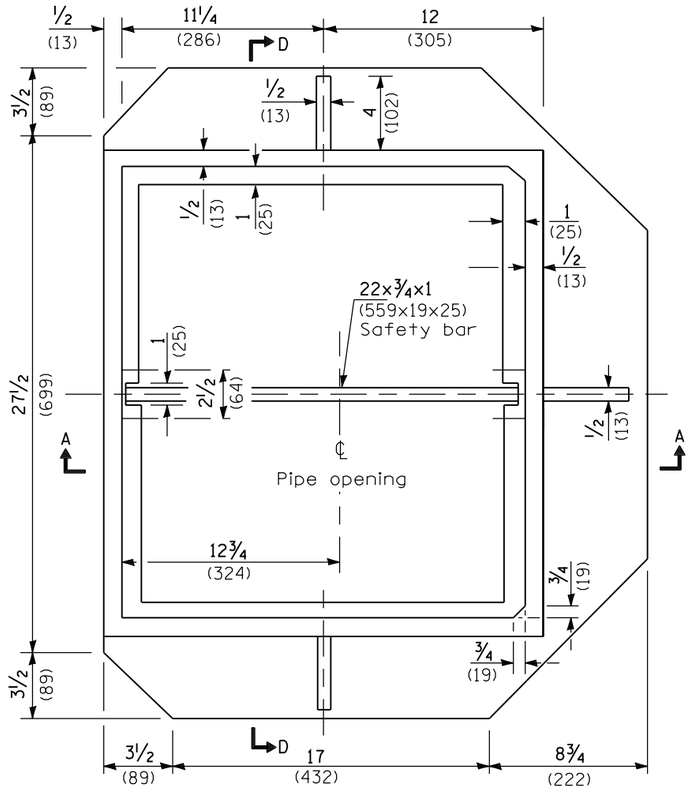

PLAN - FRAME

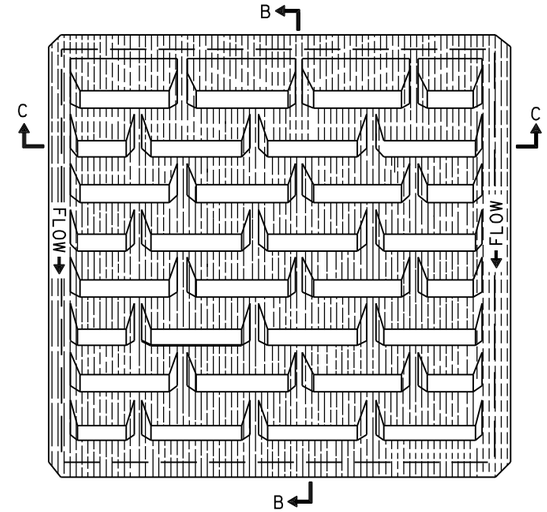

GRATE

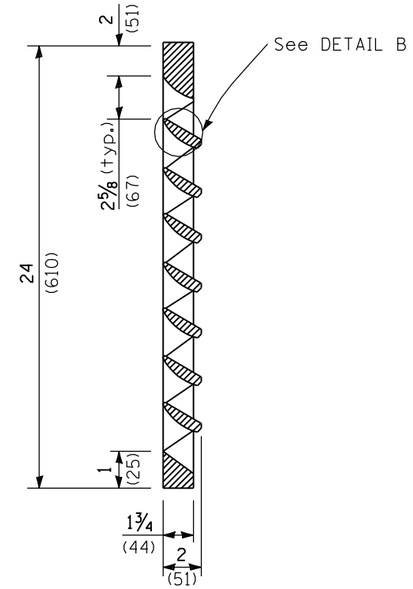

SECTION B-B

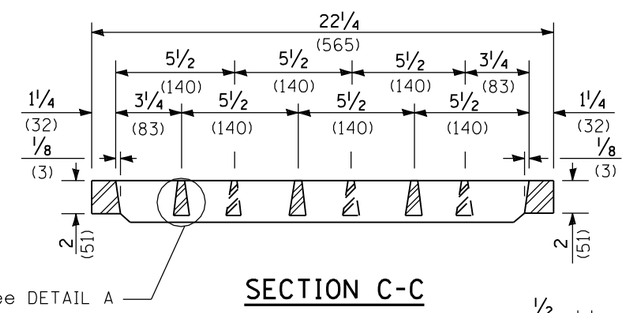

SECTION C-C

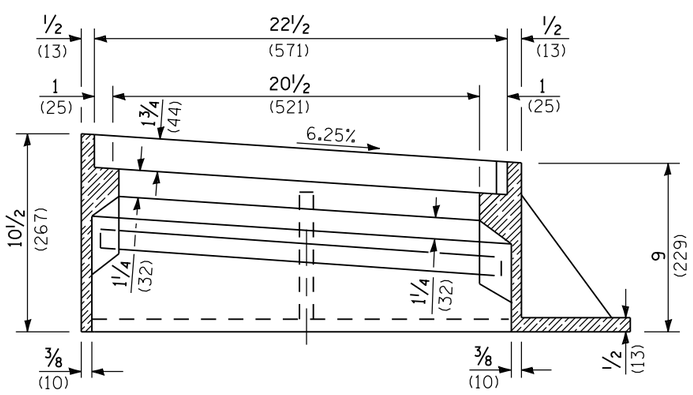

SECTION A-A

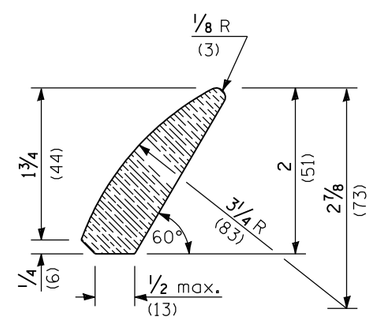

DETAIL B

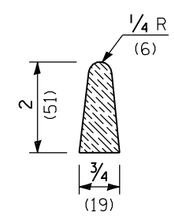

DETAIL A

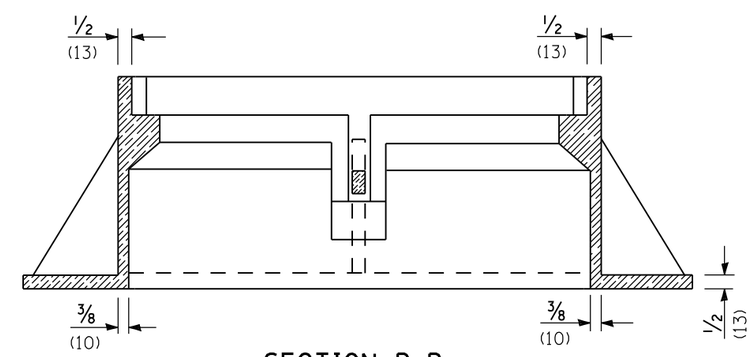

SECTION D-D

All dimensions are in inches (millimeters) unless otherwise shown.

Illinois Department of Transportation

PASSED January 1, 2009
ENGINEER OF POLICY AND PROCEDURES

APPROVED January 1, 2009
ENGINEER OF DESIGN AND ENVIRONMENT

ISSUED 1-1-97

DATE	REVISIONS
1-1-09	Switched units to English (metric).
1-1-04	Revised frame and removed weights.

FRAME AND GRATE TYPE 24

STANDARD 604091-02

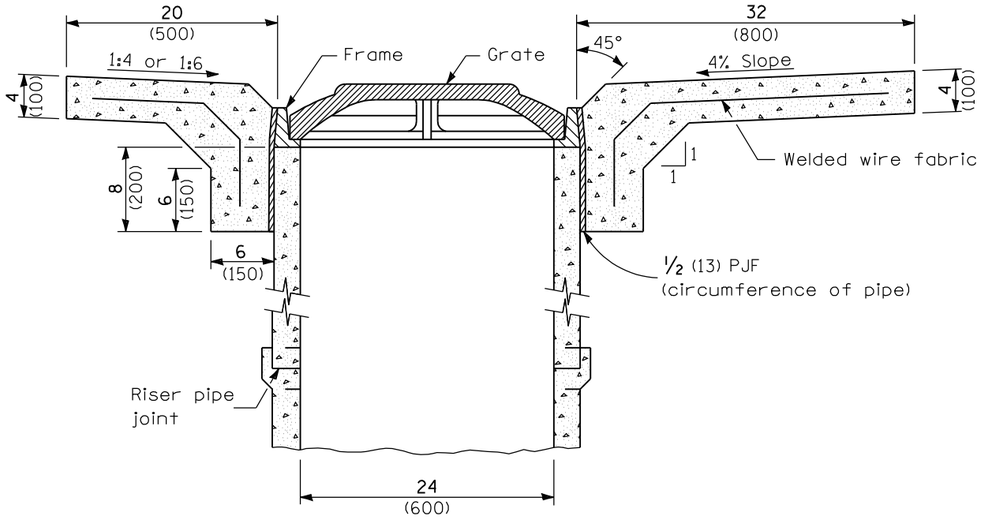

SECTION B-B

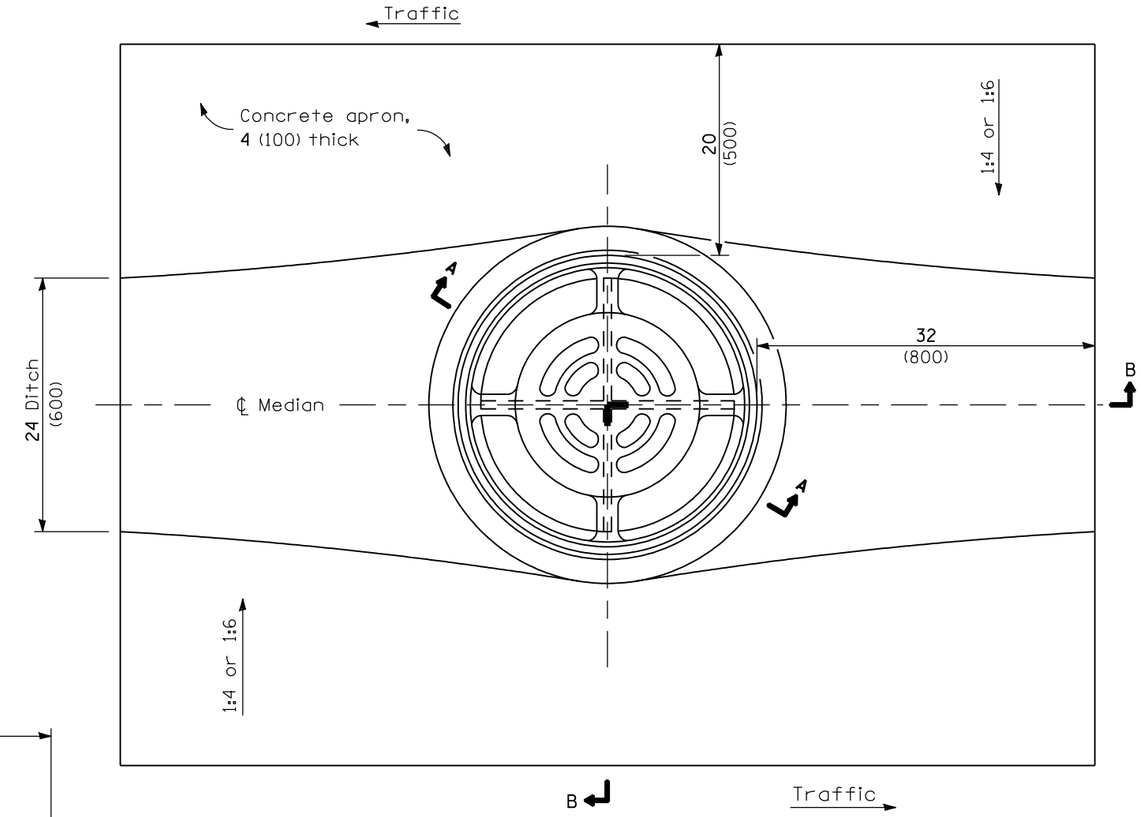

LOCATION SKETCH - PLAN

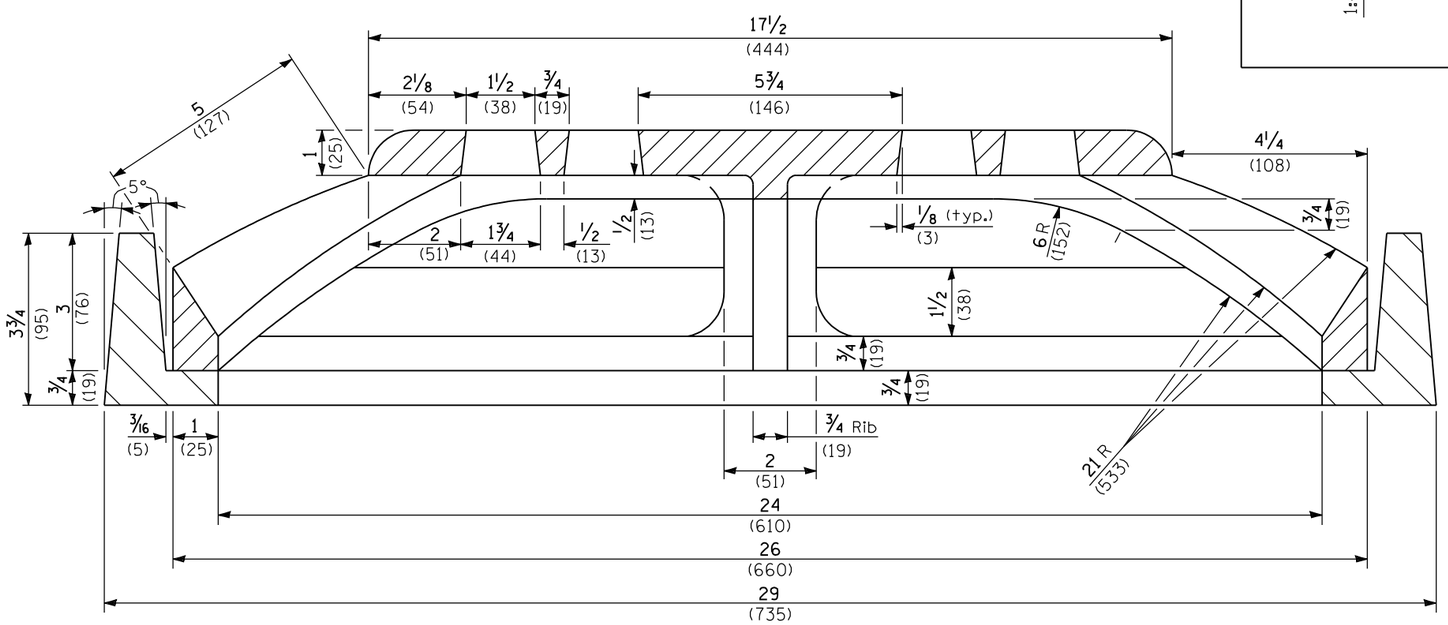

SECTION A-A

GENERAL NOTES

All slope ratios are expressed as units of vertical displacement to units of horizontal displacement (V:H).

All dimensions are in inches (millimeters) unless otherwise shown.

Illinois Department of Transportation

PASSED January 1, 2009
ENGINEER OF POLICY AND PROCEDURES

APPROVED January 1, 2009
ENGINEER OF DESIGN AND ENVIRONMENT

ISSUED 1-1-97

DATE	REVISIONS
1-1-09	Switched units to English (metric).
1-1-97	Renum. Standard 2250-3.

MEDIAN INLET for 24" (600 mm) REINFORCED CONCRETE PIPE

STANDARD 604101-01

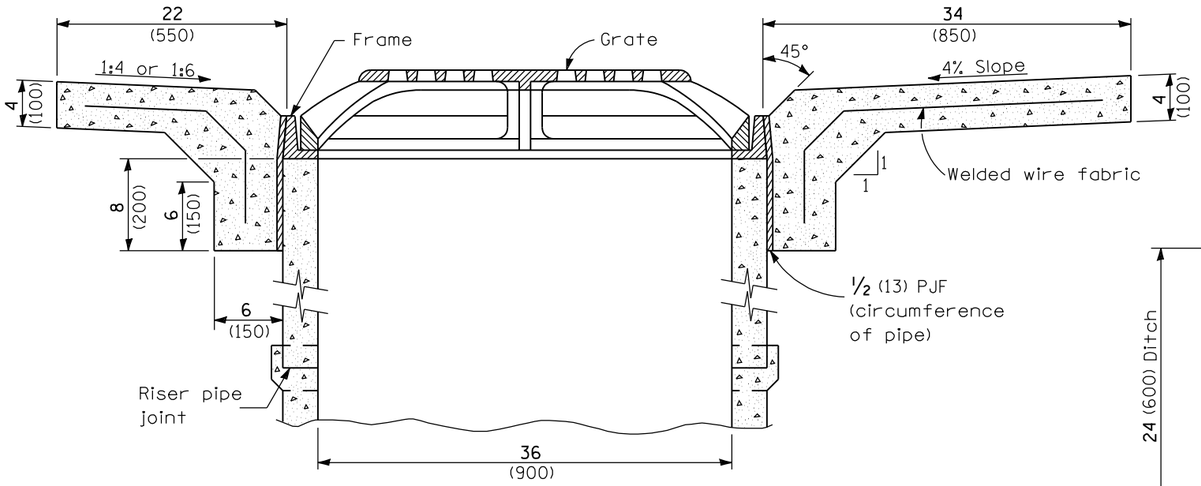

SECTION B-B

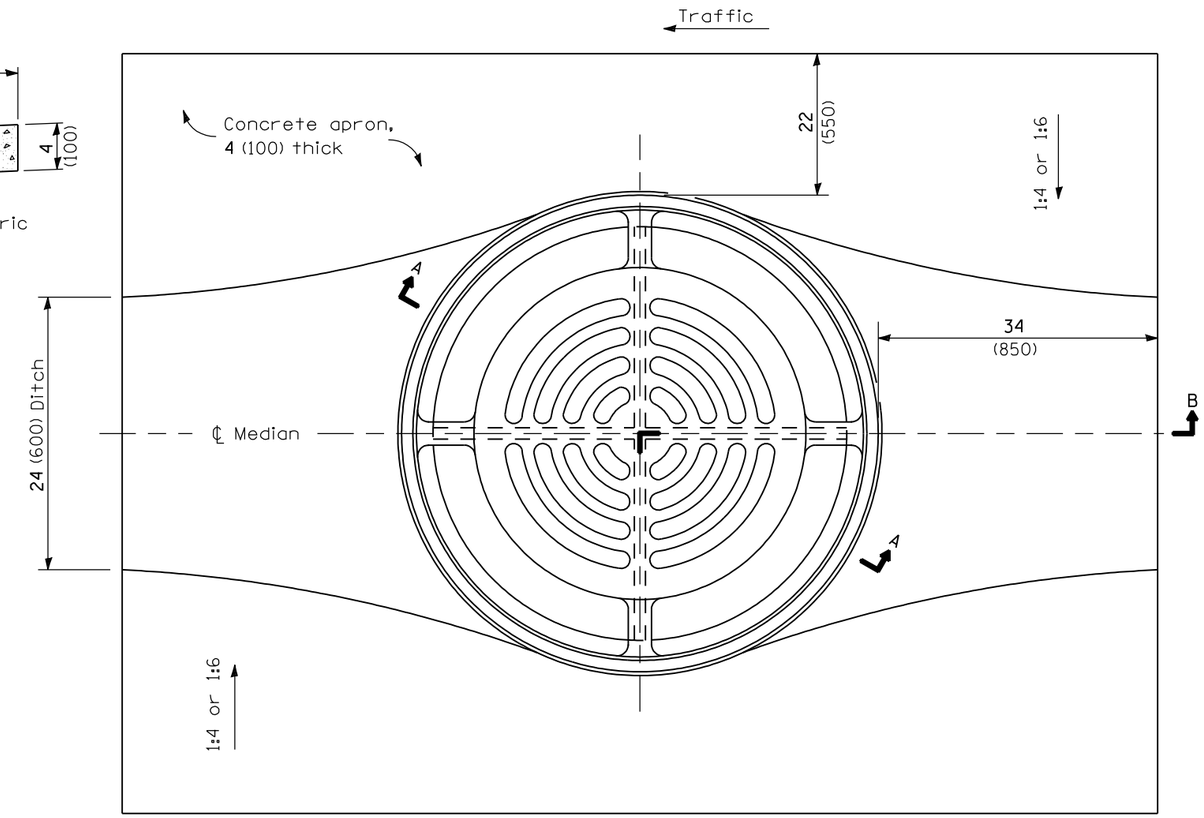

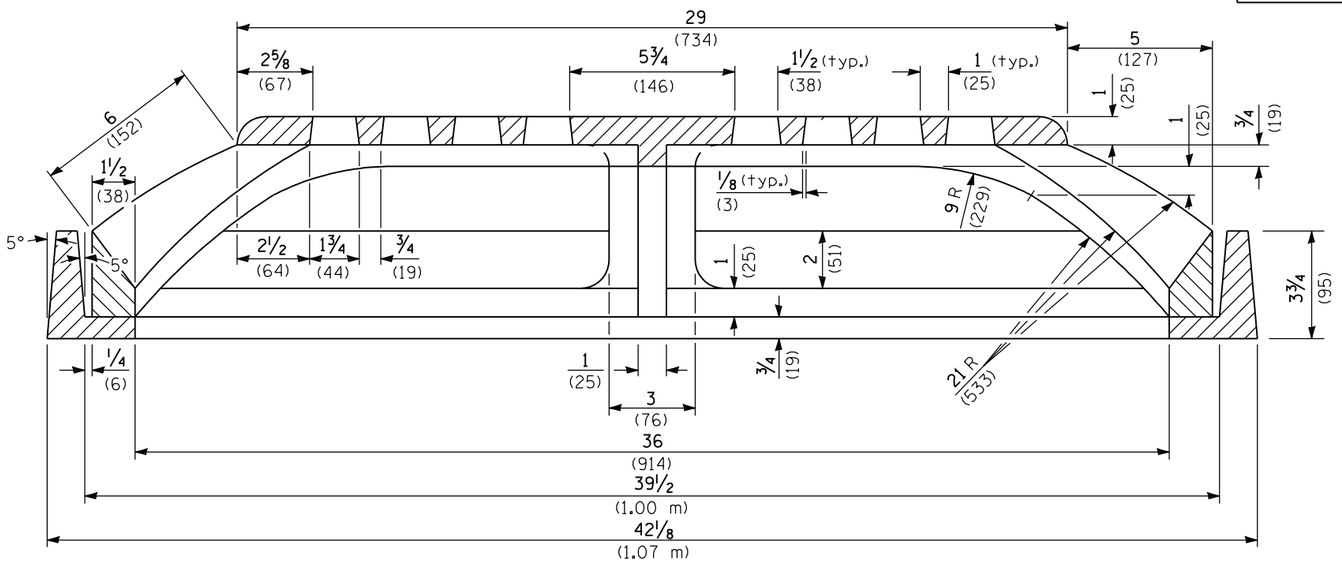

SECTION A-A

Traffic B

LOCATION SKETCH - PLAN

GENERAL NOTES

All slope ratios are expressed as units of vertical displacement to units of horizontal displacement (V:H).

All dimensions are in inches (millimeters) unless otherwise shown.

Illinois Department of Transportation

PASSED January 1, 2009
ENGINEER OF POLICY AND PROCEDURES

APPROVED January 1, 2009
ENGINEER OF DESIGN AND ENVIRONMENT

ISSUED 1-1-97

DATE	REVISIONS
1-1-09	Switched units to English (metric).
1-1-97	Renum. Standard 2251-2.

MEDIAN INLET for 36" (900 mm) REINFORCED CONCRETE PIPE

STANDARD 604106-01

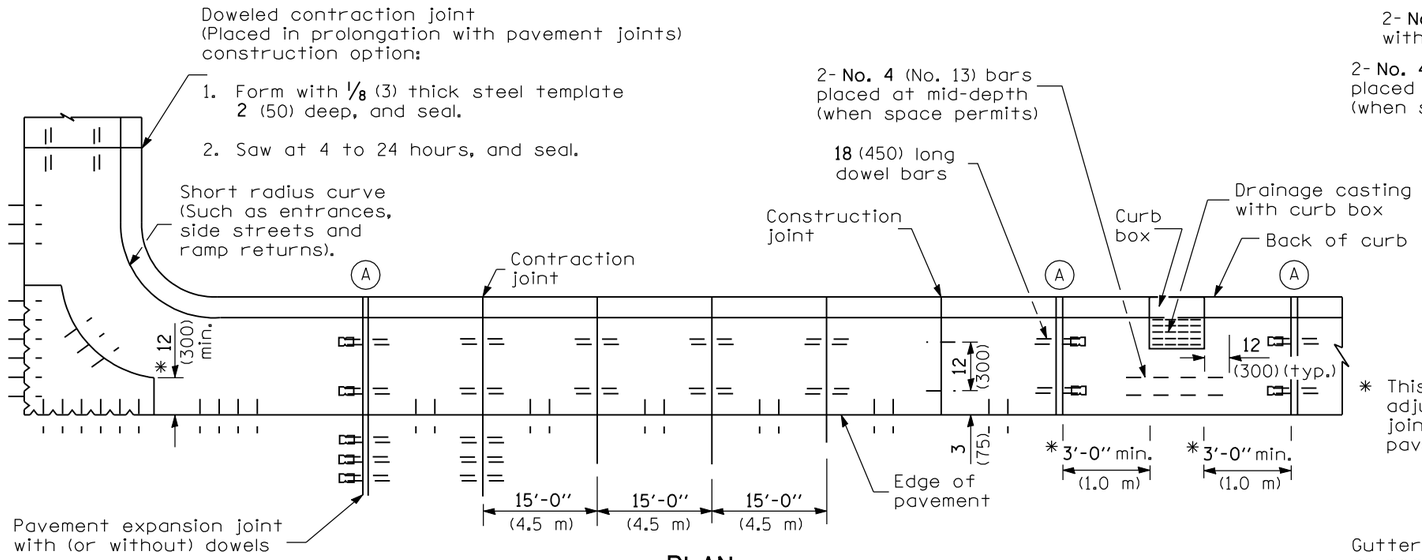

* This dimension shall be adjusted to align with joint on the adjacent pavement

PLAN

ADJACENT TO PCC PAVEMENT OR PCC BASE COURSE

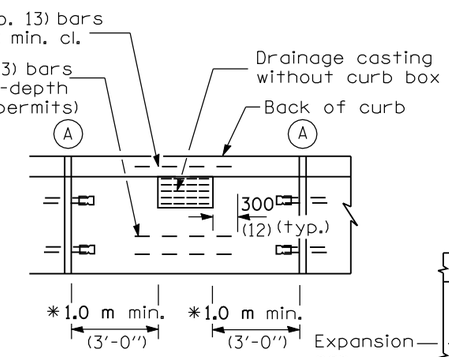

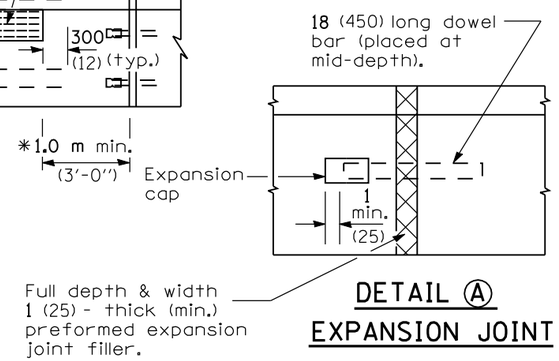

DETAIL Ⓐ
EXPANSION JOINT

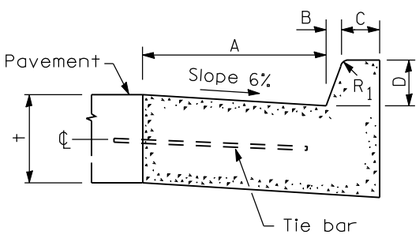

BARRIER CURB

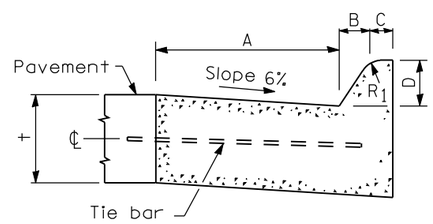

MOUNTABLE CURB

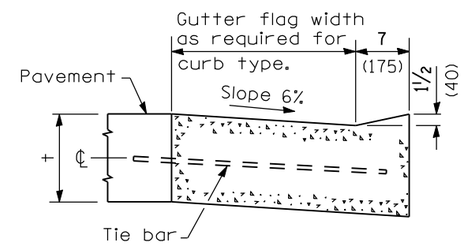

DEPRESSED CURB (TYPICAL)

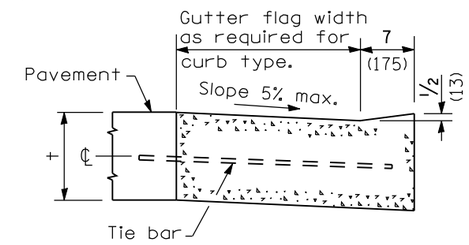

DEPRESSED CURB ADJACENT TO CURB RAMP ACCESSIBLE TO THE DISABLED

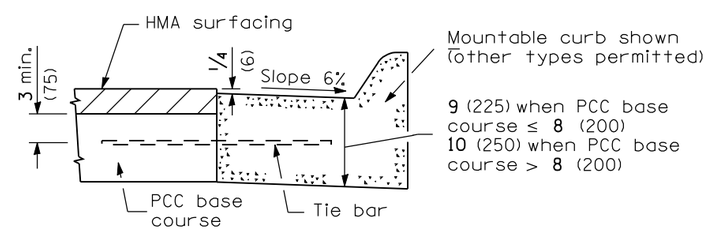

ADJACENT TO PCC BASE COURSE WITH HMA SURFACING

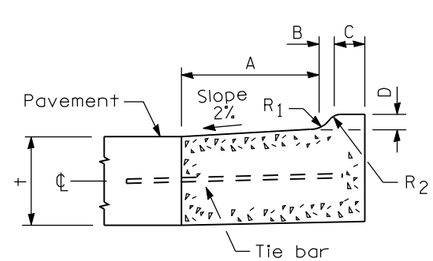

M-2.06 (M-5.15) and M-2.12 (M-5.30)

GENERAL NOTES

The bottom slope of combination curb and gutter constructed adjacent to pcc pavement shall be the same slope as the subbase or 6% when subbase is omitted.

t = Thickness of pavement.

Longitudinal joint tie bars shall be No. 6 (No. 19) at 24 (600) centers in accordance with details for longitudinal construction joint shown on Standard 420001.

A minimum clearance of 2 (50) between the end of the tie bar and the back of the curb shall be maintained.

All dimensions are in inches (millimeters) unless otherwise shown.

TABLE OF DIMENSIONS
BARRIER CURB

TYPE	A	B	C	D	R_1
B-6.12 (B-15.3)	12 (300)	1 (25)	6 (150)	6 (150)	1 (25)
B-6.18 (B-15.45)	18 (450)	1 (25)	6 (150)	6 (150)	1 (25)
B-6.24 (B-15.60)	24 (600)	1 (25)	6 (150)	6 (150)	1 (25)
B-9.12 (B-22.30)	12 (300)	2 (50)	5 (125)	9 (225)	1 (25)
B-9.18 (B-22.45)	18 (450)	2 (50)	5 (125)	9 (225)	1 (25)
B-9.24 (B-22.60)	24 (600)	2 (50)	5 (125)	9 (225)	1 (25)

TABLE OF DIMENSIONS
MOUNTABLE CURB

TYPE	A	B	C	D	R_1	R_2
M-2.06 (M-5.15)	6 (150)	2 (50)	4 (100)	2 (50)	3 (75)	2 (50)
M-2.12 (M-5.30)	12 (300)	2 (50)	4 (100)	2 (50)	3 (75)	2 (50)
M-4.06 (M-10.15)	6 (150)	4 (100)	3 (75)	4 (100)	3 (75)	NA
M-4.12 (M-10.30)	12 (300)	4 (100)	3 (75)	4 (100)	3 (75)	NA
M-4.18 (M-10.45)	18 (450)	4 (100)	3 (75)	4 (100)	3 (75)	NA
M-4.24 (M-10.60)	24 (600)	4 (100)	3 (75)	4 (100)	3 (75)	NA
M-6.06 (M-15.15)	6 (150)	6 (150)	2 (50)	6 (150)	2 (50)	NA
M-6.12 (M-15.30)	12 (300)	6 (150)	2 (50)	6 (150)	2 (50)	NA
M-6.18 (M-15.45)	18 (450)	6 (150)	2 (50)	6 (150)	2 (50)	NA
M-6.24 (M-15.60)	24 (600)	6 (150)	2 (50)	6 (150)	2 (50)	NA

Illinois Department of Transportation

PASSED January 1, 2009
ENGINEER OF POLICY AND PROCEDURES

APPROVED January 1, 2009
ENGINEER OF DESIGN AND ENVIRONMENT

ISSUED 1-1-97

DATE	REVISIONS
1-1-09	Switched units to English (metric).
1-1-07	Switched to Hot-Mix Asphalt (HMA) terminology.

CONCRETE CURB TYPE B AND COMBINATION CONCRETE CURB AND GUTTER

(Sheet 1 of 2)

STANDARD 606001-04

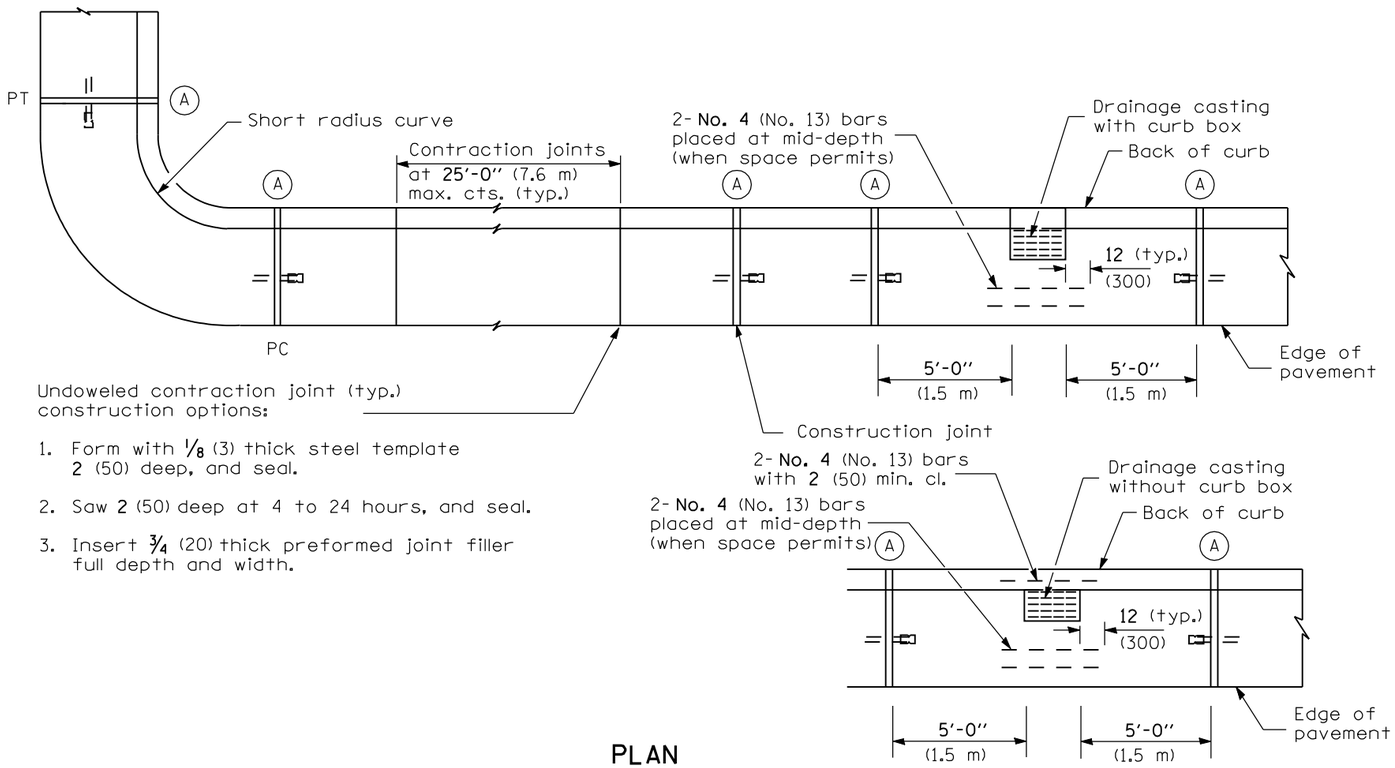

PLAN

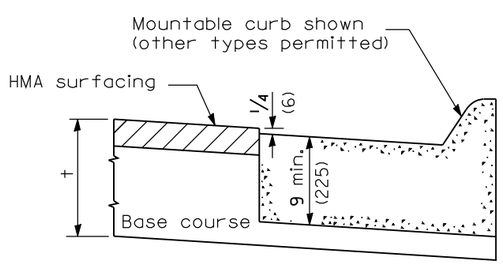

ON DISTURBED SUBGRADE

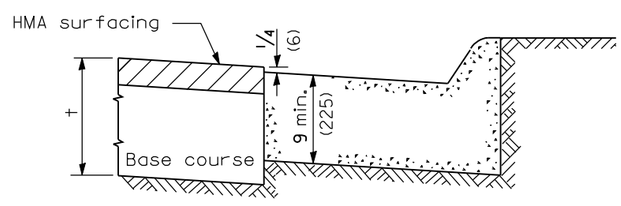

ON UNDISTURBED SUBGRADE

ADJACENT TO FLEXIBLE PAVEMENT

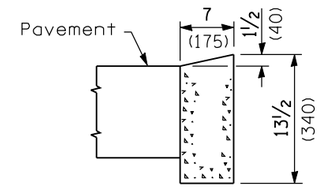

DEPRESSED CURB

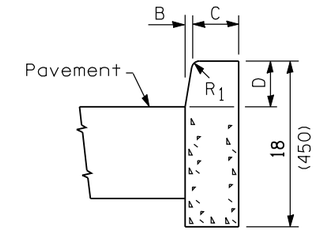

BARRIER CURB

ADJACENT TO FLEXIBLE PAVEMENT

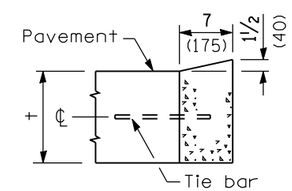

DEPRESSED CURB

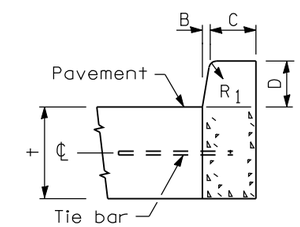

BARRIER CURB

ADJACENT TO PCC PAVEMENT OR PCC BASE COURSE

CONCRETE CURB TYPE B

Illinois Department of Transportation

PASSED January 1, 2009
ENGINEER OF POLICY AND PROCEDURES

APPROVED January 1, 2009
ENGINEER OF DESIGN AND ENVIRONMENT

ISSUED 1-1-97

CONCRETE CURB TYPE B
AND COMBINATION
CONCRETE CURB AND GUTTER
(Sheet 2 of 2)

STANDARD 606001-04

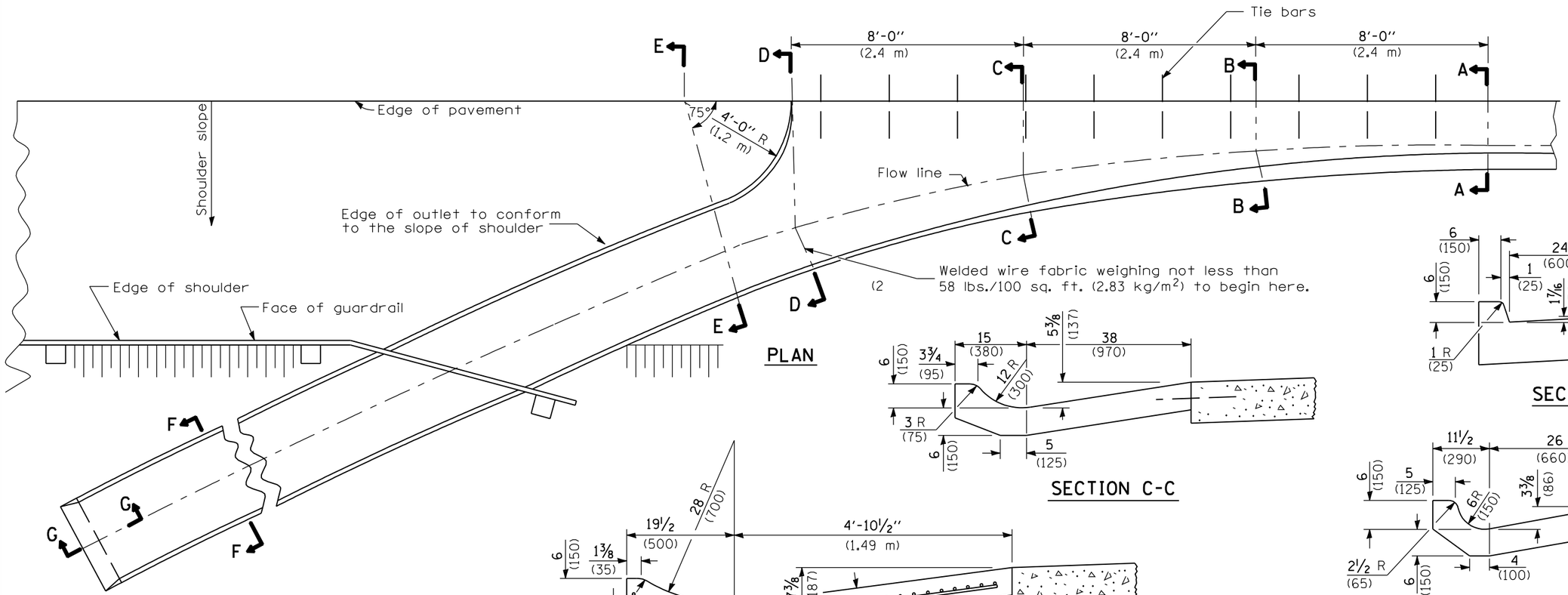

PLAN

SECTION C-C

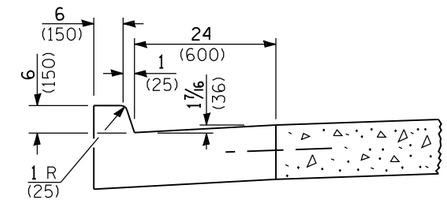

SECTION A-A

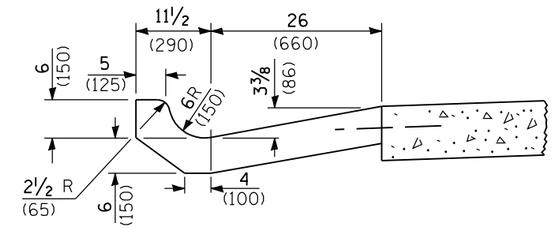

SECTION B-B

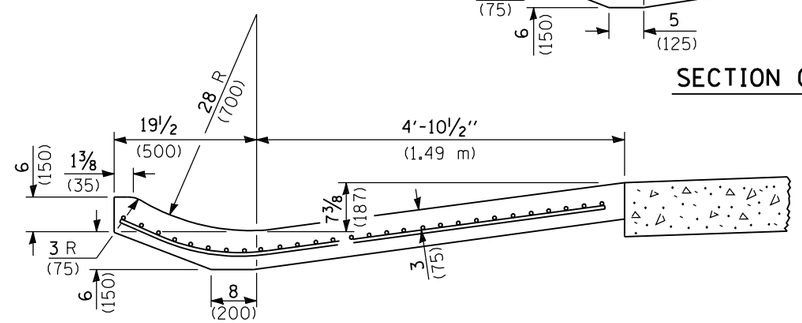

SECTION D-D

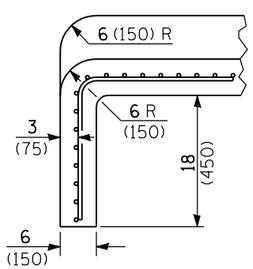

SECTION G-G

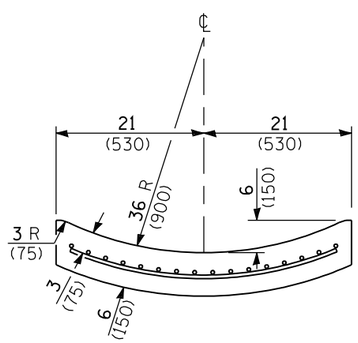

SECTION F-F

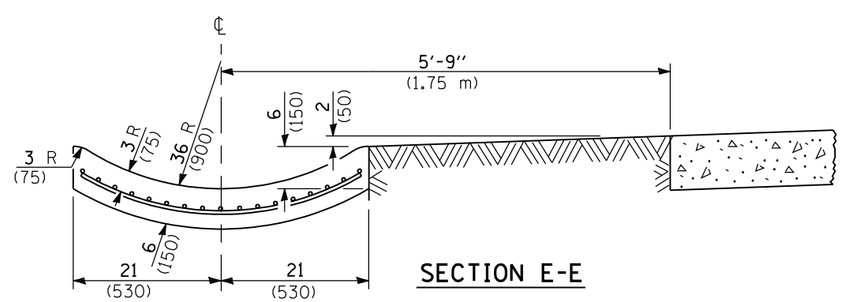

SECTION E-E

GENERAL NOTES

Tie bars shall be No. 6 (No. 19) at 24 (600) centers unless otherwise shown.

Gutter outlet shall be tied to the pavement in accordance with details for longitudinal construction joint shown on Standard 420001.

If the average grade of pavement for the distance from Section A-A to D-D exceeds 2%, this distance shall be increased 6' (1.8 m) for each 1% increase in grade.

All dimensions are in inches (millimeters) unless otherwise shown.

QUANTITIES

For Section A-A to E-E and curtain wall =

2.38 cu. yds. (1.82 m³) concrete for 9 (225) pav't.
2.41 cu. yds. (1.84 m³) concrete for 10 (250) pav't.

For Section F-F =

0.069 cu. yds. (0.17 m³) concrete per ft. (m)

STANDARD OUTLET

Illinois Department of Transportation

PASSED January 1, 2009
ENGINEER OF POLICY AND PROCEDURES
APPROVED January 1, 2009
ENGINEER OF DESIGN AND ENVIRONMENT

ISSUED 1-1-97

DATE	REVISIONS
1-1-09	Switched units to English (metric).
1-1-07	Soft converted metric rebars. Rem. weights of grates and cover.

OUTLETS FOR CONC. CURB AND GUTTER TYPE B-6.24 (B-15.60)

(Sheet 1 of 2)

STANDARD 606006-02

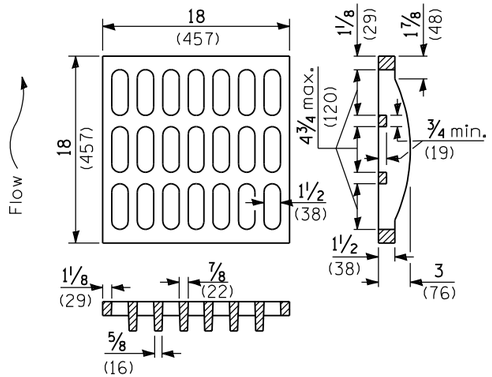

GRATE TYPE A

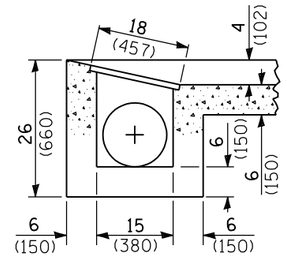

SECTION E-E

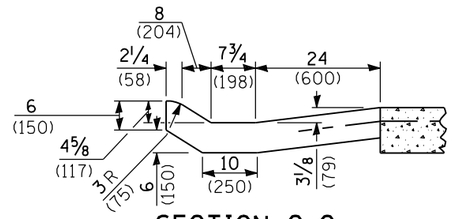

SECTION C-C

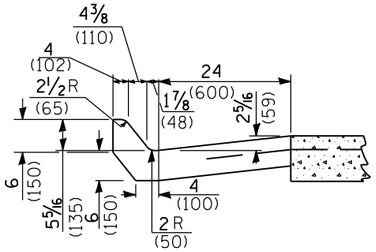

SECTION B-B

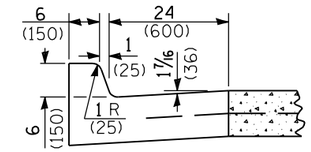

SECTION A-A

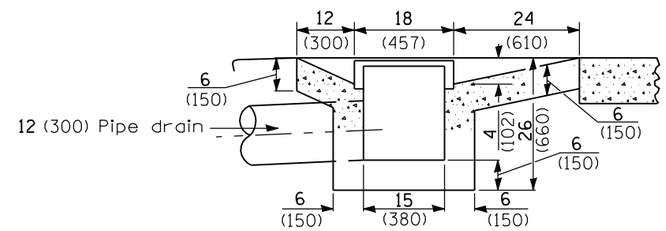

SECTION D-D

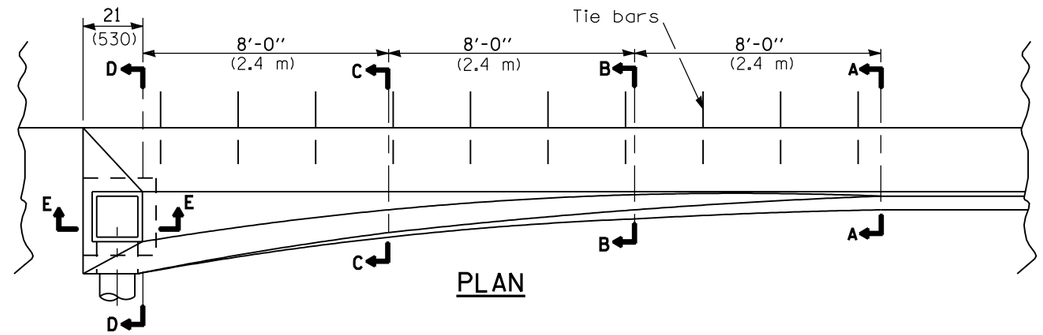

PLAN

QUANTITIES

1.98 cu. yds. (1.51 m^3) concrete for 9 (225) pav't.

2.01 cu. yds. (1.54 m^3) concrete for 10 (250) pav't.

TYPE 1 OUTLET

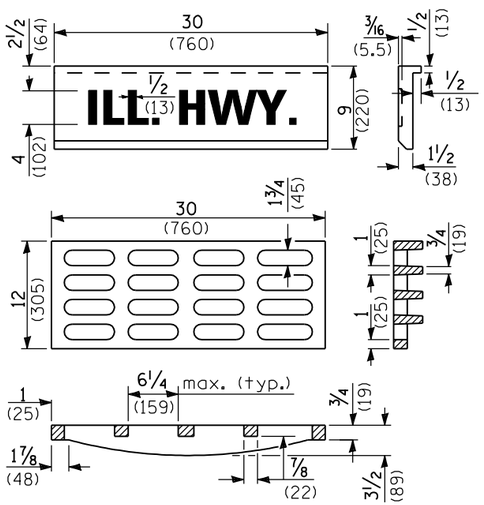

GRATE AND COVER TYPE 2B

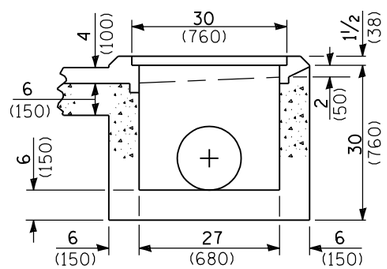

SECTION F-F

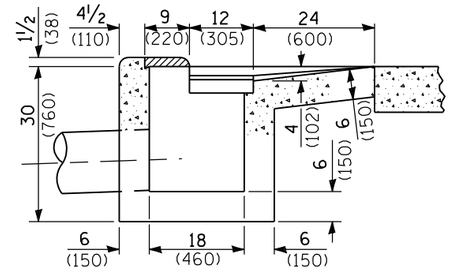

SECTION D-D

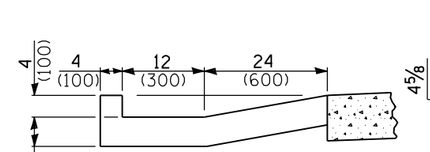

SECTION E-E

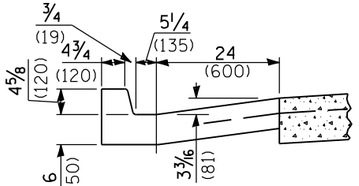

SECTION C-C

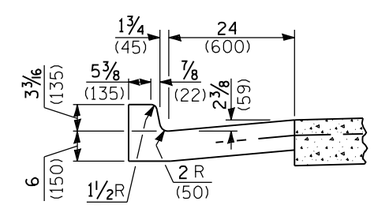

SECTION B-B

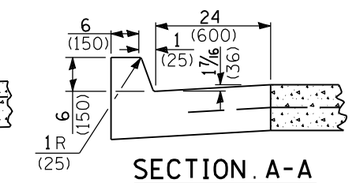

SECTION A-A

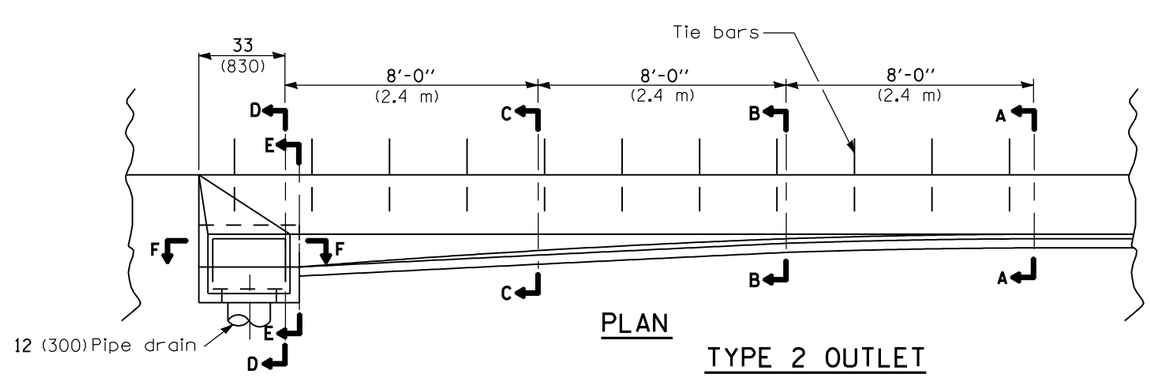

PLAN

TYPE 2 OUTLET

QUANTITIES

2.07 cu. yds. (1.58 m^3) concrete for 9 (225) pav't.

2.07 cu. yds. (1.60 m^3) concrete for 10 (250) pav't.

All dimensions are in inches (millimeters) unless otherwise shown.

Illinois Department of Transportation

PASSED January 1, 2009
ENGINEER OF POLICY AND PROCEDURES

APPROVED January 1, 2009
ENGINEER OF DESIGN AND ENVIRONMENT

ISSUED 1-1-97

OUTLETS FOR CONC. CURB AND GUTTER TYPE B-6.24 (B-15.60)

(Sheet 2 of 2)

STANDARD 606006–02

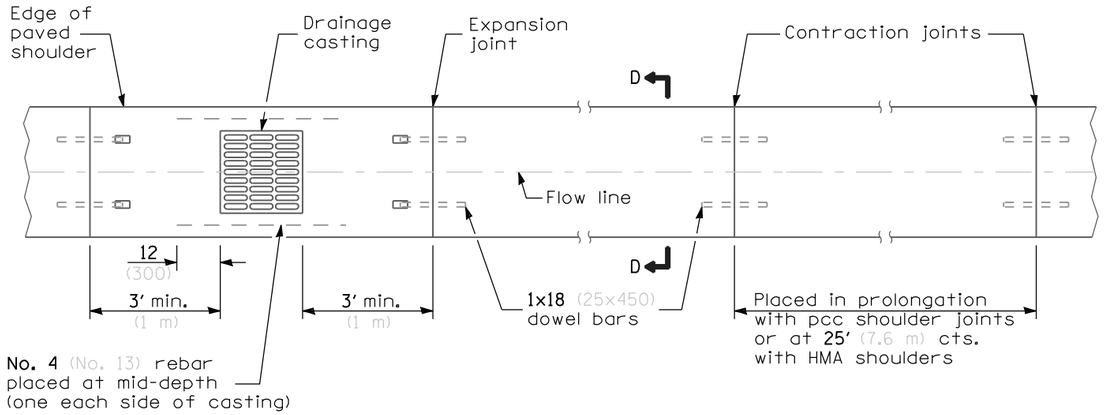

PLAN

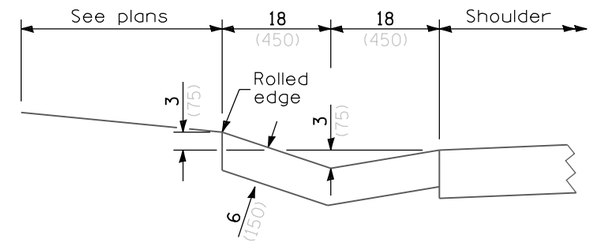

SECTION D-D

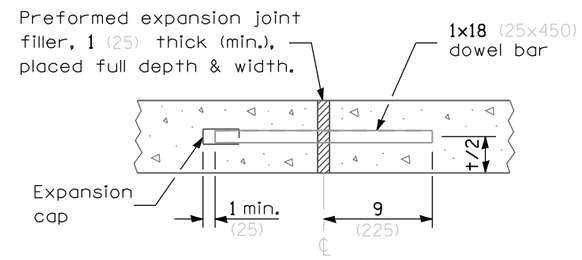

EXPANSION JOINT

TYPE A GUTTER

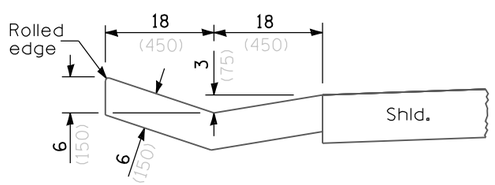

SECTION A-A

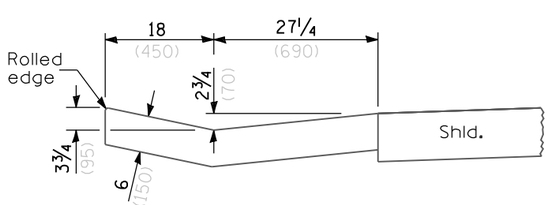

SECTION B-B

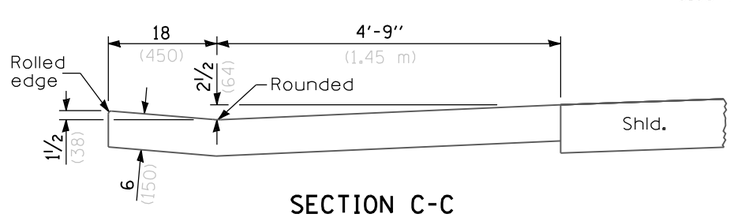

SECTION C-C

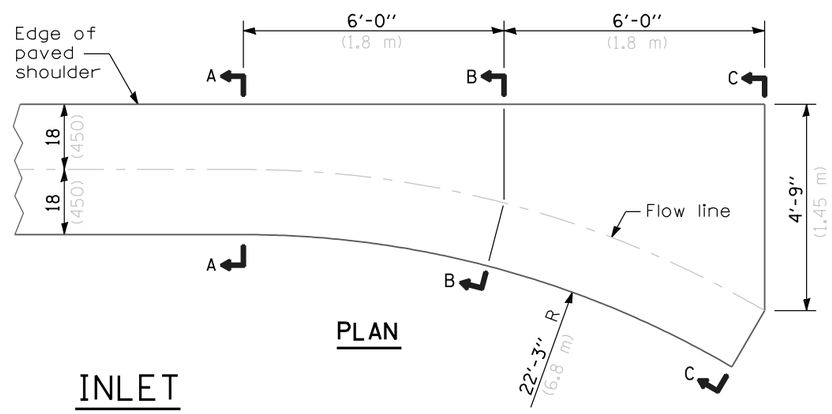

PLAN

INLET

QUANTITY OF CONCRETE
Section A-A to C-C
0.93 cu. yd. (0.71 m^3)

All dimensions are in inches (millimeters) unless otherwise shown.

Illinois Department of Transportation

PASSED January 1, 2009
ENGINEER OF POLICY AND PROCEDURES
APPROVED January 1, 2009
ENGINEER OF DESIGN AND ENVIRONMENT

ISSUED 1-1-97

DATE	REVISIONS
1-1-09	Switched units to
	English (metric). Changed
	radii, adjusted qty's.
1-1-08	Changed B'-B' to B-B
	in quantities under plan.

TYPE A GUTTER
(INLET, OUTLET & ENTRANCE)

(Sheet 1 of 3)

STANDARD 606101-04

QUANTITIES OF CONCRETE

Commercial Entrances:
Section B-B to C-C = **0.25 cu. yd./ft.** (0.62 m^3/m).
Section (A-A to B-B) + (C-C to D-D) = **2.26 cu. yd.** (1.73 m^3).

All Other Entrances:
Section B-B to C-C = **0.20 cu. yd./ft.** (0.50 m^3/m).
Section (A-A to B-B) + (C-C to D-D) = **1.79 cu. yd.** (1.37 m^3).

NOTE
Welded wire fabric shall be installed at mid-depth from Section A-A to D-D. (58 lbs./100 sq. ft. (2.83 kg/m^2))

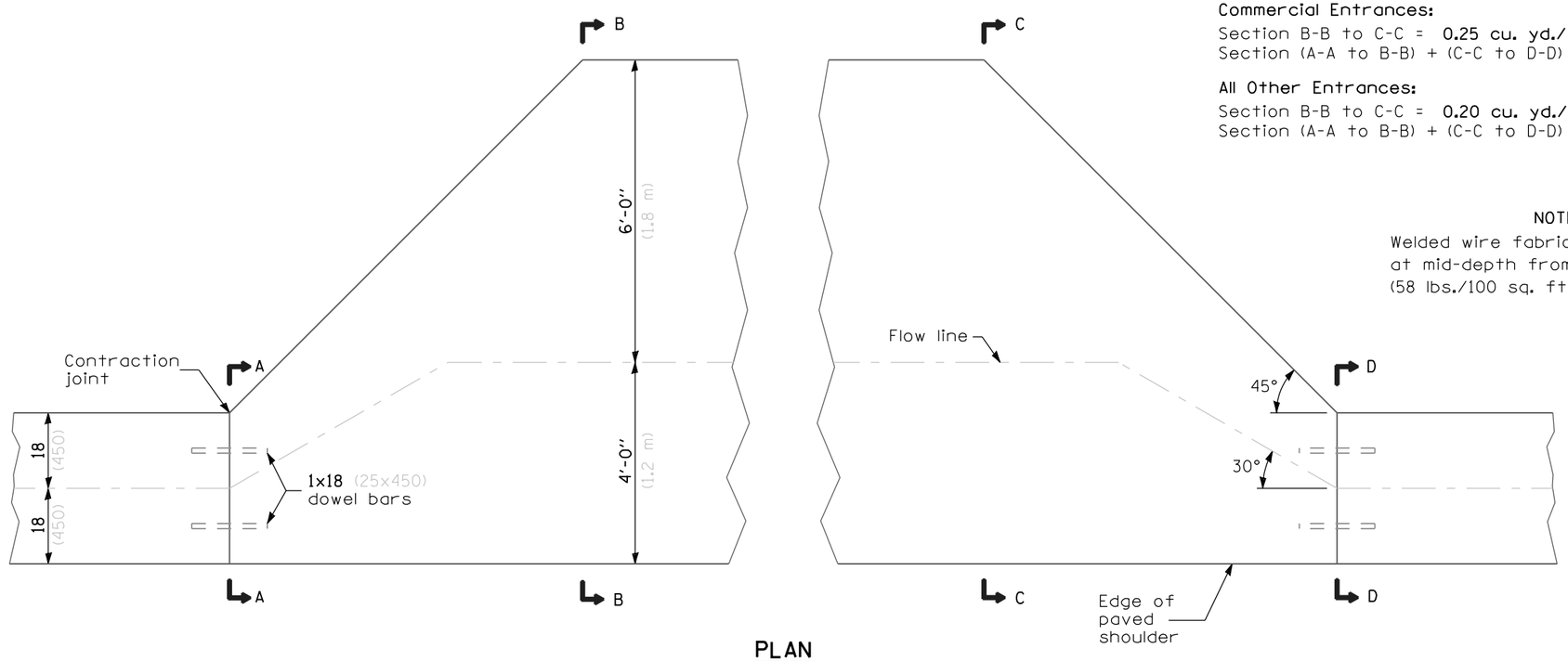

PLAN

ENTRANCE

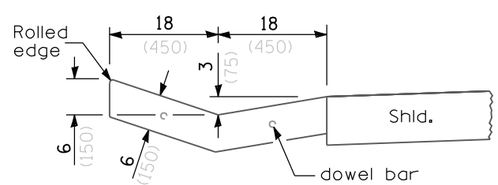

SECTIONS A-A & D-D

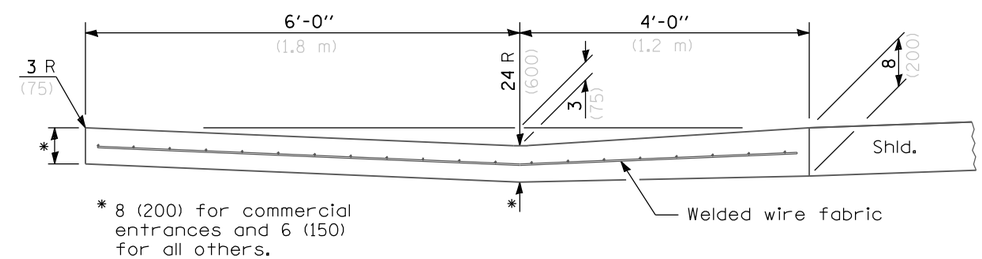

SECTIONS B-B & C-C

Illinois Department of Transportation

PASSED January 1, 2009
ENGINEER OF POLICY AND PROCEDURES
APPROVED January 1, 2009
ENGINEER OF DESIGN AND ENVIRONMENT

ISSUED 1-1-97

TYPE A GUTTER
(INLET, OUTLET & ENTRANCE)

(Sheet 2 of 3)

STANDARD 606101-04

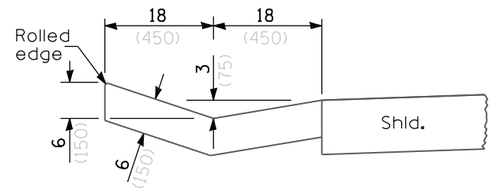

SECTION A-A

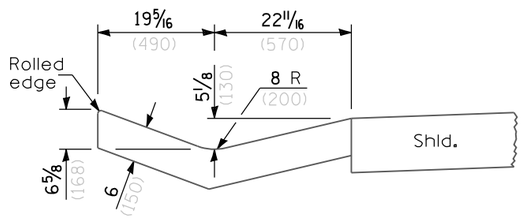

SECTION B-B

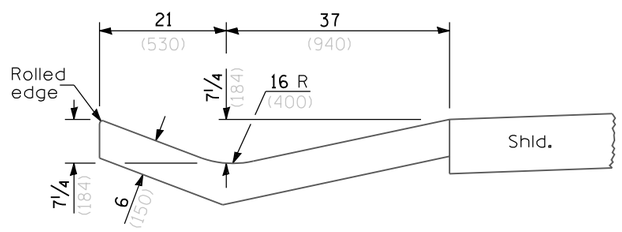

SECTION C-C

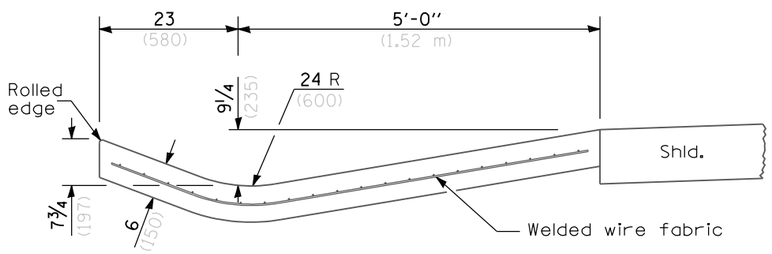

SECTION D-D

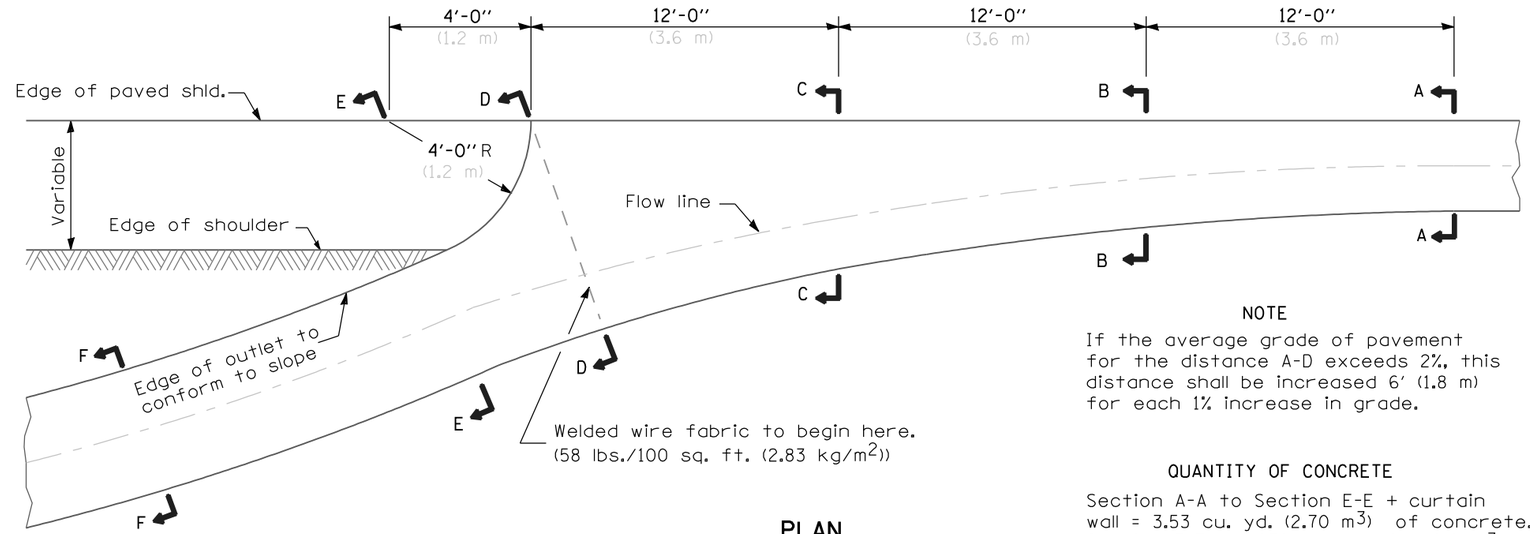

PLAN

NOTE

If the average grade of pavement for the distance A-D exceeds 2%, this distance shall be increased 6' (1.8 m) for each 1% increase in grade.

QUANTITY OF CONCRETE

Section A-A to Section E-E + curtain wall = 3.53 cu. yd. (2.70 m^3) of concrete.
Section F-F = 0.079 cu. yd./ft. (0.2 m^3/m).

OUTLET

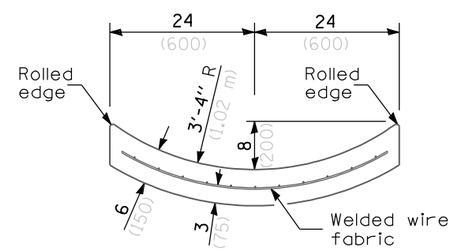

SECTION F-F

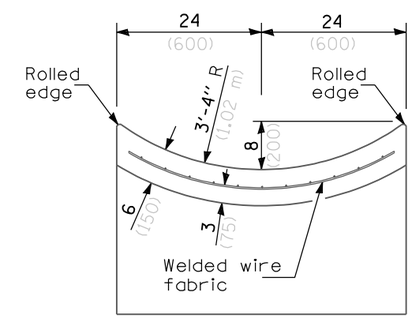

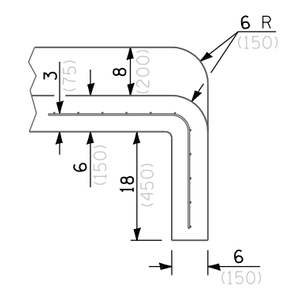

SECTIONS AT END OF OUTLET

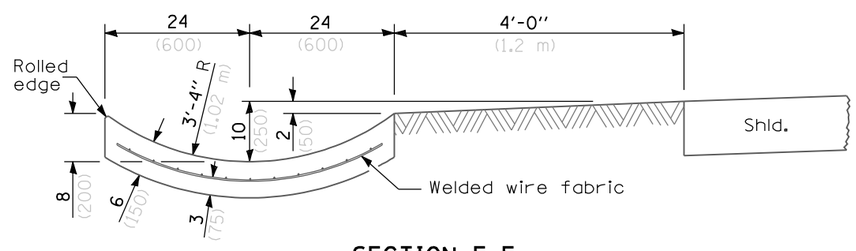

SECTION E-E

Illinois Department of Transportation

PASSED January 1, 2009
ENGINEER OF POLICY AND PROCEDURES
APPROVED January 1, 2009
ENGINEER OF DESIGN AND ENVIRONMENT

ISSUED 1-1-97

TYPE A GUTTER
(INLET, OUTLET & ENTRANCE)

(Sheet 3 of 3)

STANDARD 606101-04

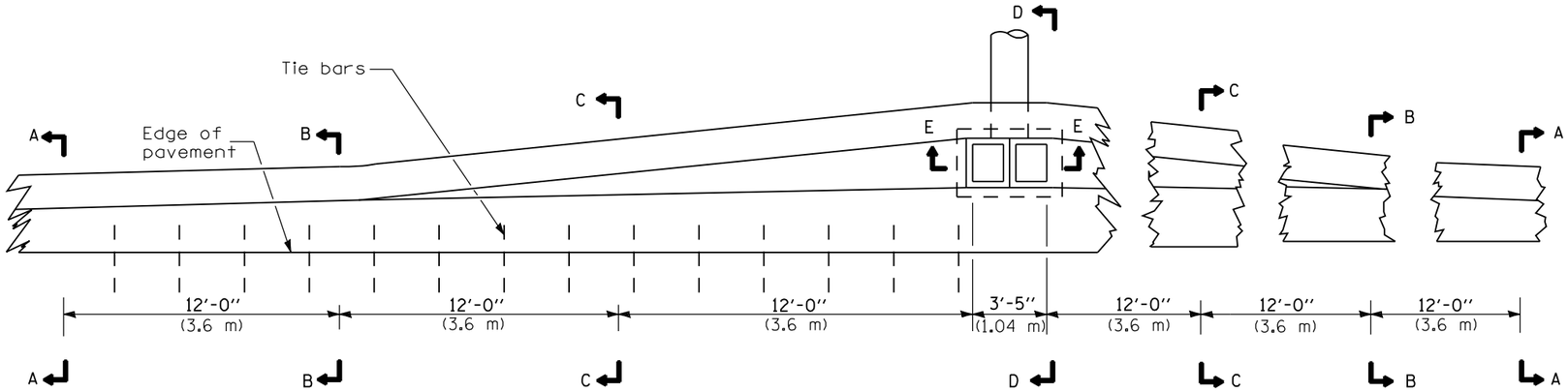

PLAN-DOUBLE OUTLET

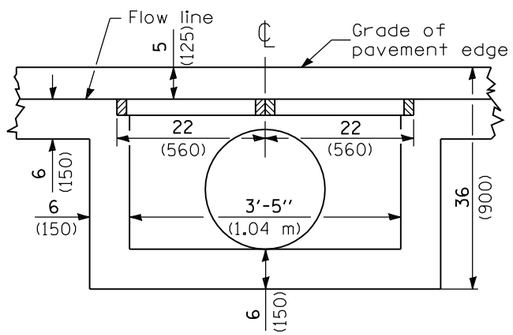

SECTION E-E

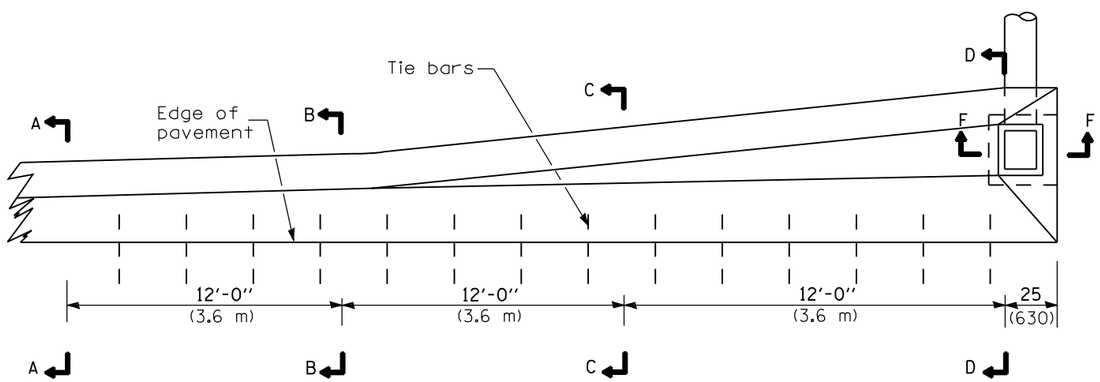

PLAN-SINGLE OUTLET

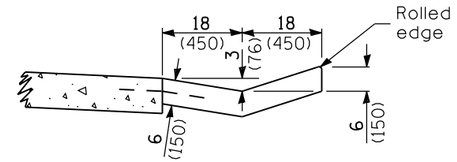

SECTION A-A

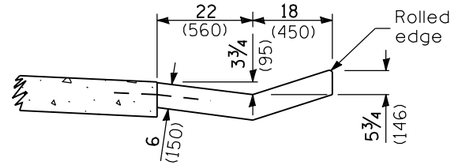

SECTION B-B

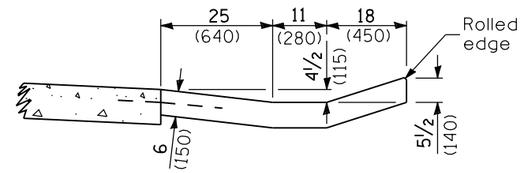

SECTION C-C

QUANTITIES

Material	Single	Double
Concrete - cu. yd. (m^3)	3.3 (2.5)	6.5 (5)
Cast Iron Grate - Ea.	1	2
Pipe Drain - Dia. in. (mm)	15 (375)	18 (450)

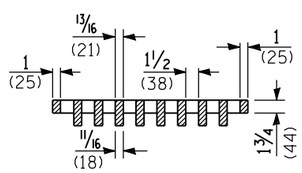

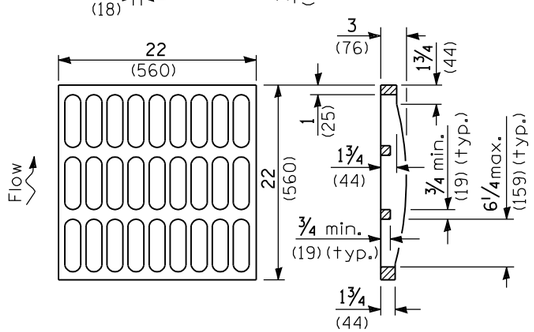

GRATE TYPE A

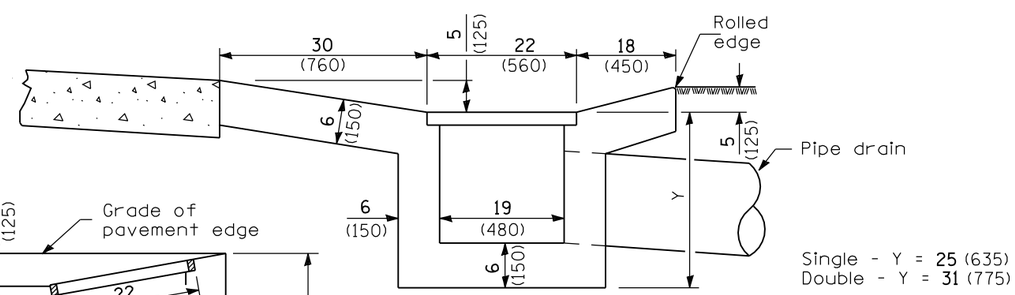

Single - Y = 25 (635)
Double - Y = 31 (775)

SECTION D-D

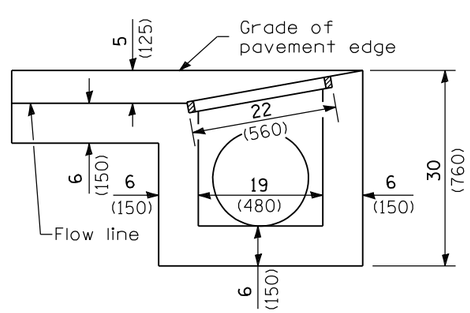

SECTION F-F

GENERAL NOTES

The gutter outlet shall be tied to the pavement in accordance with details for longitudinal construction joint shown on Standard 420001.

Tie bars shall be No. 6 (No. 19) at 24 (600) centers unless otherwise shown.

If the average grade of pavement for the distance A-D exceeds 2%, this distance shall be increased 6' (1.8 m) for each 1% increase in grade.

All dimensions are in inches (millimeters) unless otherwise shown.

Illinois Department of Transportation

PASSED January 1, 2009
ENGINEER OF POLICY AND PROCEDURES
APPROVED January 1, 2009
ENGINEER OF DESIGN AND ENVIRONMENT

ISSUED 1-1-97

DATE	REVISIONS
1-1-09	Switched units to
	English (metric).
1-1-07	Soft converted metric
	rebars. Rem. weight
	of grate.

OUTLET TYPE 1 FOR TYPE A GUTTER

STANDARD 606106-04

NOTE
If the average grade of pavement for the distance A-E exceeds 2%, this distance shall be increased **6 ft.** (1.8 m) for each 1% increase in grade.

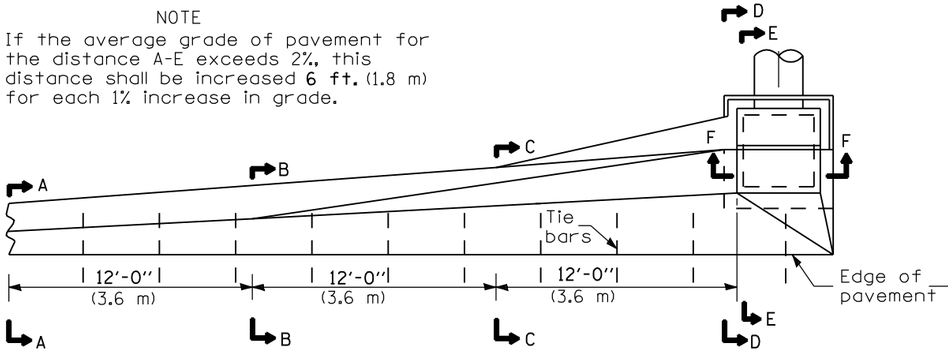

PLAN - SINGLE OUTLET

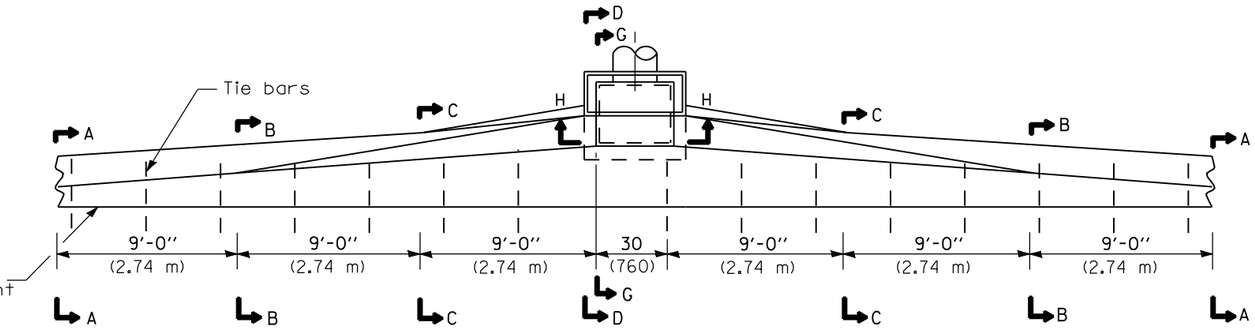

PLAN - DOUBLE OUTLET

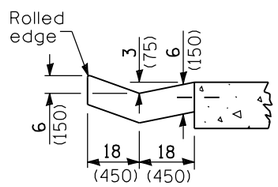

SECTION A-A

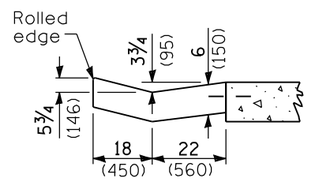

SECTION B-B

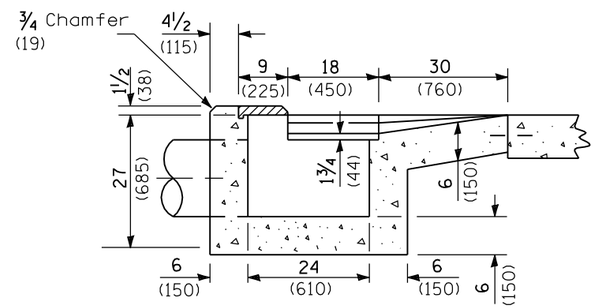

SECTION E-E

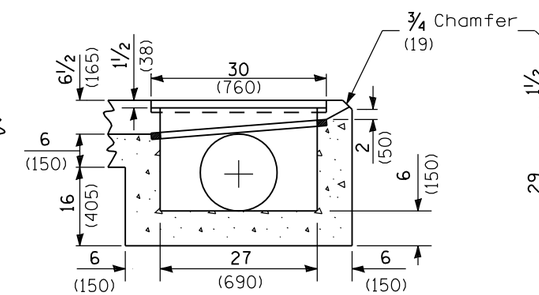

SECTION F-F

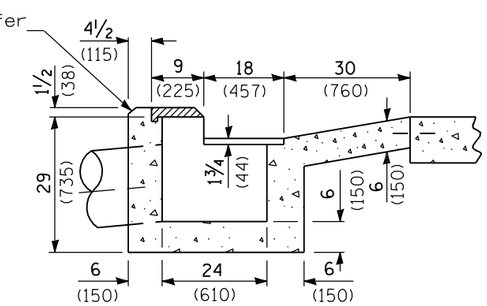

SECTION G-G

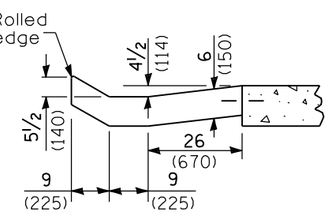

SECTION C-C

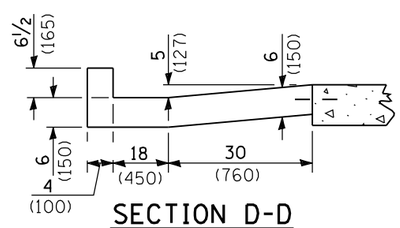

SECTION D-D

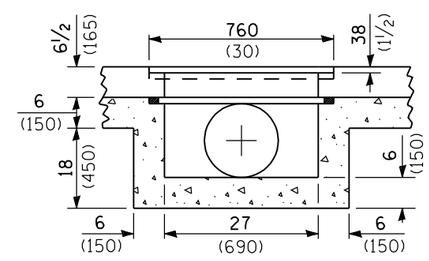

SECTION H-H

QUANTITIES

Material	Single	Double
Concrete - cu. yd. (m^3)	3.07 (2.35)	4.33 (3.31)
Cast Iron Grate- Ea.	1	1
Cast Iron Cover- Ea.	1	1
Pipe Drain - Dia. in. (mm)	15 (375)	18 (450)

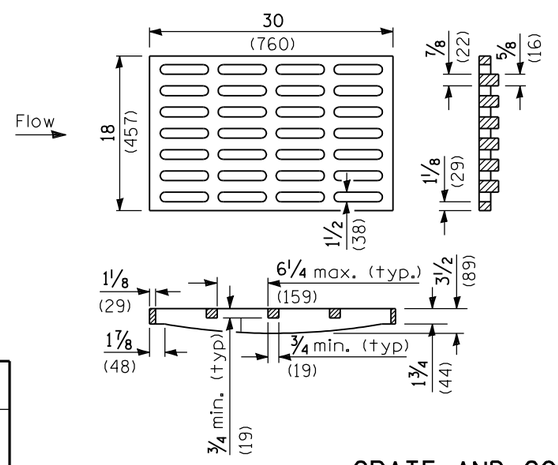

GRATE AND COVER TYPE 2A

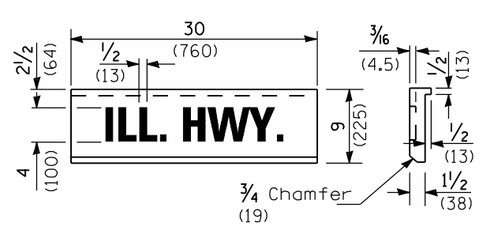

GENERAL NOTES

The gutter outlet shall be tied to the pavement in accordance with details for longitudinal construction joint shown on Standard 420001.

All dimensions are in inches (millimeters) unless otherwise shown.

Illinois Department of Transportation

PASSED January 1, 2009
ENGINEER OF POLICY AND PROCEDURES
APPROVED January 1, 2009
ENGINEER OF DESIGN AND ENVIRONMENT

ISSUED 1-1-97

DATE	REVISIONS
1-1-09	Switched units to English (metric).
1-1-07	Removed weight of grate and cover.

OUTLETS TYPE 2 FOR TYPE A GUTTER

STANDARD 606111-03

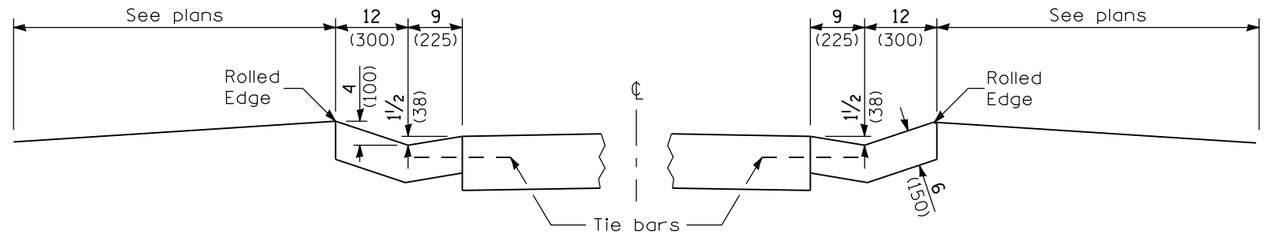

TYPE B GUTTER

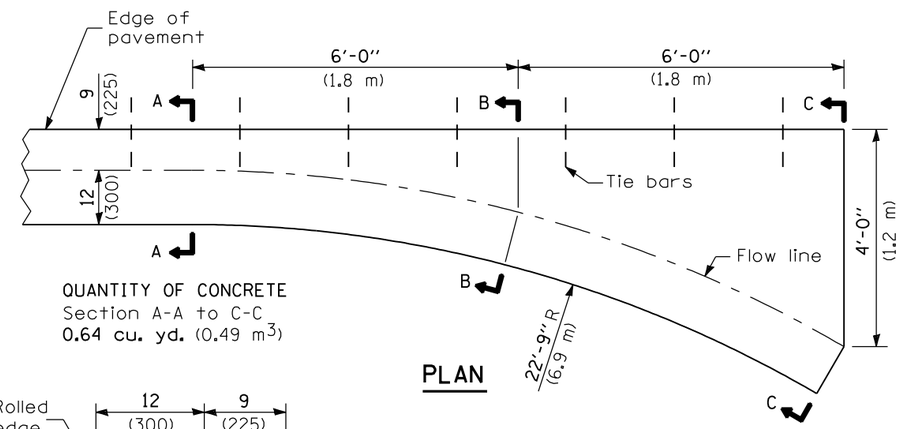

QUANTITY OF CONCRETE
Section A-A to C-C
0.64 cu. yd. (0.49 m^3)

PLAN

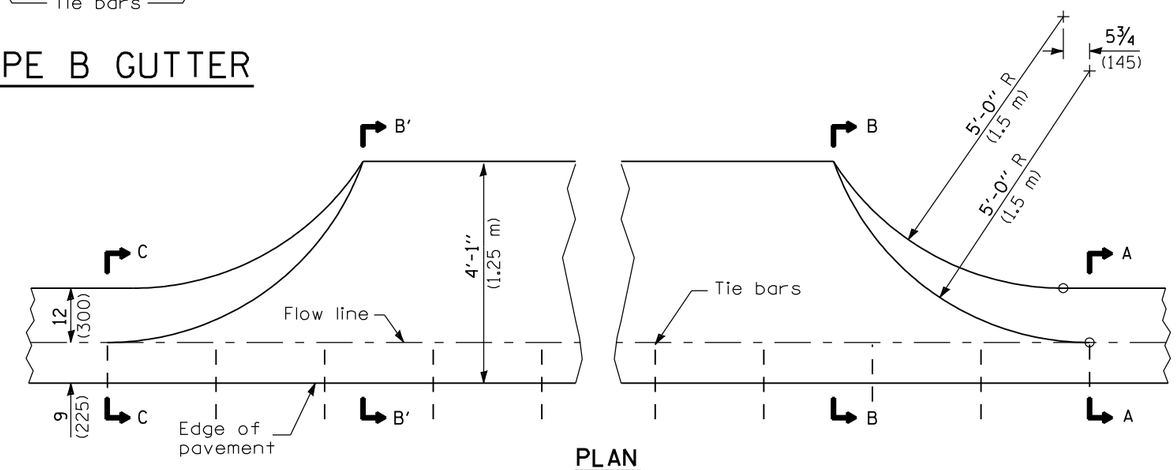

PLAN

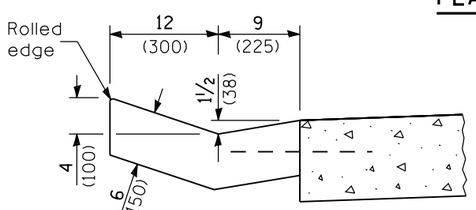

SECTION A-A

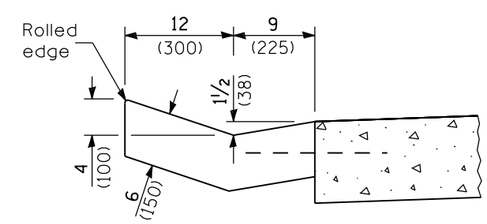

SECTIONS A-A & C-C

QUANTITY OF CONCRETE
Section B'-B' to B-B = **0.076 cu. yd./ft.** (0.19 m^3/m)
Section (C-C to B'-B') + (B-B to A-A) = **0.44 cu. yd.** (0.34 m^3)

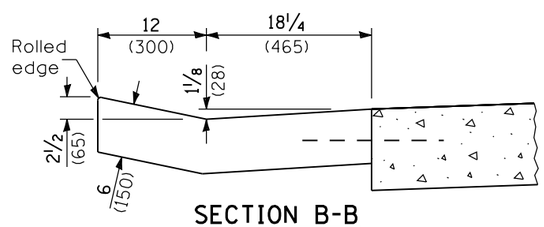

SECTION B-B

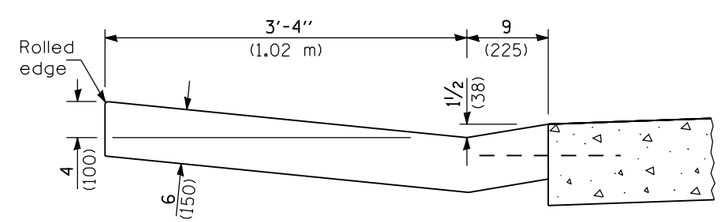

SECTIONS B-B & B'-B'

ENTRANCE

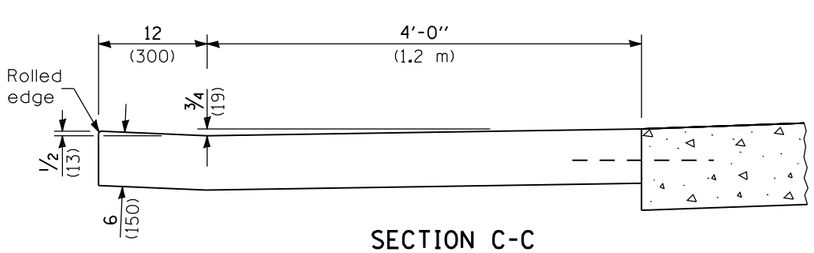

SECTION C-C

INLET

GENERAL NOTES

Tie bars shall be No. 6 (No. 19) at 24 (600) centers unless otherwise shown.

Gutter, gutter inlet, gutter outlet and gutter entrance shall be tied to the pavement in accordance with details for longitudinal construction joint shown on Standard 420001.

Two 1-1/4 x 18 (32 x 450) dowel bars shall be installed in all joints when the gutter is constructed adjacent to flexible pavement.

All dimensions are in inches (millimeters) unless otherwise shown.

Illinois Department of Transportation

PASSED January 1, 2009
ENGINEER OF POLICY AND PROCEDURES
APPROVED January 1, 2009
ENGINEER OF DESIGN AND ENVIRONMENT

ISSUED 1-1-97

DATE	REVISIONS
1-1-09	Switched units to
	English (metric). Changed
	radii, adjusted qty's.
1-1-07	Soft converted metric
	reinforcement bars.

TYPE B GUTTER (INLET, OUTLET & ENTRANCE)

(Sheet 1 of 2)

STANDARD 606201-02

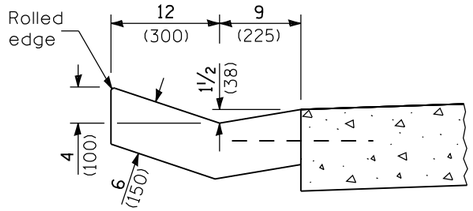

SECTION A-A

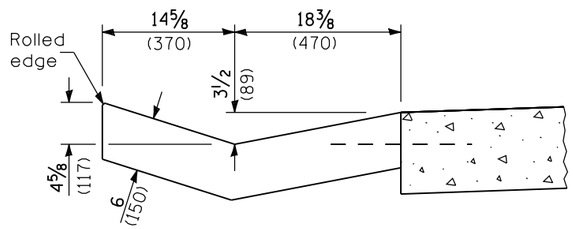

SECTION B-B

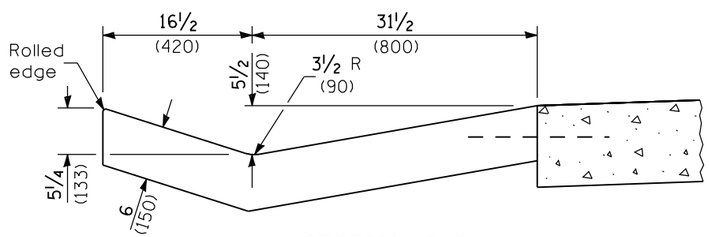

SECTION C-C

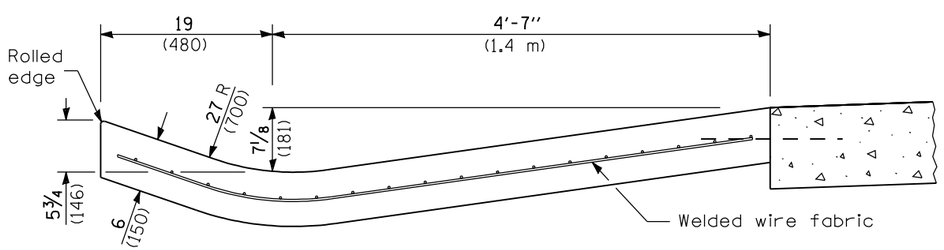

SECTION D-D

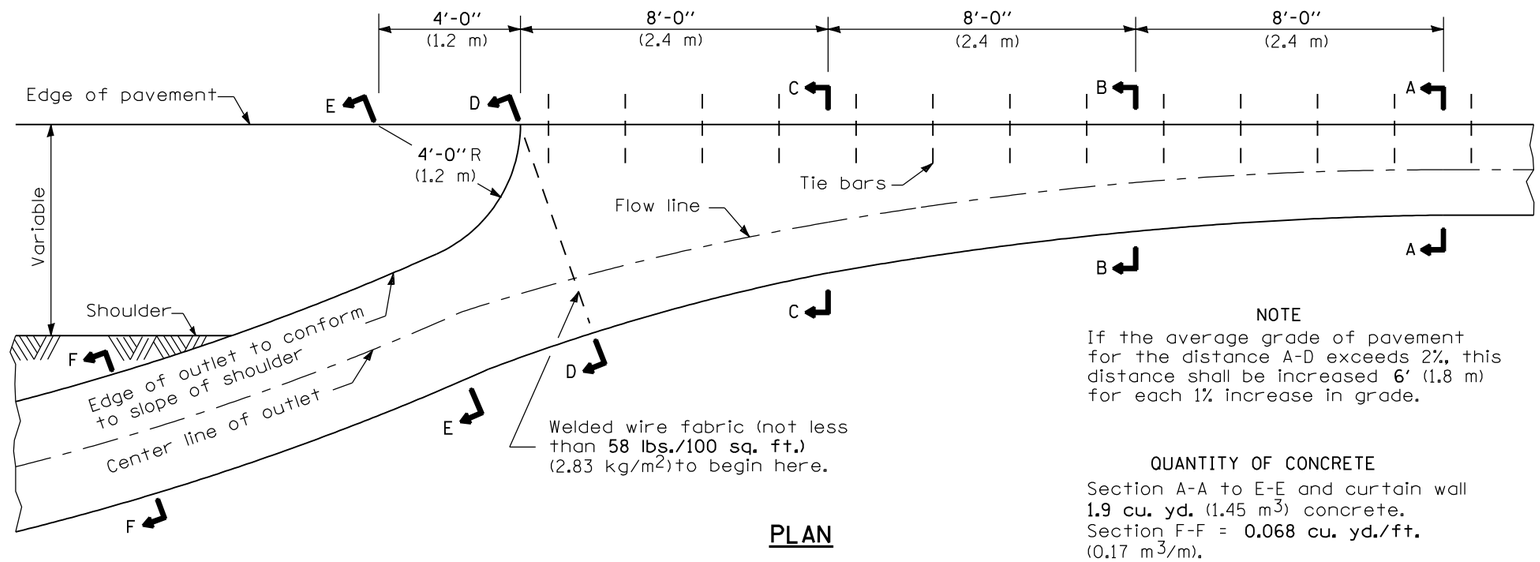

PLAN

NOTE

If the average grade of pavement for the distance A-D exceeds 2%, this distance shall be increased 6' (1.8 m) for each 1% increase in grade.

QUANTITY OF CONCRETE

Section A-A to E-E and curtain wall **1.9 cu. yd.** (1.45 m^3) concrete.
Section F-F = **0.068 cu. yd./ft.** (0.17 m^3/m).

OUTLET

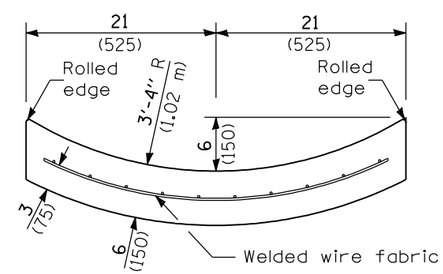

SECTION F-F

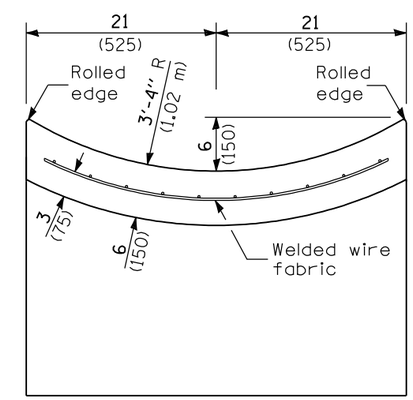

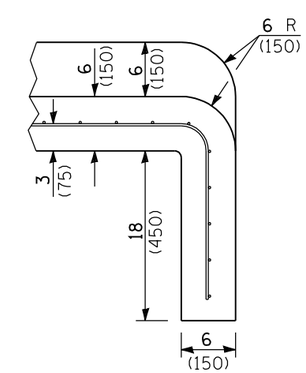

SECTIONS AT END OF OUTLET

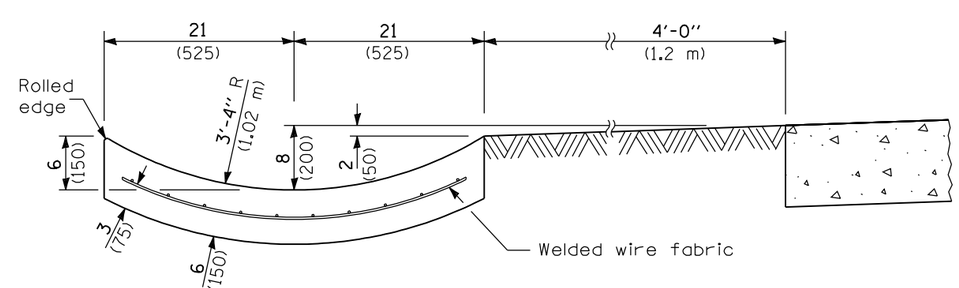

SECTION E-E

Illinois Department of Transportation

PASSED January 1, 2009
ENGINEER OF POLICY AND PROCEDURES
APPROVED January 1, 2009
ENGINEER OF DESIGN AND ENVIRONMENT

ISSUED 1-1-97

TYPE B GUTTER (INLET, OUTLET & ENTRANCE)

(Sheet 2 of 2)

STANDARD 606201-02

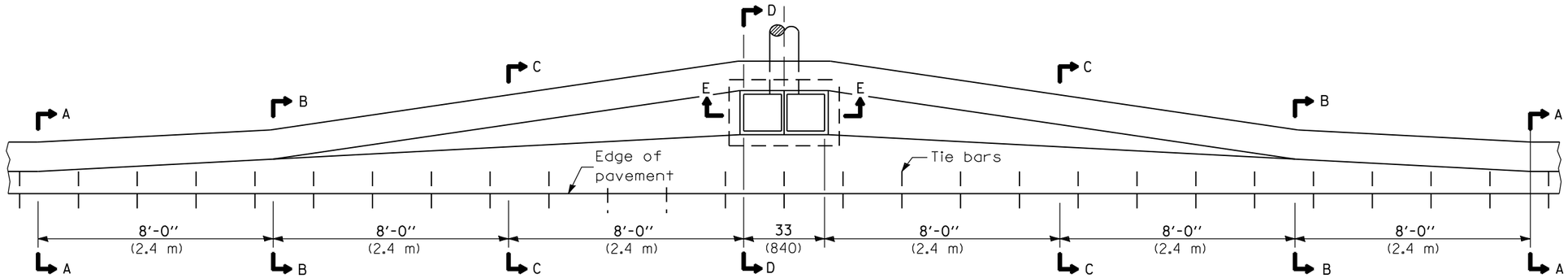

PLAN - DOUBLE OUTLET

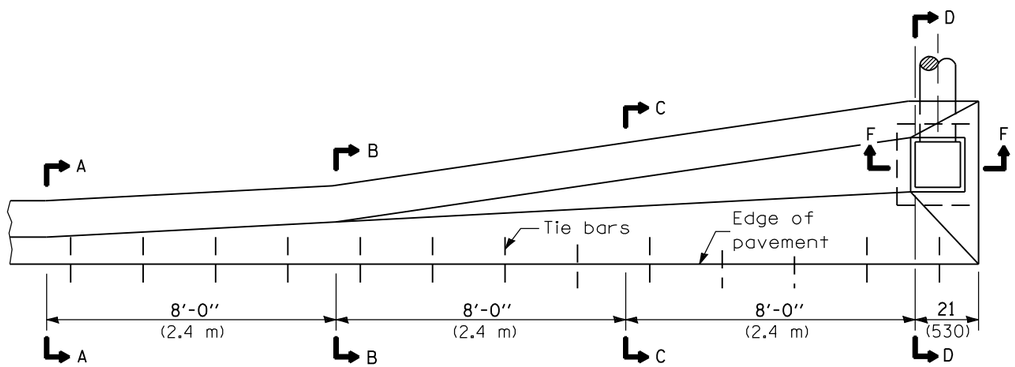

PLAN - SINGLE OUTLET

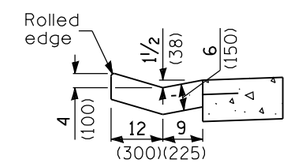

SECTION A-A

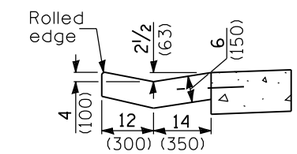

SECTION B-B

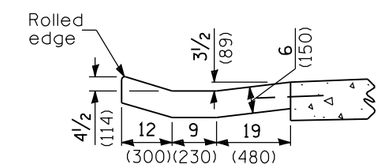

SECTION C-C

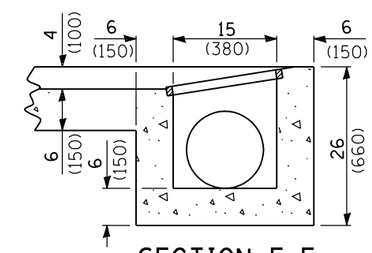

SECTION F-F

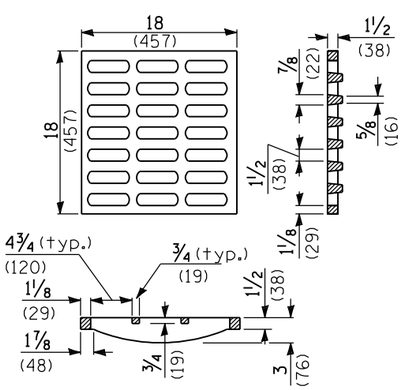

GRATE TYPE B

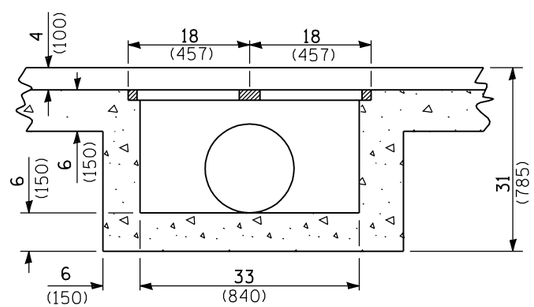

SECTION E-E

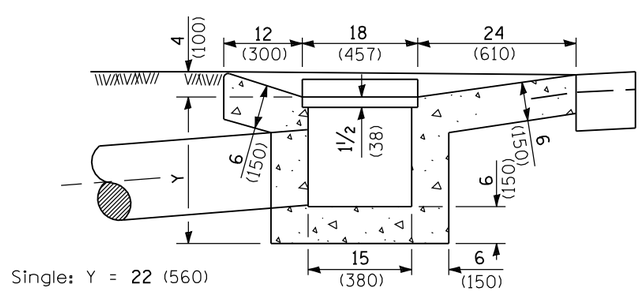

Single: Y = 22 (560)
Double: Y = 27 (685)

SECTION D-D

QUANTITIES

Material		Single	Double
Concrete -	cu. yd. (m^3)	1.7 (1.3)	3.1 (2.4)
Cast Iron Grate - Ea.		1	2
Pipe Drain - Dia.	in. (mm)	12 (300)	15 (375)

GENERAL NOTES

The gutter outlet shall be tied to the pavement in accordance with details for longitudinal construction joint shown on Standard 420001.

Tie bars shall be No. 6 (No. 19) at 24 (600) centers unless otherwise shown.

If the average grade of the pavement for the distance A-D exceeds 2%, this distance shall be increased 6'-0" (1.8 m) for each 1% increase in grade.

All dimensions are in inches (millimeters) unless otherwise shown.

Illinois Department of Transportation

PASSED January 1, 2009
ENGINEER OF POLICY AND PROCEDURES
APPROVED January 1, 2009
ENGINEER OF DESIGN AND ENVIRONMENT

ISSUED 1-1-97

DATE	REVISIONS
1-1-09	Switched units to
	English (metric).
1-1-00	Soft converted metric
	rebar. Rem. weight
	of grate.

OUTLET TYPE 1 FOR TYPE B GUTTER

STANDARD 606206-03

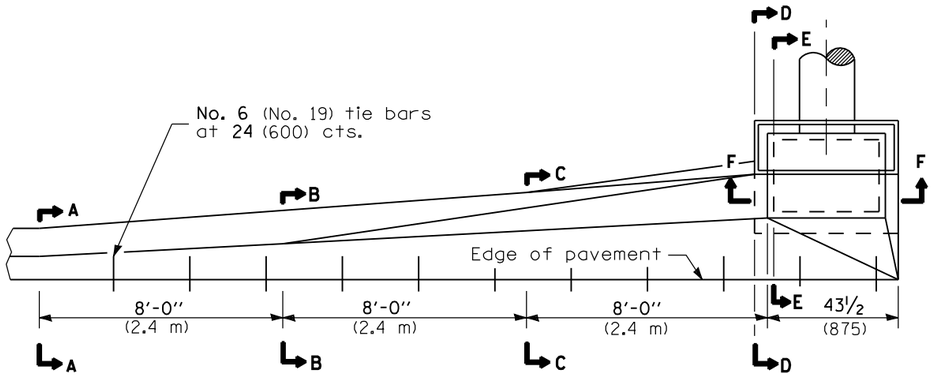

PLAN - SINGLE OUTLET

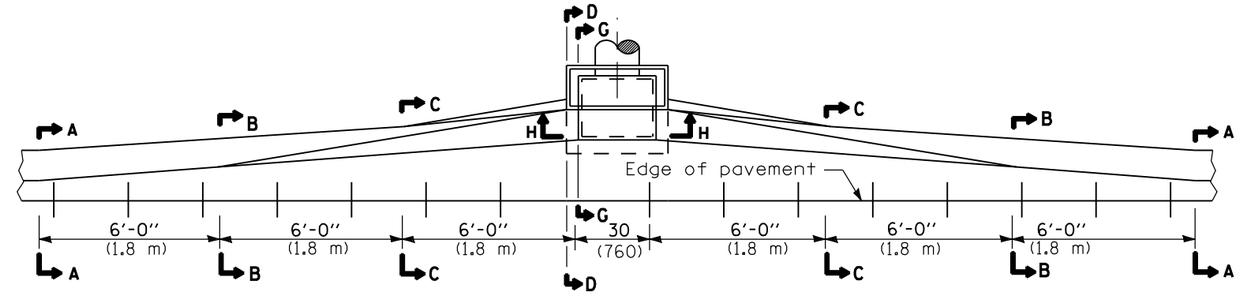

PLAN - DOUBLE OUTLET

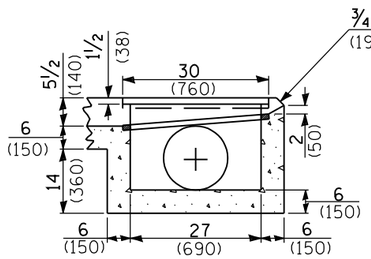

SECTION F-F

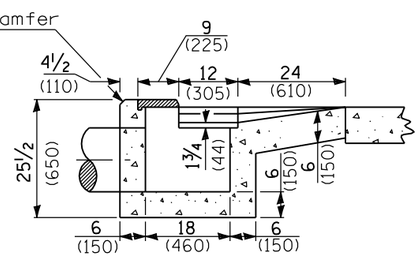

SECTION E-E

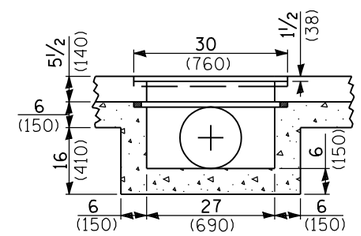

SECTION H-H

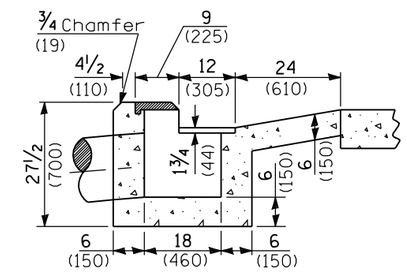

SECTION G-G

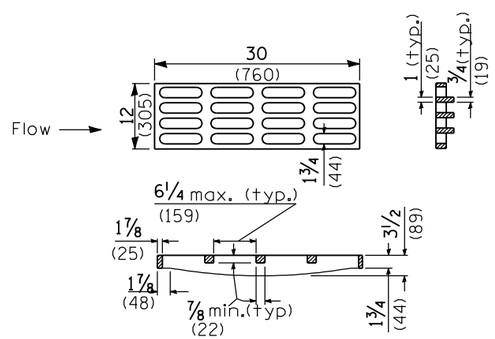

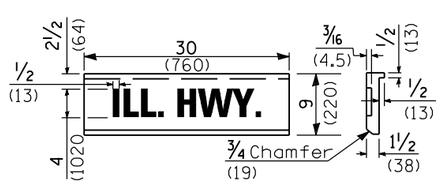

GRATE AND COVER TYPE 2B

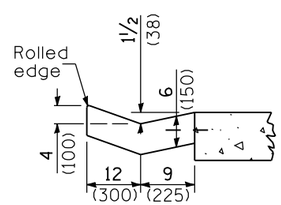

SECTION A-A

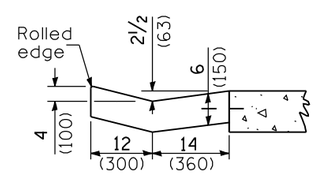

SECTION B-B

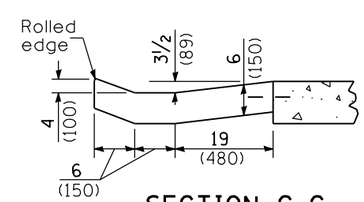

SECTION C-C

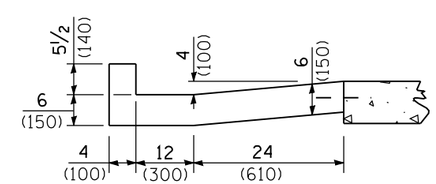

SECTION D-D

QUANTITIES

Material	Single	Double
Concrete- cu.yd. (m^3)	1.62 (1.24)	2.18 (1.67)
Cast Iron Grate- Ea.	1	1
Cast Iron Cover- Ea.	1	1
Pipe Drain - Dia. in. (mm)	12 (300)	15 (375)

GENERAL NOTES

If the average grade of pavement for the distance A-E exceeds 2 percent, this distance shall be increased 6 ft. (1.8 m) for each 1 percent increase in grade.

The gutter outlet shall be tied to the pavement in accordance with details for longitudinal construction joint shown on Standard 420001.

All dimensions are in inches (millimeters) unless otherwise shown.

Illinois Department of Transportation

PASSED January 1, 2009
ENGINEER OF POLICY AND PROCEDURES
APPROVED January 1, 2009
ENGINEER OF DESIGN AND ENVIRONMENT

ISSUED 1-1-97

DATE	REVISIONS
1-1-09	Switched units to English (metric).
1-1-07	Soft converted metric rebars. Rem. weights of grate & cover.

OUTLETS TYPE 2 FOR TYPE B GUTTER

STANDARD 606211-03

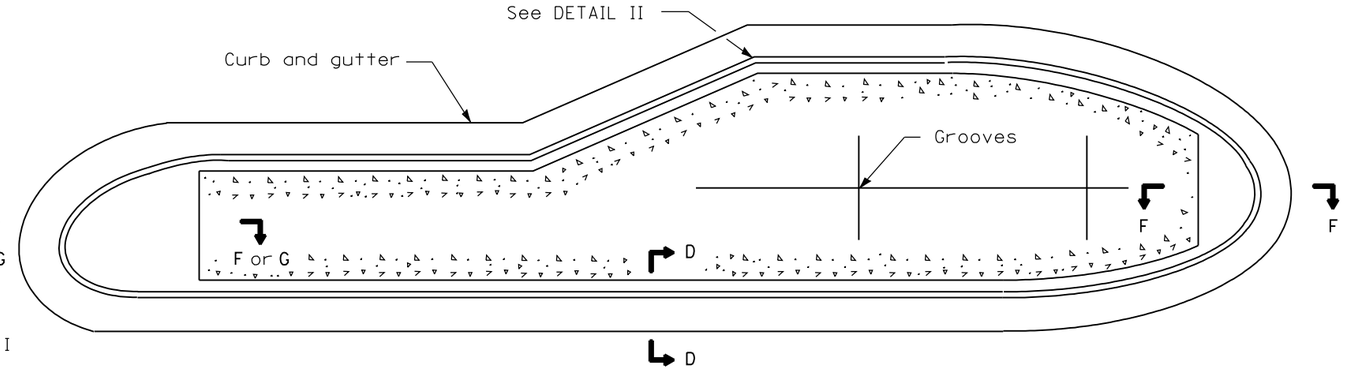

TYPICAL PLAN OF MEDIAN ISLAND

(SEE SHEET 2 FOR DETAILS OF RAMPED NOSES)

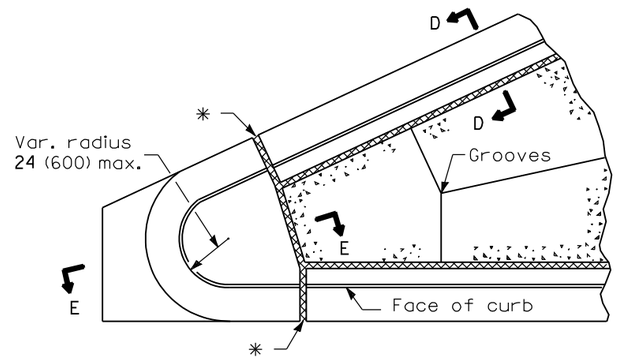

DETAIL I

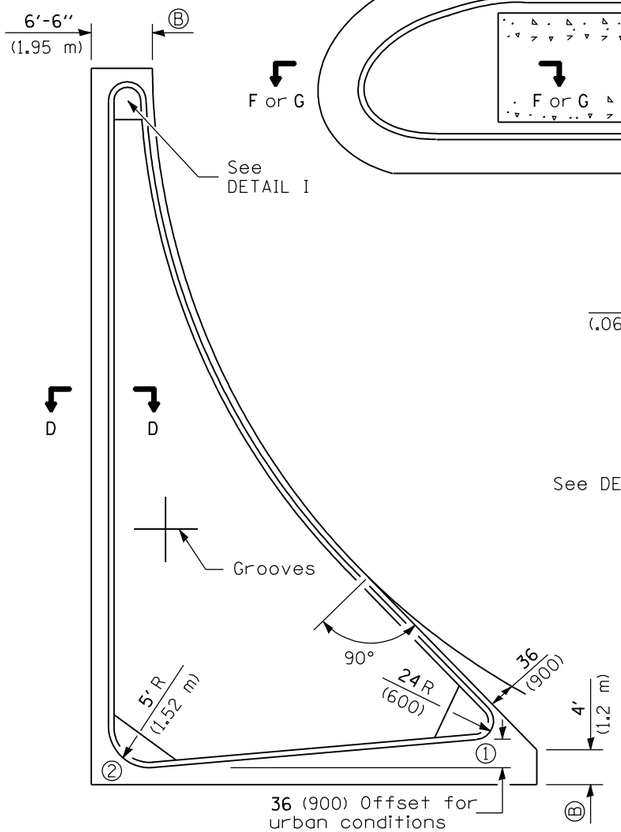

LARGE ISLAND

(FREE FLOW DESIGN)

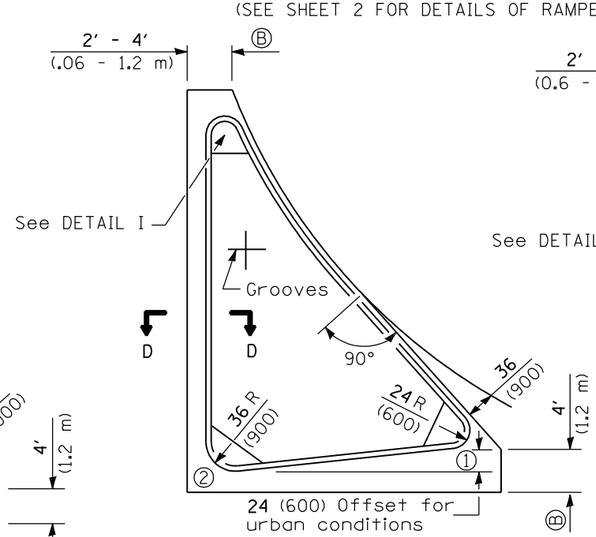

INTERMEDIATE ISLAND

(FOR RIGHT TURN LANE DESIGN)

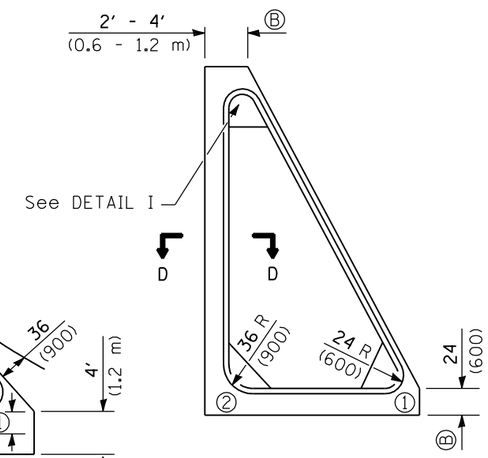

SMALL ISLAND

TYPICAL PLANS OF CORNER ISLANDS

(SEE SHEET 2 FOR DETAILS OF RAMPED NOSES)

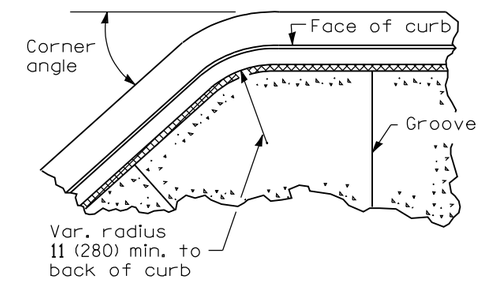

DETAIL II

Typical detail when corner angle is less than 90° and for other corners with radius greater than 24 (600).

NOTE

The blockouts Ⓑ for the islands shall be extended so that the termination will line up with proposed or existing pavement joint.

Noses ① and ② shall be ramped unless noted otherwise on the plans. (See sheet 2 for length)

GENERAL NOTES

PEJF = Preformed expansion joint filler.

Median layout and radii shall be as shown on the plans.

Keyed longitudinal construction joints shall be constructed without tie bars.

See Standard 420001 and 606001 for details not shown.

* 3/4 (20) PEJF conforming to the full cross section of the curb, gutter and median surface.

X = PCC base course plus HMA thickness.

t = Pavement or pcc base course thickness.

All dimensions are in inches (millimeters) unless otherwise shown.

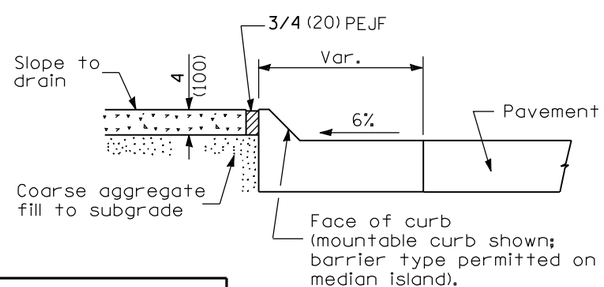

SECTION D-D

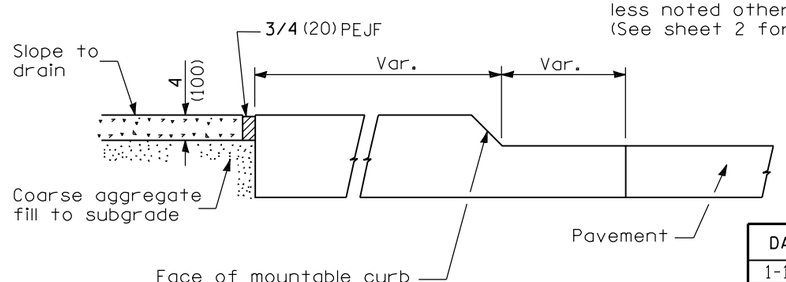

SECTION E-E

Illinois Department of Transportation

PASSED January 1, 2009
ENGINEER OF POLICY AND PROCEDURES
APPROVED January 1, 2009
ENGINEER OF DESIGN AND ENVIRONMENT

ISSUED 1-1-97

DATE	REVISIONS
1-1-09	Switched units to
	English (metric).
1-1-07	Switched to Hot-Mix
	Asphalt (HMA)
	terminology.

PC CONCRETE ISLANDS AND MEDIANS

(Sheet 1 of 2)

STANDARD 606301-04

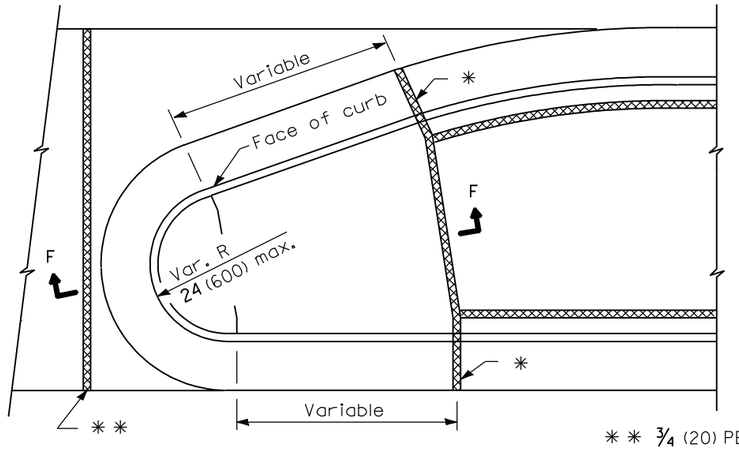

TYPE P MEDIAN SURFACE

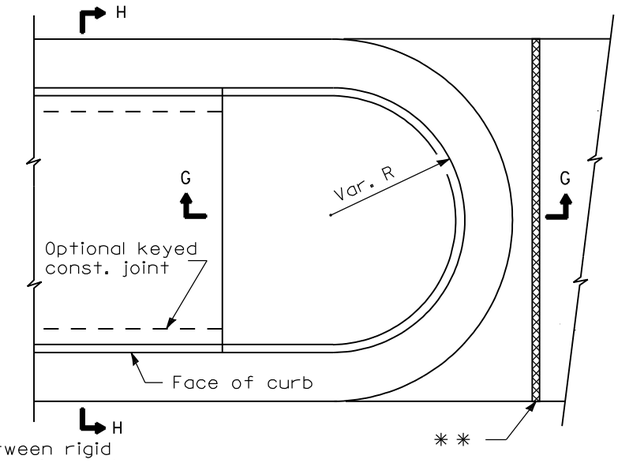

SOLID MEDIAN

* * ¾ (20) PEJF between rigid pavement and median end. Align with joint in adjacent pavement.

PLAN
(RAMPED NOSES)

TABLE OF DIMENSIONS					
TYPE SB MEDIANS					
TYPE	A	B	C	D	R_1
SB-6.06 (SB-15.15)	6 (150)	1 (25)	6 (150)	6 (150)	1 (25)
SB-6.12 (SB-15.30)	12 (300)	1 (25)	6 (150)	6 (150)	1 (25)
SB-6.18 (SB-15.45)	18 (450)	1 (25)	6 (150)	6 (150)	1 (25)
SB-6.24 (SB-15.60)	24 (600)	1 (25)	6 (150)	6 (150)	1 (25)
SB-9.06 (SB-22.15)	6 (150)	2 (50)	5 (125)	9 (225)	1 (25)
SB-9.12 (SB-22.30)	12 (300)	2 (50)	5 (125)	9 (225)	1 (25)
SB-9.18 (SB-22.45)	18 (450)	2 (50)	5 (125)	9 (225)	1 (25)
SB-9.24 (SB-22.60)	24 (600)	2 (50)	5 (125)	9 (225)	1 (25)

TABLE OF DIMENSIONS					
TYPE M AND SM MEDIANS					
TYPE	A	B	C	D	R_1
M-2.06 (M-5.15)	6 (150)	2 (50)	4 (100)	2 (50)	2 (50)
M-2.12 (M-5.30)	12 (300)	2 (50)	4 (100)	2 (50)	2 (50)
SM-4.06 (SM-10.15)	6 (150)	4 (100)	3 (75)	4 (100)	3 (75)
SM-4.12 (SM-10.30)	12 (300)	4 (100)	3 (75)	4 (100)	3 (75)
SM-4.18 (SM-10.45)	18 (450)	4 (100)	3 (75)	4 (100)	3 (75)
SM-4.24 (SM-10.60)	24 (600)	4 (100)	3 (75)	4 (100)	3 (75)
SM-6.06 (SM-15.15)	6 (150)	6 (150)	2 (50)	6 (150)	2 (50)
SM-6.12 (SM-15.30)	12 (300)	6 (150)	2 (50)	6 (150)	2 (50)
SM-6.18 (SM-15.45)	18 (450)	6 (150)	2 (50)	6 (150)	2 (50)
SM-6.24 (SM-15.60)	24 (600)	6 (150)	2 (50)	6 (150)	2 (50)

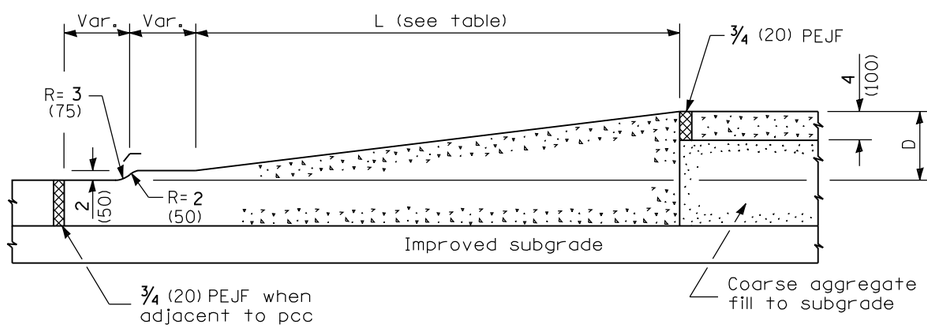

SECTION F-F

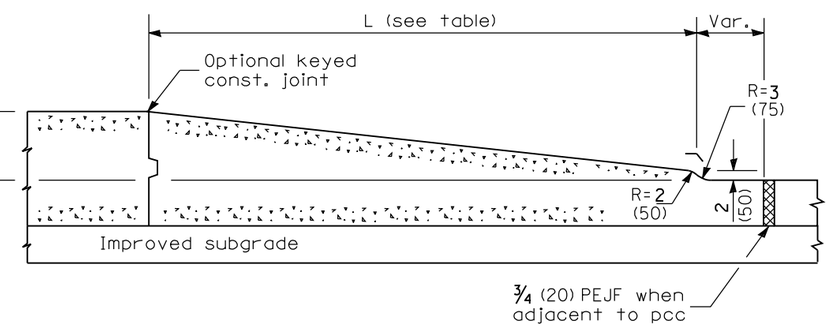

SECTION G-G

TABLE OF RAMPED NOSE LENGTHS	
TYPE OF NOSE	L
Median	6′ (1.8 m)
Small Island	24 (600)
Intermediate Island	4′ (1.2 m)
Large Island	6′ (1.8 m)

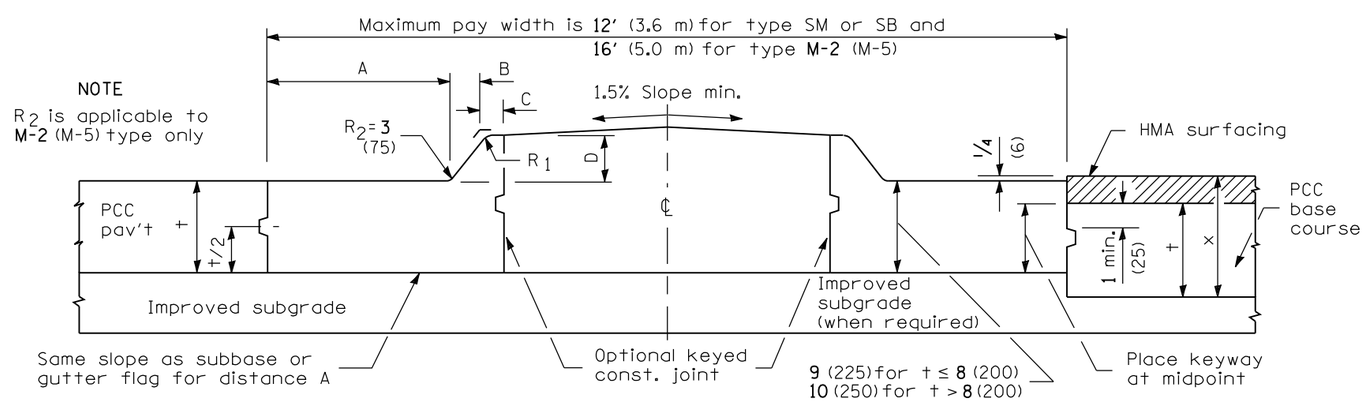

HALF SECTION FOR PCC PAVEMENT

HALF SECTION FOR PCC BASE COURSE

SECTION H-H
(TYPE SM, SB & M-5 (M-2) MEDIANS)

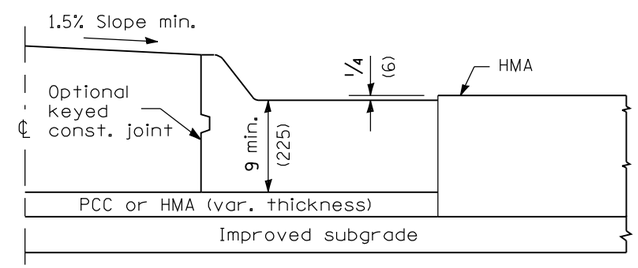

HALF SECTION FOR FLEXIBLE PAVEMENT

Illinois Department of Transportation

PASSED January 1, 2009
ENGINEER OF POLICY AND PROCEDURES
APPROVED January 1, 2009
ENGINEER OF DESIGN AND ENVIRONMENT

ISSUED 1-1-97

PC CONCRETE ISLANDS AND MEDIANS

(Sheet 2 of 2)

STANDARD 606301-04

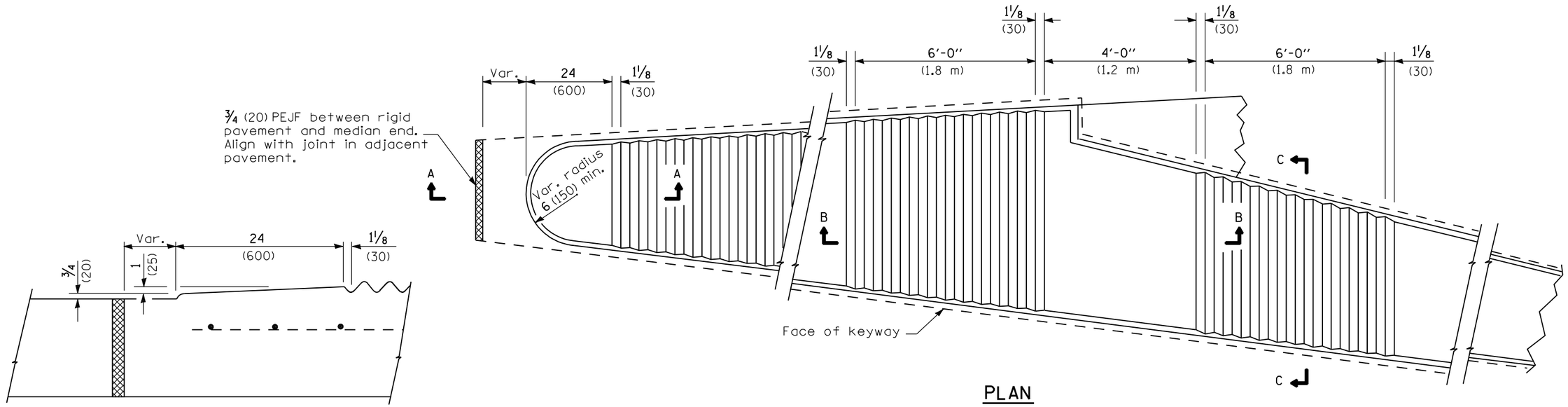

SECTION A-A

PLAN

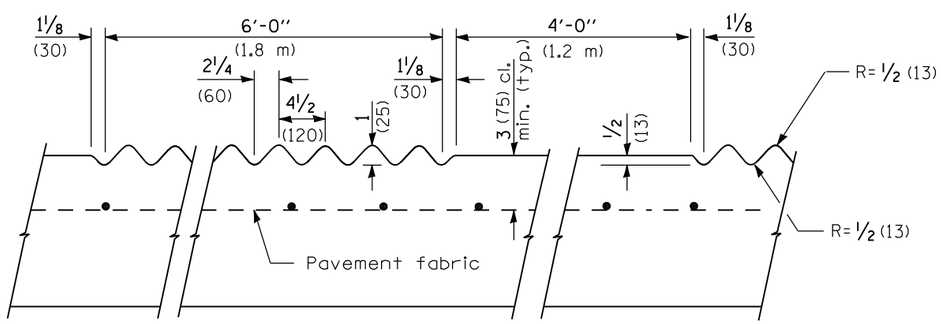

SECTION B-B

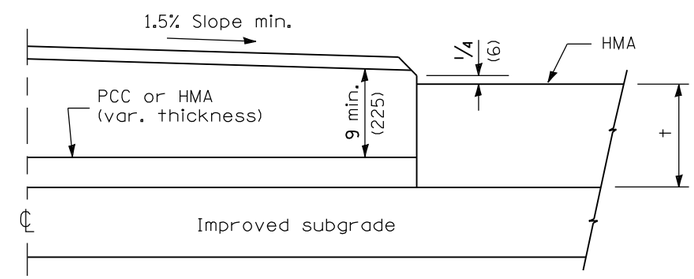

HALF SECTION FOR FLEXIBLE PAVEMENT

SECTION C-C

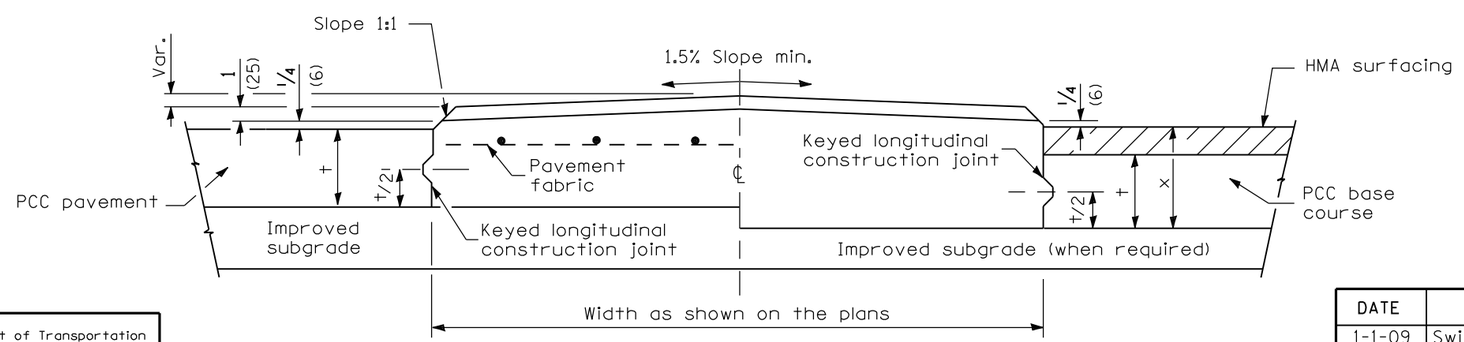

HALF SECTION FOR PCC PAVEMENT

SECTION C-C

HALF SECTION FOR PCC BASE COURSE

GENERAL NOTES

PEJF = Preformed expansion joint filler.

Median layout and radii shall be as shown on the plans.

Keyed longitudinal construction joints shall be constructed without tie bars.

X = PCC base course plus HMA thickness.

t = Pavement or pcc base course thickness.

Fabric required for medians built contiguous to reinforced pcc pavement only.

See Standards 420001 and 420701 for details not shown.

All dimensions are in inches (millimeters) unless otherwise shown.

Illinois Department of Transportation

PASSED January 1, 2009
ENGINEER OF POLICY AND PROCEDURES

APPROVED January 1, 2009
ENGINEER OF DESIGN AND ENVIRONMENT

ISSUED 1-1-97

DATE	REVISIONS
1-1-09	Switched units to
	English (metric).
1-1-98	Switched to Hot-Mix
	Asphalt (HMA)
	terminology.

CORRUGATED PC CONCRETE MEDIANS

STANDARD 606306–03

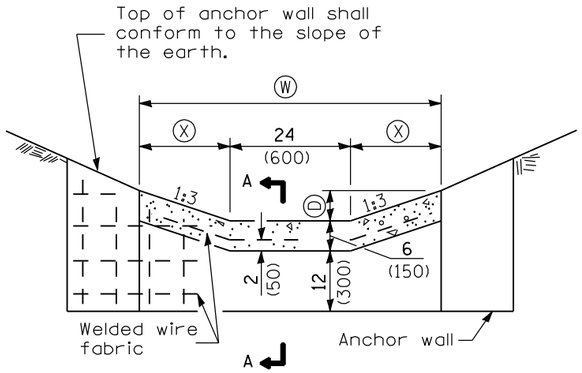

ELEVATION

PAVED DITCH TYPE A

TABLE FOR PAVED DITCH TYPE A

TYPE	D	W	X	Flow Area sq. ft. (m^2)	Conc. Area sq. yd. (m^2)
A-15	6 (150)	5'-0" (1.5 m)	18 (450)	1.75 (0.175)	0.278 (0.225)
A-22	9 (225)	6'-6" (1.95 m)	27 (675)	3.19 (0.287)	0.361 (0.293)
A-30	12 (300)	8'-0" (2.4 m)	36 (900)	5.00 (0.450)	0.444 (0.360)
A-37	15 (375)	9'-6" (2.85 m)	3'-9" (1.12 m)	7.19 (0.645)	0.528 (0.426)
A-45	18 (450)	11'-0" (3.3 m)	4'-6" (1.35 m)	9.75 (0.877)	0.611 (0.495)
A-52	21 (525)	12'-6" (3.75 m)	5'-3" (1.58 m)	12.69 (1.144)	0.694 (0.564)
A-60	24 (600)	14'-0" (4.2 m)	6'-0" (1.8 m)	16.00 (1.440)	0.778 (0.630)

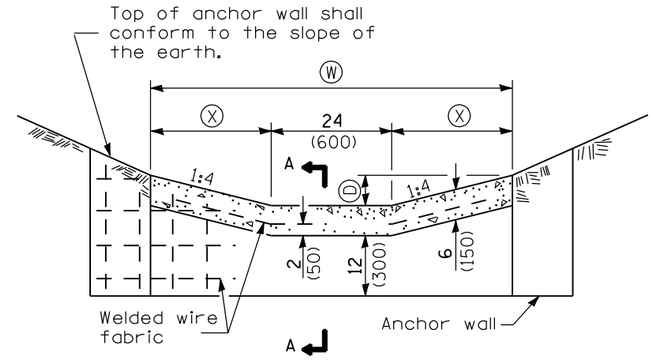

ELEVATION

PAVED DITCH TYPE B

TABLE FOR PAVED DITCH TYPE B

TYPE	D	W	X	Flow Area sq. ft. (m^2)	Conc. Area sq. yd. (m^2)
B-15	6 (150)	6'-0" (1.8 m)	24 (600)	2.00 (0.180)	0.333 (0.270)
B-22	9 (225)	8'-0" (2.4 m)	36 (900)	3.75 (0.337)	0.444 (0.360)
B-30	12 (300)	10'-0" (3.0 m)	4'-0" (1.2 m)	6.00 (0.540)	0.555 (0.450)
B-37	15 (375)	12'-0" (3.6 m)	5'-0" (1.5 m)	8.75 (0.787)	0.667 (0.540)
B-45	18 (450)	14'-0" (4.2 m)	6'-0" (1.8 m)	12.00 (1.080)	0.778 (0.630)
B-52	21 (525)	16'-0" (4.8 m)	7'-0" (2.1 m)	15.75 (1.417)	0.889 (0.720)
B-60	24 (600)	18'-0" (5.4 m)	8'-0" (2.4 m)	20.00 (1.800)	1.000 (0.810)

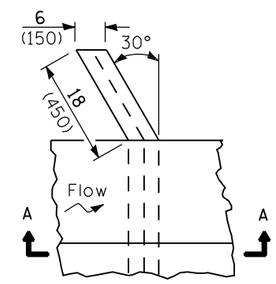

DETAIL A

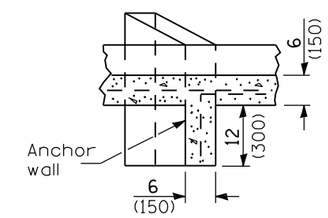

SECTION A-A

DETAIL OF ANCHOR WALL

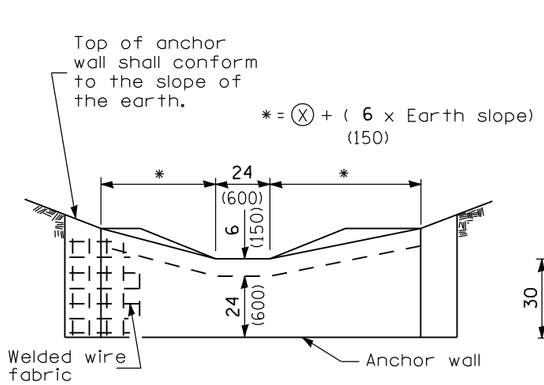

ELEVATION

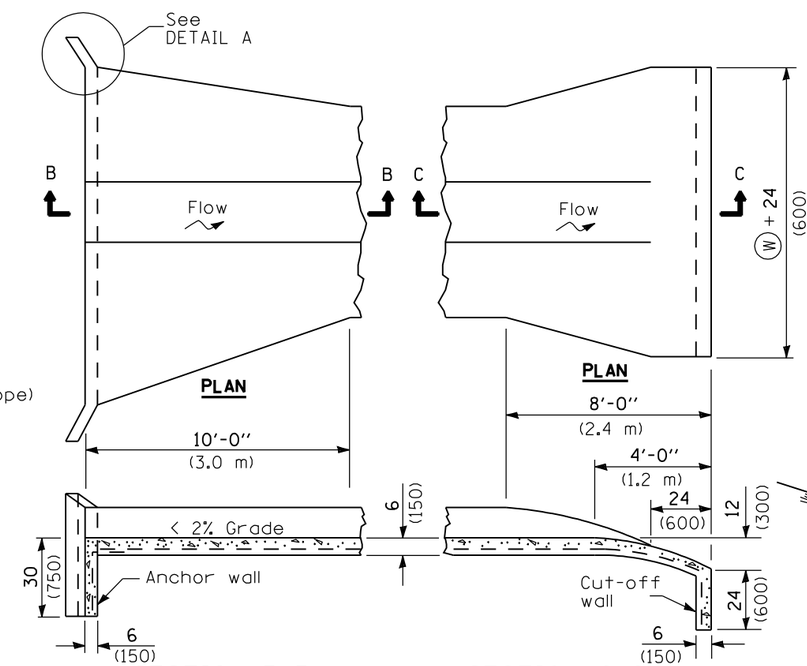

SECTION B-B

SECTION C-C

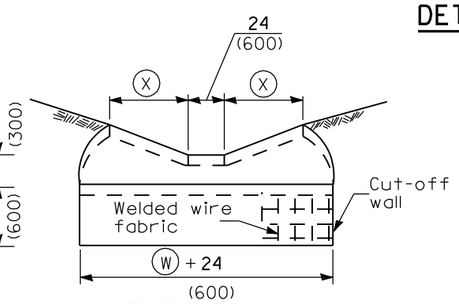

ELEVATION

DETAIL OF UPSTREAM END

DETAIL OF DOWNSTREAM END

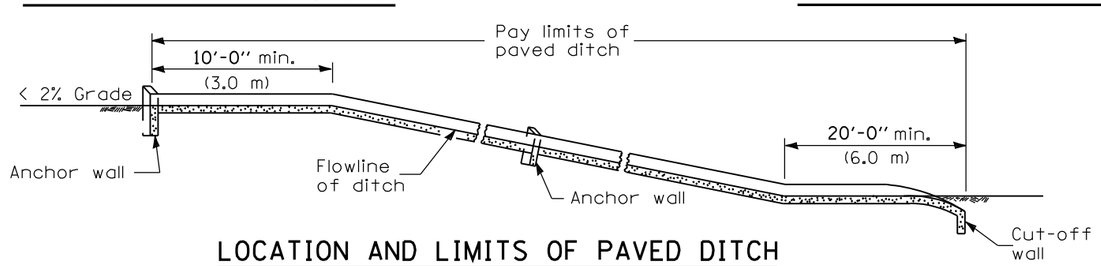

LOCATION AND LIMITS OF PAVED DITCH

GENERAL NOTES

All slopes are expressed as of vertical displacement to units of horizontal displacement (V:H).

All dimensions are in inches (millimeters) unless otherwise shown.

Illinois Department of Transportation

PASSED January 1, 2009
ENGINEER OF POLICY AND PROCEDURES
APPROVED January 1, 2009
ENGINEER OF DESIGN AND ENVIRONMENT

ISSUED 1-1-97

DATE	REVISIONS
1-1-09	Switched units to English (metric).
1-1-97	Renum. Standard 2258-5. Deleted DN Symbol.

PAVED DITCH

STANDARD 606401-01

* Type B, C, or D inlet box as required.

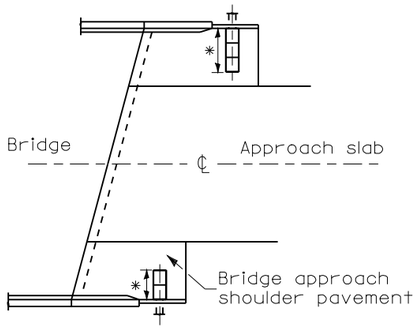

GENERAL PLAN

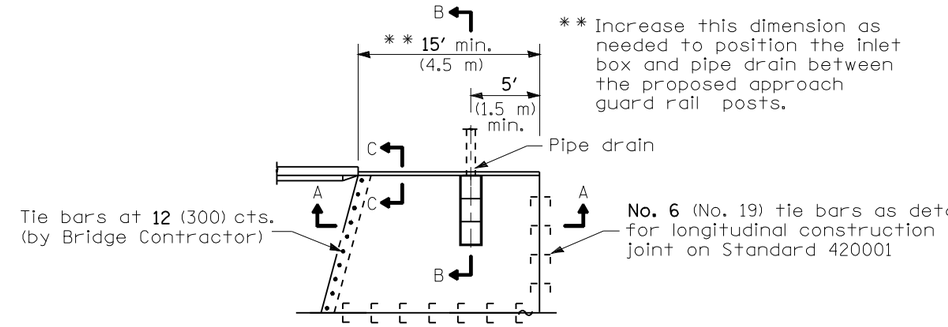

TYPICAL DETAIL PLAN

(W/O Wingwall)

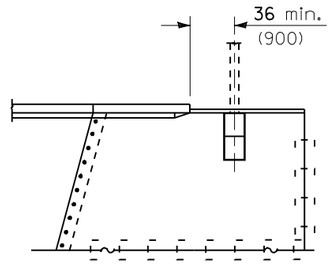

TYPICAL DETAIL PLAN

(With Wingwall)
Dimensions and notes not shown shall be the same as w/o wingwall detail plan above.

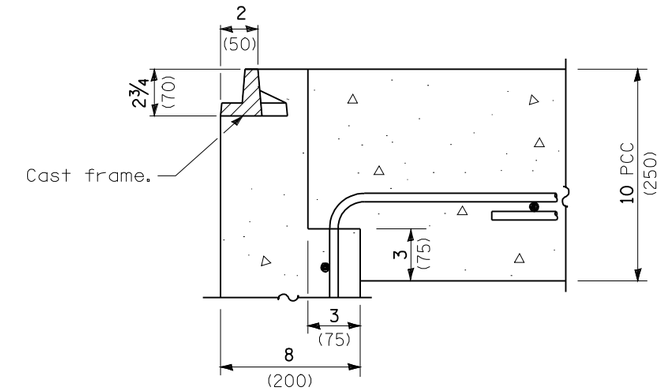

DETAIL A

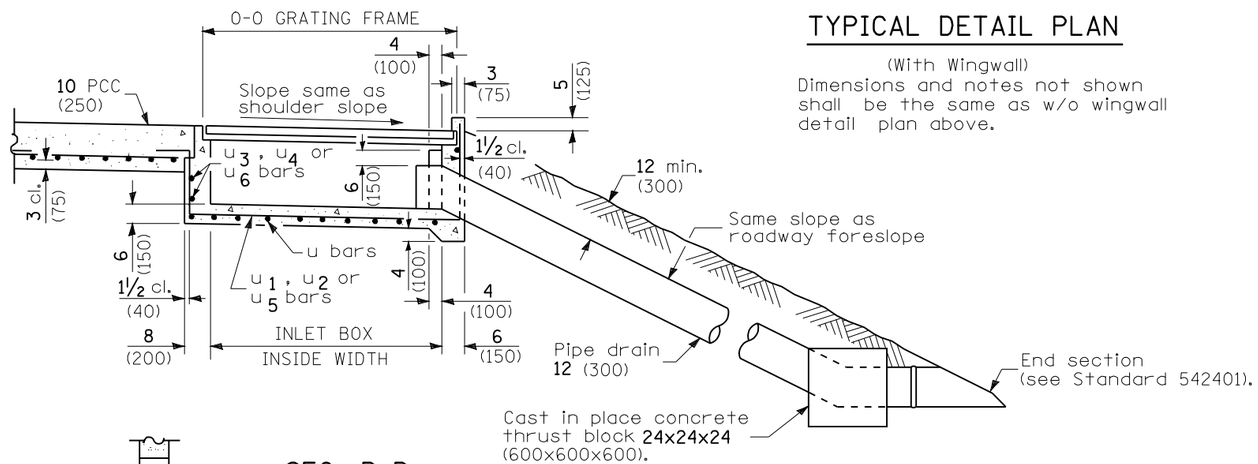

SEC. B-B

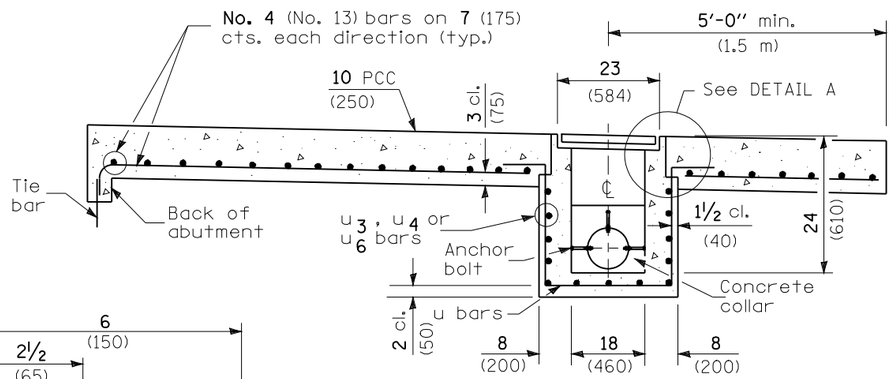

SEC. A-A

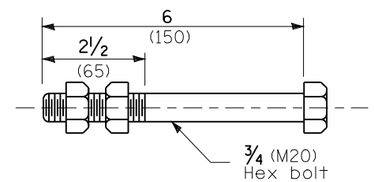

ANCHOR BOLT

(Used to tie pipe to concrete collar)

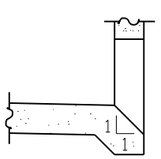

BOX OUTLET WHEN PRECAST

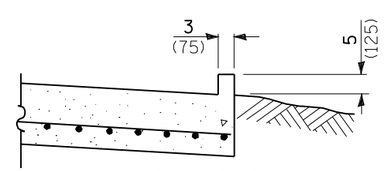

SEC. C-C

INLET TYPE	SHOULDER WIDTH	O-O GRATING FRAME	INLET BOX INSIDE WIDTH	INLET BOX INSIDE LENGTH
Type B	Less than 5′ (1.5 m)	2′-3″ (0.690 m)	1′-10″ (0.560 m)	18 (460)
Type C	5′ - 6′ (1.5 m) (1.8 m)	4′-4″ (1.325 m)	3′-11″ (1.195 m)	18 (460)
Type D	Greater than 6′ (1.8 m)	6′-5″ (1.960 m)	6′-0″ (1.830 m)	18 (460)

GENERAL NOTES

All exposed edges of the inlet, except the upper perimeter, shall be beveled ¾ (20).

For placement of approach shoulder pavement on existing construction substitute expansion anchor ties for bars. Omit tie bars for flexible approaches or bridge approach shoulder pavement constructed monolithically with shoulder pavement.

All dimensions are in inches (millimeters) unless otherwise shown.

Illinois Department of Transportation

PASSED January 1, 2010
ENGINEER OF POLICY AND PROCEDURES
APPROVED January 1, 2010
ENGINEER OF DESIGN AND ENVIRONMENT

ISSUED 1-1-97

DATE	REVISIONS
1-1-10	Added bolt-down to
	frame & grate. Omitted
	steel frame.
1-1-09	Switched units to
	English (metric).

BRIDGE APPROACH SHOULDER PAVEMENT AND DRAIN

(Sheet 1 of 2)

STANDARD 609001–05

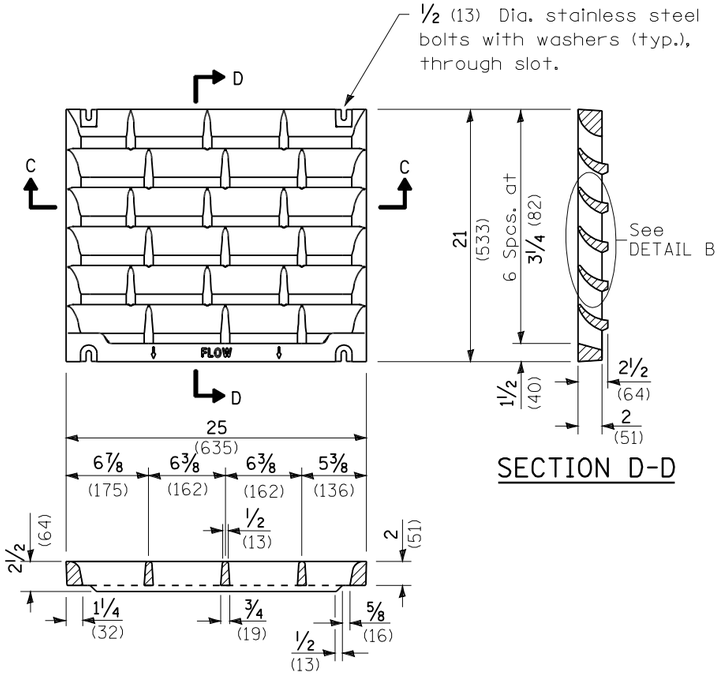

SECTION D-D

SECTION C-C

DETAIL OF CAST GRATE

Type B requires 1 grate
Type C requires 2 grates
Type D requires 3 grates

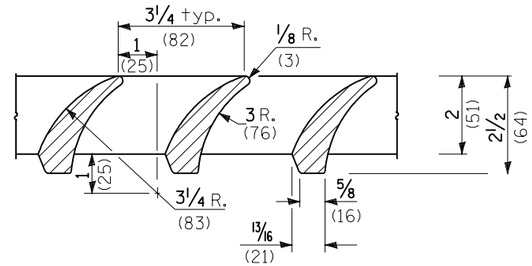

DETAIL B

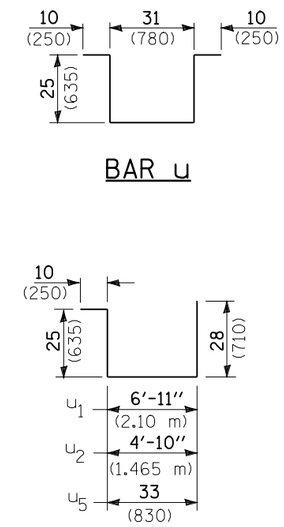

BAR u

BARS u_1,u_2&u_5

Bars u_3,u_4&u_6

INLET BOX

REQUIRED MATERIAL

TYPE B

Bar	Qty.	Size	Length
u	4	No. 4 (No.13)	8'-5" (2.550 m)
u_5	3	No. 4 (No.13)	8'-0" (2.425 m)
u_6	4	No. 4 (No.13)	6'-2" (1.870 m)
Concrete		cu. yds. (m^3)	0.5 (0.4)
Reinf. bars		lbs. kg	55.0 (25.0)
Grating		sq. ft. (m^2)	3.6 (0.34)

TYPE C

Bar	Qty.	Size	Length
u	6	No. 4 (No.13)	8'-5" (2.550 m)
u_2	3	No. 4 (No.13)	10'-1" (3.060 m)
u_4	4	No. 4 (No.13)	8'-4" (2.530 m)
Concrete		cu. yds. (m^3)	0.8 (0.6)
Reinf. bars		lbs. kg	76 (34.5)
Grating		sq. ft. (m^2)	7.3 (0.68)

TYPE D

Bar	Qty.	Size	Length
u	8	No. 4 (No.13)	8'-5" (2.550 m)
u_1	3	No. 4 (No.13)	12'-2" (3.695 m)
u_3	4	No. 4 (No.13)	10'-4" (3.150 m)
Concrete		cu. yds. (m^3)	1.1 (0.8)
Reinf. bars		lbs. kg	97.0 (44.0)
Grating		sq. ft. (m^2)	10.9 (1.02)

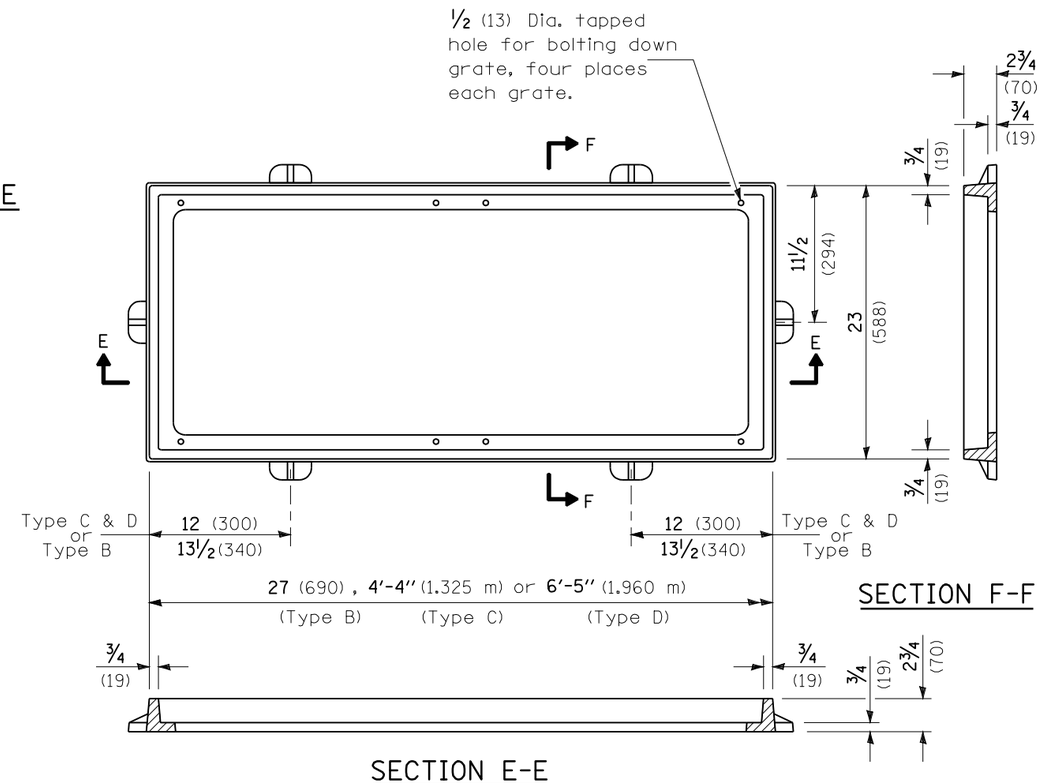

SECTION F-F

SECTION E-E

DETAIL OF CAST FRAME

(Type C shown)

Illinois Department of Transportation

PASSED January 1, 2010
ENGINEER OF POLICY AND PROCEDURES

APPROVED January 1, 2010
ENGINEER OF DESIGN AND ENVIRONMENT

ISSUED 1-1-97

BRIDGE APPROACH SHOULDER PAVEMENT AND DRAIN

(Sheet 2 of 2)

STANDARD 609001-05

* Type B, C, or D inlet box as required.

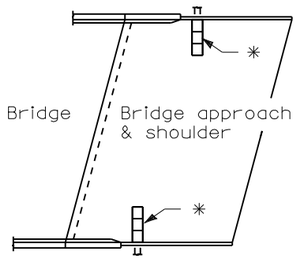

GENERAL PLAN

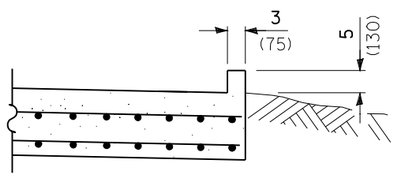

SECTION C-C

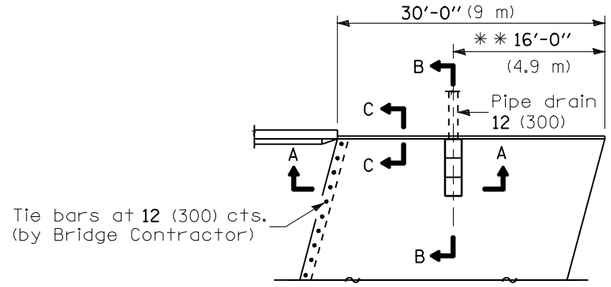

TYPICAL DETAIL PLAN

(W/O Wingwall)

** Vary this dimension as needed to position the Inlet Box and Pipe Drain between the proposed approach guardrail posts.

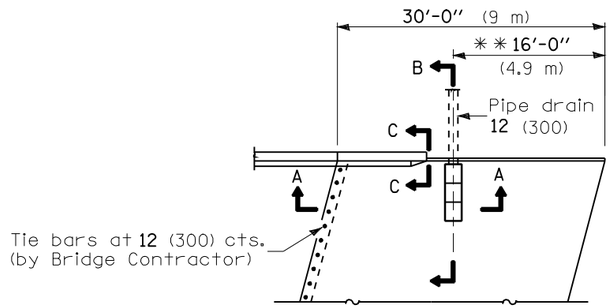

TYPICAL DETAIL PLAN

(With Wingwall)

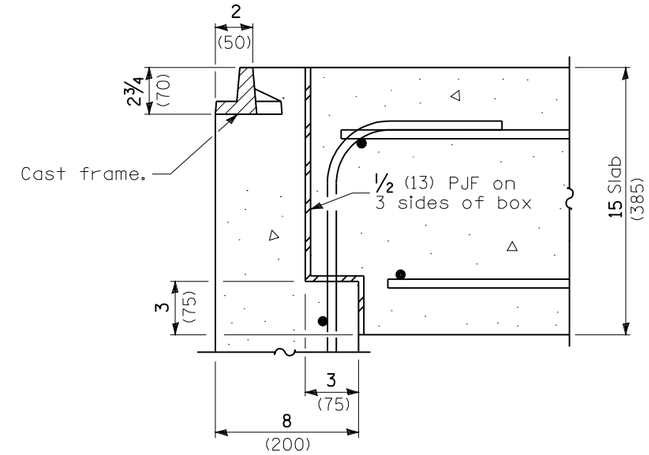

DETAIL A

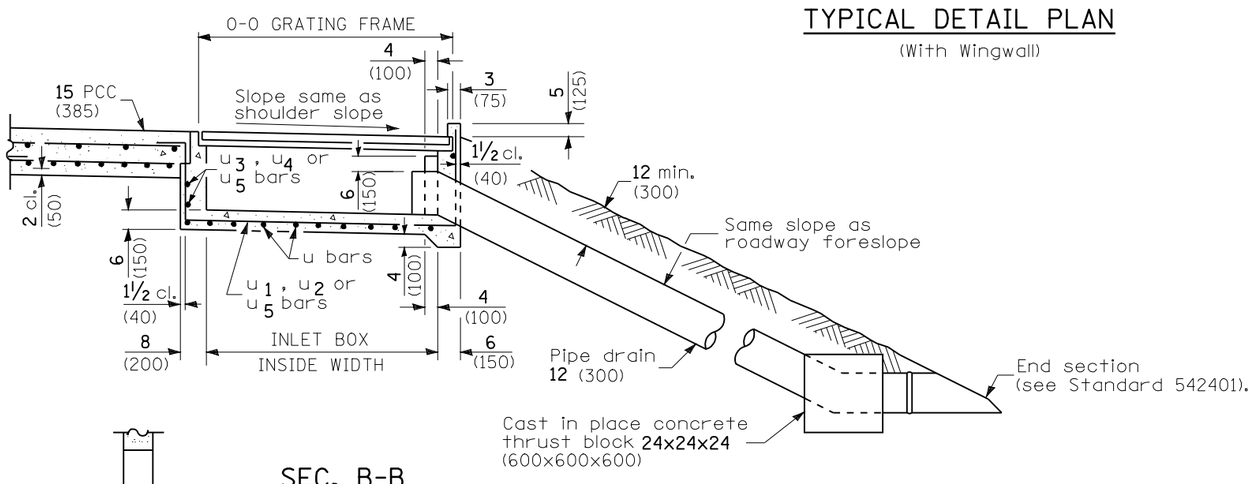

SEC. B-B

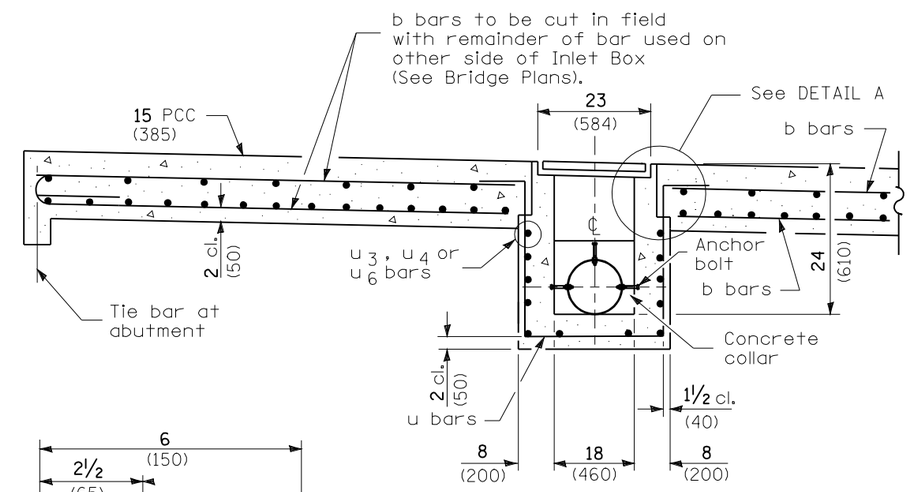

SECTION A-A

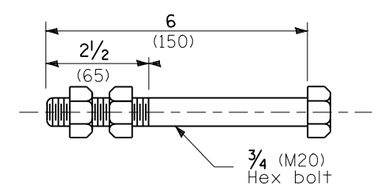

ANCHOR BOLT

(Used to tie pipe to concrete collar)

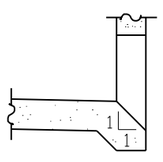

BOX OUTLET WHEN PRECAST

INLET TYPE	SHOULDER WIDTH	O-O GRATING FRAME	INLET BOX INSIDE WIDTH	INLET BOX INSIDE LENGTH
Type B	Less than 5' (1.5 m)	2'-3" (0.690 m)	1'-10" (0.560 m)	18 (460)
Type C	5' - 6' (1.5 m) (1.8 m)	4'-4" (1.325 m)	3'-11" (1.195 m)	18 (460)
Type D	Greater than 6' (1.8 m)	6'-5" (1.960 m)	6'-0" (1.830 m)	18 (460)

GENERAL NOTES

All exposed edges of the inlet, except the upper perimeter, shall be beveled 3/4 (20).

All dimensions are in inches (millimeters) unless otherwise shown.

Illinois Department of Transportation

PASSED January 1, 2010
ENGINEER OF POLICY AND PROCEDURES

APPROVED January 1, 2010
ENGINEER OF DESIGN AND ENVIRONMENT

ISSUED 1-1-97

DATE	REVISIONS
1-1-10	Added bolt-down to
	fr. & gr., omitted stl.
	frame. Mod. Sec. A-A.
1-1-09	Switched units to
	English (metric).

BRIDGE APPROACH PAVEMENT (DRAIN DETAIL)

(Sheet 1 of 2)

STANDARD 609006-05

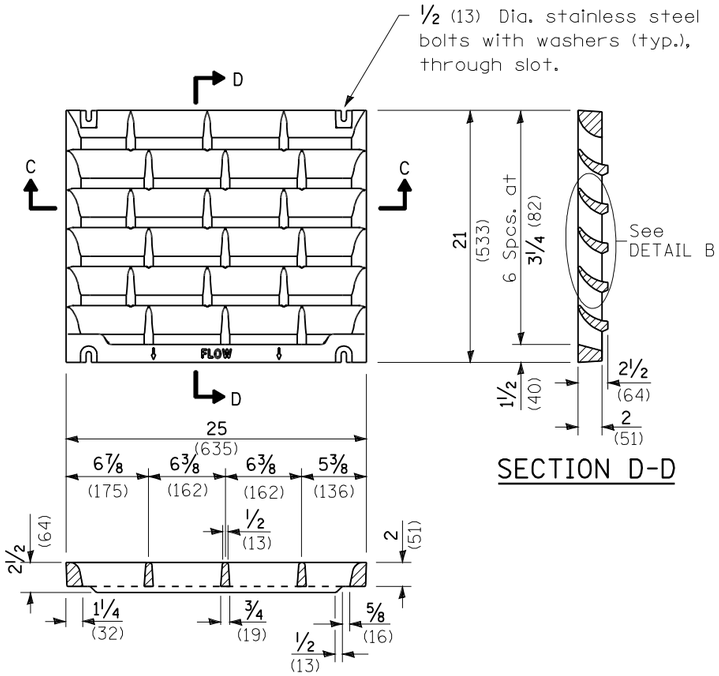

SECTION D-D

SECTION C-C

DETAIL OF CAST GRATE

Type B requires 1 grate
Type C requires 2 grates
Type D requires 3 grates

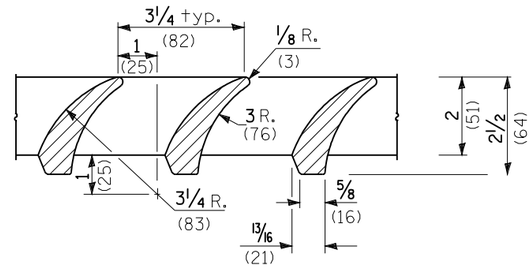

DETAIL B

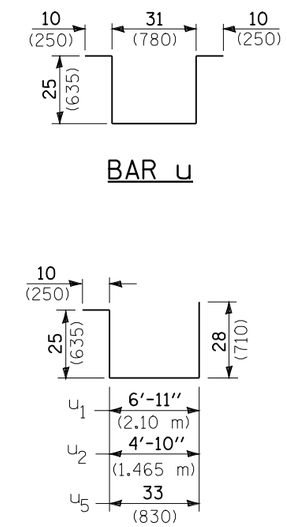

INLET BOX

REQUIRED MATERIAL

TYPE B

Bar	Qty.	Size	Length
u	4	No. 4 (No.13)	8'-5" (2.550 m)
u_5	3	No. 4 (No.13)	8'-0" (2.425 m)
u_6	4	No. 4 (No.13)	6'-2" (1.870 m)
Concrete		cu. yds. (m^3)	0.5 (0.4)
Reinf. bars		lbs. kg	55.0 (25.0)
Grating		sq. ft. (m^2)	3.6 (0.34)

TYPE C

Bar	Qty.	Size	Length
u	6	No. 4 (No.13)	8'-5" (2.550 m)
u_2	3	No. 4 (No.13)	10'-1" (3.060 m)
u_4	4	No. 4 (No.13)	8'-4" (2.530 m)
Concrete		cu. yds. (m^3)	0.8 (0.6)
Reinf. bars		lbs. kg	76 (34.5)
Grating		sq. ft. (m^2)	7.3 (0.68)

TYPE D

Bar	Qty.	Size	Length
u	8	No. 4 (No.13)	8'-5" (2.550 m)
u_1	3	No. 4 (No.13)	12'-2" (3.695 m)
u_3	4	No. 4 (No.13)	10'-4" (3.150 m)
Concrete		cu. yds. (m^3)	1.1 (0.8)
Reinf. bars		lbs. kg	97.0 (44.0)
Grating		sq. ft. (m^2)	10.9 (1.02)

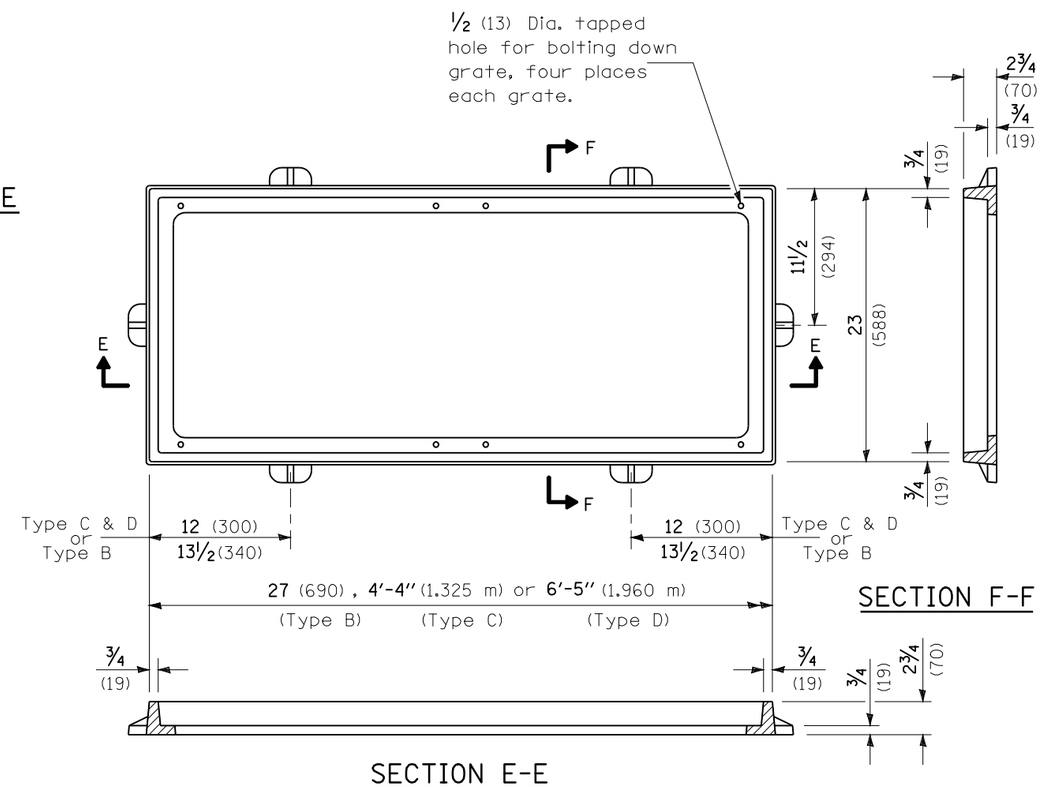

SECTION F-F

SECTION E-E

DETAIL OF CAST FRAME
(Type C shown)

Illinois Department of Transportation

PASSED January 1, 2010
ENGINEER OF POLICY AND PROCEDURES
APPROVED January 1, 2010
ENGINEER OF DESIGN AND ENVIRONMENT

ISSUED 1-1-97

BRIDGE APPROACH PAVEMENT (DRAIN DETAIL)

(Sheet 2 of 2)

STANDARD 609006–05

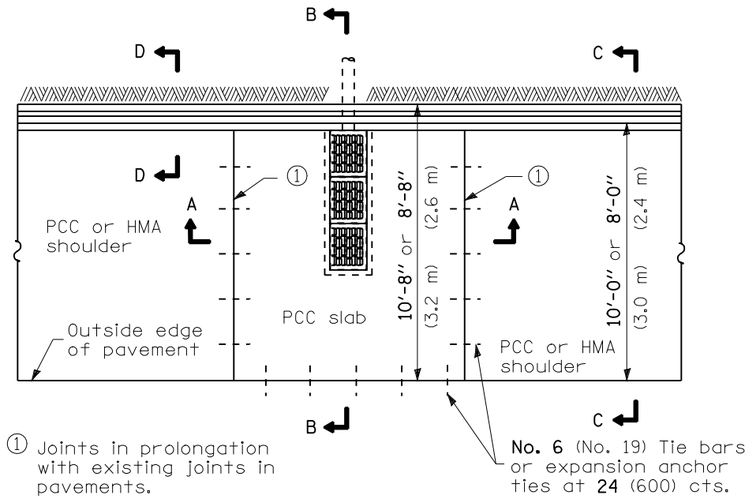

PLAN

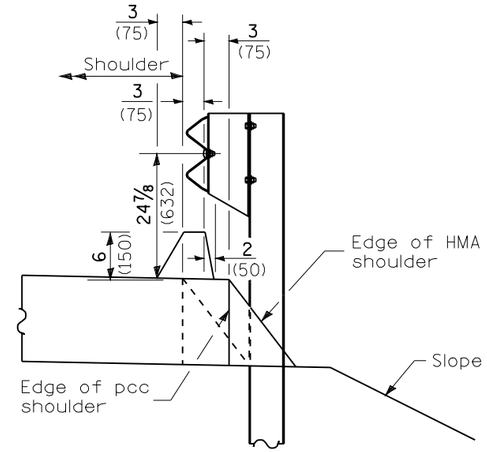

DETAIL B

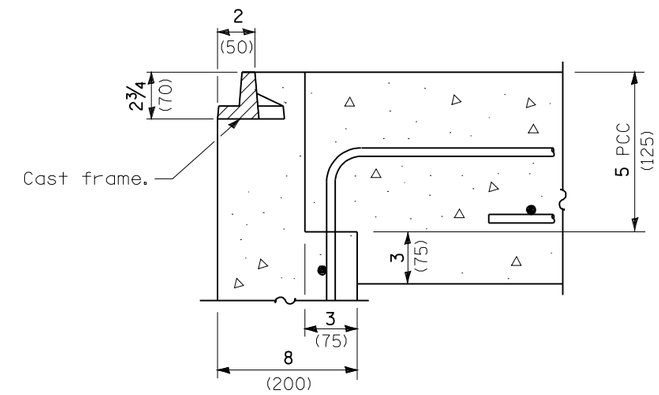

DETAIL A

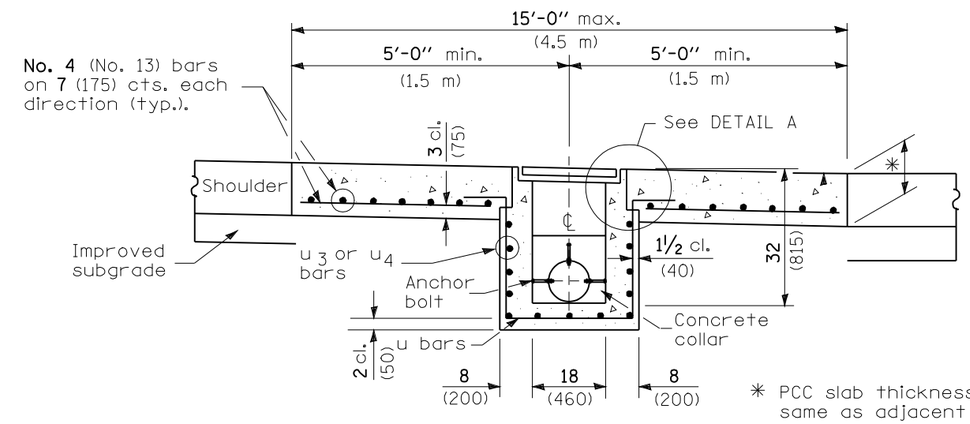

SEC. A-A

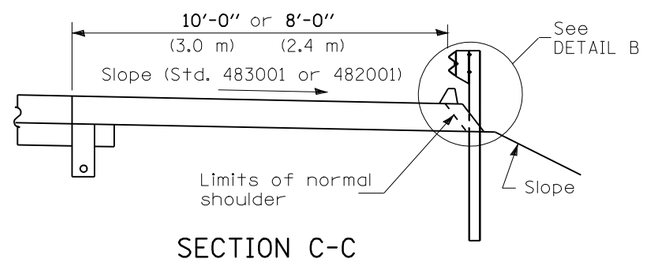

SECTION C-C

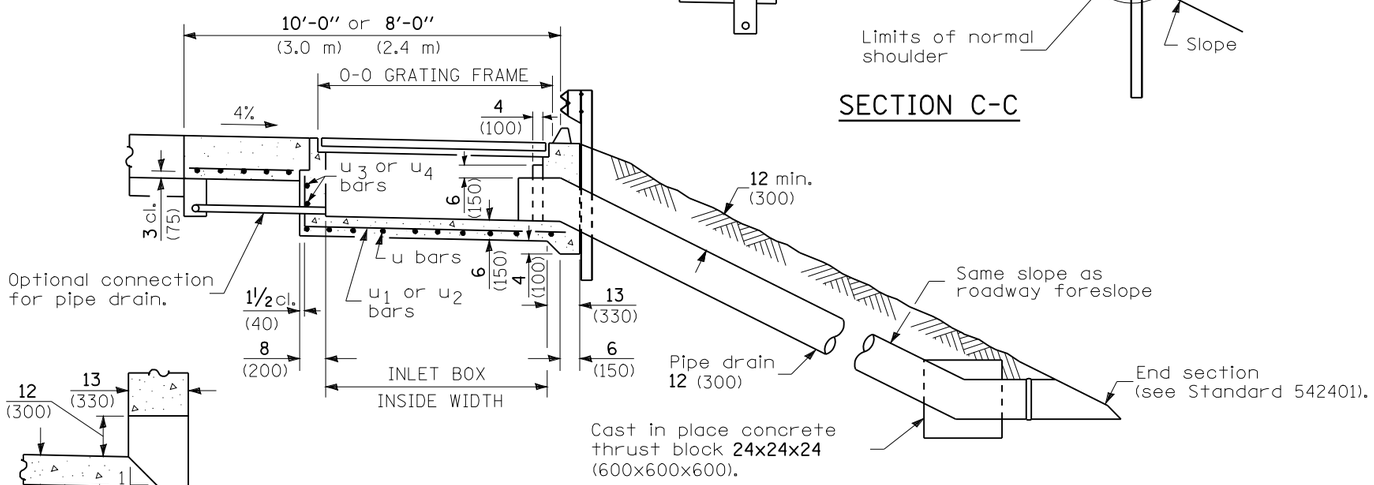

SEC. B-B

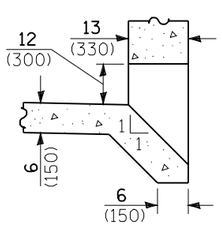

BOX OUTLET WHEN PRECAST

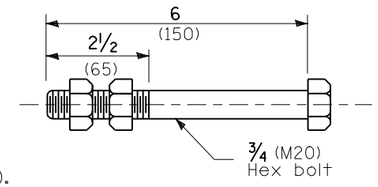

ANCHOR BOLT

(Used to tie pipe to concrete collar)

GENERAL NOTES

See Standard 420001 for joint details not shown.

All exposed edges of the inlet, except the upper perimeter, shall be beveled 3/4 (20).

For placement of drainage elements on existing construction with existing rigid pavement, substitute expansion anchor ties for tie bars. For nonrigid pavements or monolithic construction of pcc slab and shoulder, omit tie bars.

Alldiminsions are in inches (millimeters) unless otherwise shown.

INLET TYPE	SHOULDER WIDTH	O-O GRATING FRAME	INLET BOX INSIDE WIDTH	INLET BOX INSIDE LENGTH
Type E	8' (2.4 m)	4'-4" (1.325 m)	3'-11" (1.195 m)	18 (460)
Type F	10' (3.0 m)	6'-5" (1.960 m)	6'-0" (1.830 m)	18 (460)

DATE	REVISIONS
1-1-10	Added bolt-down to
	frame & grate. Omitted
	steel frame.
1-1-09	Switched units to
	English (metric). Changed
	Det. B to MWG Sys.

SHOULDER INLET WITH CURB

(Sheet 1 of 2)

STANDARD 610001-05

Illinois Department of Transportation

PASSED January 1, 2010
ENGINEER OF POLICY AND PROCEDURES
APPROVED January 1, 2010
ENGINEER OF DESIGN AND ENVIRONMENT

ISSUED 1-1-97

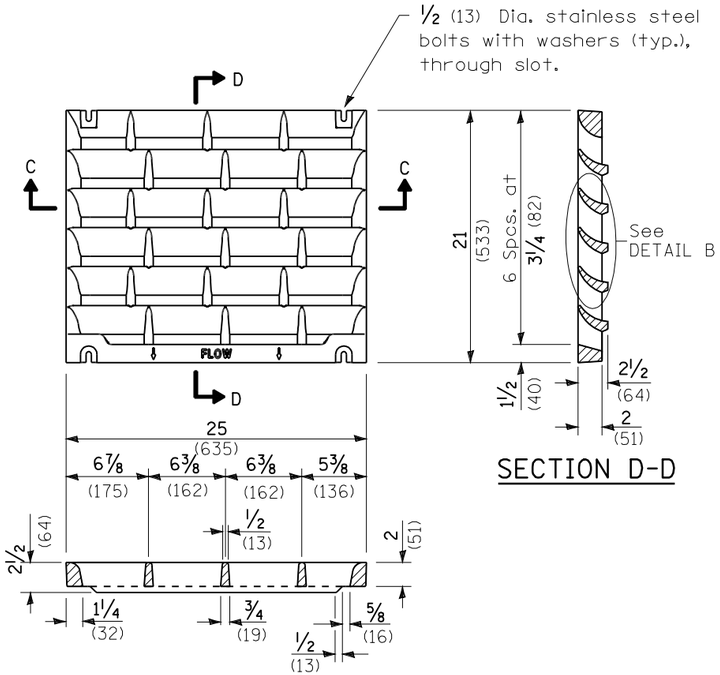

SECTION D-D

SECTION C-C

DETAIL OF CAST GRATE

Type B requires 1 grate
Type C requires 2 grates
Type D requires 3 grates

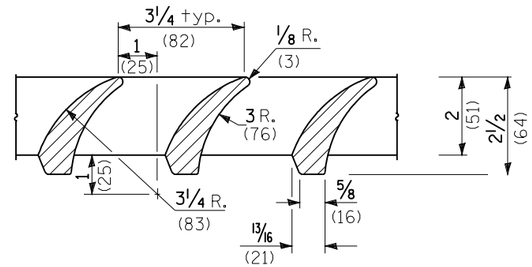

DETAIL B

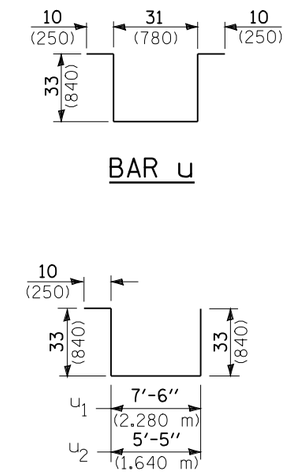

BAR u

BARS u_1,u_2

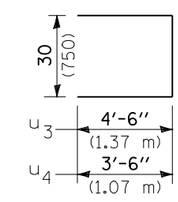

Bars u_3,u_4

INLET BOX

REQUIRED MATERIAL			
TYPE F			
Bar	Qty.	Size	Length
u	8	No. 4 (No. 13)	9'-9" (2.96 m)
u_1	3	No. 4 (No. 13)	13'-10" (4.21 m)
u_3	6	No. 4 (No. 13)	11'-6" (3.49 m)
Concrete		cu. yds. (m^3)	1.7 (1.3)
Reinf. bars		lbs. (kg)	126 (57.2)
Grating		sq. ft. (m^2)	10.9 (1.02)
TYPE E			
Bar	Qty.	Size	Length
u	6	No. 4 (No. 13)	9'-9" (2.96 m)
u_2	3	No. 4 (No. 13)	11'-9" (3.57 m)
u_4	6	No. 4 (No. 13)	9'-6" (2.89 m)
Concrete		cu. yds. (m^3)	1.3 (1.0)
Reinf. bars		lbs. (kg)	101 (45.8)
Grating		sq. ft. (m^2)	7.3 (0.68)

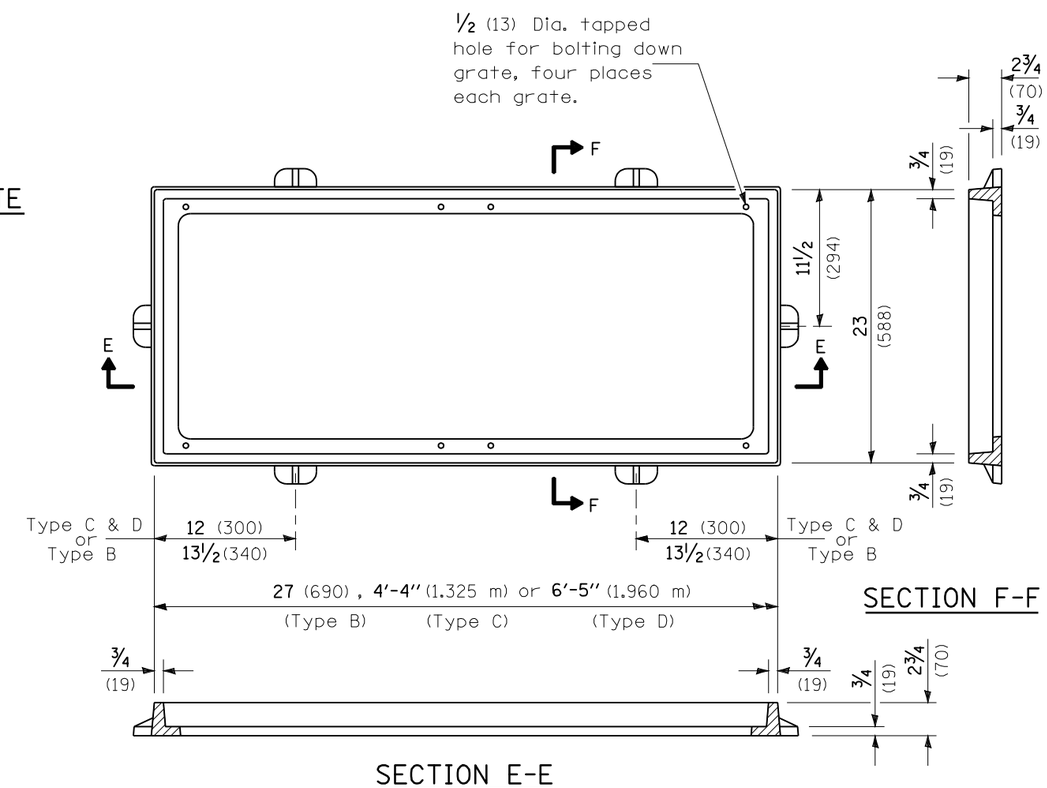

SECTION F-F

SECTION E-E

DETAIL OF CAST FRAME
(Type C shown)

Illinois Department of Transportation

PASSED January 1, 2010
ENGINEER OF POLICY AND PROCEDURES
APPROVED January 1, 2010
ENGINEER OF DESIGN AND ENVIRONMENT

ISSUED 1-1-97

SHOULDER INLET WITH CURB

(Sheet 2 of 2)

STANDARD 610001-05

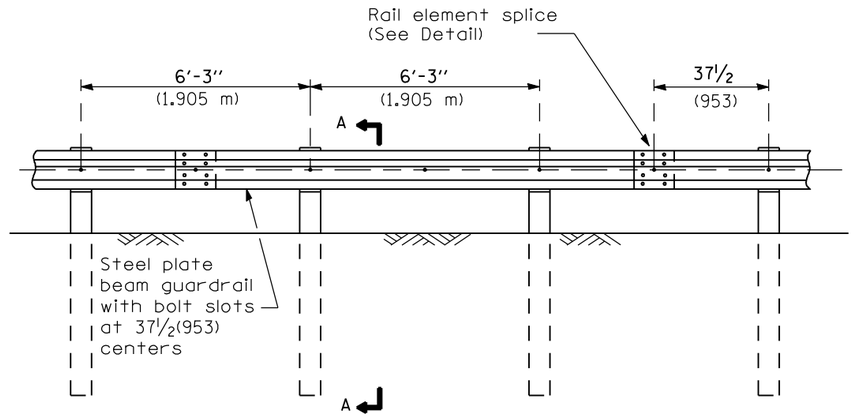

ELEVATION

TYPE A

6'-3" (1.905 m) Typical post spacing

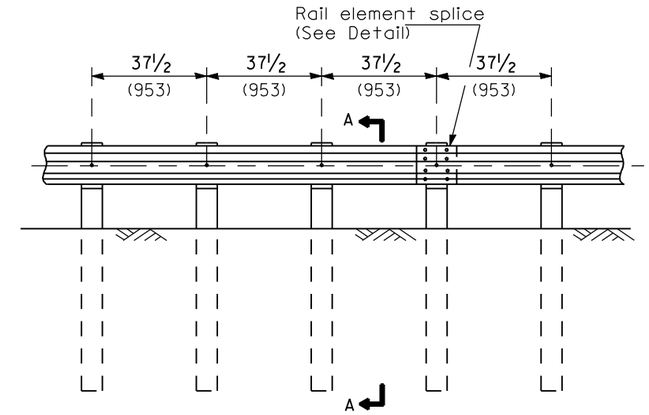

ELEVATION

TYPE B

37½ (953) Closed post spacing

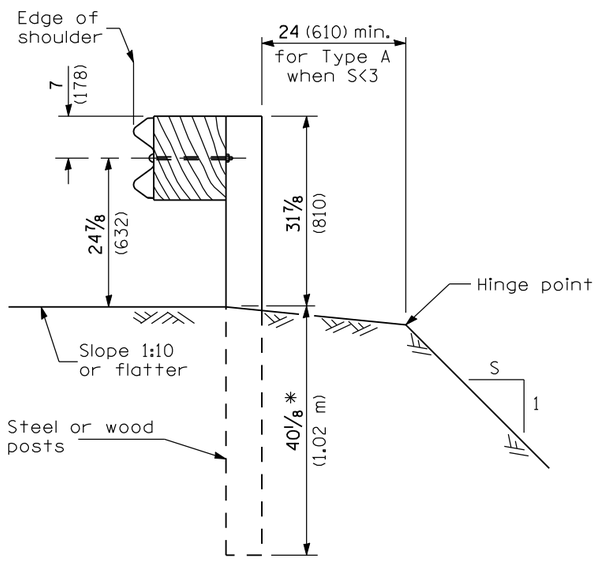

SECTION A-A

* When "S" is less than 3 and the distance from the back of post is less than 24 (610), the post embedment shall be 76⅛ (1934).

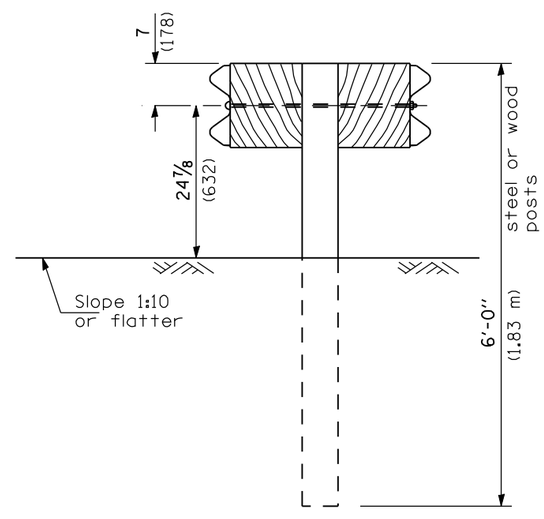

SECTION B-B

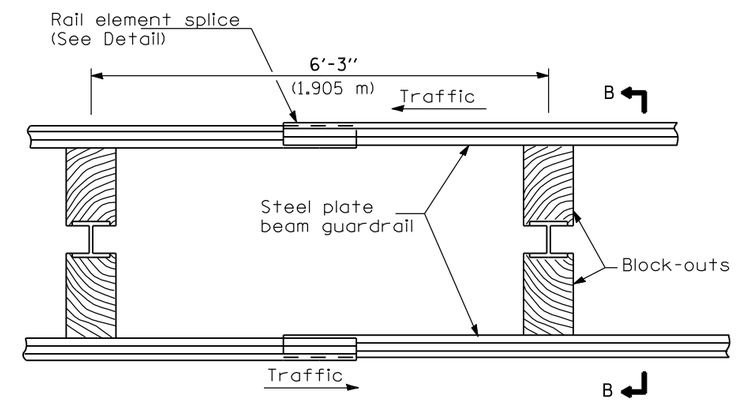

PLAN

TYPE D

Double steel plate beam guardrail
6'-3" (1.905 m) typical post spacing

GENERAL NOTES

All slope ratios are expressed as units of vertical displacement to units of horizontal displacement (V:H).

All dimensions are in inches (millimeters) unless otherwise shown.

Illinois Department of Transportation

PASSED January 1, 2009
ENGINEER OF POLICY AND PROCEDURES
APPROVED January 1, 2009
ENGINEER OF DESIGN AND ENVIRONMENT

ISSUED 1-1-97

DATE	REVISIONS
1-1-09	Sw'd units to Eng. (met.)
	Mod. Steel Post Detail &
	G.R. Behind Curb Detail.
1-1-07	Changes adopted to
	implement the Midwest
	Guardrail System.

STEEL PLATE BEAM GUARDRAIL

(Sheet 1 of 4)

STANDARD 630001-08

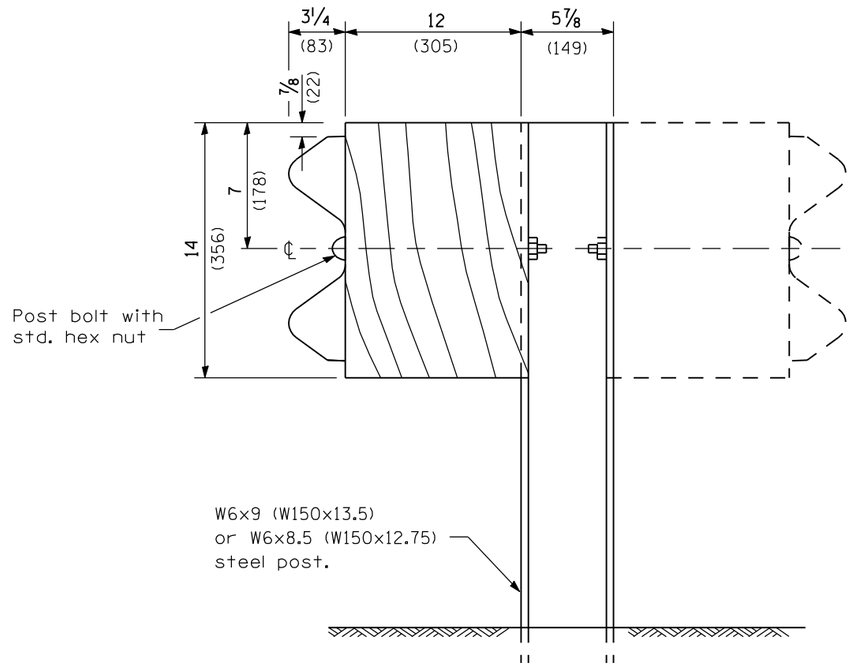

STEEL POST CONSTRUCTION

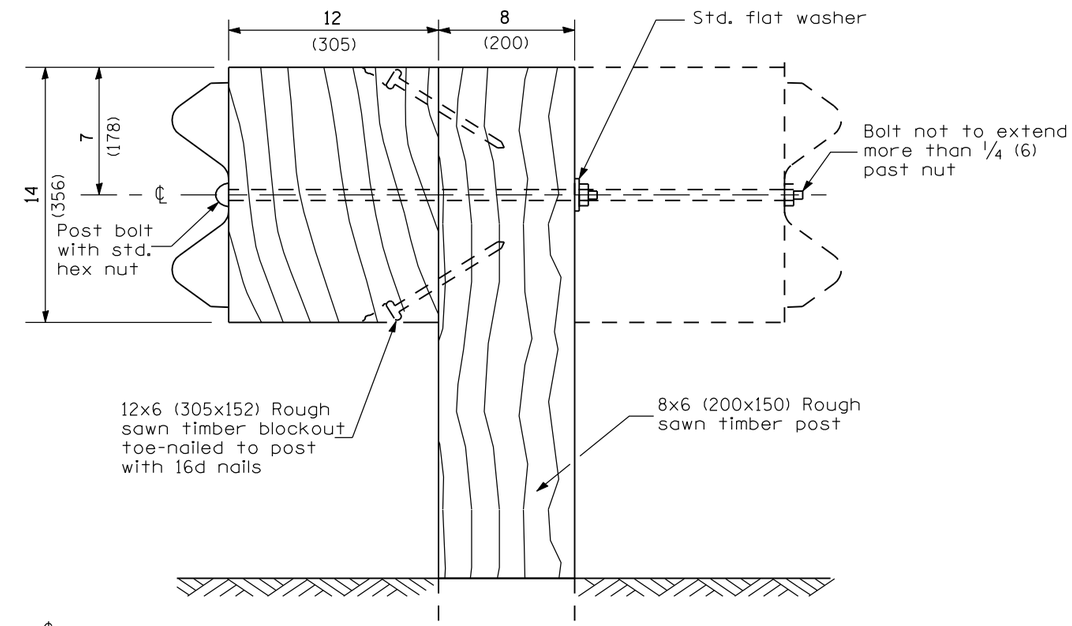

WOOD POST CONSTRUCTION

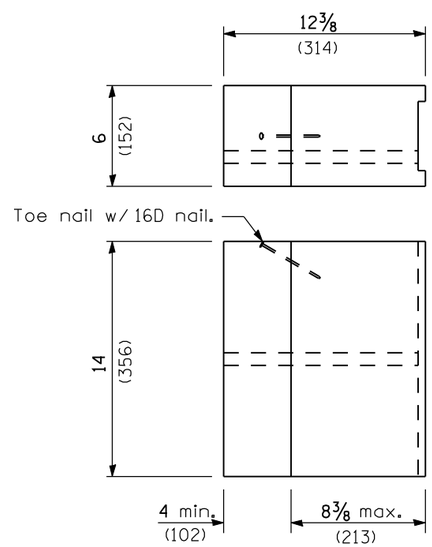

TWO-PIECE WOOD
BLOCKOUT OPTION

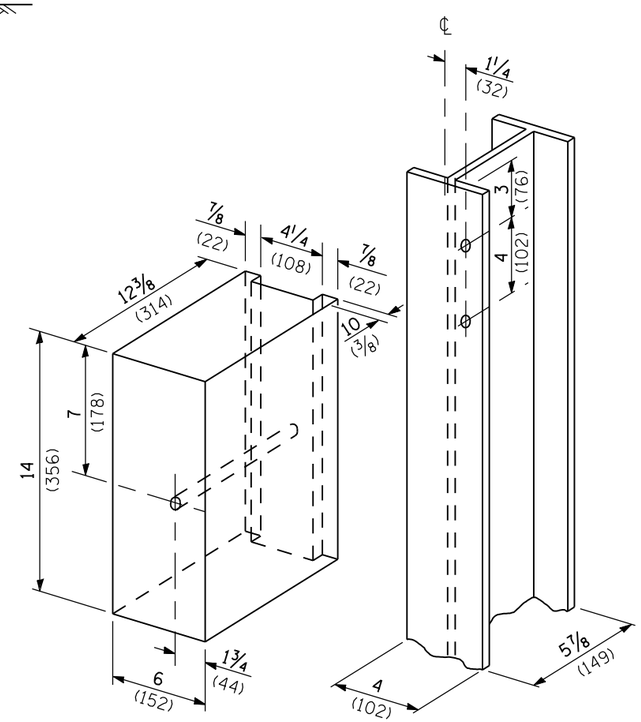

Note:
All holes ¾ (20) dia.

WOOD BLOCK-OUT AND
STEEL POST DETAILS

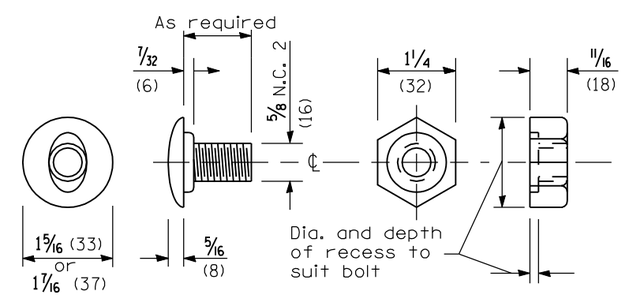

POST OR SPLICE BOLT & NUT

Illinois Department of Transportation

PASSED January 1, 2009
ENGINEER OF POLICY AND PROCEDURES
APPROVED January 1, 2009
ENGINEER OF DESIGN AND ENVIRONMENT

ISSUED 1-1-97

STEEL PLATE BEAM
GUARDRAIL
(Sheet 2 of 4)

STANDARD 630001–07

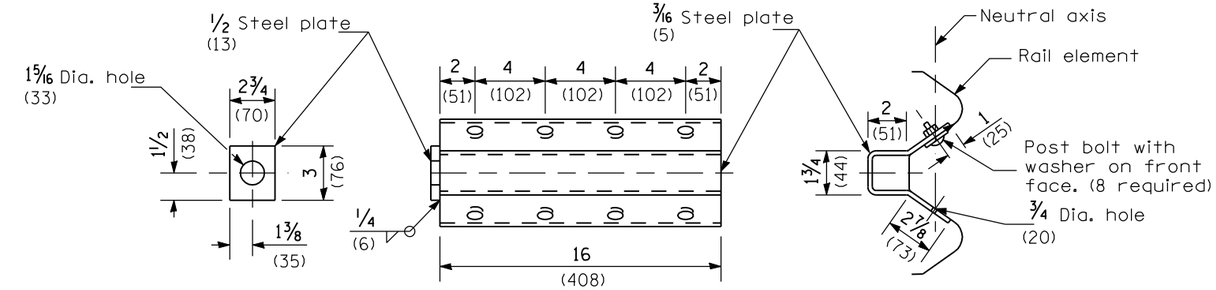

NOTE

Anchor plate T shall be used to attach cable assembly to guardrail when required on traffic barrier terminals.

ANCHOR PLATE T DETAILS

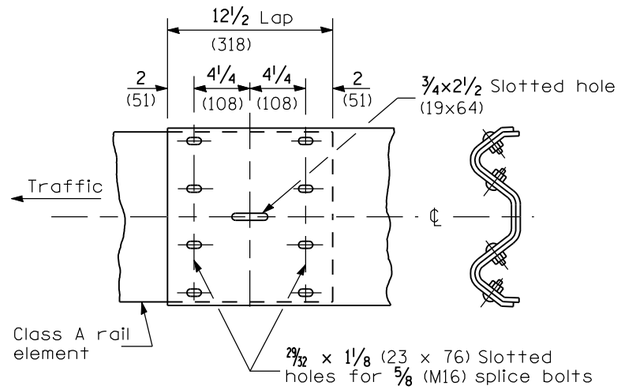

RAIL ELEMENT SPLICE

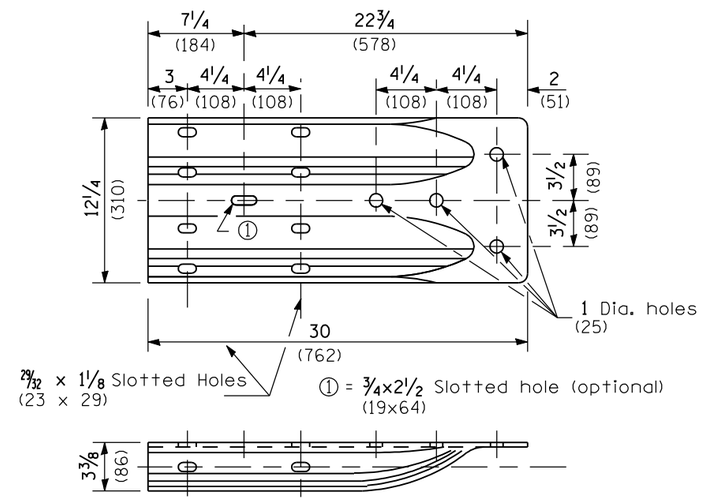

ALTERNATE END SHOE

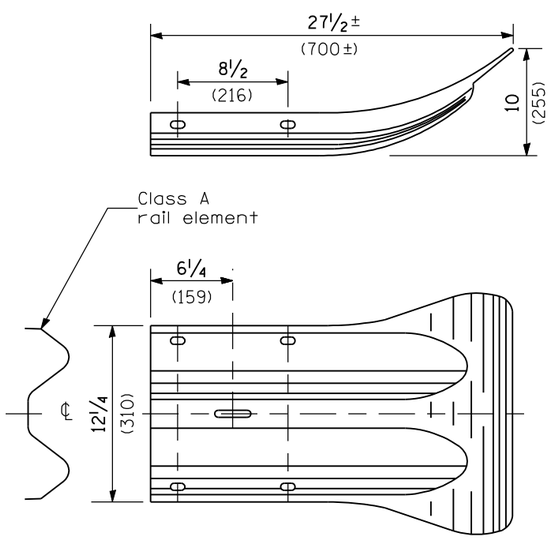

END SECTION

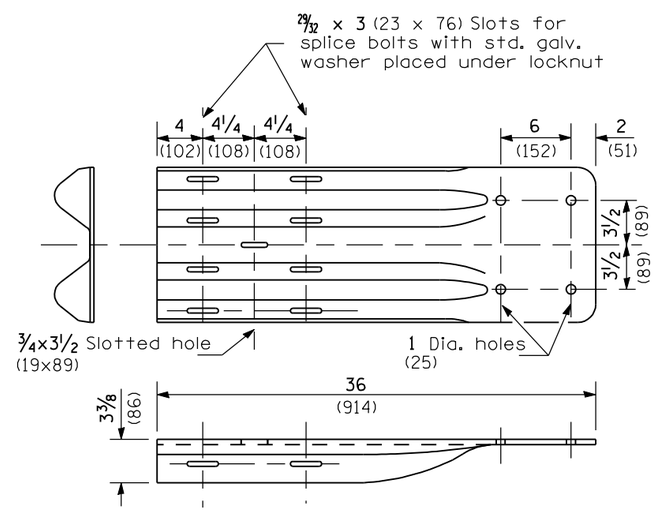

NOTE

When end shoe is attached to a bridge parapet which has an expansion joint, the bolts shall be provided with a locknut or double nut and shall be tightened only to a point that will allow guardrail movement.

The standard end shoe shall be attached to the concrete with pre-drilled or self-drilling anchor bolts. The anchor cone shall be set flush with the surface of the concrete.

Externally threaded studs protruding from the surface of the concrete will not be permitted.

END SHOE

Illinois Department of Transportation

PASSED January 1, 2009
ENGINEER OF POLICY AND PROCEDURES
APPROVED January 1, 2009
ENGINEER OF DESIGN AND ENVIRONMENT

ISSUED 1-1-97

STEEL PLATE BEAM GUARDRAIL

(Sheet 3 of 4)

STANDARD 630001-08

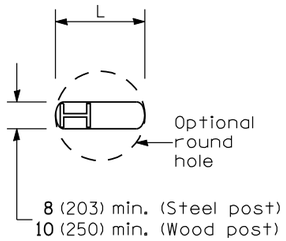

PLAN

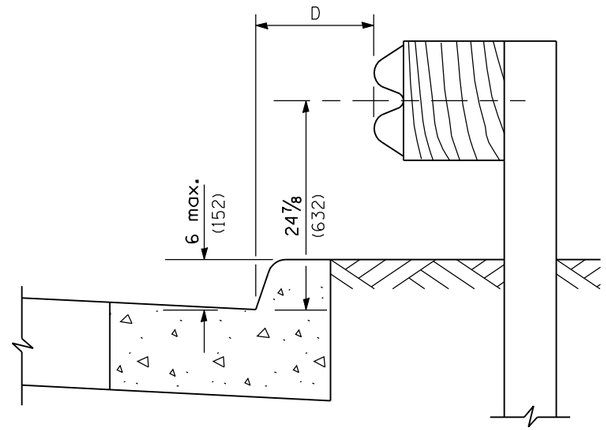

0 ≤ D < 4'-0" (1.2 m)

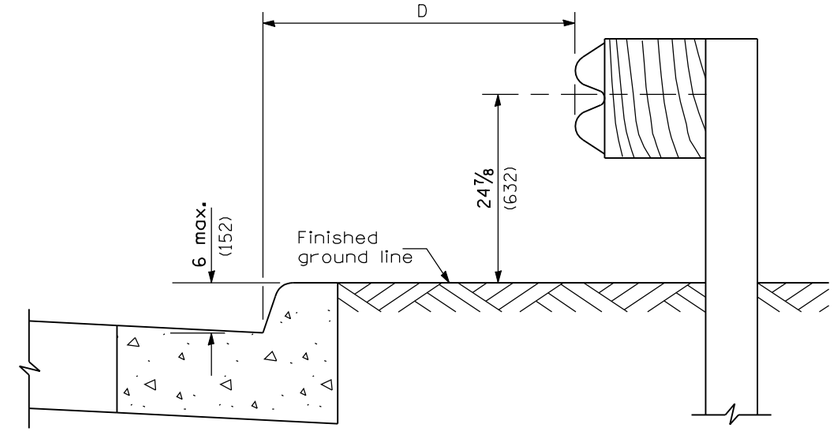

4'-0" (1.2 m) ≤ D ≤ 8'-0" (2.4 m)

GUARDRAIL PLACED BEHIND CURB

Note: The prefered dimension of D is 6 (152).

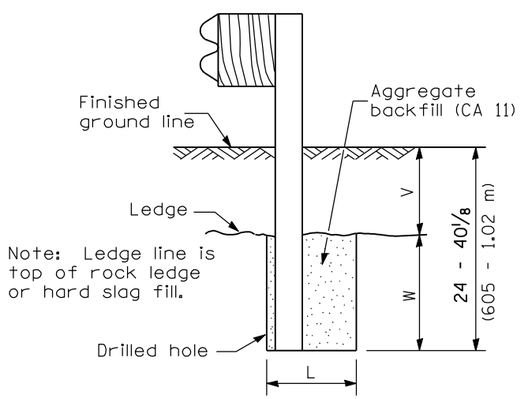

ELEVATION

FOOTING FOR POST WHEN IMPERVIOUS MATERIAL IS ENCOUNTERED

V	W	L	
		Steel Post	Wood Post
0 - 16 1/8 (0 - 410)	24 (610)	21 (530)	23 (580)
> 16 1/8 - 28 1/8 (> 410 - 714)	12 (305)	8 (203)	10 (250)
> 28 1/8 - 40 1/8 (> 714 - 1.02 m)	12 - 0 (305 - 0)	8 (203)	10 (250)

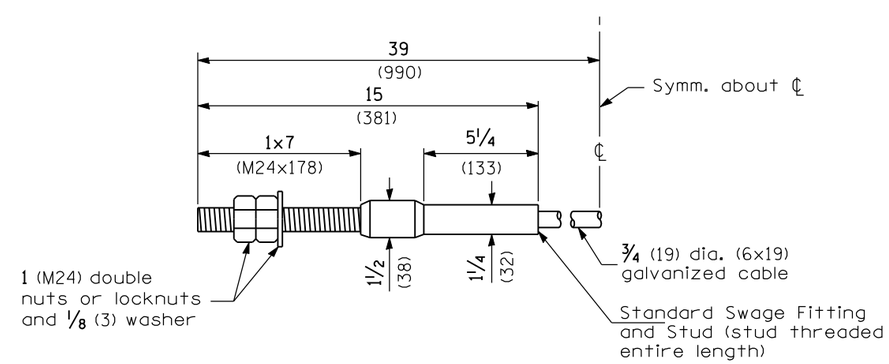

CABLE ASSEMBLY

(40,000 lbs. (18,100 kg) min. breaking strength)
Tighten to taut tension.

Illinois Department of Transportation

PASSED January 1, 2009
ENGINEER OF POLICY AND PROCEDURES
APPROVED January 1, 2009
ENGINEER OF DESIGN AND ENVIRONMENT

ISSUED 1-1-97

STEEL PLATE BEAM GUARDRAIL

(Sheet 4 of 4)

STANDARD 630001-08

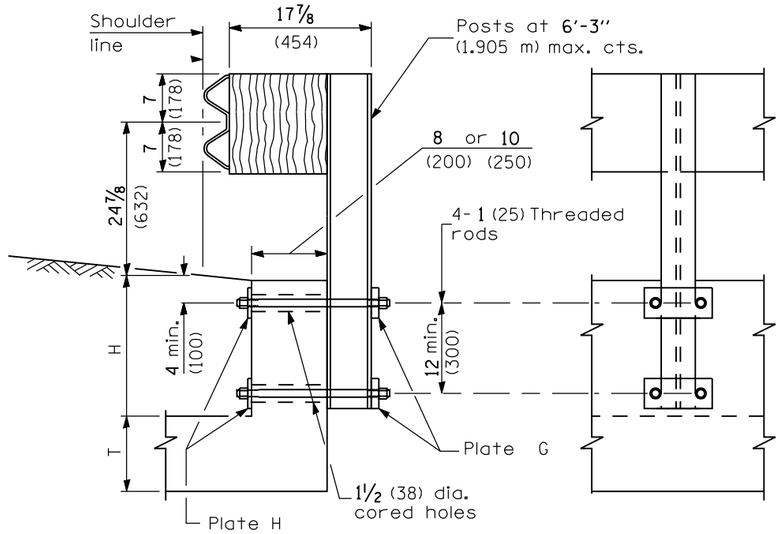

CROSS SECTION ELEVATION

CONDITION H > 18 (450)

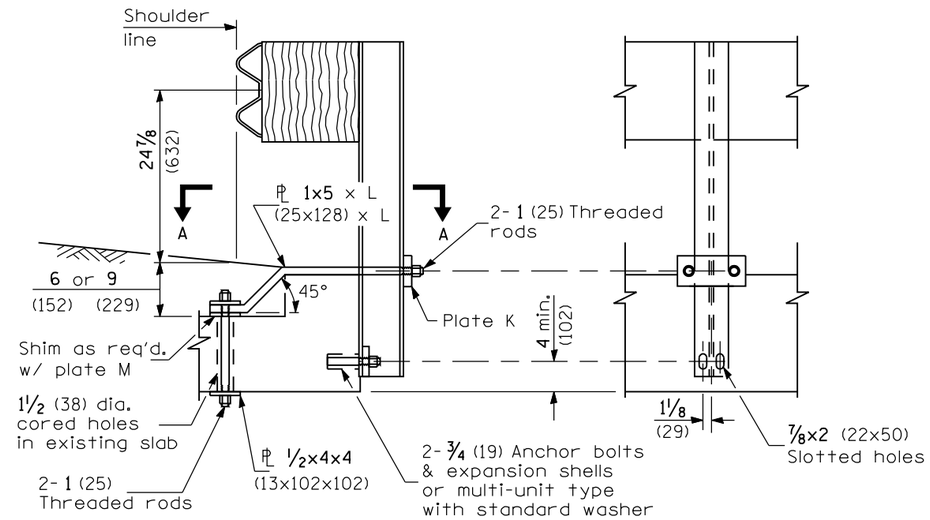

CROSS SECTION ELEVATION

CASE II
MOUNTED ON TOP HEADWALL
WITH SQUARE TIP

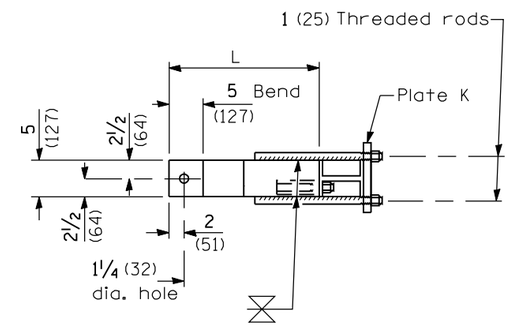

SECTION A-A

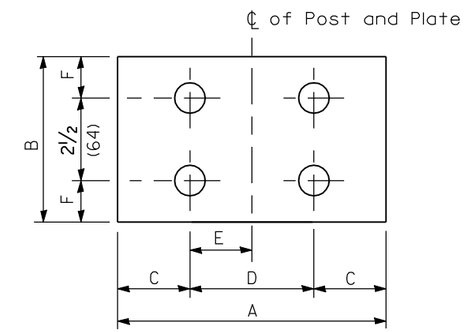

PLATE J

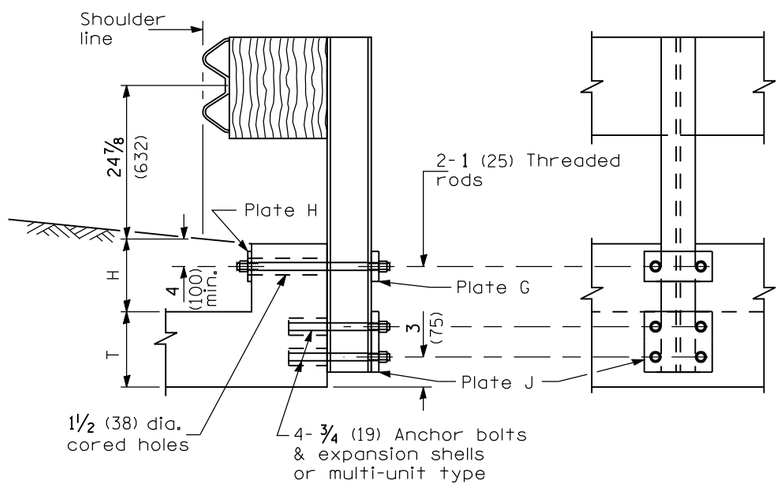

CROSS SECTION ELEVATION

CONDITION H < 18 (450) & H+T ≥ 20 (510)

CASE I
MOUNTED ON
RAISED HEADWALL

PLATE DIMENSIONS								
Type	A	B	C	D	E	F	Hole Dia.	Thick-ness
G	9 (230)	4 (100)	1 1/2 (40)	6 (150)	3 (75)	2 (50)	1 1/8 (29)	1 (25)
H	9 (230)	4 (100)	1 1/2 (40)	6 (150)	3 (75)	2 (50)	1 1/8 (29)	1/2 (13)
J	9 (230)	5 (127)	1 1/2 (40)	6 (150)	3 (75)	1 1/4 (32)	7/8 (22)	1 (25)
K	9 (230)	4 (100)	1 1/2 (40)	6 (150)	3 (75)	2 (50)	1 1/8 (29)	1 1/4 (32)
M	4 (100)	4 (100)	2 (50)	N/A	N/A	2 (50)	1 1/4 (32)	1/2 (13)

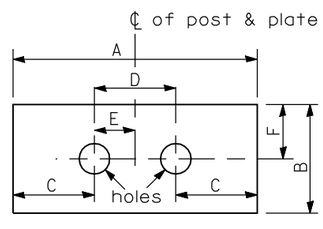

PLATES G, H & K

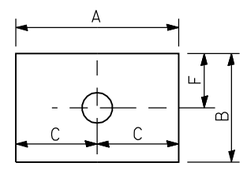

PLATE M

GENERAL NOTES

Except as noted, dimensions and notes specified for cases II, III, and IV are the same as specified for case I.

For details of guardrail elements not shown, see Standard 630001.

All threaded rods shall be installed with heavy hex nuts and standard washers.

All dimensions are in inches (millimeters) unless otherwise shown.

Illinois Department of Transportation

PASSED January 1, 2009
ENGINEER OF POLICY AND PROCEDURES
APPROVED January 1, 2009
ENGINEER OF DESIGN AND ENVIRONMENT

ISSUED 1-1-97

DATE	REVISIONS
1-1-09	Switched units to English (metric). Added fillet weld to Case IV.
1-1-07	Changes adopted to implement the Midwest Guardrail System.

GUARDRAIL MOUNTED ON EXISTING CULVERTS

(Sheet 1 of 2)

STANDARD 630101-08

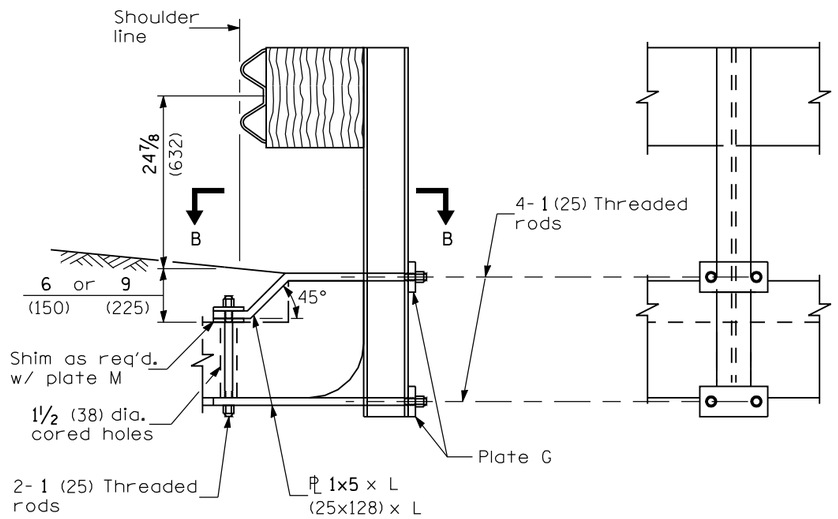

CROSS SECTION

ELEVATION

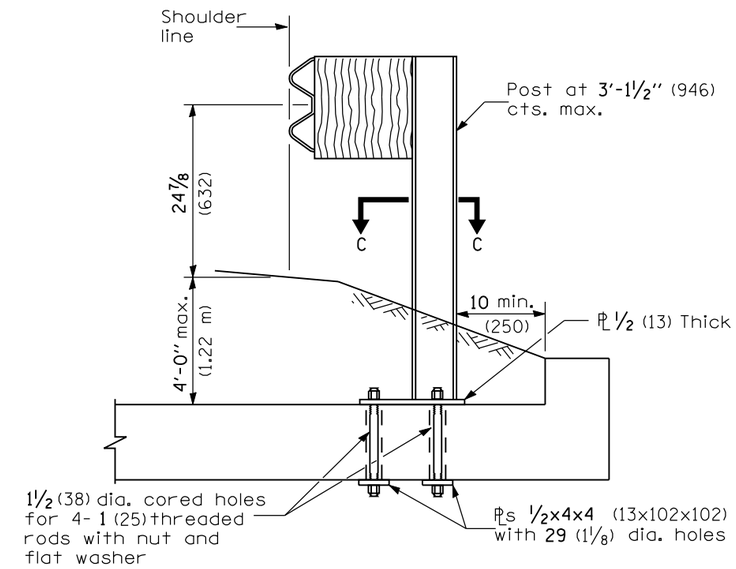

CROSS SECTION

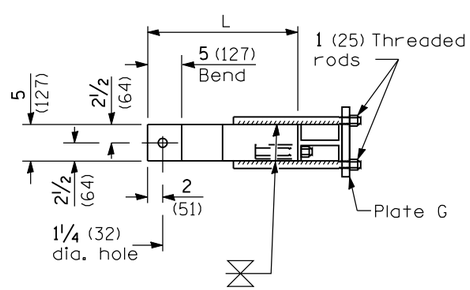

SECTION B-B

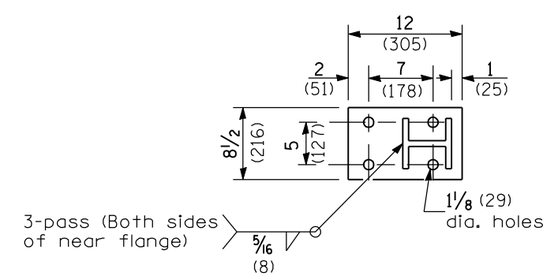

SECTION C-C

CASE III
MOUNTED ON HEADWALL
WITH CURVED OR DEMOLISHED TIP

CASE IV
MOUNTED ON SLAB

Illinois Department of Transportation

PASSED January 1, 2009
ENGINEER OF POLICY AND PROCEDURES
APPROVED January 1, 2009
ENGINEER OF DESIGN AND ENVIRONMENT

ISSUED 1-1-97

GUARDRAIL MOUNTED ON EXISTING CULVERTS

(Sheet 2 of 2)

STANDARD 630101–08

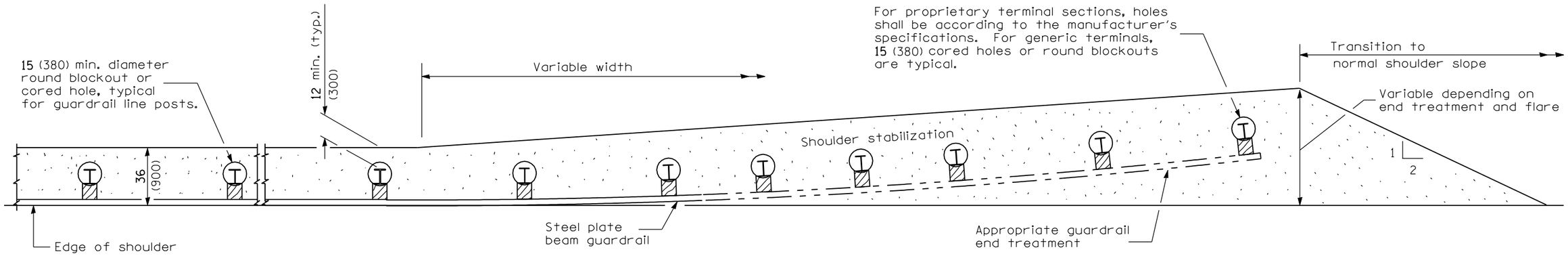

PLAN

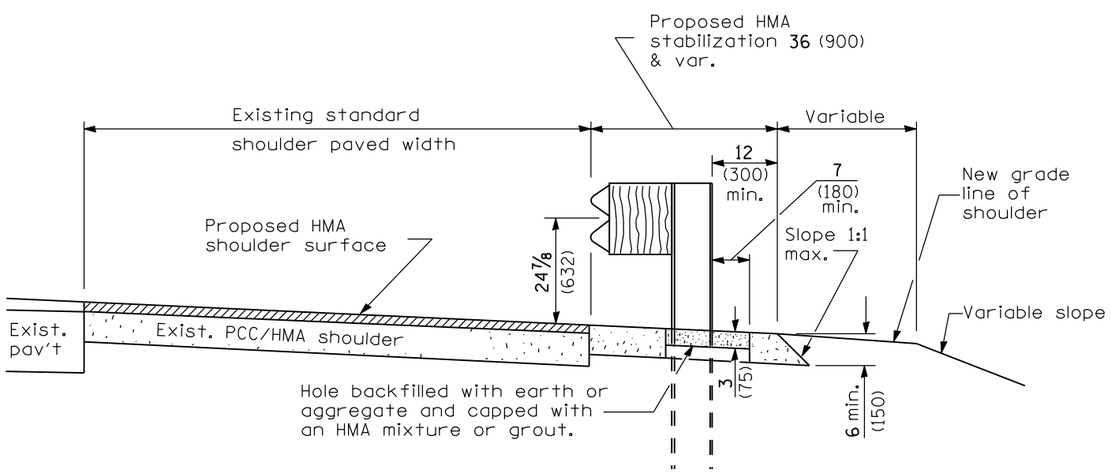

RESURFACING

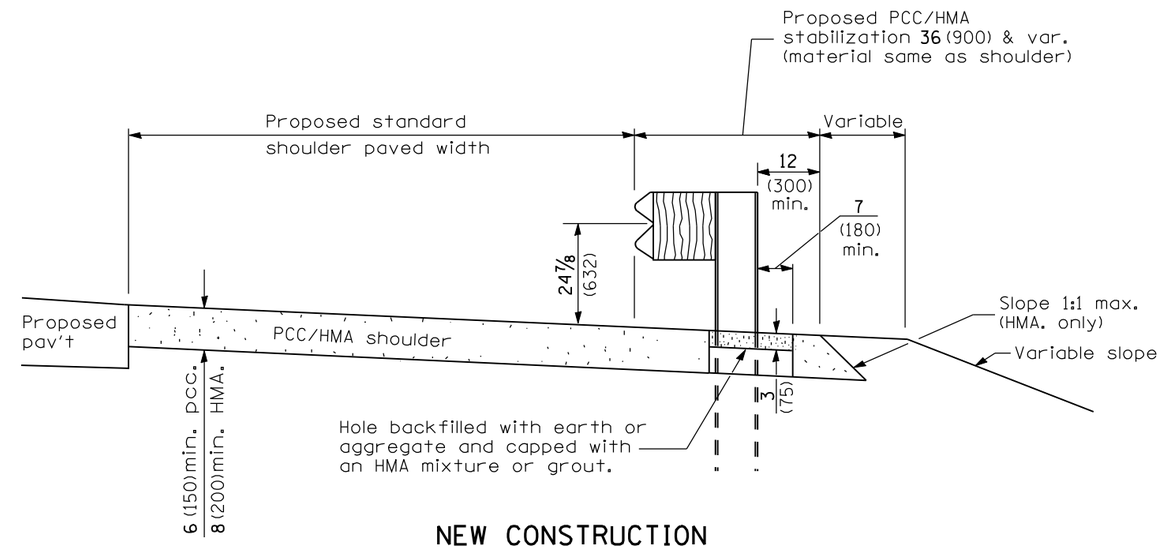

NEW CONSTRUCTION

GENERAL NOTES

See Standard 482001, 482006, or 483001 for details not shown.

All dimensions are in inches (millimeters) unless otherwise shown.

Illinois Department of Transportation

PASSED January 1, 2009
ENGINEER OF POLICY AND PROCEDURES

APPROVED January 1, 2009
ENGINEER OF DESIGN AND ENVIRONMENT

ISSUED 1-1-97

DATE	REVISIONS
1-1-09	Switched units to
	English (metric).
1-1-08	Removed reference to
	"bituminous mixture or
	grout".

PCC/HMA STABILIZATION AT STEEL PLATE BEAM GUARDRAIL

STANDARD 630201-06

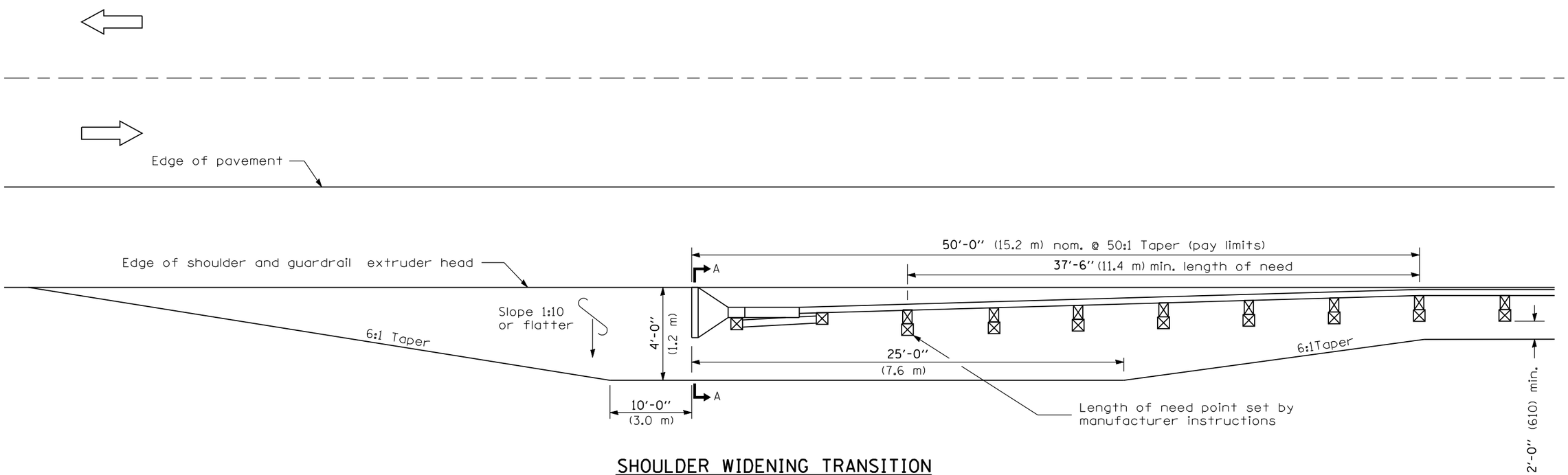

SHOULDER WIDENING TRANSITION FOR TANGENT TERMINAL

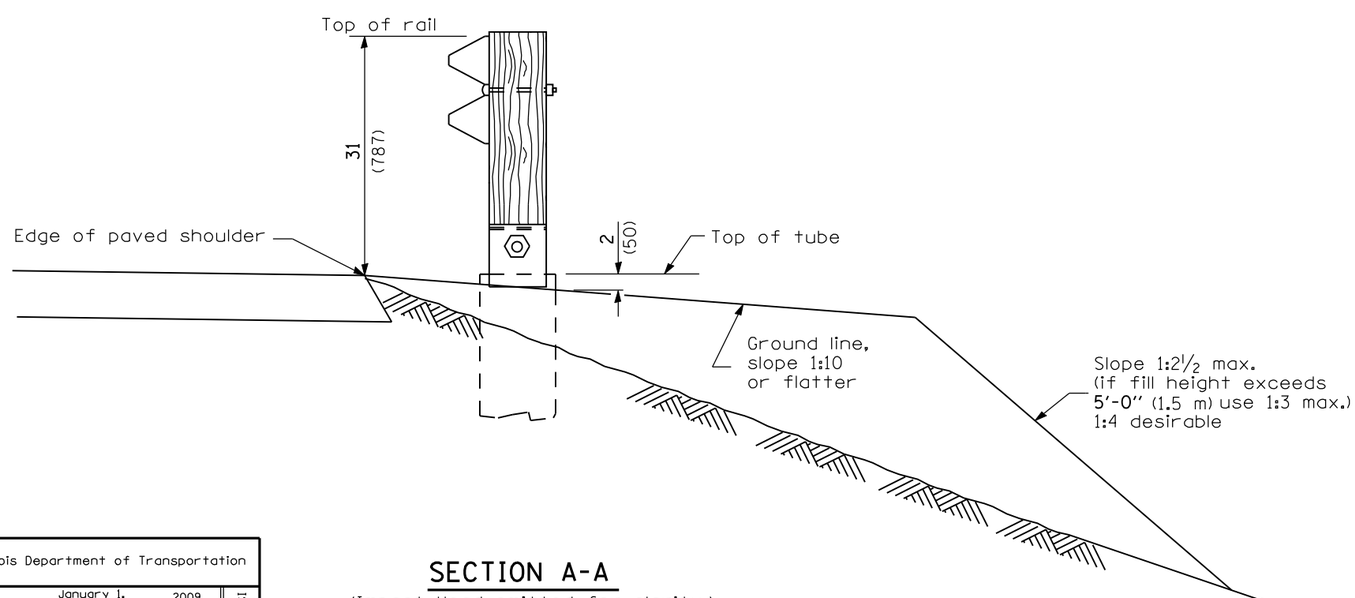

SECTION A-A

(Impact Head omitted for clarity.)

GENERAL NOTES

50:1 Taper required so the guardrail head will not encroach on the shoulder.

All slope ratios are expressed as units of vertical displacement to units of horizontal displacement (V:H).

All dimensions are in inches (millimeters) unless otherwise shown.

Illinois Department of Transportation

PASSED January 1, 2009
ENGINEER OF POLICY AND PROCEDURES

APPROVED January 1, 2009
ENGINEER OF DESIGN AND ENVIRONMENT

ISSUED 1-1-00

DATE	REVISIONS
1-1-09	Switched units to
	English (metric).
1-1-07	Changes adopted to
	implement the Midwest
	Guardrail System.

SHOULDER WIDENING FOR TYPE 1 (SPECIAL) GUARDRAIL TERMINALS

(Sheet 1 of 2)

STANDARD 630301-05

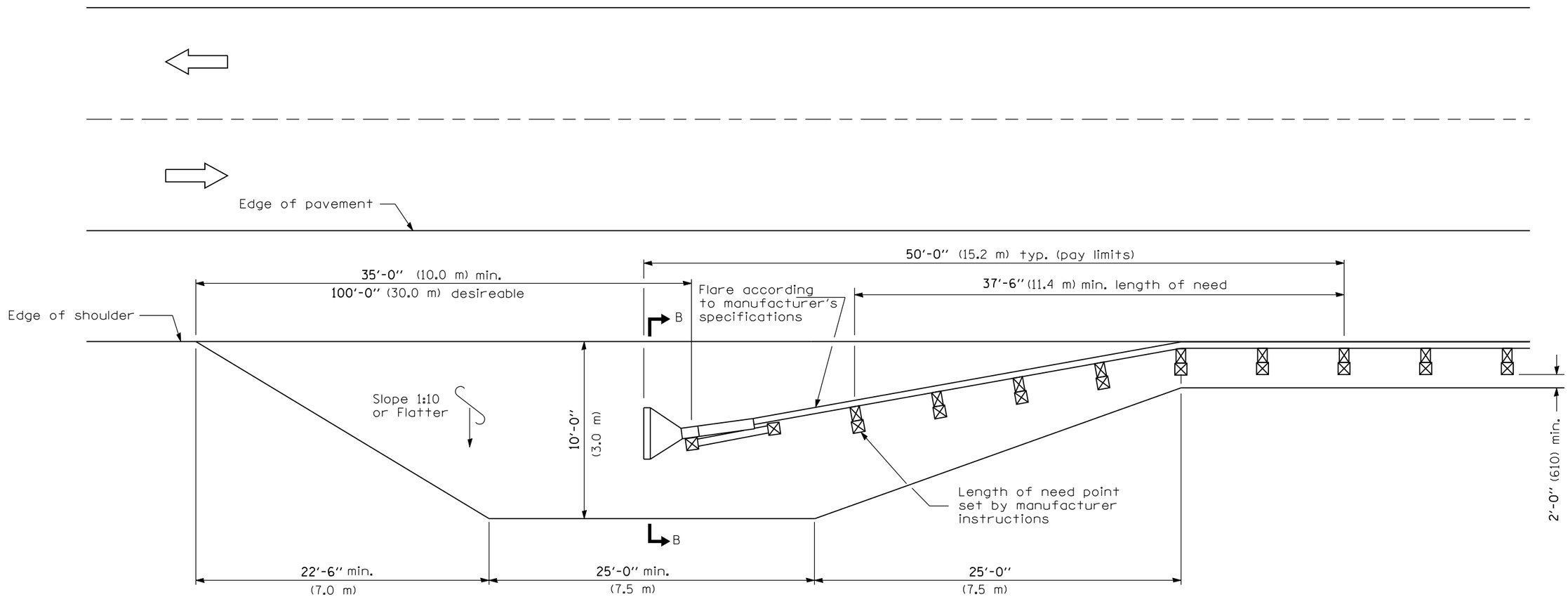

SHOULDER WIDENING TRANSITION FOR FLARED TERMINAL

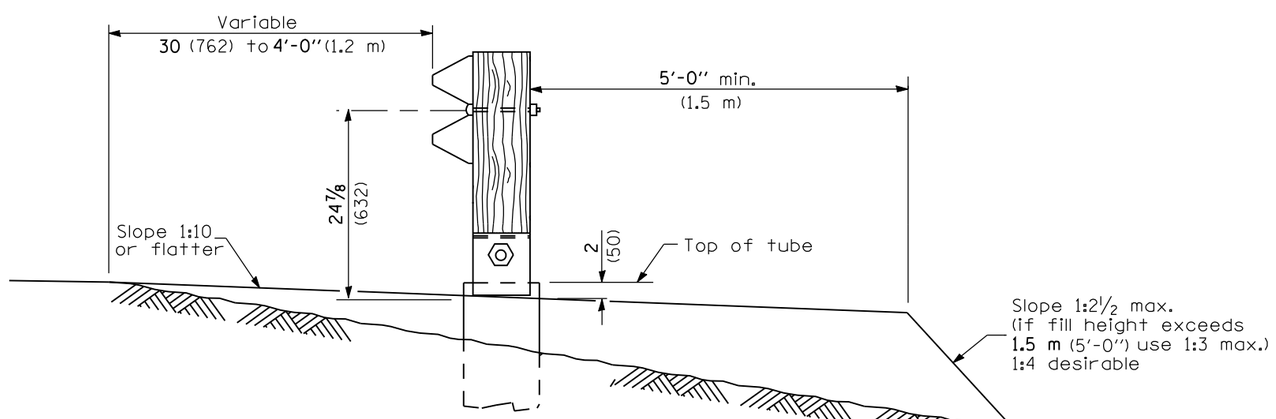

SECTION B-B

(Impact Head omitted for clarity.)

Illinois Department of Transportation

PASSED January 1, 2009
ENGINEER OF POLICY AND PROCEDURES
APPROVED January 1, 2009
ENGINEER OF DESIGN AND ENVIRONMENT

ISSUED 1-1-00

SHOULDER WIDENING FOR TYPE 1 (SPECIAL) GUARDRAIL TERMINALS

(Sheet 2 of 2)

STANDARD 630301-05

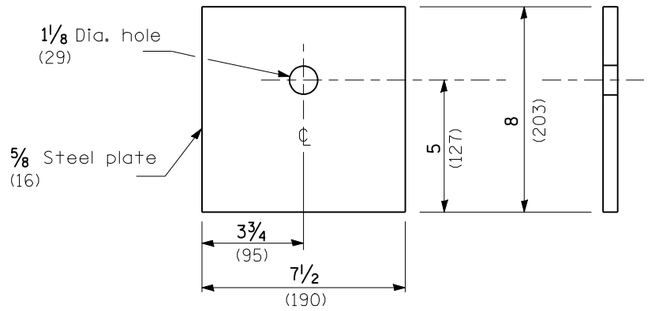

BEARING PLATE K

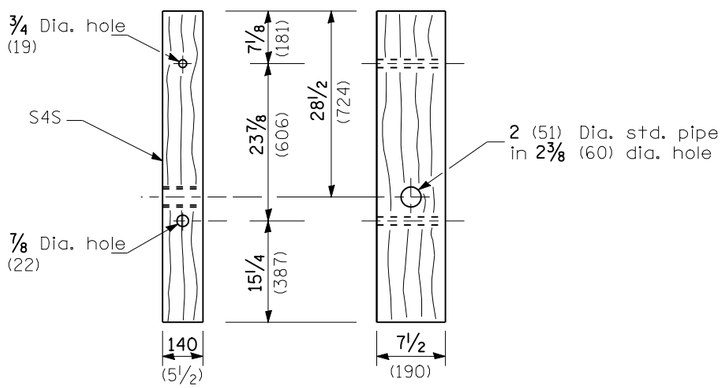

FRONT SIDE

WOOD POST

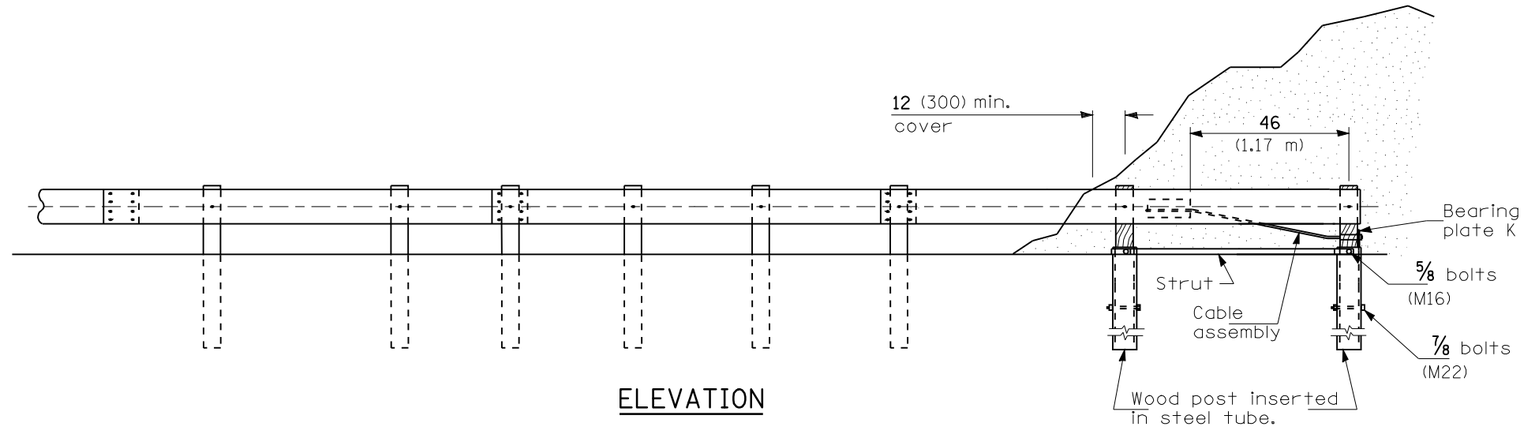

ELEVATION

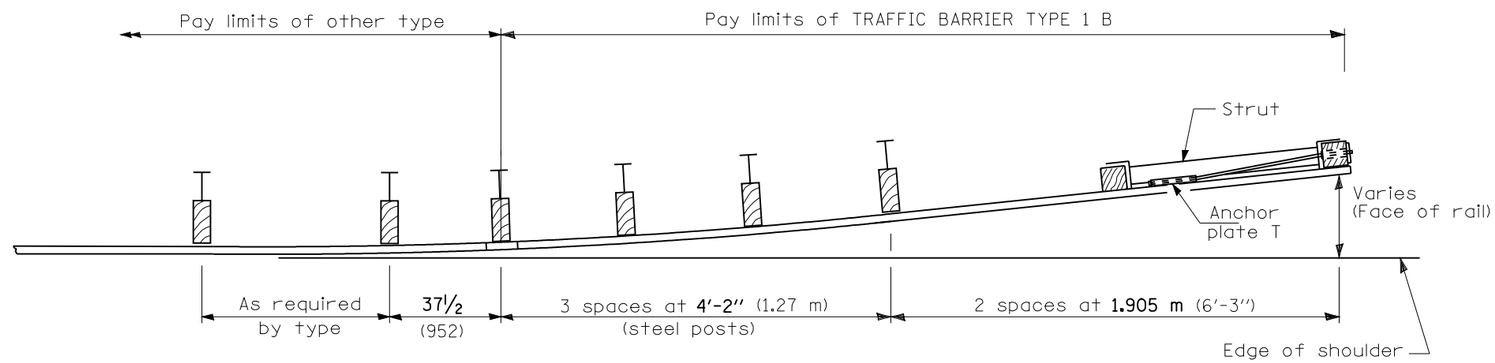

PLAN

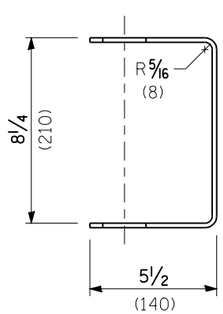

YOKE

⅜ (5) thick steel

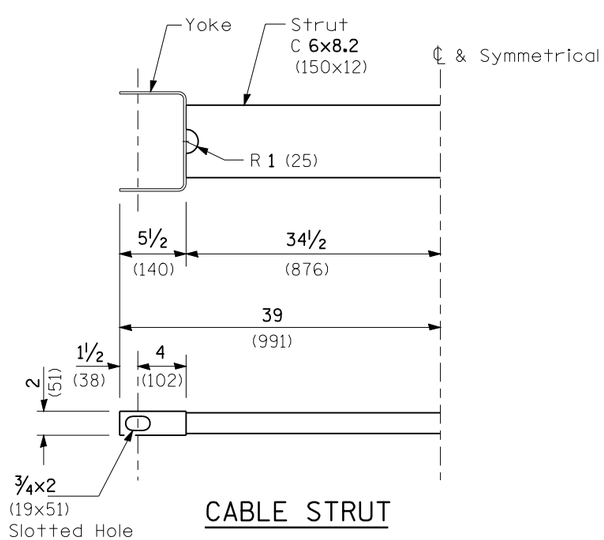

CABLE STRUT

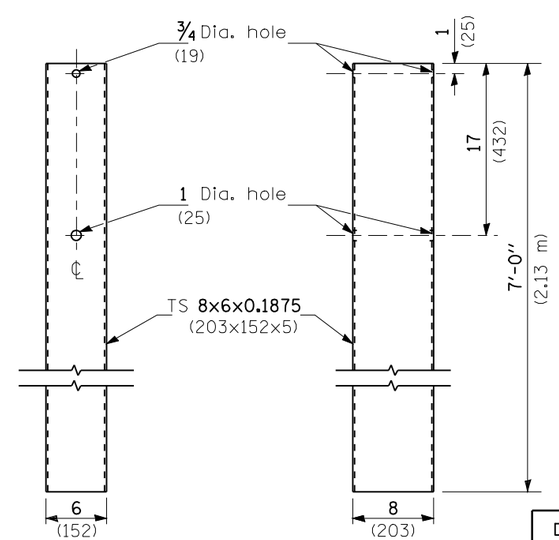

FRONT SIDE

STEEL TUBE

GENERAL NOTES

See Standard 630001 for details of guardrail not shown.

The bearing plate K shall be held in position by two eight penny nails driven into the post and bent over the top of the plate.

All dimensions are in inches (millimeters) unless otherwise shown.

Illinois Department of Transportation

PASSED January 1, 2010
ENGINEER OF POLICY AND PROCEDURES

APPROVED January 1, 2010
ENGINEER OF DESIGN AND ENVIRONMENT

ISSUED 1-1-97

DATE	REVISIONS
1-1-10	Increased steel tube
	length, corrected hole
	locations in tube.
1-1-09	Switched units to
	English (metric).

TRAFFIC BARRIER TERMINAL, TYPE 1B

STANDARD 631006-07

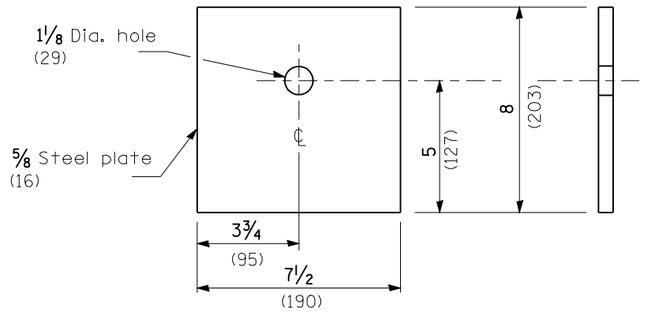

BEARING PLATE K

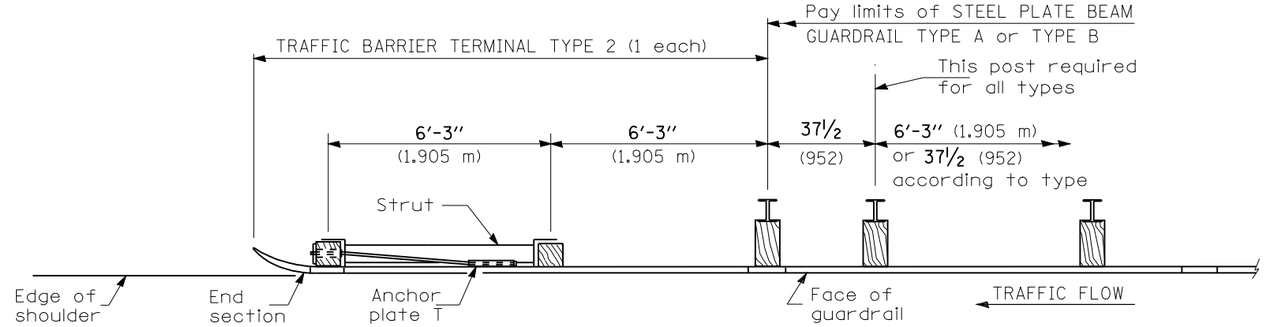

PLAN

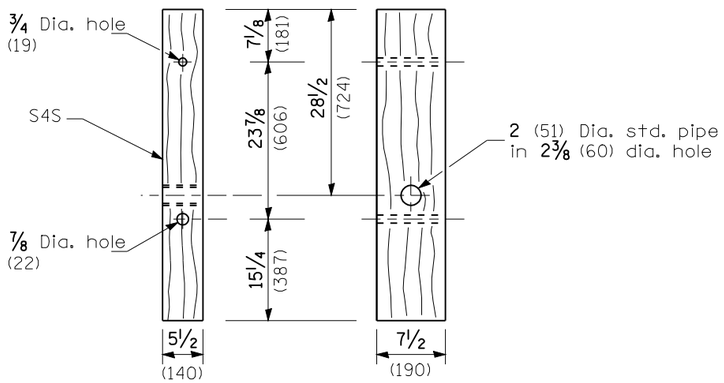

FRONT SIDE

WOOD POST

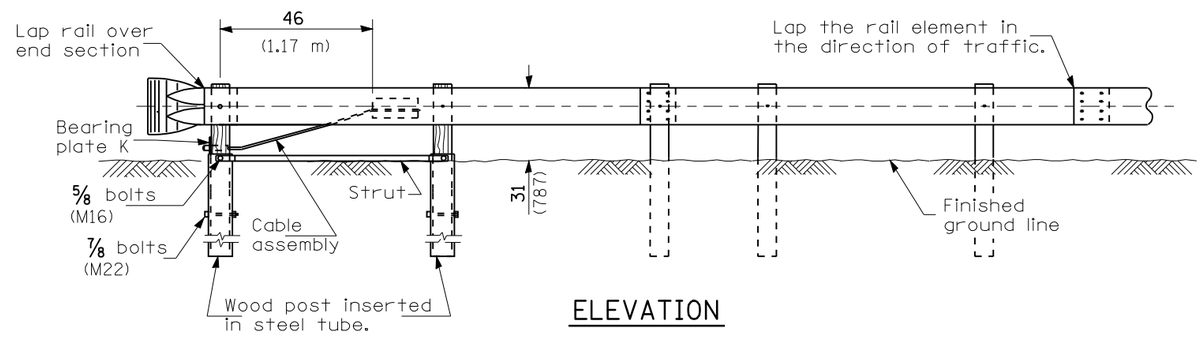

ELEVATION

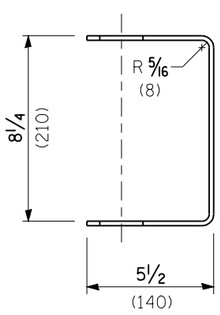

YOKE

3/16 (5) thick steel

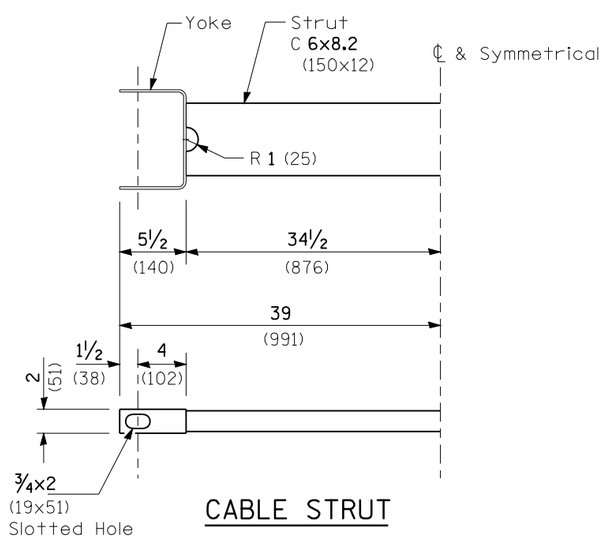

CABLE STRUT

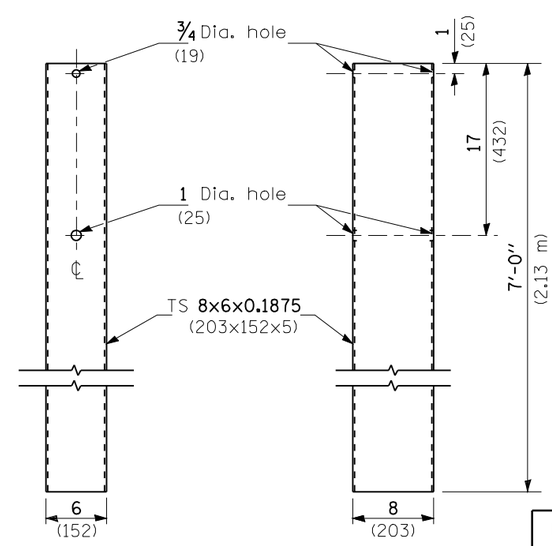

FRONT SIDE

STEEL TUBE

GENERAL NOTES

See Standard 630001 for details of guardrail not shown.

The bearing plate K shall be held in position by two eight penny nails driven into the post and bent over the top of the plate.

All dimensions are in inches (millimeters) unless otherwise shown.

Illinois Department of Transportation

PASSED January 1, 2010
ENGINEER OF POLICY AND PROCEDURES

APPROVED January 1, 2010
ENGINEER OF DESIGN AND ENVIRONMENT

ISSUED 1-1-97

DATE	REVISIONS
1-1-10	Corrected hole locations
	for steel tube, modified
	steel tube detail.
1-1-09	Changed length of
	steel tube. Switched
	units to English (metric).

TRAFFIC BARRIER TERMINAL, TYPE 2

STANDARD 631011-06

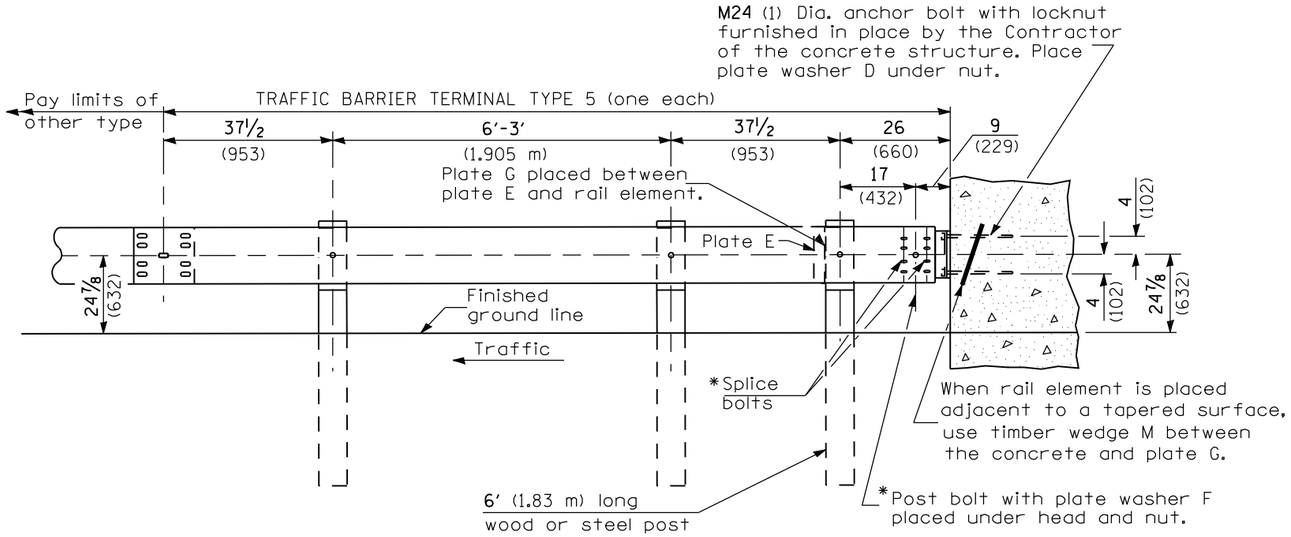

TYPE 5 - CONCRETE BRIDGE PARAPET

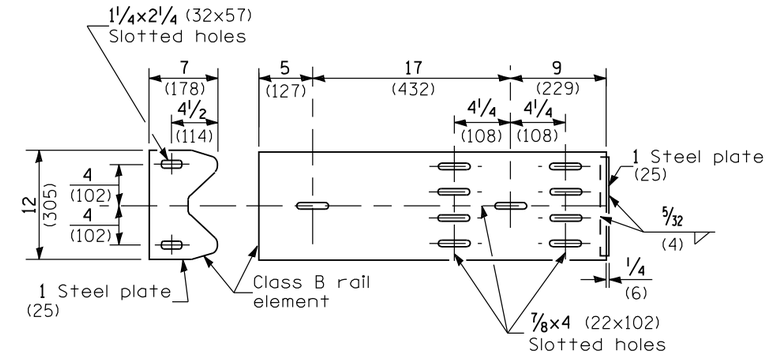

PLATE G

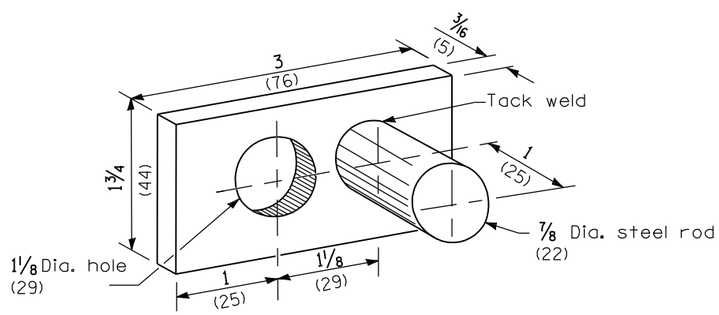

PLATE WASHER D

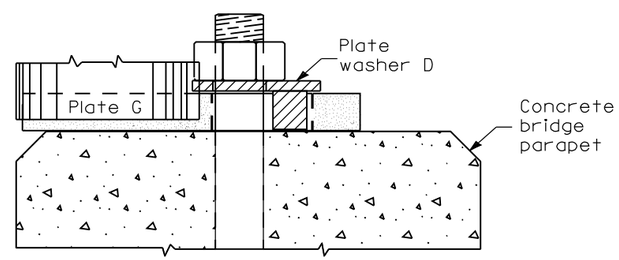

PLACEMENT OF PLATE WASHER D

(PLAN)

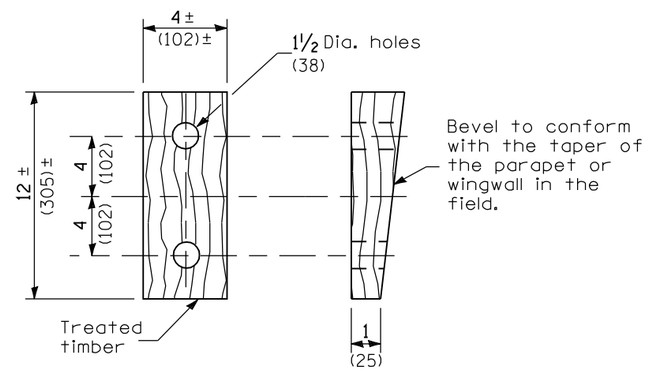

WEDGE M

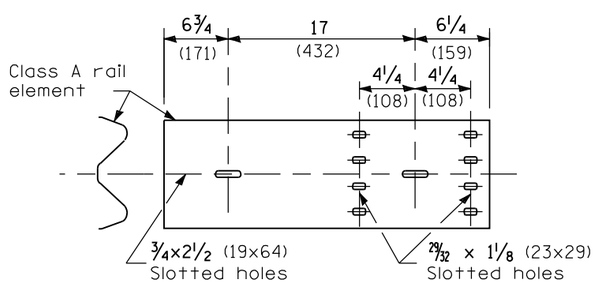

PLATE E

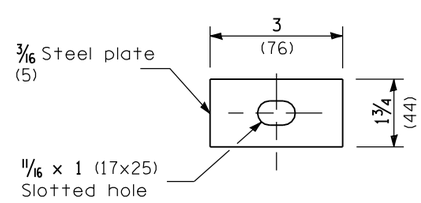

PLATE WASHER F

GENERAL NOTES

Install plate washer D so the 1 (25) projection fills the remainder of the slotted holes in the 1 (25) end plate on plate G after the 1 (M24) dia. bolts are in place.

* When an expansion joint exists below the connector, bolts shall be provided with a locknut or double nuts and shall be tightened only to a point that will allow plate G to be free to move.

See Standard 630001 for details of guardrail not shown.

All dimensions are in inches (millimeters) unless otherwise shown.

Illinois Department of Transportation

PASSED January 1, 2009
ENGINEER OF POLICY AND PROCEDURES
APPROVED January 1, 2009
ENGINEER OF DESIGN AND ENVIRONMENT

ISSUED 1-1-97

DATE	REVISIONS
1-1-09	Switched units to
	English (metric).
1-1-08	Modified Placement of
	Plate Washer D detail
	to show bridge parapet.

TRAFFIC BARRIER TERMINAL, TYPE 5

STANDARD 631026-05

PARAPET OR WINGWALL

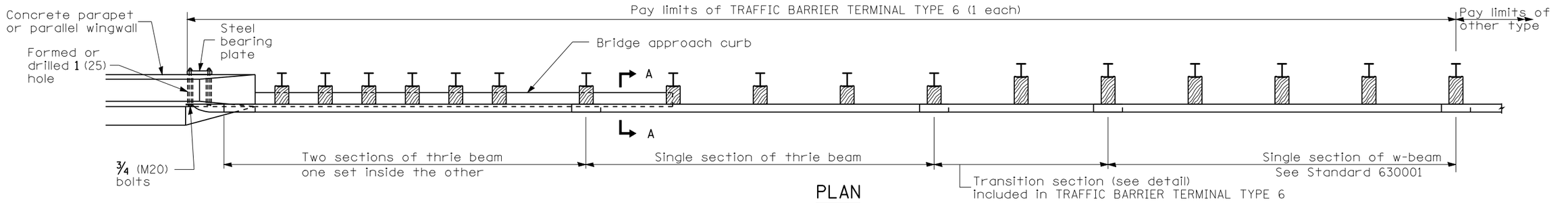

PLAN

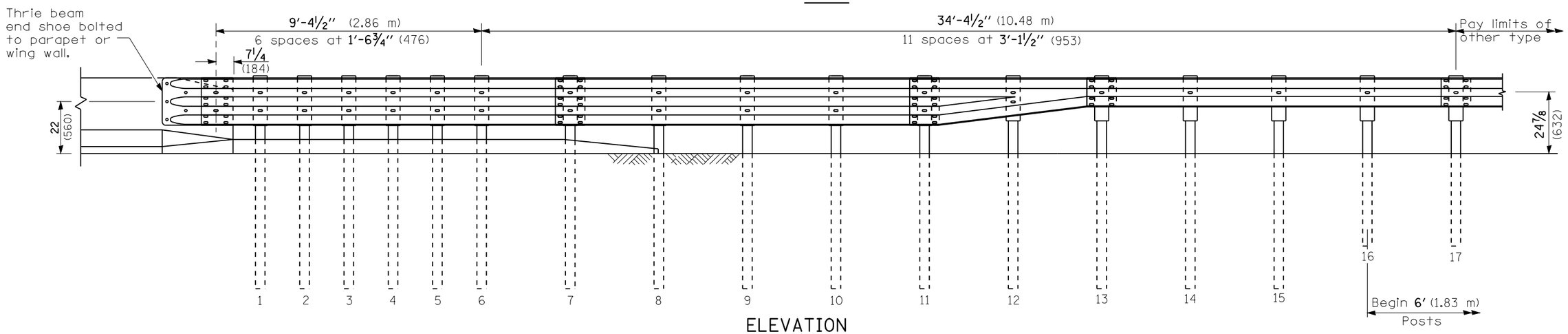

ELEVATION

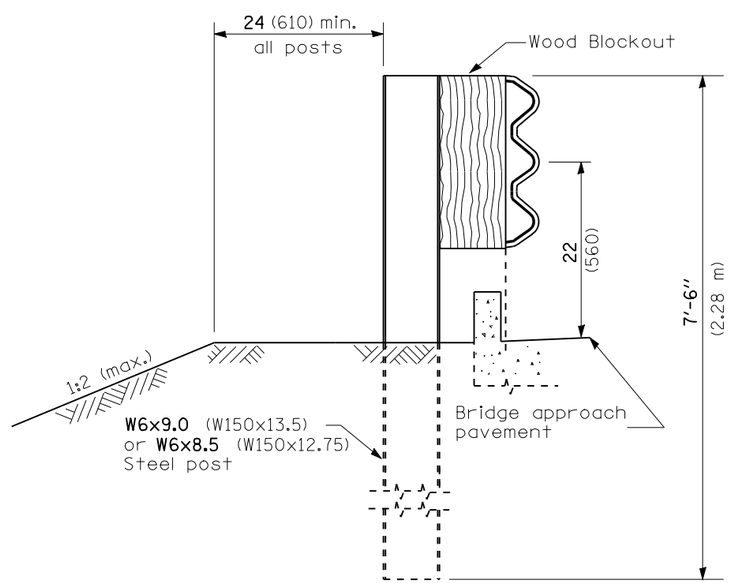

SECTION A-A

GENERAL NOTES

See Standard 630001 for details of guardrail not shown.

Thrie beam rail shall be bolted to block-out at all posts.

All slope ratios are expressed as units of vertical displacement to units of horizontal displacement (V:H).

All dimensions are in inches (millimeters) unless otherwise shown.

Illinois Department of Transportation

PASSED January 1, 2010
ENGINEER OF POLICY AND PROCEDURES
APPROVED January 1, 2010
ENGINEER OF DESIGN AND ENVIRONMENT

ISSUED 1-1-97

DATE	REVISIONS
1-1-10	Omitted parapet wood
	block-out. Reduced curb
	to 15'. Add alt. post sz.
1-1-09	Switched units to
	English (metric).

TRAFFIC BARRIER TERMINAL, TYPE 6

(Sheet 1 of 3)

STANDARD 631031-08

OTHER CONCRETE STRUCTURE

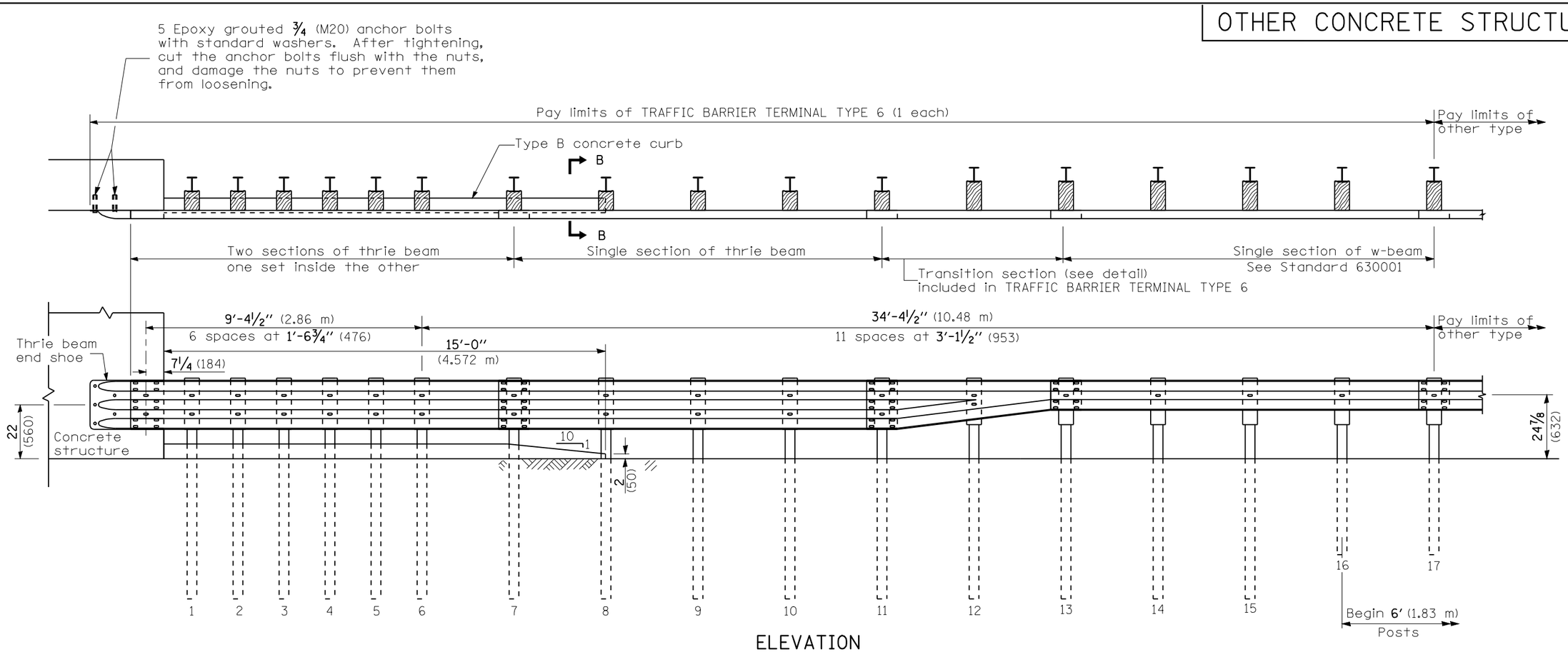

ELEVATION

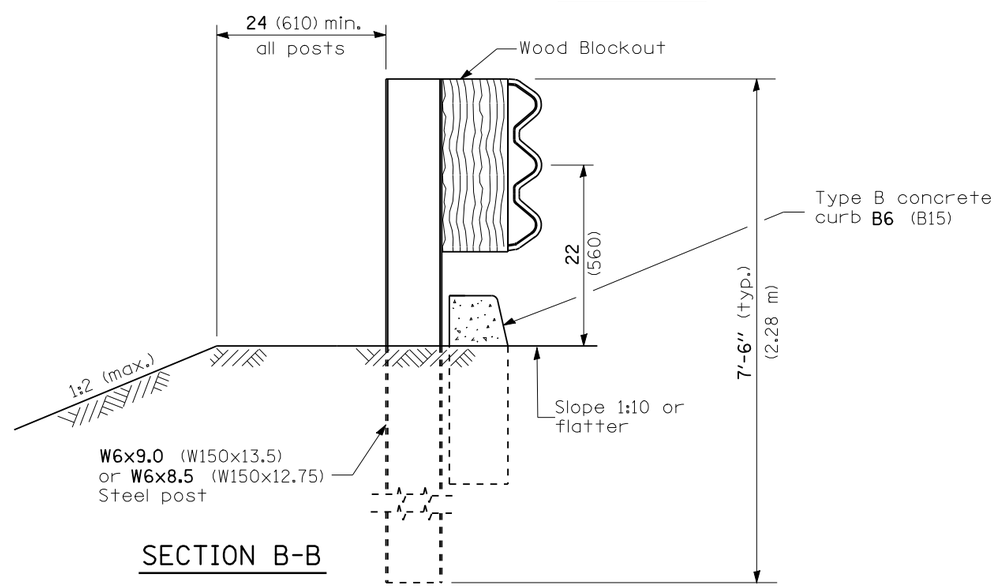

SECTION B-B

Illinois Department of Transportation

PASSED January 1, 2010
ENGINEER OF POLICY AND PROCEDURES

APPROVED January 1, 2010
ENGINEER OF DESIGN AND ENVIRONMENT

ISSUED 1-1-97

TRAFFIC BARRIER TERMINAL, TYPE 6

(Sheet 2 of 3)

STANDARD 631031-08

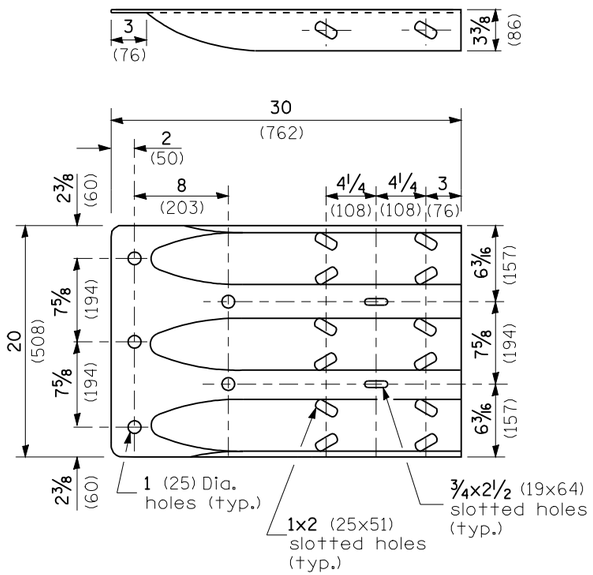

THRIE BEAM END SHOE DETAIL

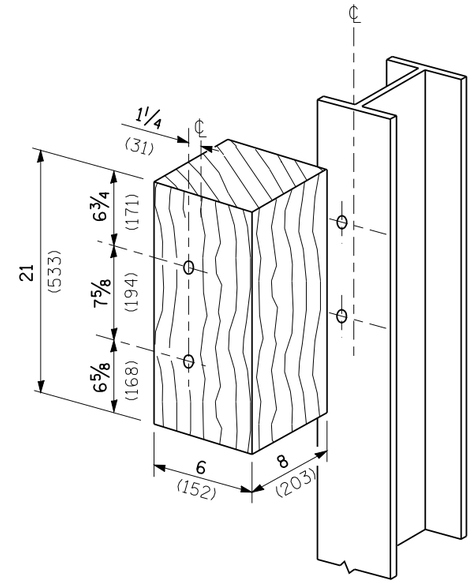

POSTS 1-11 WOOD BLOCKOUT DETAIL

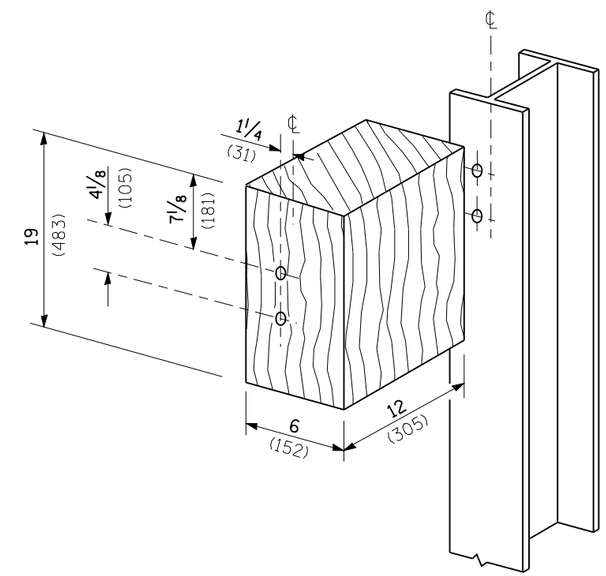

POST 12 WOOD BLOCKOUT DETAIL

(See Standard 630001 for post 13-17 blockouts.)

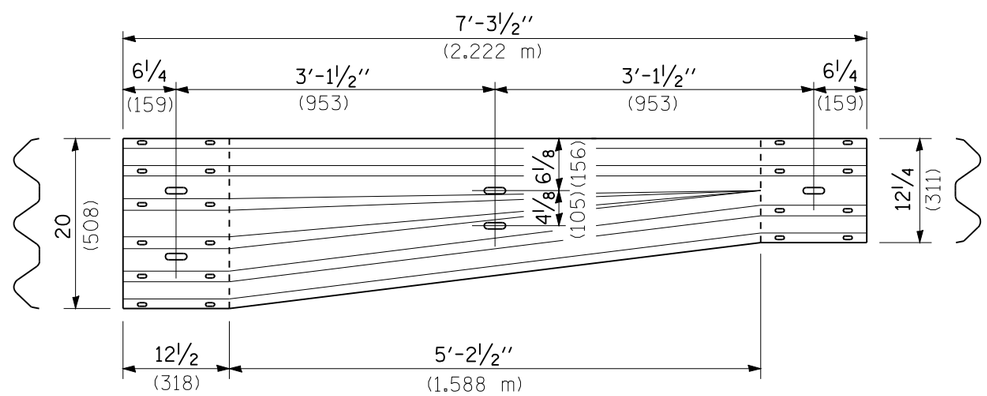

TRANSITION SECTION

(10 guage (3.4) rail element)

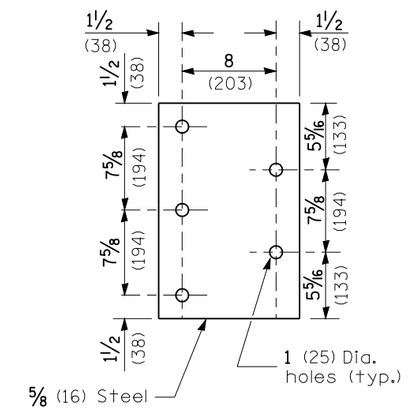

PARAPET STEEL BEARING PLATE DETAIL

(5 each individual 5x5x5/8 (125x125x16) steel plates with centered 1 (25) holes may be substituted for the plate shown.)

Illinois Department of Transportation

PASSED January 1, 2010

ENGINEER OF POLICY AND PROCEDURES

APPROVED January 1, 2010

ENGINEER OF DESIGN AND ENVIRONMENT

ISSUED 1-1-97

TRAFFIC BARRIER TERMINAL, TYPE 6

(Sheet 3 of 3)

STANDARD 631031-08

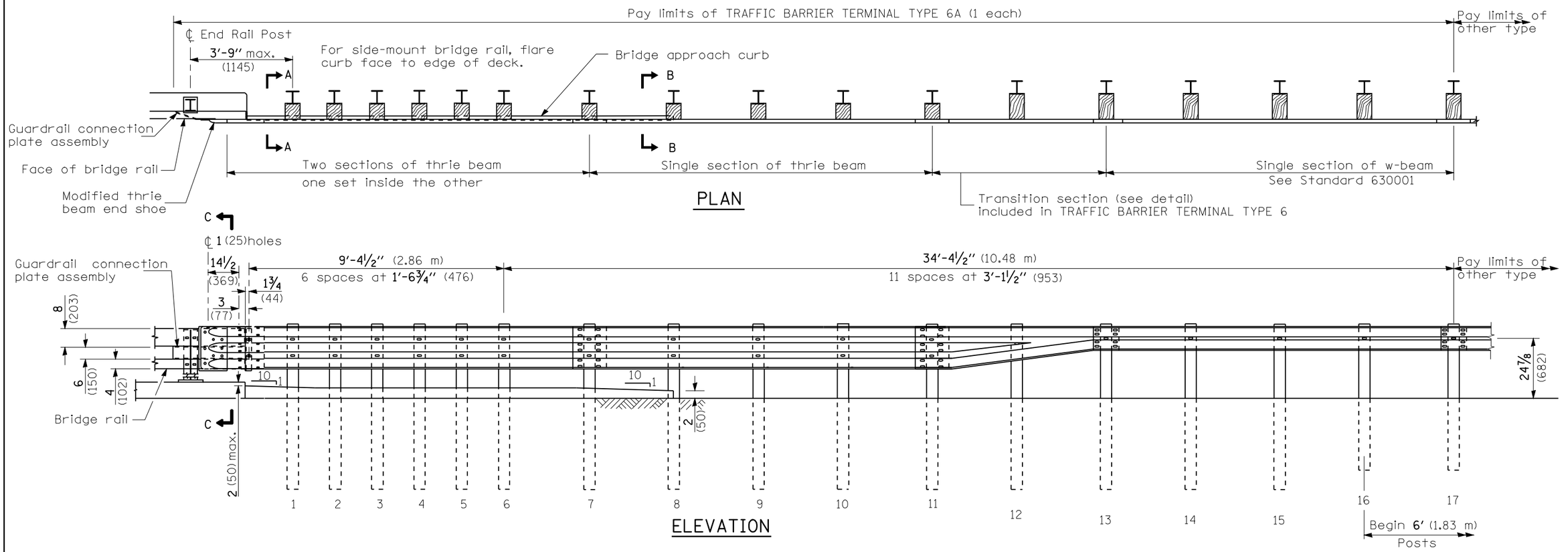

GENERAL NOTES

This standard shows attachment to curb mounted bridge rail. Attachment to side mounted bridge rail is similar.

See Standard 630001 for details of guardrail not shown.

Thrie beam rail shall be bolted to block-out at all posts.

All slope ratios are expressed as units of vertical displacement to units of horizontal displacement (V:H).

All dimensions are in inches (millimeters) unless otherwise shown.

Illinois Department of Transportation

PASSED January 1, 2010
ENGINEER OF POLICY AND PROCEDURES

APPROVED January 1, 2010
ENGINEER OF DESIGN AND ENVIRONMENT

ISSUED 1-1-2003

DATE	REVISIONS
1-1-10	Corr. dim. on conn.
	angle. Added alternate
	post size.
1-1-09	Switched units to
	English (metric).
	Rev. Gen. Notes

TRAFFIC BARRIER TERMINAL, TYPE 6A

(Sheet 1 of 3)

STANDARD 631032-05

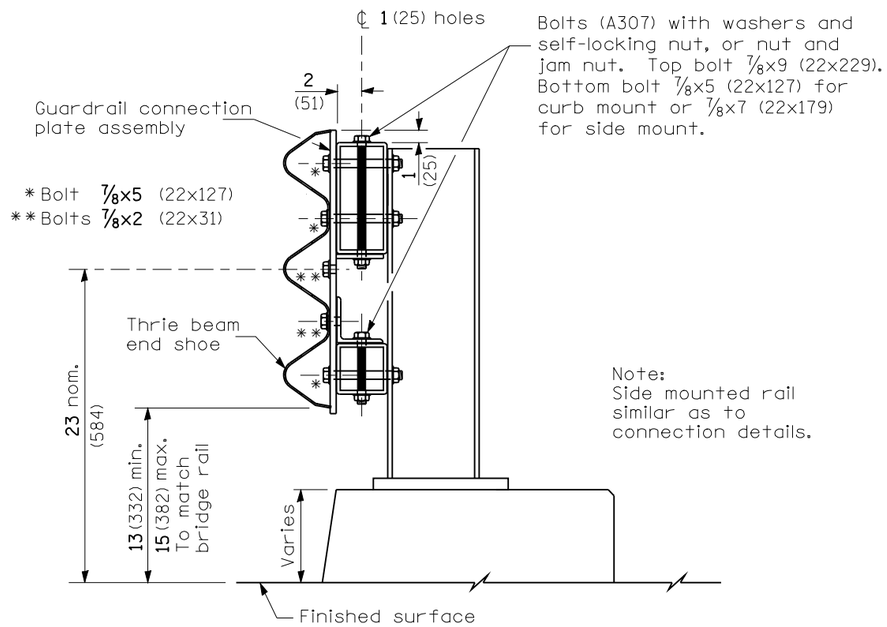

SECTION C-C

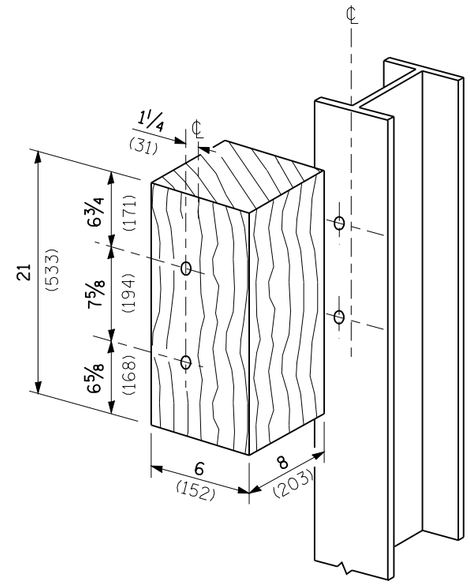

POSTS 1-11 WOOD BLOCKOUT DETAIL

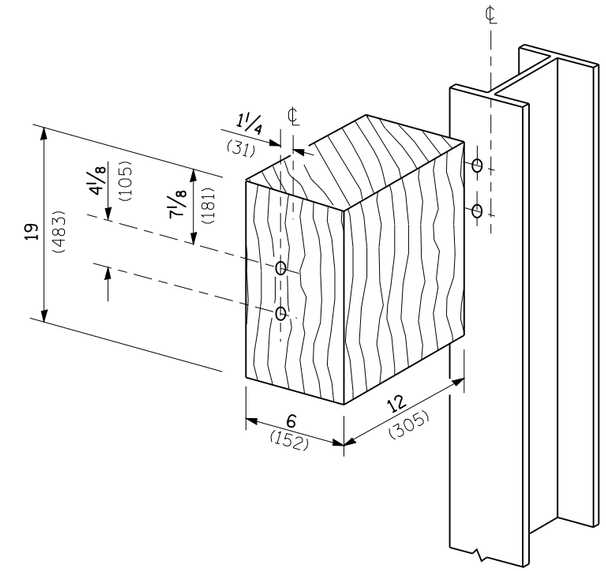

POST 12 WOOD BLOCKOUT DETAIL

(See Standard 630001 for post 13-17 blockouts.)

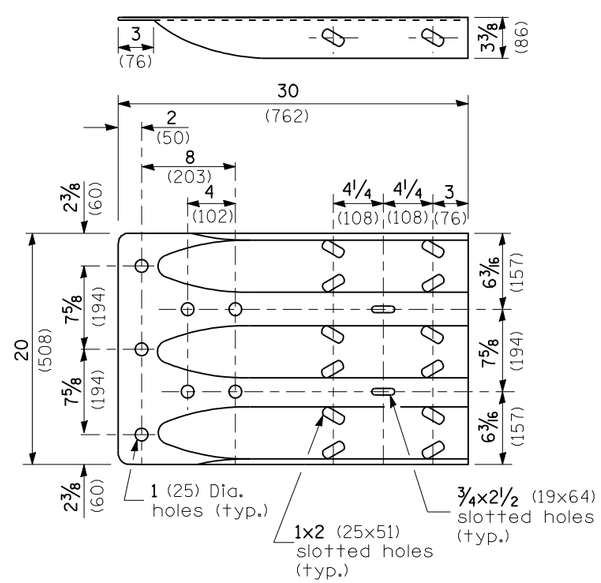

MODIFIED THRIE BEAM END SHOE DETAIL

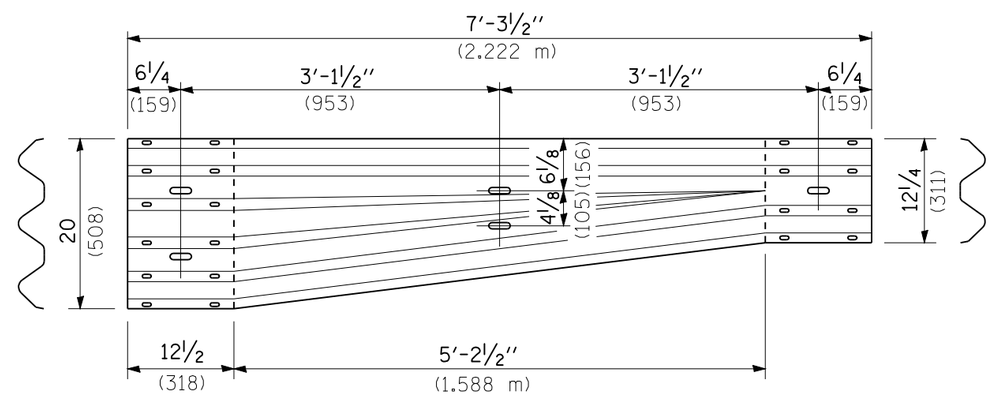

TRANSITION SECTION

(10 guage (3.4) rail element)

Illinois Department of Transportation

PASSED January 1, 2010

ENGINEER OF POLICY AND PROCEDURES

APPROVED January 1, 2010

ENGINEER OF DESIGN AND ENVIRONMENT

ISSUED 1-1-2003

TRAFFIC BARRIER TERMINAL, TYPE 6A

(Sheet 2 of 3)

STANDARD 631032-05

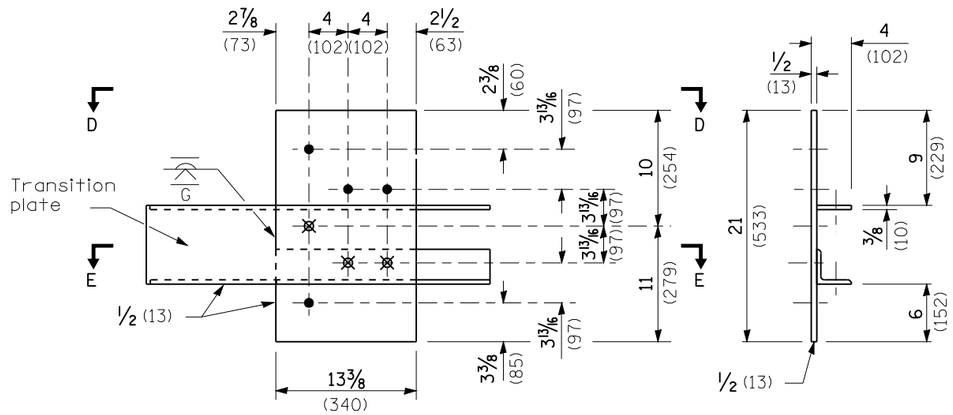

● ℄ 4-1 (25) holes for 7/8 (22) H.S. bolts and nuts

⊠ Drill and tap 3 holes for 7/8 (22) H.S. bolts.

LEGEND

Dimensions	A	B
For Curb Mounted Rail	8 3/4 (222)	3 1/2 (89)
For Side Mounted Rail	9 3/4 (247)	2 1/2 (64)

GUARDRAIL CONNECTION PLATE ASSEMBLY DETAILS

(Mirror for opposite end)

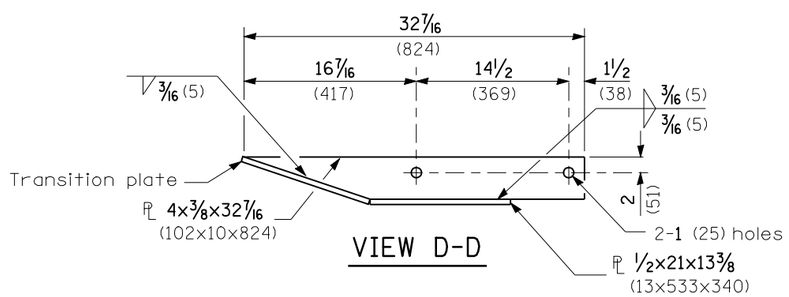

VIEW D-D

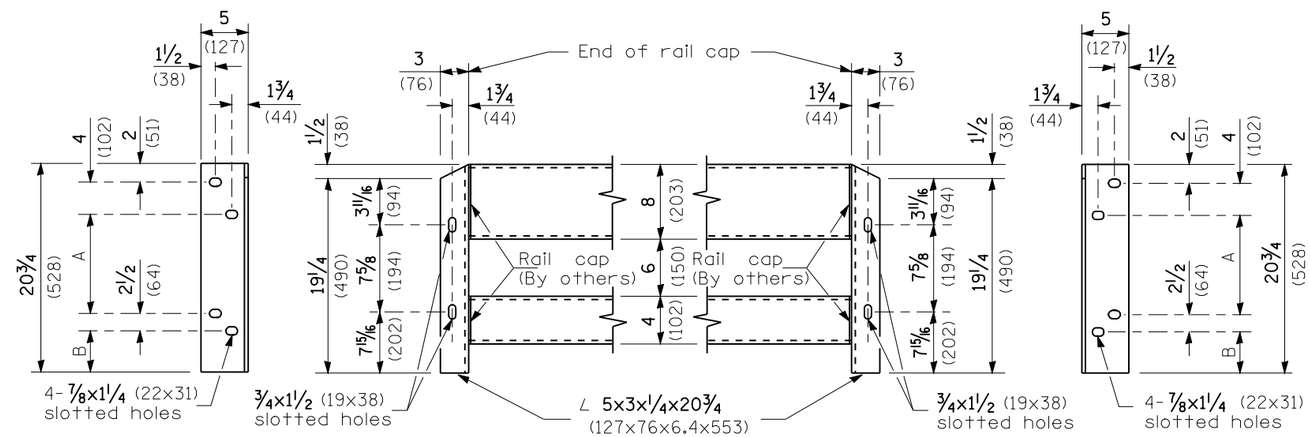

DEPARTURE END VIEW

APPROACH END VIEW

CONNECTION ANGLES

(Install angles to rail caps using 19 (5/8) washers and self-locking nuts or nuts and jam nuts, to be provided by others)

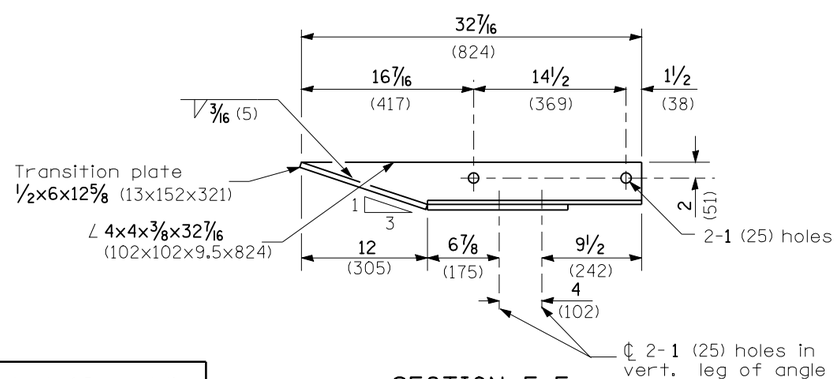

SECTION E-E

Illinois Department of Transportation

PASSED January 1, 2010
ENGINEER OF POLICY AND PROCEDURES

APPROVED January 1, 2010
ENGINEER OF DESIGN AND ENVIRONMENT

ISSUED 1-1-2003

TRAFFIC BARRIER TERMINAL, TYPE 6A

(Sheet 3 of 3)

STANDARD 631032-05

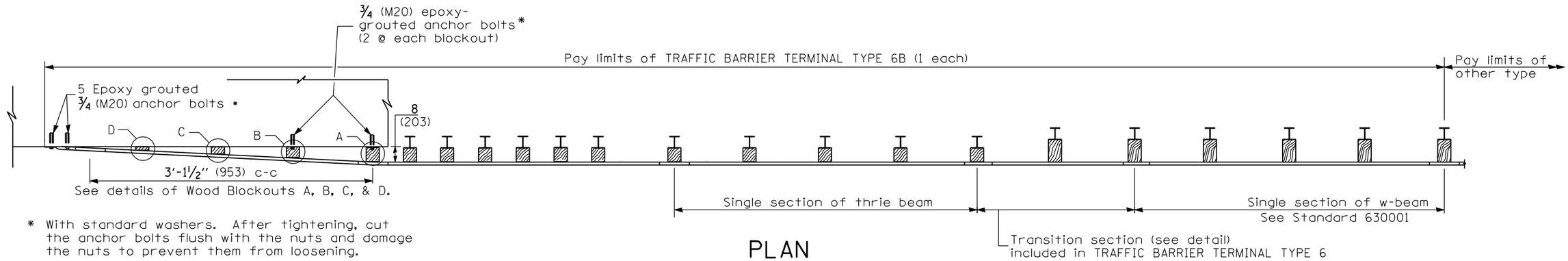

* With standard washers. After tightening, cut the anchor bolts flush with the nuts and damage the nuts to prevent them from loosening.

PLAN

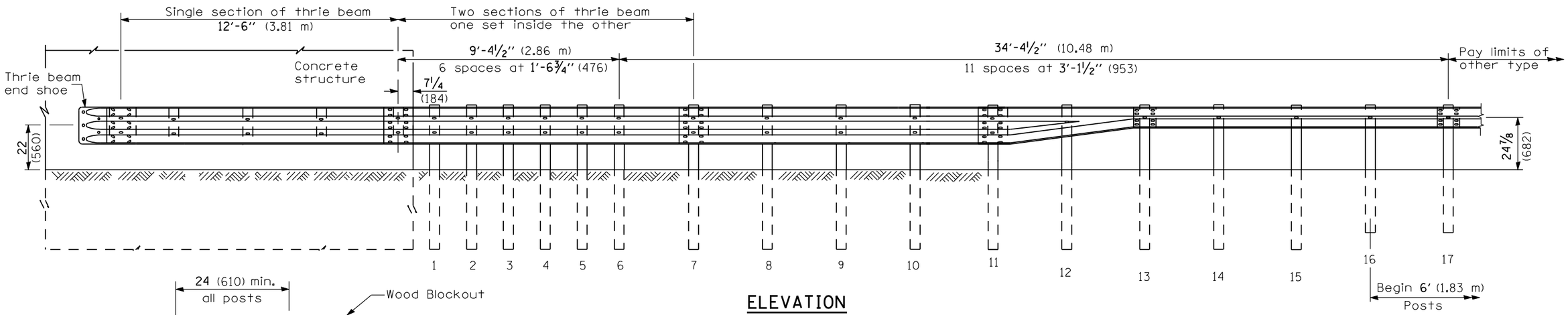

ELEVATION

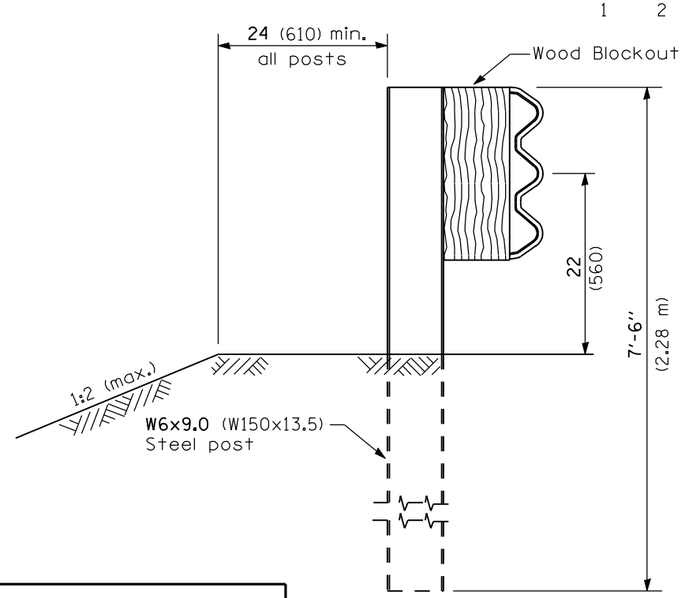

SECTION A-A

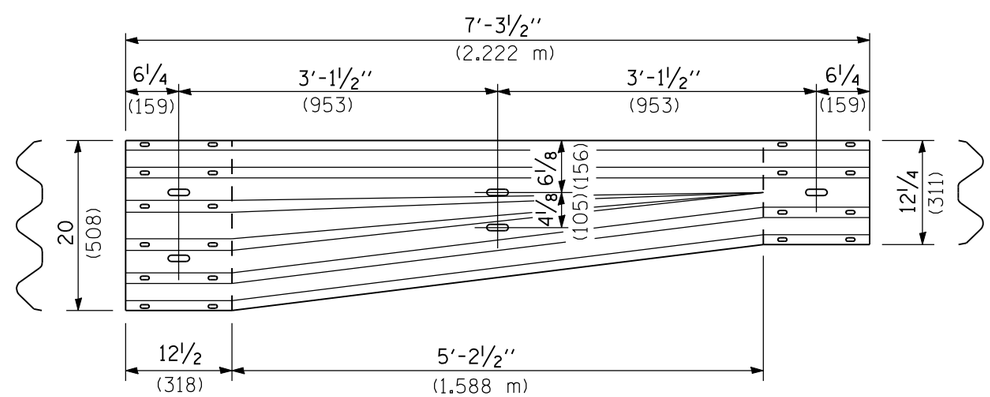

TRANSITION SECTION

(10 guage (3.4) rail element)

GENERAL NOTES

See Standard 630001 for details of guardrail not shown.

Thrie beam rail shall be bolted to block-out at all posts.

All slope ratios are expressed as units of vertical displacement to units of horizontal displacement (V:H).

All dimensions are in inches (millimeters) unless otherwise shown.

Illinois Department of Transportation

PASSED January 1. 2009
ENGINEER OF POLICY AND PROCEDURES
APPROVED January 1. 2009
ENGINEER OF DESIGN AND ENVIRONMENT

ISSUED 1-1-2003

DATE	REVISIONS
1-1-09	Switched units to
	English (metric).
1-1-07	Changes adopted to
	implement the Midwest
	Guardrail System.

TRAFFIC BARRIER TERMINAL, TYPE 6B

(Sheet 1 of 2)

STANDARD 631033-03

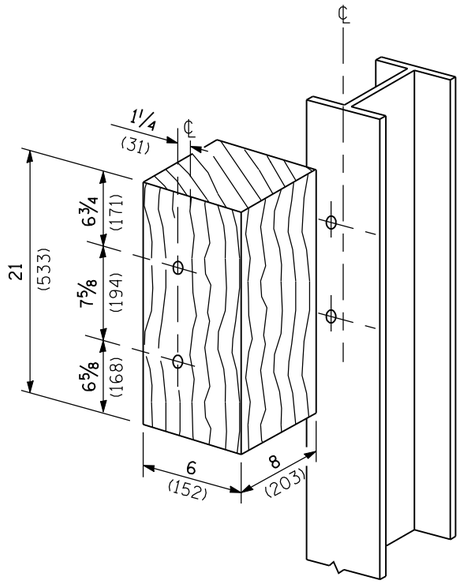

POSTS 1-11 WOOD BLOCKOUT DETAIL

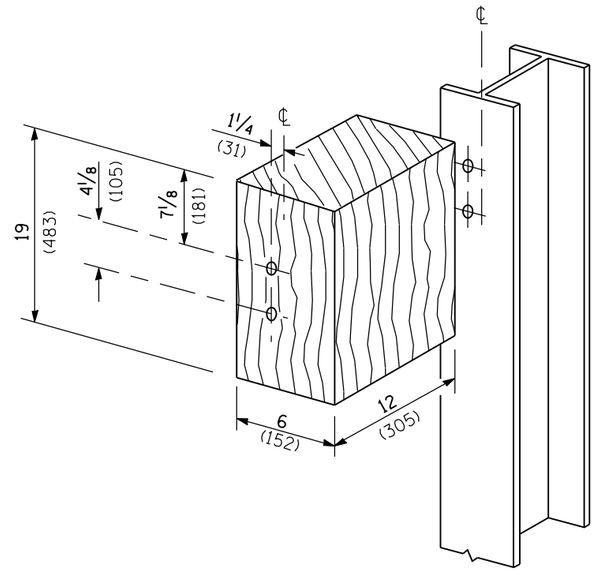

POST 12 WOOD BLOCKOUT DETAIL

(See Standard 630001 for post 13-17 blockouts.)

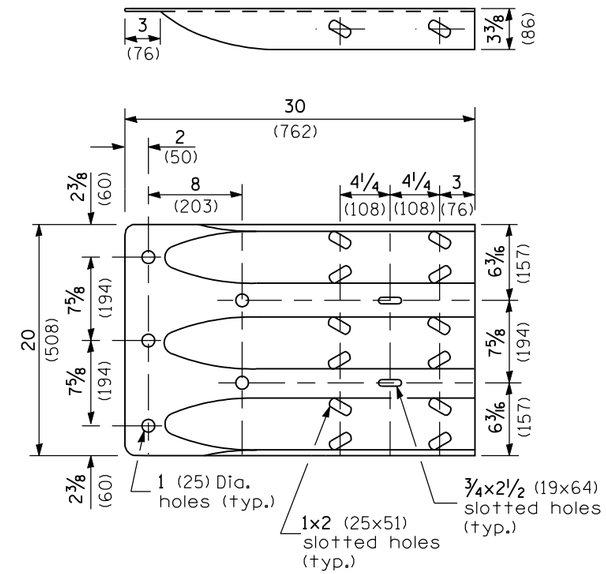

THRIE BEAM END SHOE DETAIL

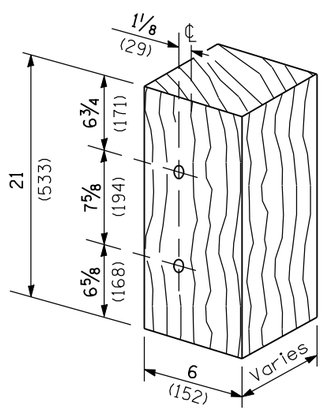

MODIFIED THICKNESS DETAIL

WOOD BLOCKOUTS A, B, C, & D

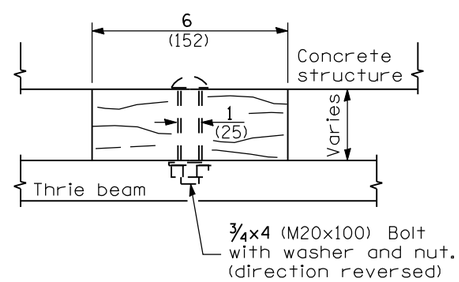

WOOD BLOCKOUT D

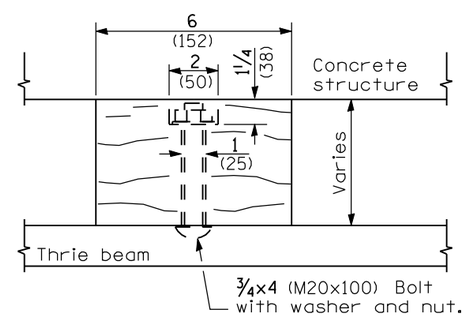

WOOD BLOCKOUT C

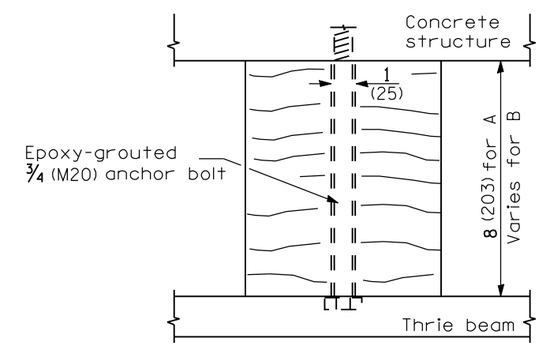

WOOD BLOCKOUT A & B

Illinois Department of Transportation

PASSED January 1, 2009

ENGINEER OF POLICY AND PROCEDURES

APPROVED January 1, 2009

ENGINEER OF DESIGN AND ENVIRONMENT

ISSUED 1-1-2003

TRAFFIC BARRIER TERMINAL, TYPE 6B

(Sheet 2 of 2)

STANDARD 631033–02

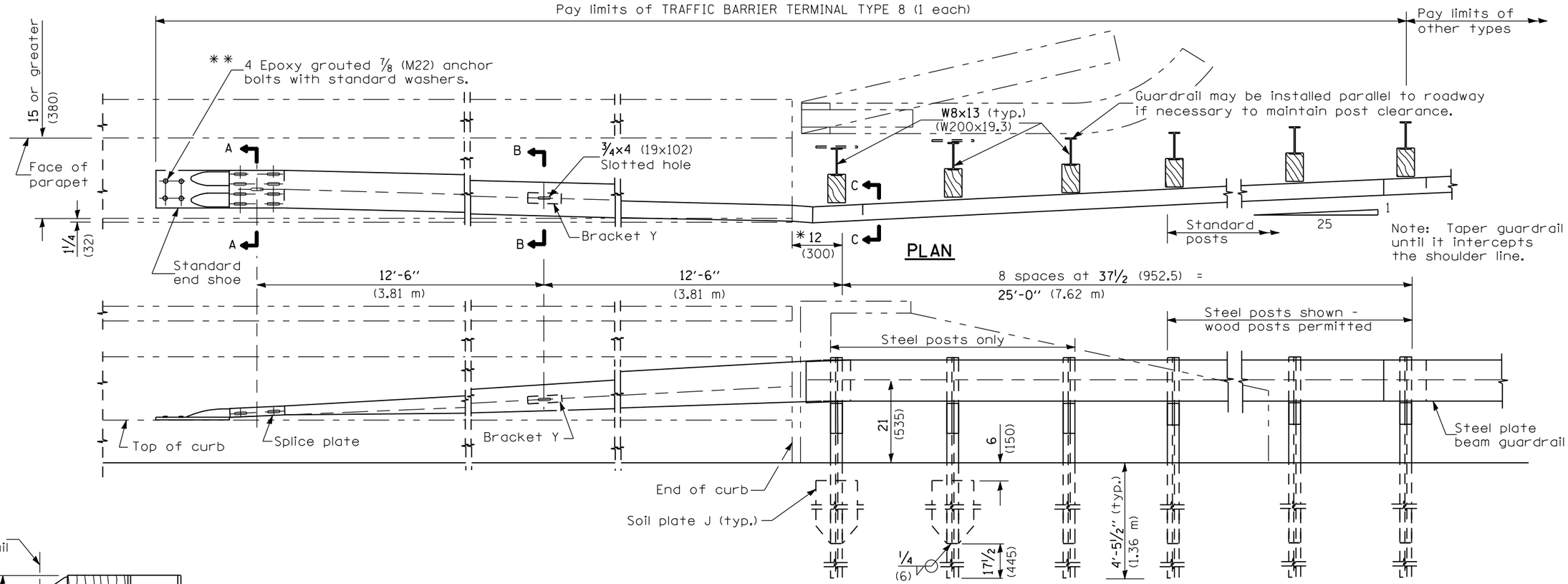

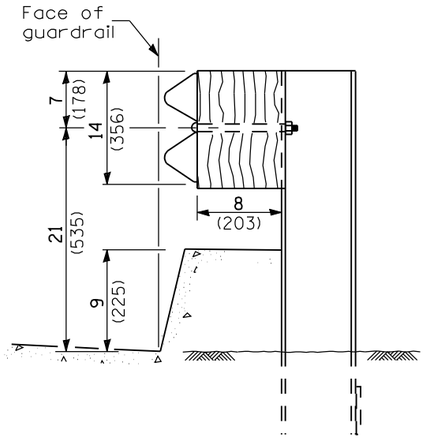

SECTION C-C

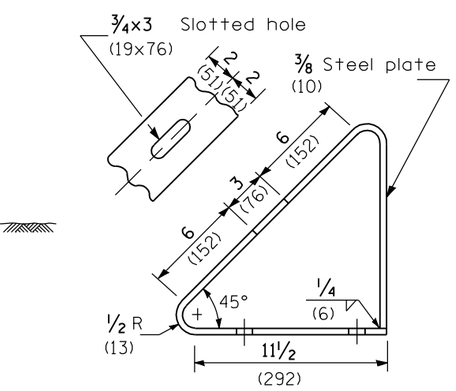

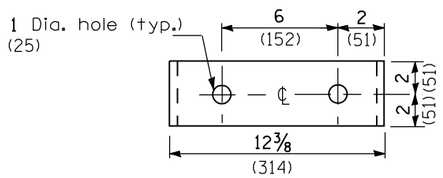

BRACKET Y

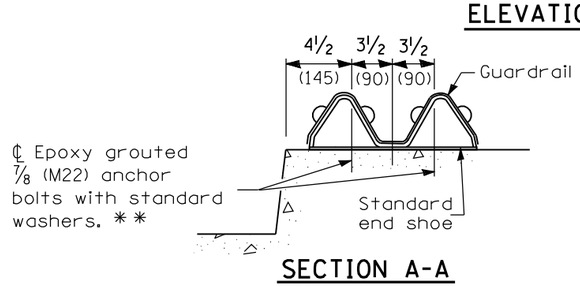

SECTION A-A

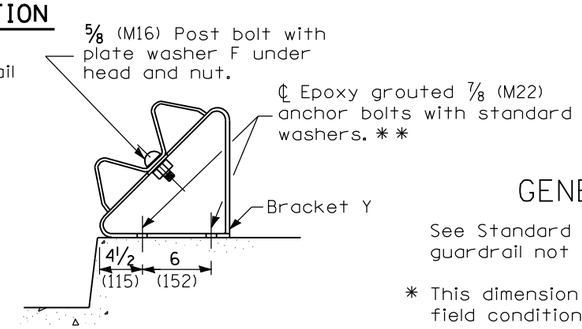

SECTION B-B

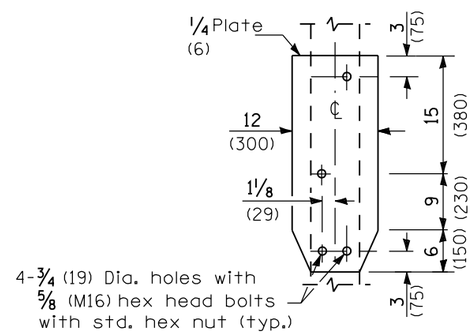

SOIL PLATE J & ALTERNATE CONNECTION DETAILS

GENERAL NOTES

See Standard 630001 for details of guardrail not shown.

* This dimension may be increased to fit field conditions. This post shall be located first. The layout of the terminal shall be determined by its location.

** After tightening, cut the anchor bolts flush with nuts, and damage the bolt head to prevent them from loosening.

All dimensions are in inches (millimeters) unless otherwise shown.

Illinois Department of Transportation

PASSED January 1, 2009
ENGINEER OF POLICY AND PROCEDURES
APPROVED January 1, 2009
ENGINEER OF DESIGN AND ENVIRONMENT

ISSUED 1-1-97

DATE	REVISIONS
1-1-09	Switched units to
	English (metric).
1-1-02	Revised M22 (7/8) Bolts.

TRAFFIC BARRIER TERMINAL TYPE 8

STANDARD 631036-05

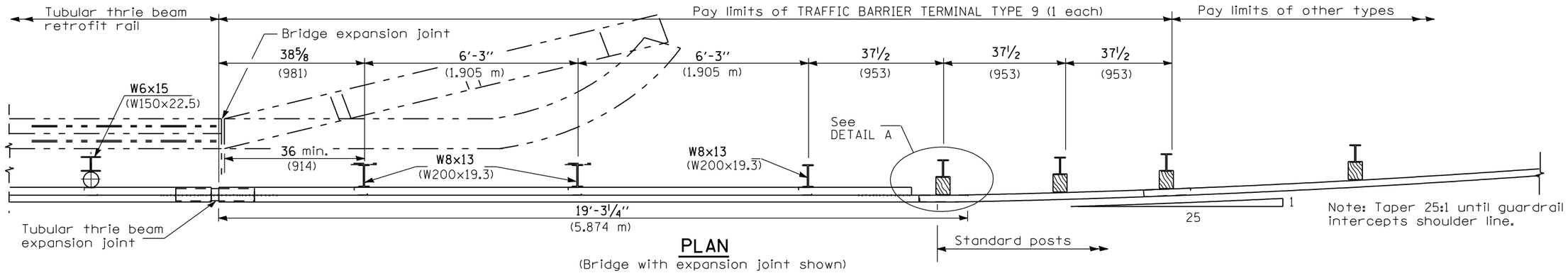

PLAN

(Bridge with expansion joint shown)

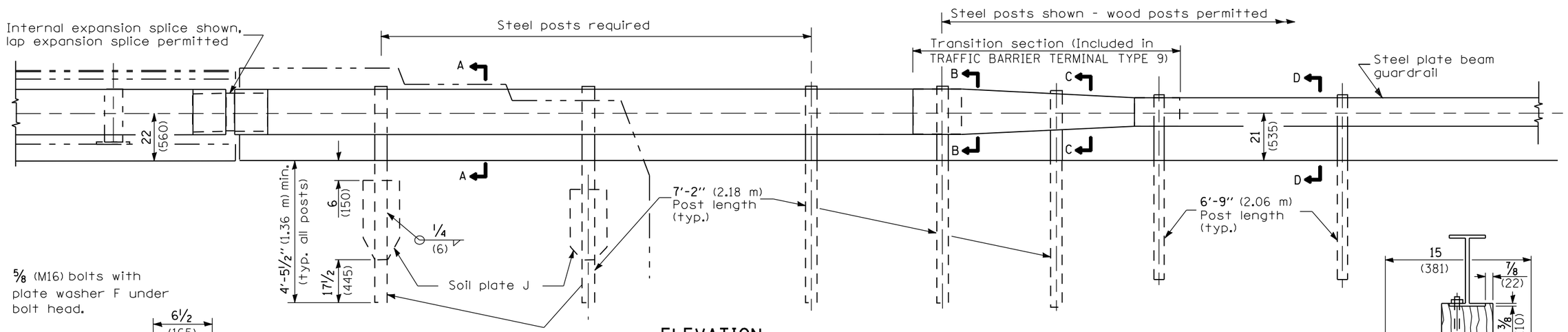

ELEVATION

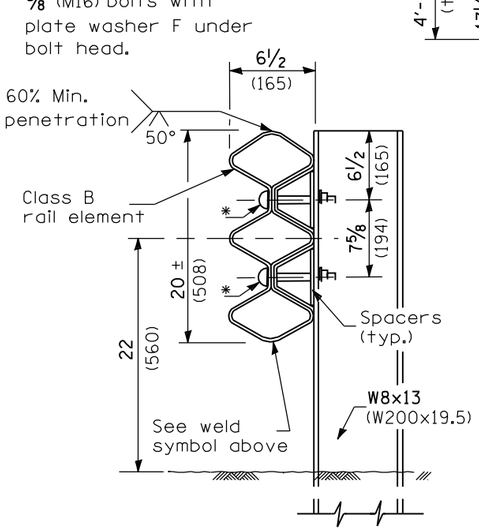

SECTION A-A

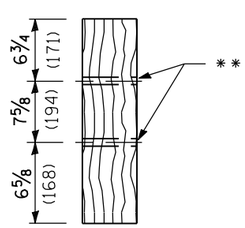

SECTION B-B

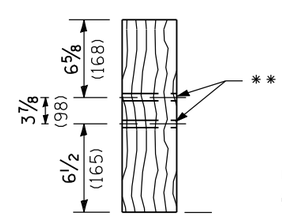

SECTION C-C

DETAILS of BLOCK-OUTS

** ℄ ¾ (19) Dia. hole

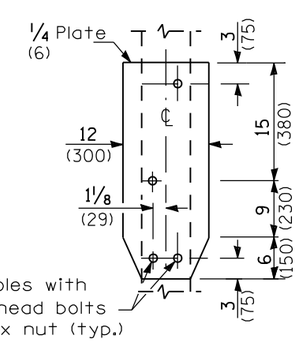

SOIL PLATE J & ALTERNATE CONNECTION DETAILS

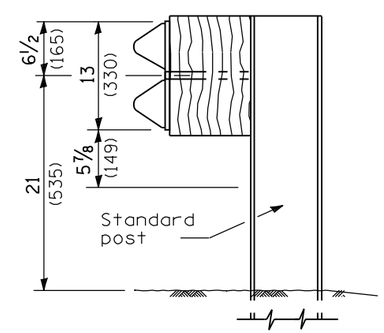

SECTION D-D

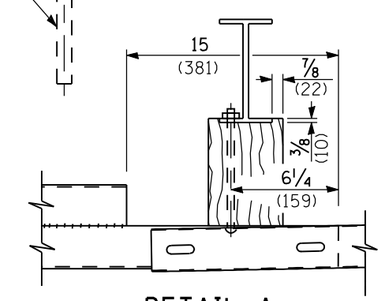

DETAIL A

GENERAL NOTES

See Standards 509001 and 630001 for details of guardrail elements not shown.

The Type 9 terminal shall be installed after the posts for the bridge retrofit rail have been located as shown on Standard 509001.

All dimensions are in inches (millimeters) unless otherwise shown.

Illinois Department of Transportation

PASSED January 1, 2009
ENGINEER OF POLICY AND PROCEDURES
APPROVED January 1, 2009
ENGINEER OF DESIGN AND ENVIRONMENT

ISSUED 1-1-97

DATE	REVISIONS
1-1-09	Switched units to
	English (metric).
10-1-98	Revised to wooden
	block-outs.

TRAFFIC BARRIER TERMINAL TYPE 9

STANDARD 631041-02

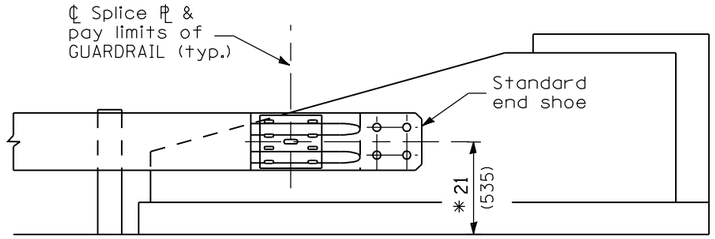

ELEVATION

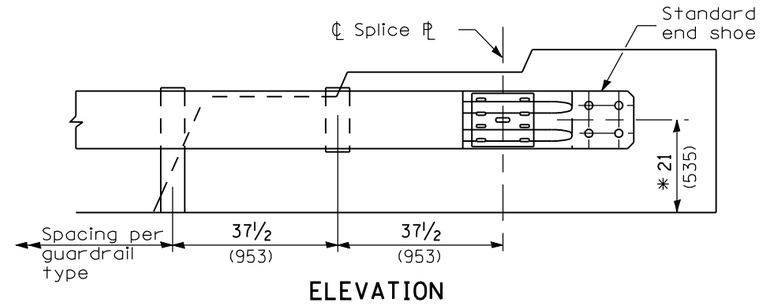

ELEVATION

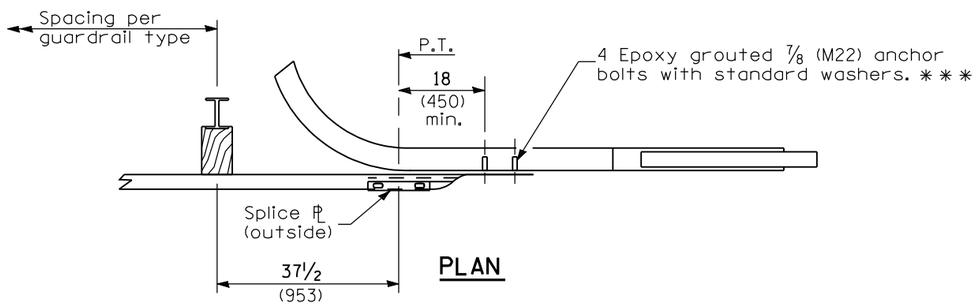

PLAN

CURVED WING

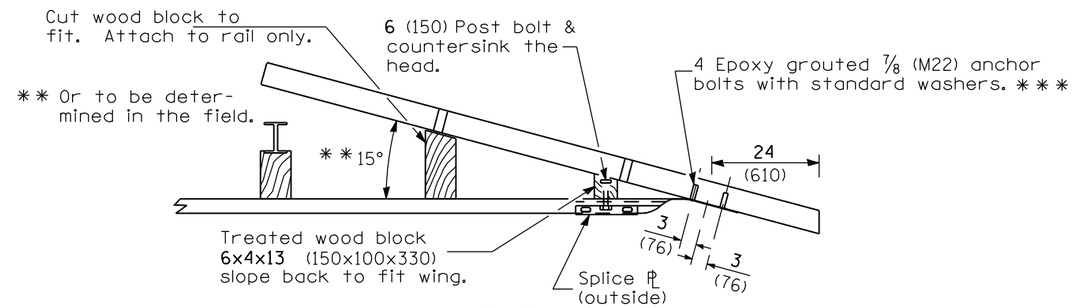

PLAN

FLARED WING

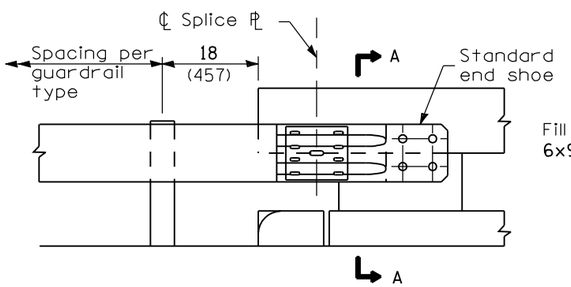

ELEVATION

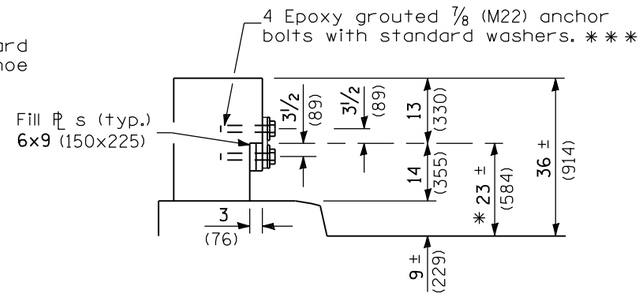

SECTION A-A

(HIGH RAIL)

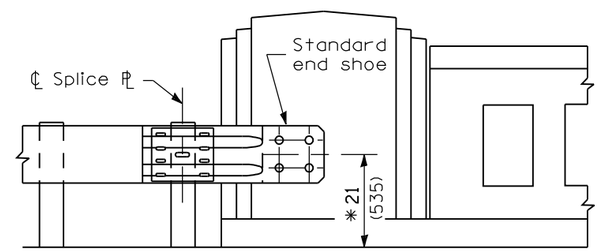

ELEVATION

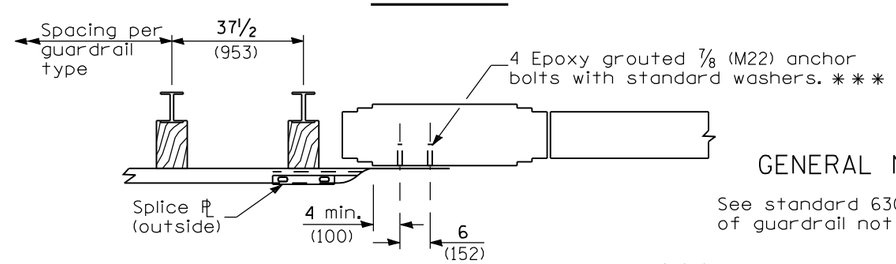

PLAN

CONCRETE HANDRAIL

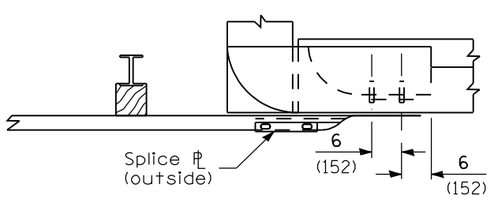

PLAN

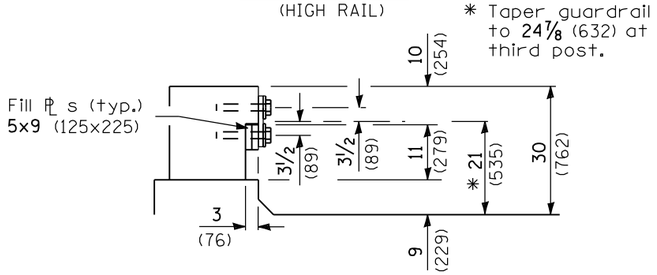

SECTION A-A

(LOW RAIL)

REINFORCED CONCRETE HANDRAIL

GENERAL NOTES

See standard 630001 or details of guardrail not shown.

* * * After tightening, cut the anchor bolts flush with nuts, and damage the bolt head to prevent it from loosening.

All dimensions are in inches (millimeters) unless otherwise shown.

Illinois Department of Transportation

PASSED January 1, 2009
ENGINEER OF POLICY AND PROCEDURES
APPROVED January 1, 2009
ENGINEER OF DESIGN AND ENVIRONMENT

ISSUED 1-1-97

DATE	REVISIONS
1-1-09	Switched units to English (metric).
1-1-07	Changes adopted to implement the Midwest Guardrail System.

TRAFFIC BARRIER TERMINAL, TYPE 10

STANDARD 631046-04

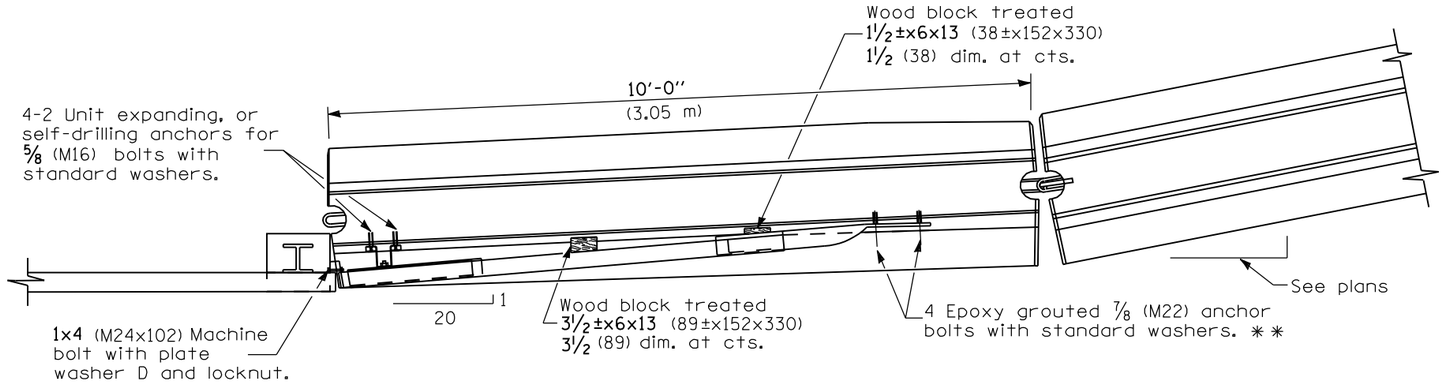

PLAN

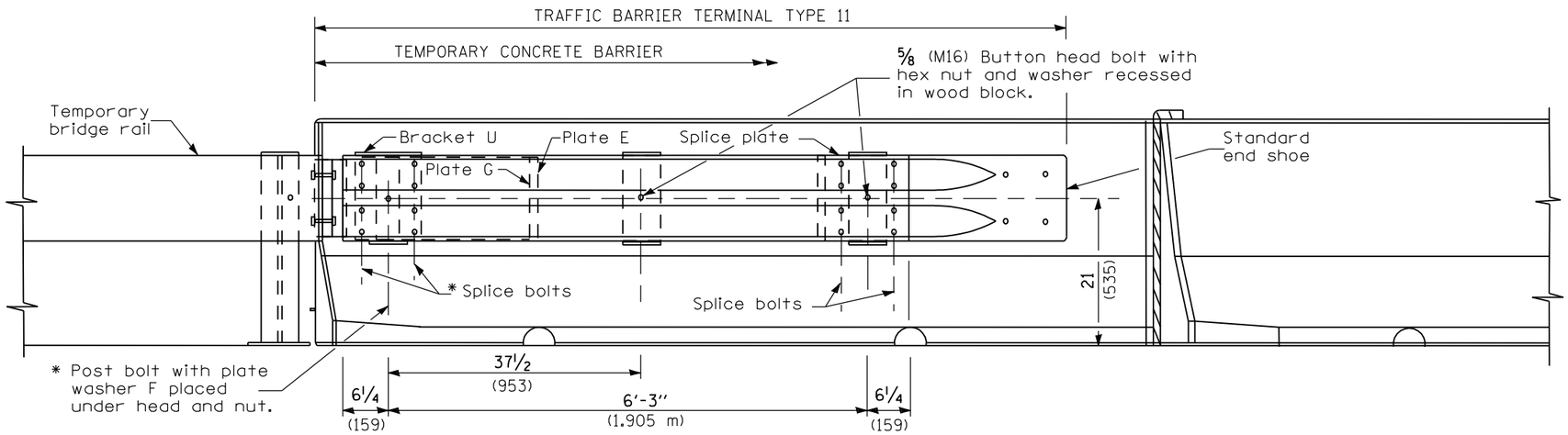

ELEVATION

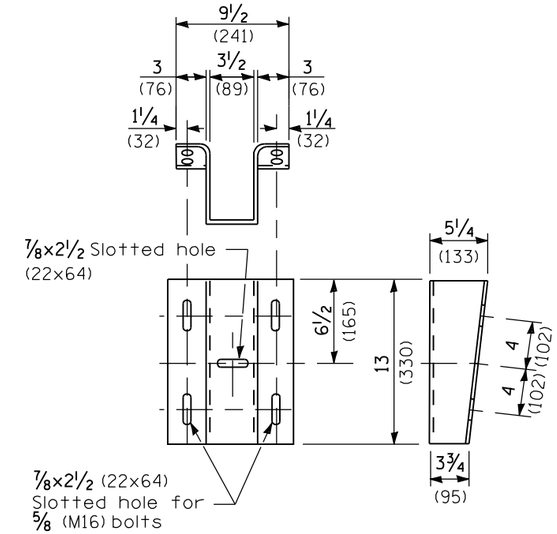

BRACKET U

(¼ (6) Thick steel plate or rectangular tubing with flange welded on.)

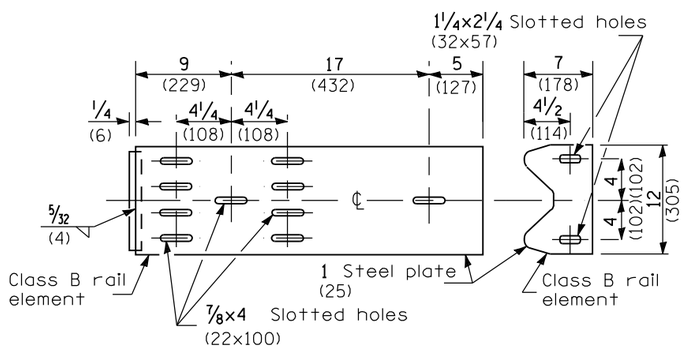

PLATE G

(Place between the rail element and Plate E)

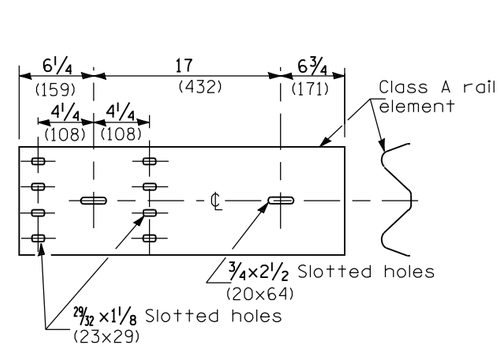

PLATE E

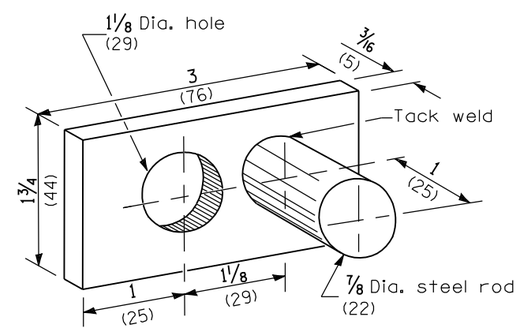

PLATE WASHER D

GENERAL NOTES

For details of guardrail not shown, see Standard 630001.

Install the face of the guardrail flush with the face of the temporary bridge rail. Install plate washer D so that the 1 (25) projection fills the remainder of the slotted holes in the 1 (25) end plate on plate G after the 1 (M24) diameter bolts are in place.

* Bolts shall be provided with a lock nut or double nut and shall be tightened only to a point that will allow plate G to be free to move.

* * After tightening, cut the anchor bolts flush with nuts, and damage the bolt head to prevent them from loosening.

All dimensions are in inches (millimeters) unless otherwise shown.

Illinois Department of Transportation

PASSED January 1, 2009
ENGINEER OF POLICY AND PROCEDURES
APPROVED January 1, 2009
ENGINEER OF DESIGN AND ENVIRONMENT

ISSUED 1-1-97

DATE	REVISIONS
1-1-09	Switched units to
	English (metric).
1-1-02	Revised M22 (7/8) Bolts.

TRAFFIC BARRIER TERMINAL TYPE 11

STANDARD 631051-02

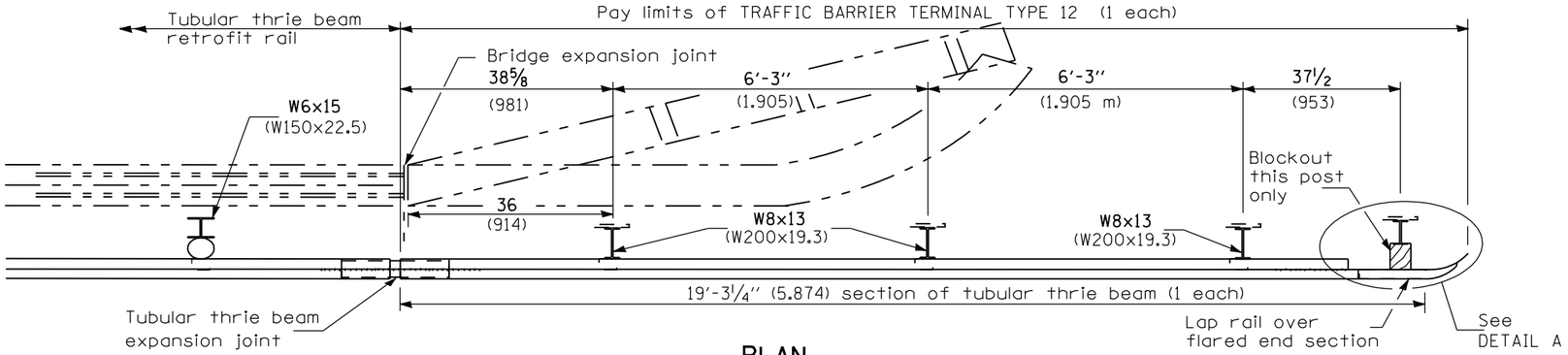

PLAN

(Bridge with expansion joint shown)

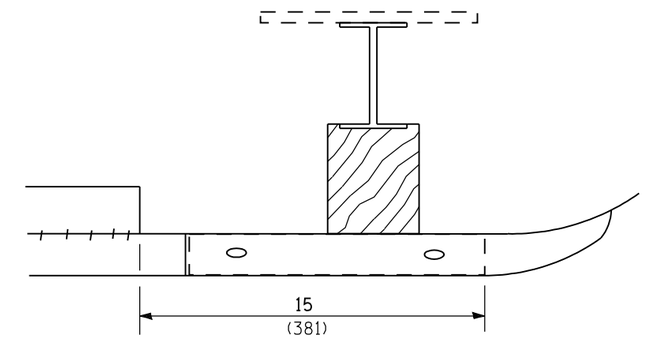

DETAIL A

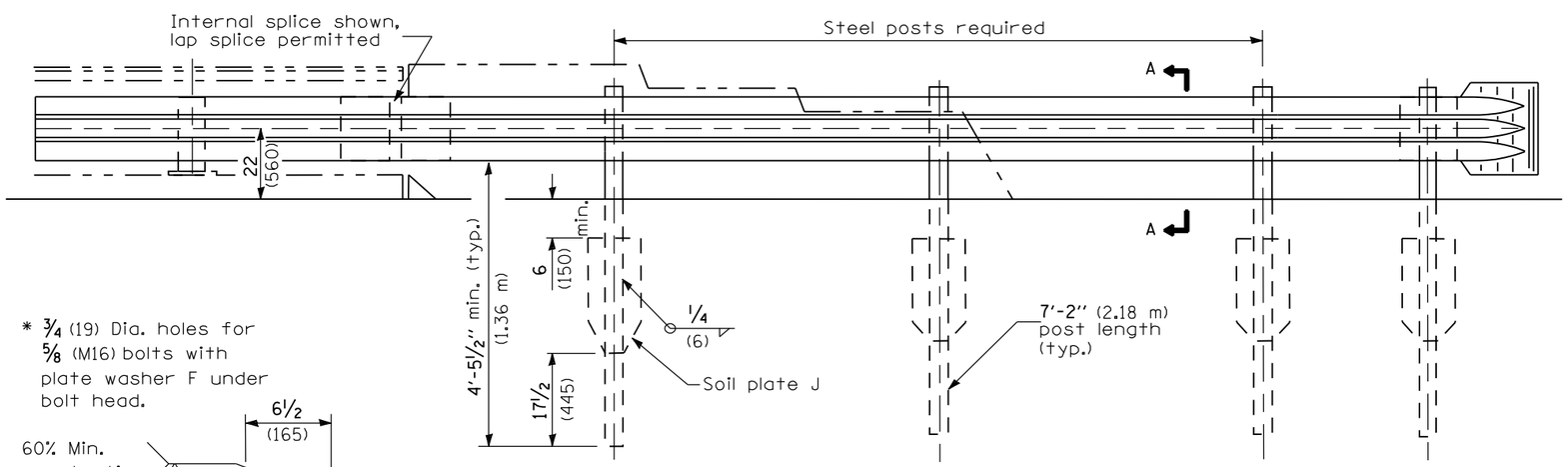

ELEVATION

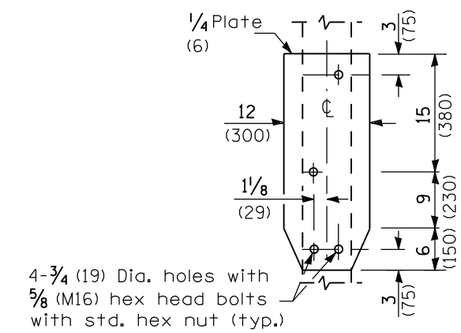

SOIL PLATE J & ALTERNATE CONNECTION DETAILS

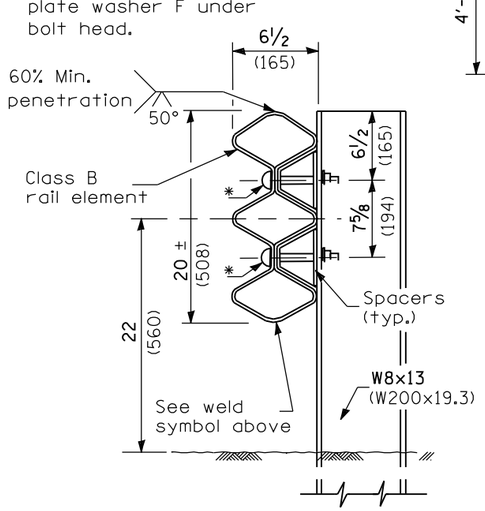

SECTION A-A

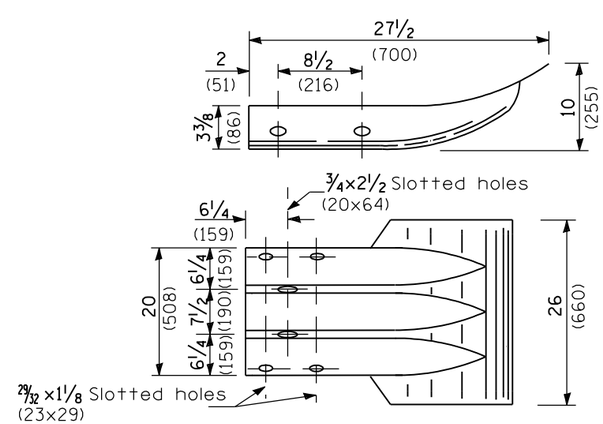

THRIE BEAM FLARED END SECTION

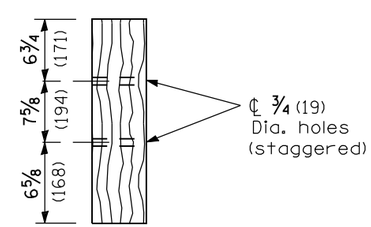

DETAIL of BLOCK-OUT

(1 each)

GENERAL NOTES

See Standard 509001 and 630001 for details of guardrail elements not shown.

The Type 12 terminal shall be installed after the posts for the bridge retrofit rail have been located as shown on Standard 509001.

All dimensions are in inches (millimeters) unless otherwise shown.

Illinois Department of Transportation

PASSED January 1, 2009
ENGINEER OF POLICY AND PROCEDURES

APPROVED January 1, 2009
ENGINEER OF DESIGN AND ENVIRONMENT

ISSUED 1-1-97

DATE	REVISIONS
1-1-09	Switched units to
	English (metric).
10-1-98	Revised to wooden
	block-out.

TRAFFIC BARRIER TERMINAL TYPE 12

STANDARD 631056-02

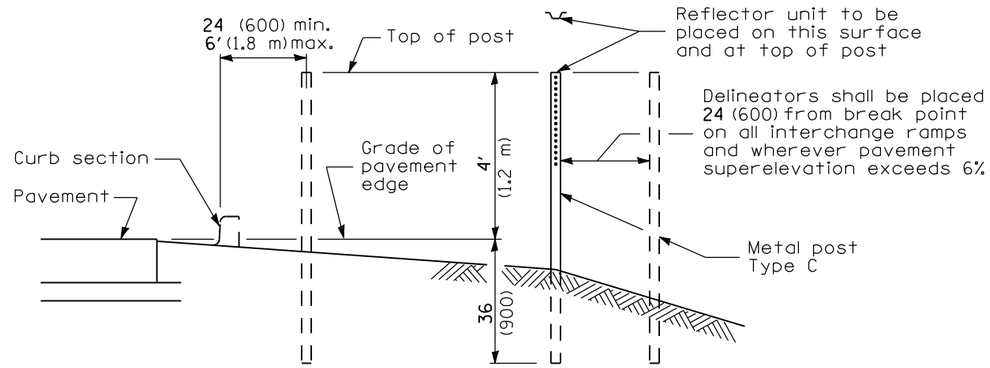

SECTIONAL VIEW

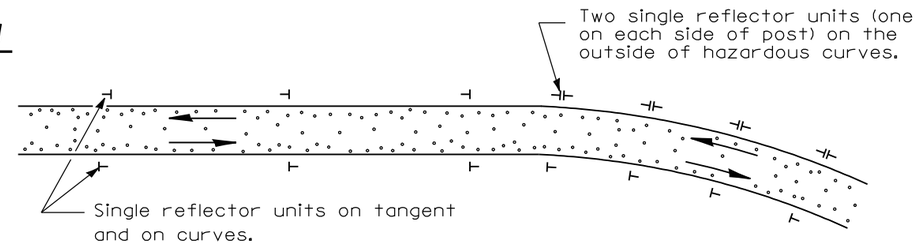

PLAN - TWO-WAY ROADWAYS

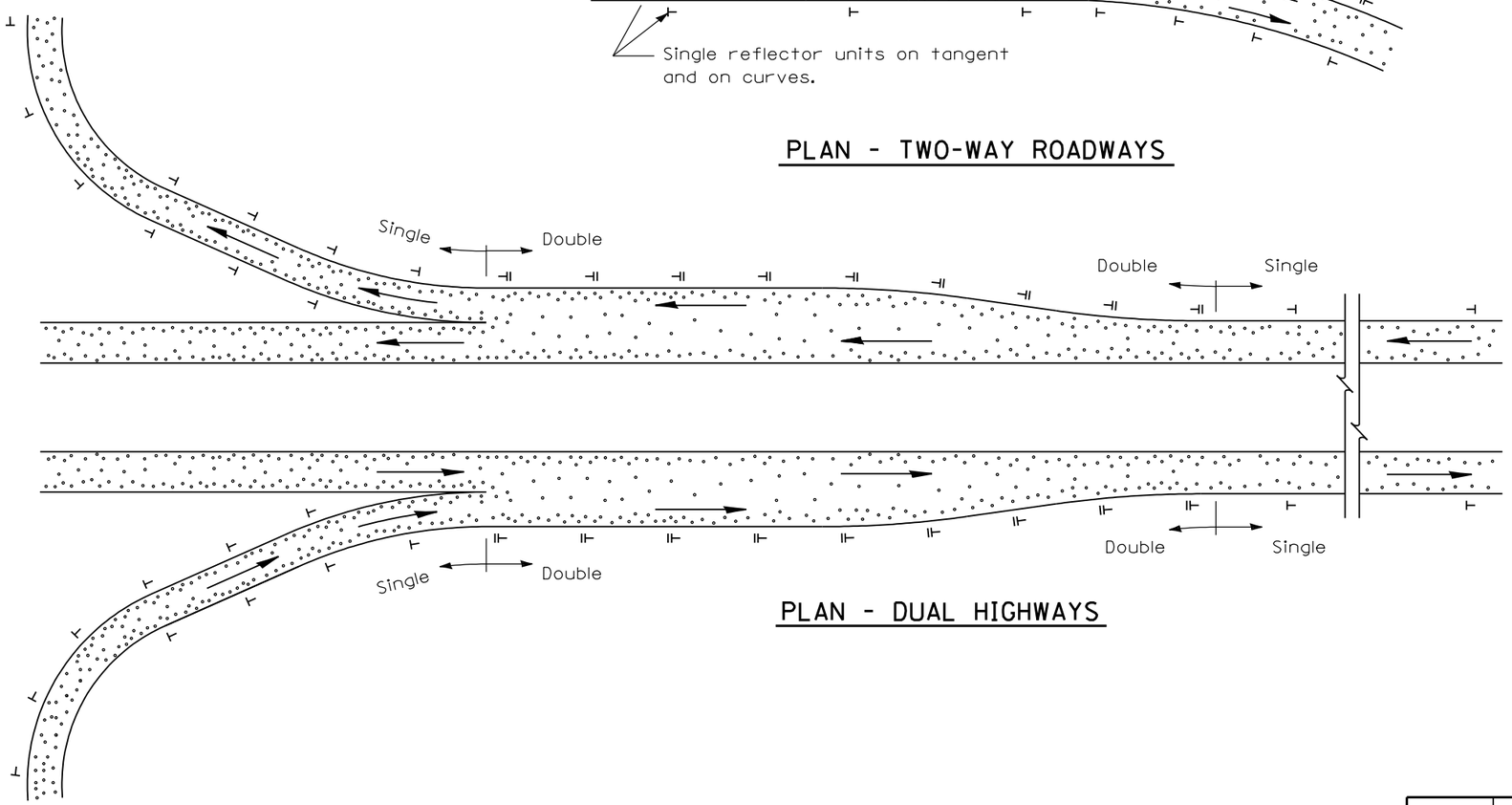

PLAN - DUAL HIGHWAYS

SPACING FOR DELINEATORS ON HORIZONTAL CURVES

Radius of Curve Feet (m)	Spacing on Curve Feet (m)	Spacing in Advance and Beyond Curve Feet (m) 1st. Space	2nd. Space	3rd. Space
Less than 100 (30)	20 (5)	40 (10)	65 (20)	125 (40)
100 - 174 (30 - 54)	30 (10)	60 (20)	90 (25)	180 (55)
175 - 224 (55 - 69)	35 (10)	70 (20)	110 (35)	200 (60)
225 - 274 (70 - 84)	40 (10)	85 (25)	125 (40)	200 (60)
275 - 349 (85 - 104)	50 (15)	95 (30)	145 (45)	200 (60)
350 - 449 (105 - 134)	55 (15)	110 (35)	170 (50)	200 (60)
450 - 549 (135 - 164)	65 (20)	125 (40)	190 (60)	200 (60)
550 - 649 (165 - 199)	70 (20)	140 (45)	200 (60)	200 (60)
650 - 749 (200 - 229)	75 (25)	150 (45)	200 (60)	200 (60)
750 - 849 (230 - 259)	80 (25)	165 (50)	200 (60)	200 (60)
850 - 949 (260 - 289)	85 (25)	175 (55)	200 (60)	200 (60)
950 - 1049 (290 - 319)	90 (25)	185 (55)	200 (60)	200 (60)
1050 - 1299 (320 - 394)	100 (30)	200 (60)	200 (60)	200 (60)
1300 - 1999 (395 - 609)	125 (40)	200 (60)	200 (60)	300 (90)
2000 - 2999 (610 - 914)	150 (45)	200 (60)	200 (60)	300 (90)
3000 - 3999 (915 - 1219)	175 (55)	200 (60)	300 (90)	300 (90)
4000 or greater (1220)	400 (120)	400 (120)	400 (120)	400 (120)

GENERAL NOTES

Delineators on tangent sections of main line roadways shall be placed at 400′ (120 m) spacing. Delineators on ramps and acceleration and deceleration lanes shall be placed at a maximum spacing of 100′ (30 m).

Refer to Standard 720011 for details of metal post.

Double reflector units shall be used on the outside of all acceleration and deceleration lanes. Single reflector units shall be used on ramps. Delineators shall be used on outside of all curved sections of ramps.

All dimensions are in inches (millimeters) unless otherwise shown.

Illinois Department of Transportation

PASSED January 1, 2009
ENGINEER OF POLICY AND PROCEDURES
APPROVED January 1, 2009
ENGINEER OF DESIGN AND ENVIRONMENT

ISSUED 1-1-97

DATE	REVISIONS
1-1-09	Switched units to
	English (metric).
	Revised notes.
1-1-97	Renum. Standard 2149-12.

DELINEATORS

STANDARD 635001-01

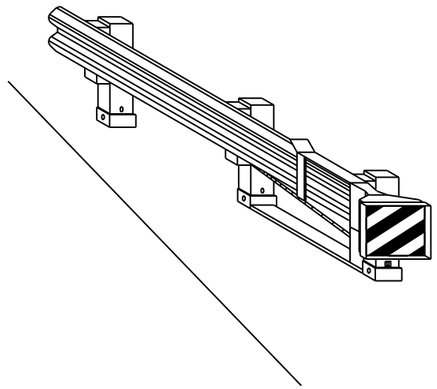

CASE I

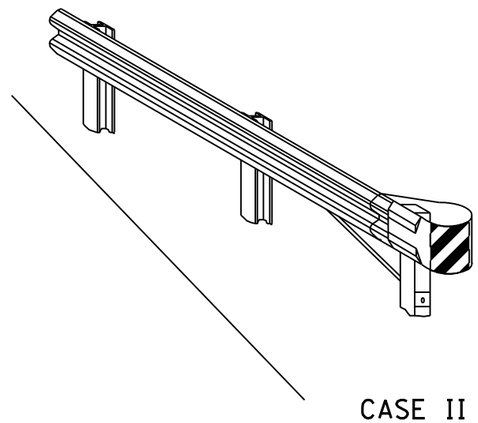

CASE II

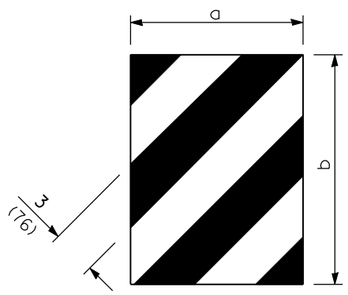

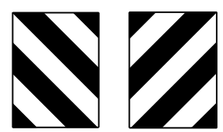

DIMENSION	CASE I	CASE II
a	*	18 (450)
b	*	16 (406)

* The width and height (a, b) of the terminal marker shall be within approximately 1 (25) of the outer edge of the terminal end, with a minimum reflective area of 288 sq. in. (0.18 m^2).

TERMINAL MARKER DETAILS

Color: Black / Yellow reflectorized

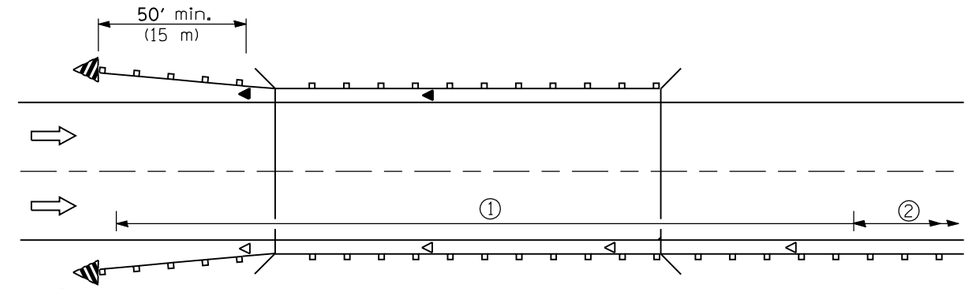

① Spacing **80 ft.** (24 m) max. for first **400 ft.** (122 m) or curve spacing shown in Standard 635001, whichever is less (min. 4 reflectors regardless of length).

② After **400 ft.** (122 m), transition to normal delineator spacing shown in Standard 635001, and continue as required.

ONE-WAY TRAFFIC

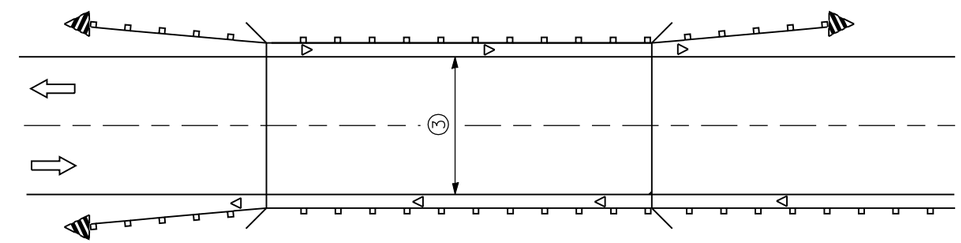

③ Bidirectional silver/silver should be used in lieu of monodirectional silver on both sides of two-lane bridges where the pavement is less than **24** (610) wider than the pavement approaching the bridge.

◁ Monodirectional crystal

◀ Monodirectional amber

Terminal Marker - Black/Yellow Left or Right as appropriate

TWO-WAY TRAFFIC

GUARDRAIL / BARRIER WALL / BRIDGE RAIL REFLECTIORS

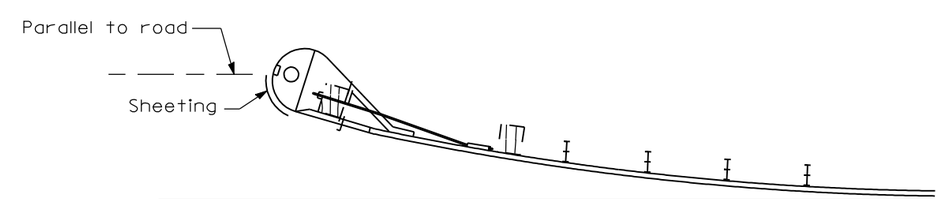

SHEETING POSITION: CASE II

All dimensions are in inches (millimeters) unless otherwise shown.

Illinois Department of Transportation

APPROVED January 1, 2009
ENGINEER OF OPERATIONS
APPROVED January 1, 2009
ENGINEER OF DESIGN AND ENVIRONMENT

ISSUED 1-1-2000

DATE	REVISIONS
1-1-09	Switched units to English (metric). Changed 'white' to 'crystal' ref.
1-1-02	Revise Case I Dimension and removed alternate detail.

REFLECTOR AND TERMINAL MARKER PLACEMENT

STANDARD 635006-03

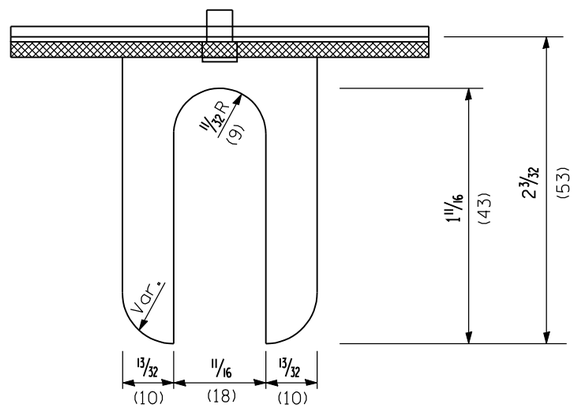

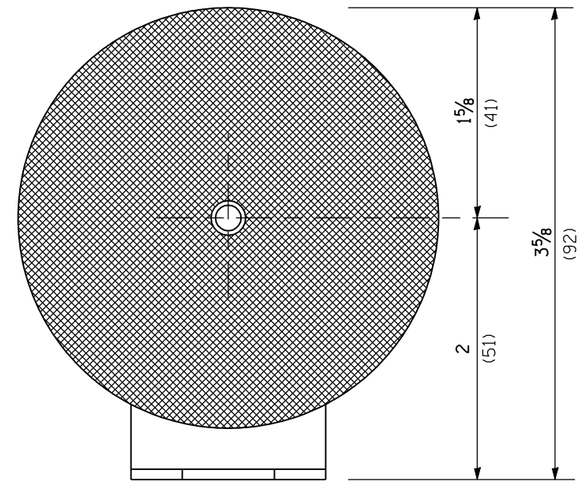

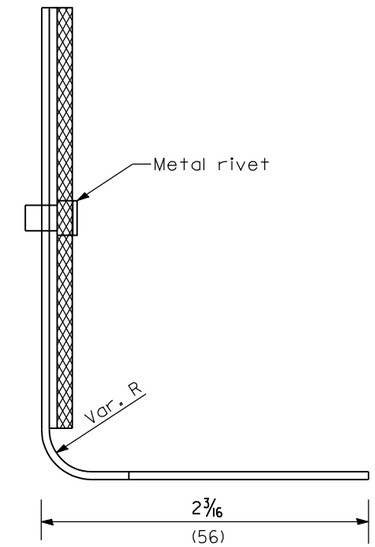

REFLECTOR MARKER TYPE A

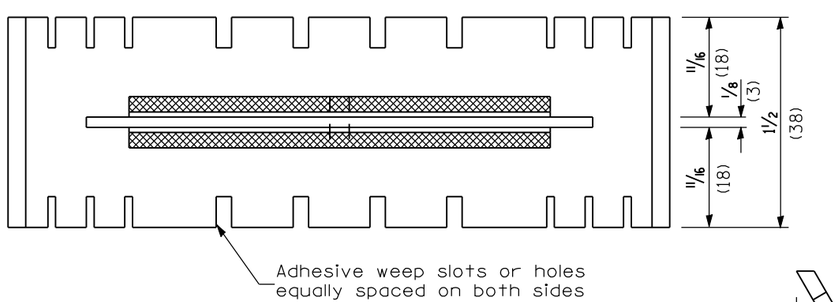

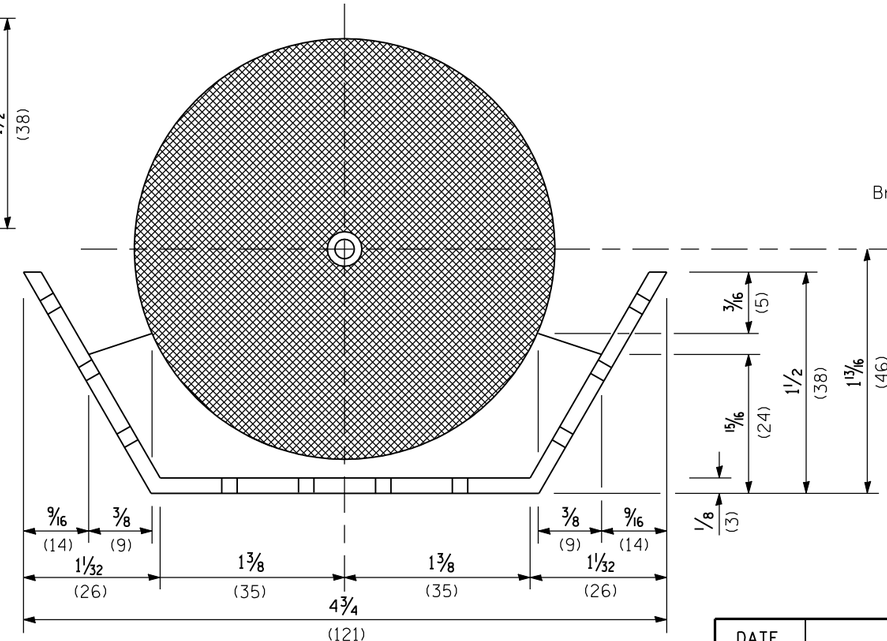

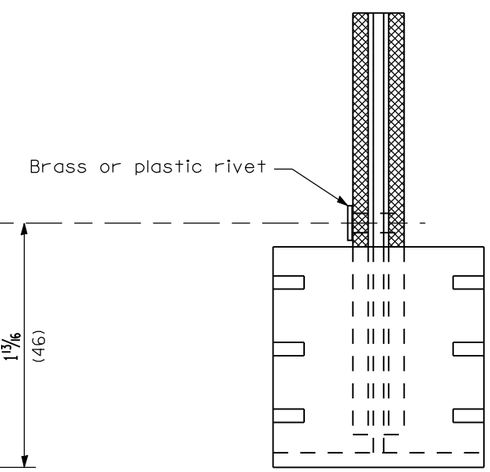

REFLECTOR MARKER TYPE B

All dimensions are in inches (millimeters) unless otherwise shown.

Illinois Department of Transportation

APPROVED January 1, 2009
ENGINEER OF OPERATIONS

APPROVED January 1, 2009
ENGINEER OF DESIGN AND ENVIRONMENT

ISSUED 1-1-2000

DATE	REVISIONS
1-1-09	Switched units to
	English (metric).
1-1-01	Revised signature block.

REFLECTOR MARKER AND MOUNTING DETAILS

(Sheet 1 of 3)

STANDARD 635011-02

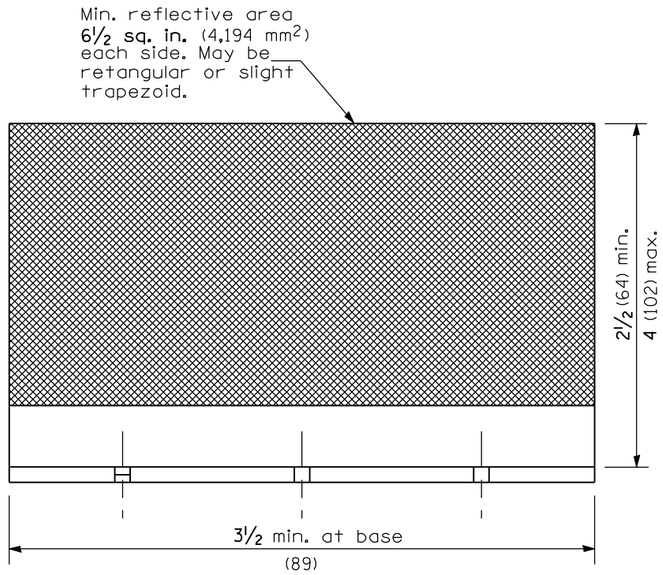

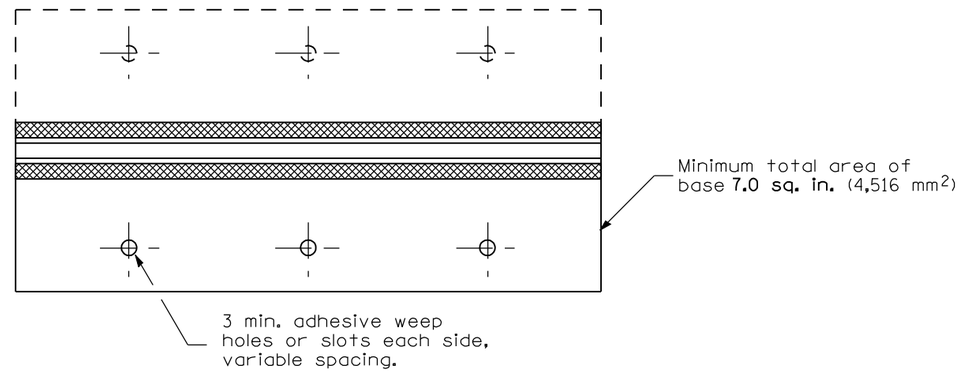

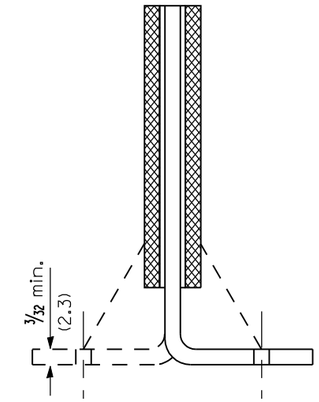

Cross section may be "T"
or "L" shaped and may have
side supports at ends.

REFLECTOR MARKER TYPE C

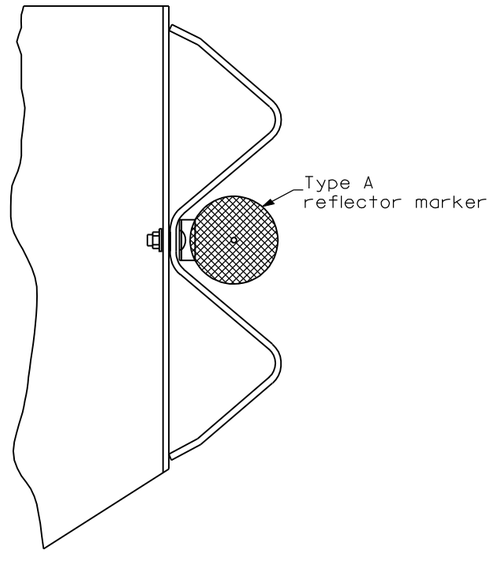

TYPICAL MOUNTING WITH REFLECTOR

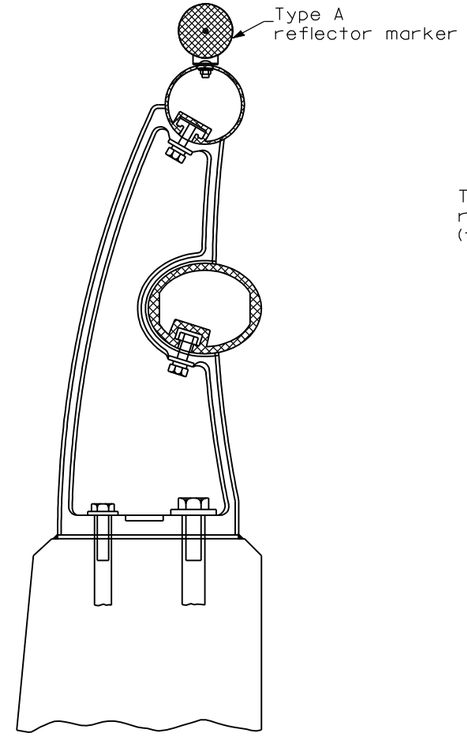

TYPICAL MOUNTING DETAIL
FOR BRIDGE RAIL REFLECTOR

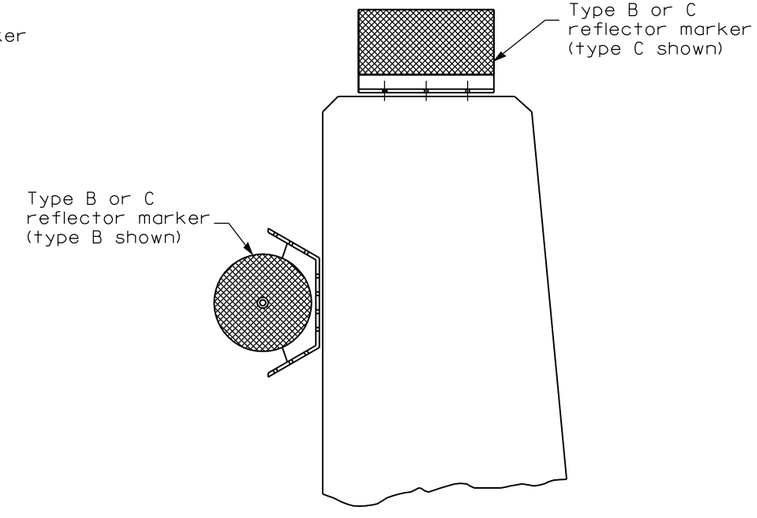

TYPICAL MOUNTING DETAIL
FOR BARRIER WALL REFLECTOR

Illinois Department of Transportation

APPROVED January 1, 2009
ENGINEER OF OPERATIONS
APPROVED January 1, 2009
ENGINEER OF DESIGN AND ENVIRONMENT

ISSUED 1-1-2000

REFLECTOR MARKER AND
MOUNTING DETAILS

(Sheet 2 of 3)

STANDARD 635011-02

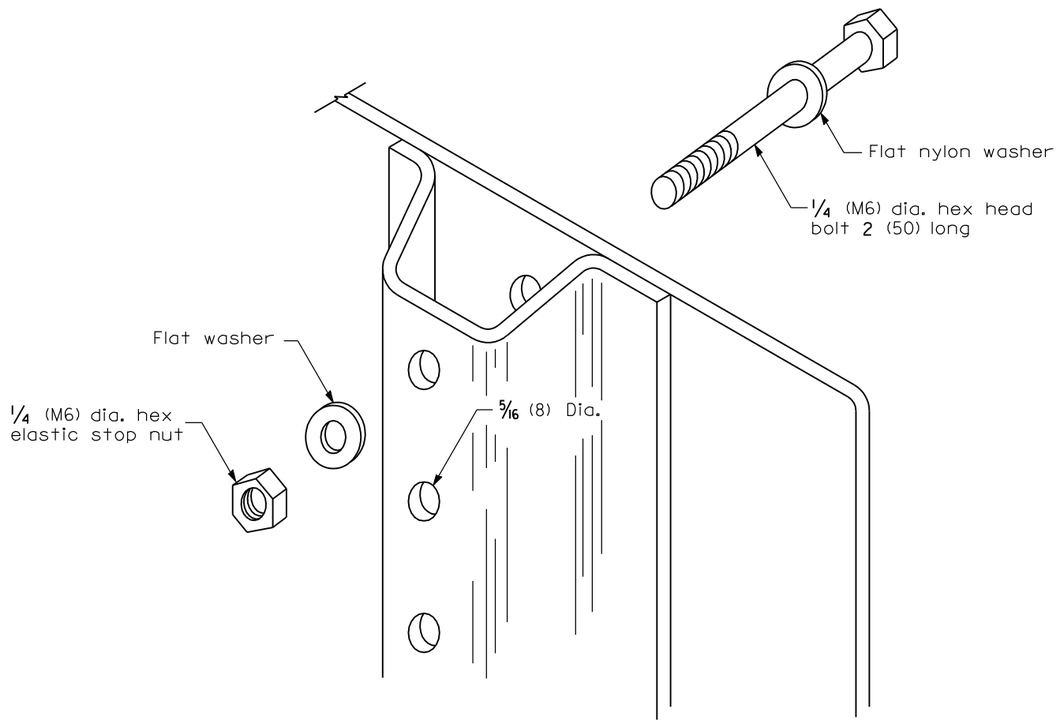

DETAIL OF MOUNTING TERMINAL MARKER TO POST

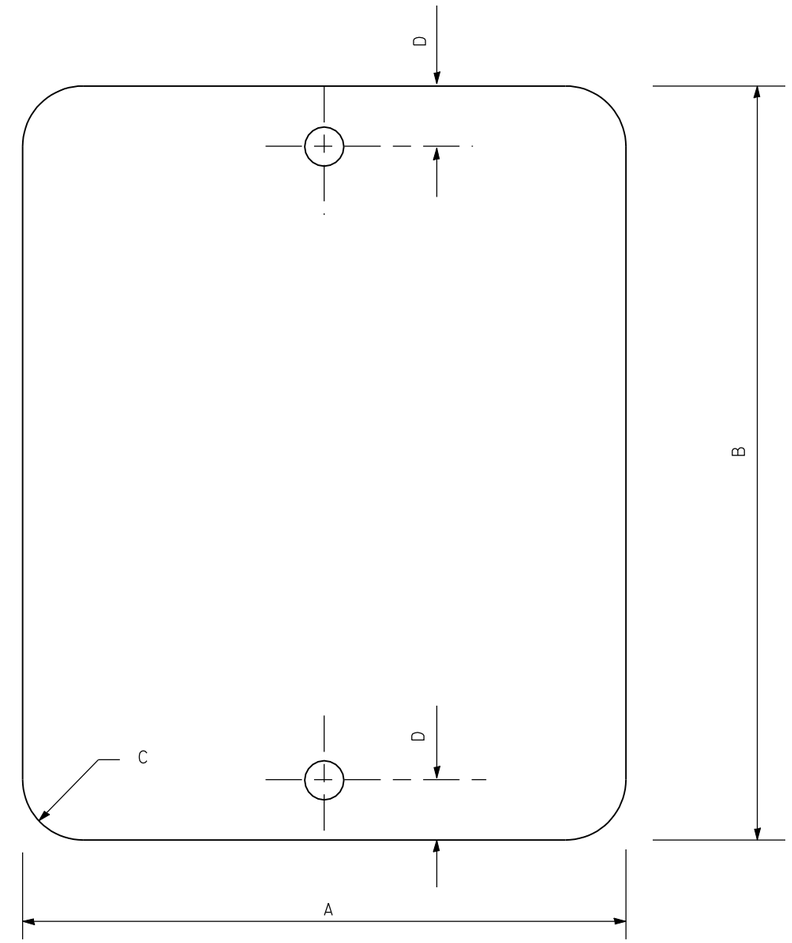

STANDARD TERMINAL MARKER

SIGN SIZE	DIMENSIONS			
	A	B	C	D
12x16 (305x406)	12.0 (305)	16.0 (406)	1.5 (38)	2.0 (50)

Illinois Department of Transportation

APPROVED January 1, 2009
ENGINEER OF OPERATIONS

APPROVED January 1, 2009
ENGINEER OF DESIGN AND ENVIRONMENT

ISSUED 1-1-2000

REFLECTOR MARKER AND MOUNTING DETAILS

(Sheet 3 of 3)

STANDARD 635011-02

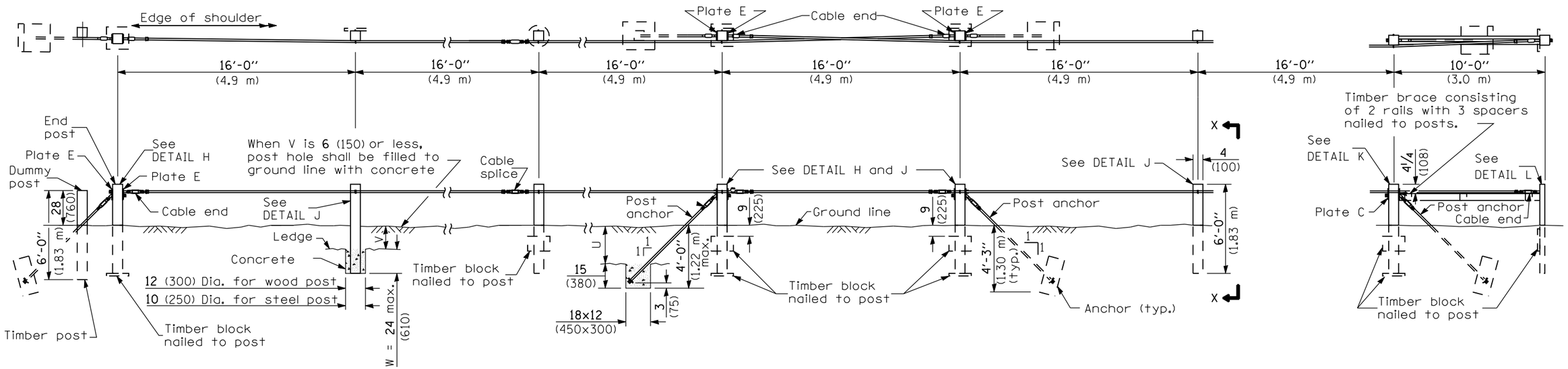

END ANCHOR ARRANGEMENT

TYPICAL FOOTINGS FOR POST AND ANCHOR WHEN IMPERVIOUS MATERIAL IS ENCOUNTERED

INTERMEDIATE ANCHOR ARRANGEMENT

DEAD END ANCHOR ARRANGEMENT

NOTES

V + W shall not exceed 39 (990). When V is 0 to 15 (380), W = 24 (610), and posts shall be shortened as required. When V exceeds 15 (380), W shall be shortened correspondingly.

T = 15 (380) when U is 33 (840) or less. When U exceeds 33 (840) the impervious material shall be removed and the standard anchor shall be used.

Timber blocks shall be nailed to each wood post on the concave side of curve for curves having a radius of less than 600' (180 m).

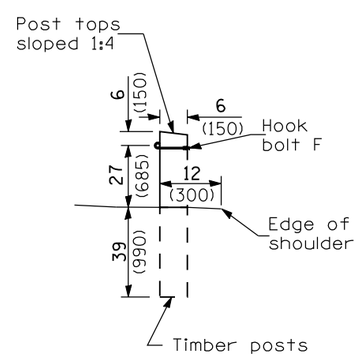

VIEW X-X

Typical Wood Materials	
Item	Size
Post	4x4x6'-0" (100x150x1.83 m)
Block	2x12x18 (50x300x450)
Rail	2x6 (50x150)
Spacer	2x6x6 (50x150x150)

GENERAL NOTES

The Engineer will determine the stability of the impervious material for anchoring.

All slope ratios are expressed as units of vertical displacement to units of horizontal displacement (V:H).

All dimensions are in inches (millimeters) unless otherwise shown.

Illinois Department of Transportation

PASSED January 1, 2009
ENGINEER OF POLICY AND PROCEDURES
APPROVED January 1, 2009
ENGINEER OF DESIGN AND ENVIRONMENT

ISSUED 1-1-97

DATE	REVISIONS
1-1-09	Switched units to Eng.
	(met.). omitted precast
	deadman and gen. note.
1-1-05	Corrected note on Post
	Anchor detail on sheet
	3 of 3.

CABLE ROAD GUARD SINGLE STRAND

(Sheet 1 of 3)

STANDARD 636001-02

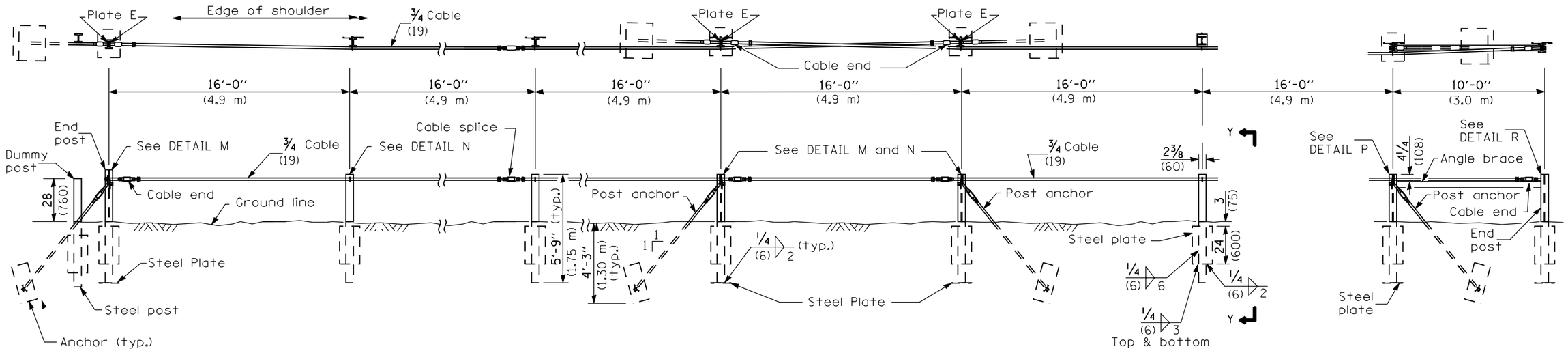

END ANCHOR ARRANGEMENT

INTERMEDIATE ANCHOR ARRANGEMENT

DEAD END ANCHOR ARRANGEMENT

TYPICAL STEEL MATERIALS	
Item	Size
Post	S3x5.7x5'-9" (S75x8.5x1.75 m)
Bottom Plate	1/4x8x8 (6x200x200)
Side Plate	1/4x8x24 (6x200x600)
Brace	L 4x3x3/8 (L 102x76x9.5)

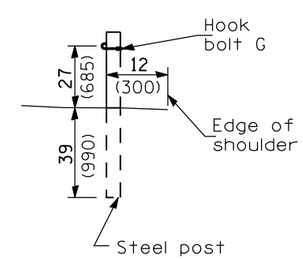

VIEW Y-Y

Illinois Department of Transportation

PASSED January 1, 2009
ENGINEER OF POLICY AND PROCEDURES

APPROVED January 1, 2009
ENGINEER OF DESIGN AND ENVIRONMENT

ISSUED 1-1-97

CABLE ROAD GUARD SINGLE STRAND

(Sheet 2 of 3)

STANDARD 636001-02

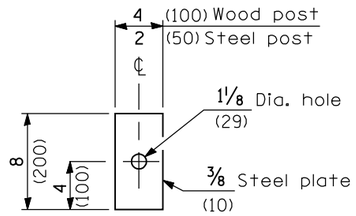

PLATE C

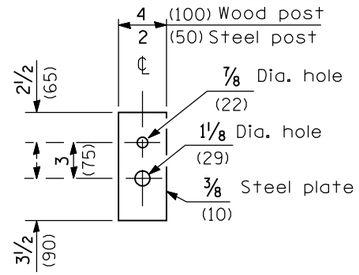

PLATE E

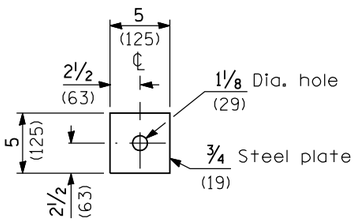

PLATE B

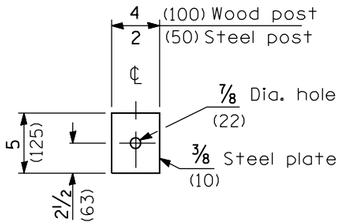

PLATE D

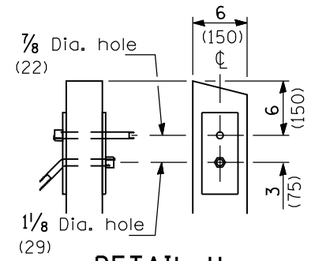

DETAIL H

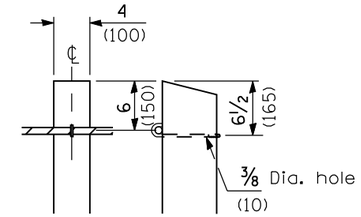

DETAIL J

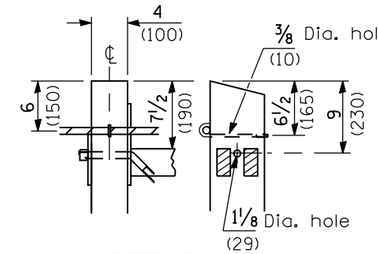

DETAIL K

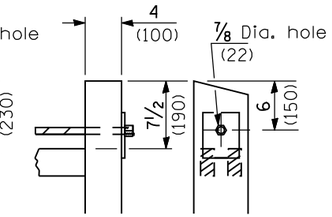

DETAIL L

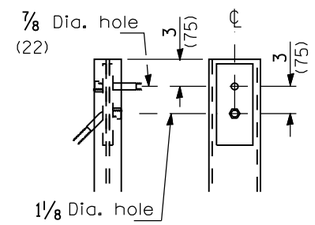

DETAIL M

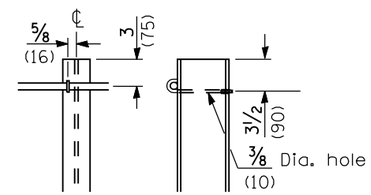

DETAIL N

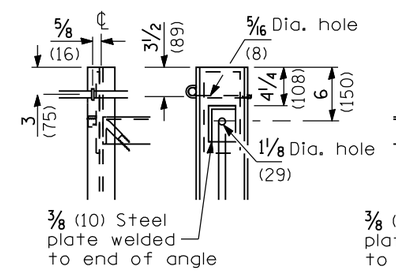

DETAIL P

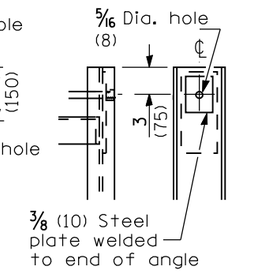

DETAIL R

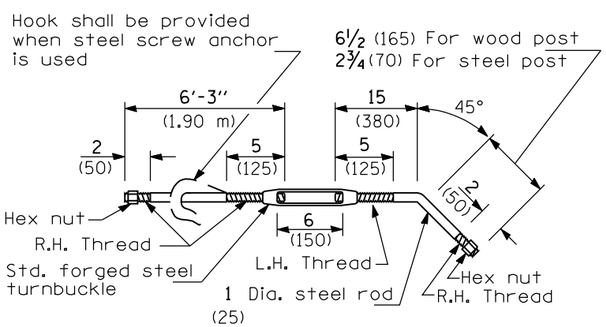

POST ANCHOR

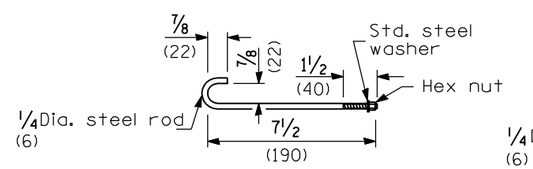

HOOK BOLT F

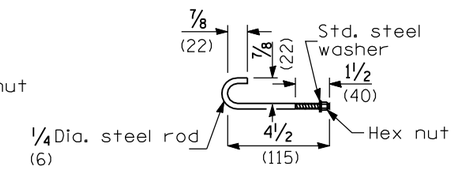

HOOK BOLT G

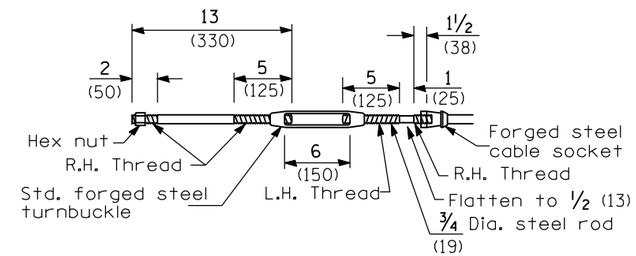

CABLE END

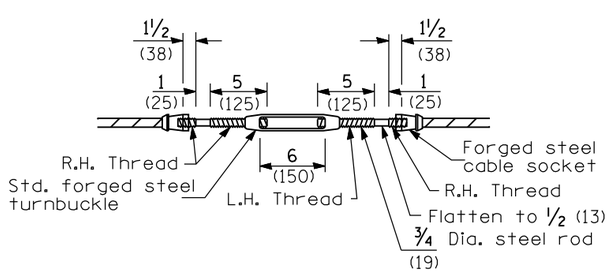

CABLE SPLICE

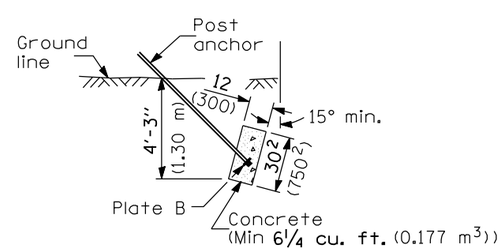

CAST IN PLACE DEADMAN

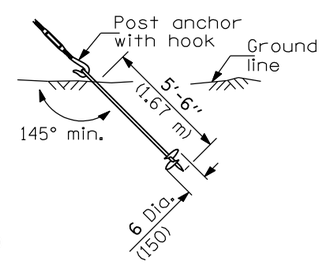

STEEL SCREW

ALTERNATE - ANCHORS

Illinois Department of Transportation

PASSED January 1, 2009
ENGINEER OF POLICY AND PROCEDURES
APPROVED January 1, 2009
ENGINEER OF DESIGN AND ENVIRONMENT

ISSUED 1-1-97

CABLE ROAD GUARD SINGLE STRAND

(Sheet 3 of 3)

STANDARD 636001-02

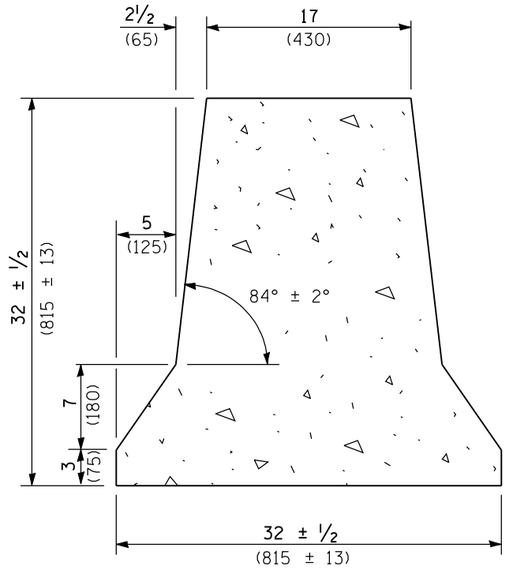

TYPICAL CROSS-SECTION

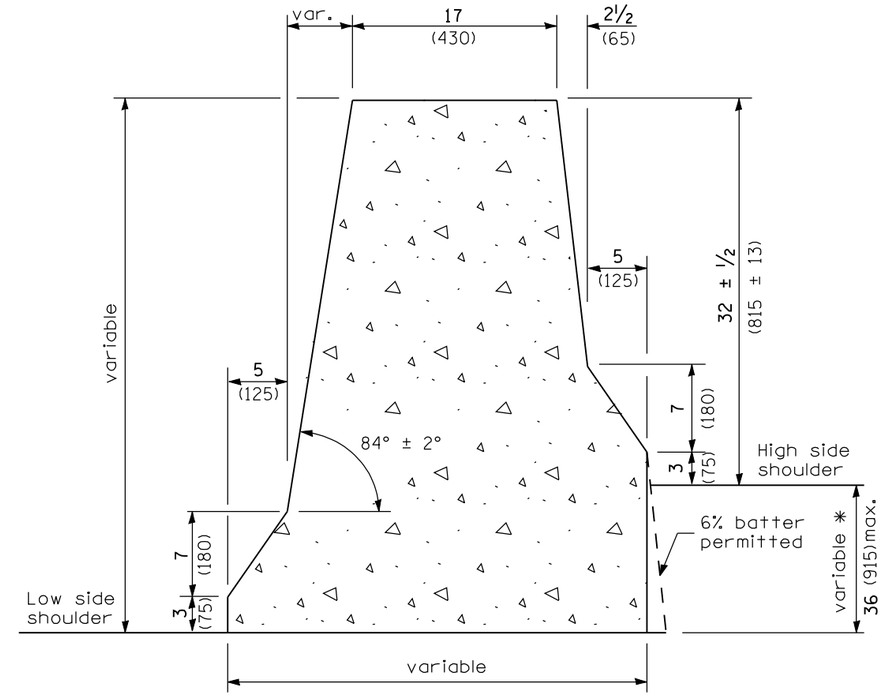

VARIABLE CROSS-SECTION

* When this dimension exceeds 12 (300), the barrier may be cast in two pours. No. 6 x 12 (No. 19 x 300) tie bars at 30 (760) centers, or a suitable keyway, shall be used between the pours.

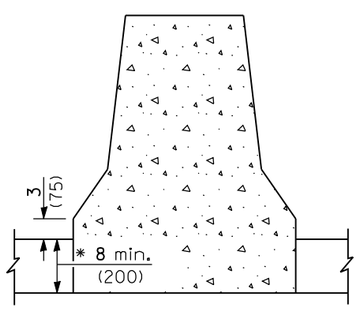

NEW MONOLITHIC
PCC BASE

* This dimension shall be 10 (250) minimum when the barrier is confined by earth.

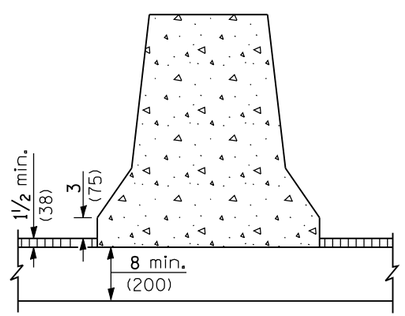

NEW OR EXISTING
BIT./PCC BASE
WITH OVERLAY CONFINEMENT

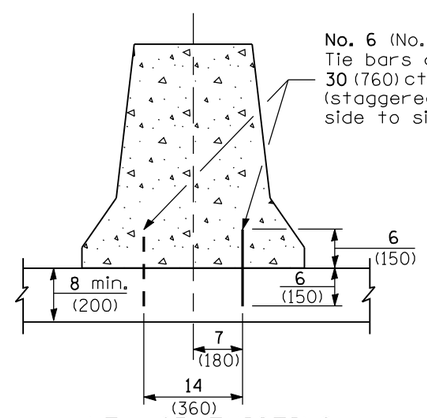

NEW OR EXISTING
PCC BASE

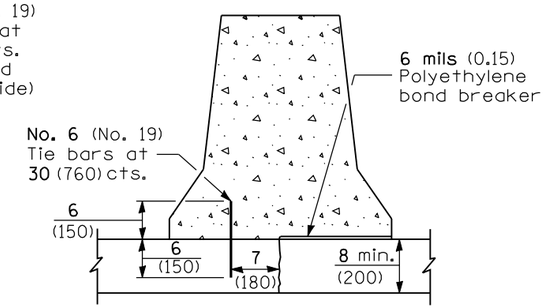

EXISTING PCC BASE
WITH LONGITUDINAL JOINT

ANCHORING METHODS

GENERAL NOTES

The Variable Cross-Section shall be used when there is a difference in elevation between the two sides of the barrier.

When electrical conduits are involved, they shall be located either in the barrier base or in the earth below.

All dimensions are in inches (millimeters) unless otherwise shown.

Illinois Department of Transportation

PASSED January 1, 2009
ENGINEER OF POLICY AND PROCEDURES

APPROVED January 1, 2009
ENGINEER OF DESIGN AND ENVIRONMENT

ISSUED 1-1-97

DATE	REVISIONS
1-1-09	Switched units to English (metric).
1-1-08	Renamed section views.

CONCRETE BARRIER, DOUBLE FACE, 32 in. (815 mm) HEIGHT

(Sheet 1 of 2)

STANDARD 637001-04

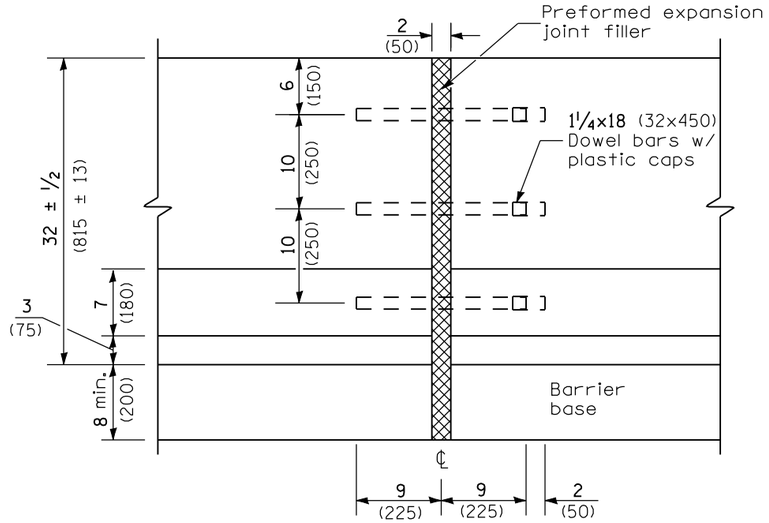

EXPANSION JOINT

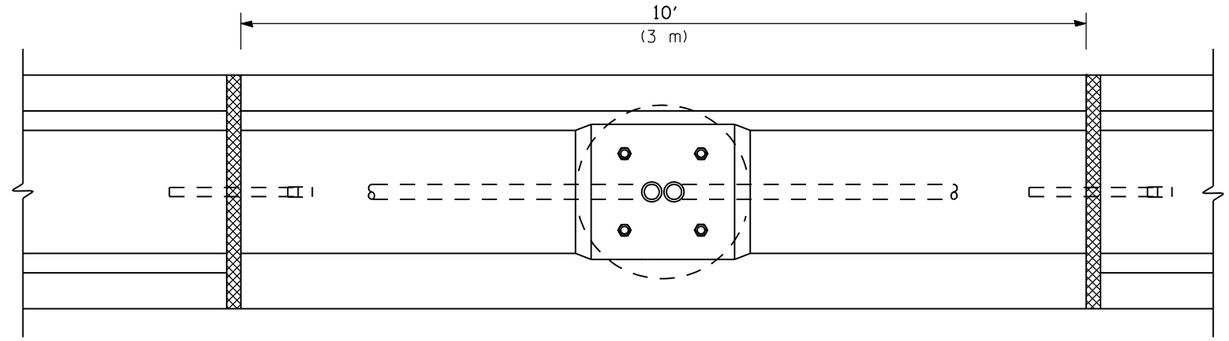

PLAN AT LIGHTING FOUNDATION

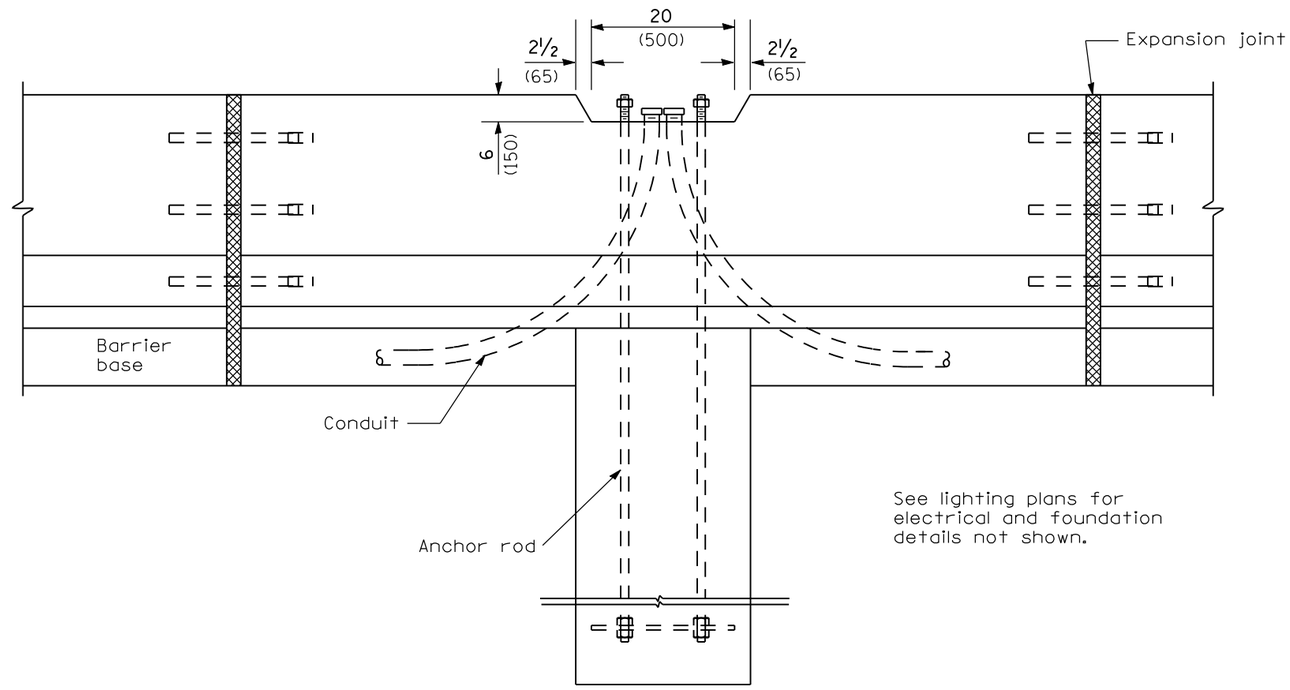

ELEVATION AT LIGHTING FOUNDATION

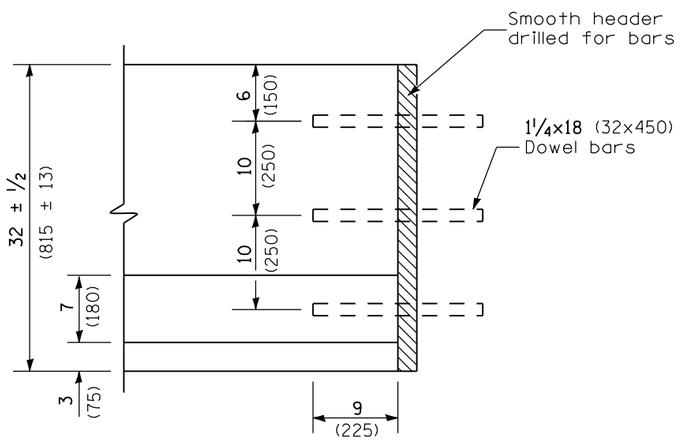

CONSTRUCTION JOINT

Illinois Department of Transportation

PASSED January 1, 2009
ENGINEER OF POLICY AND PROCEDURES
APPROVED January 1, 2009
ENGINEER OF DESIGN AND ENVIRONMENT

ISSUED 1-1-97

CONCRETE BARRIER, DOUBLE FACE, 32 in. (815 mm) HEIGHT
(Sheet 2 of 2)

STANDARD 637001–04

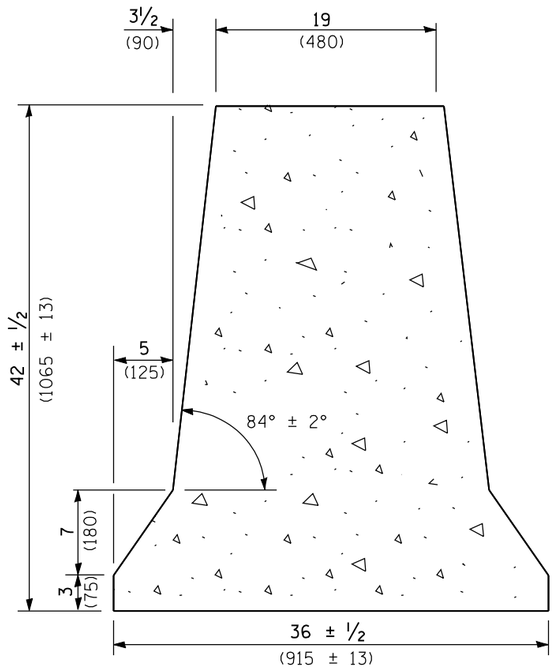

TYPICAL CROSS-SECTION

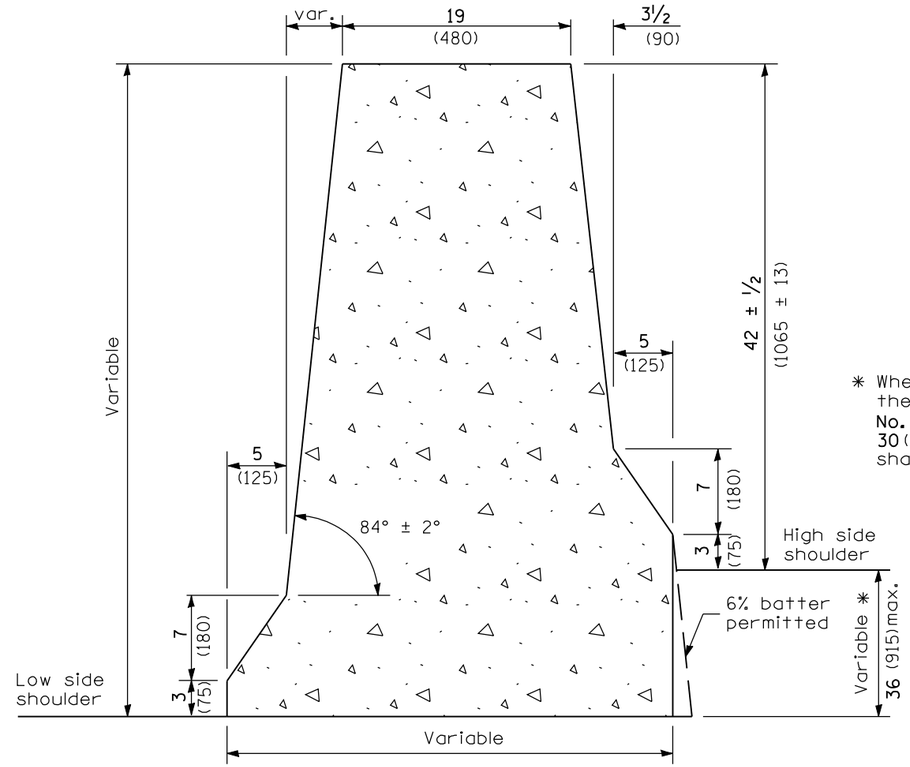

VARIABLE CROSS-SECTION

* When this dimension exceeds 12 (300), the barrier may be cast in two pours. No. 6 x 12 (No. 19 x 300) tie bars at 30 (760) centers, or a suitable keyway, shall be used between the pours.

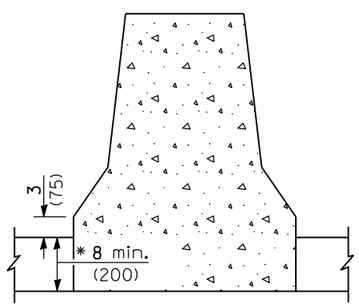

NEW MONOLITHIC PCC BASE

* This dimension shall be 10 (250) minimum when the barrier is confined by earth.

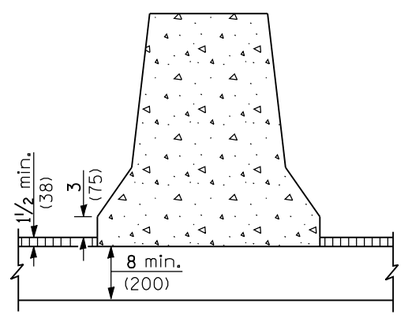

NEW OR EXISTING BIT./PCC BASE WITH OVERLAY CONFINEMENT

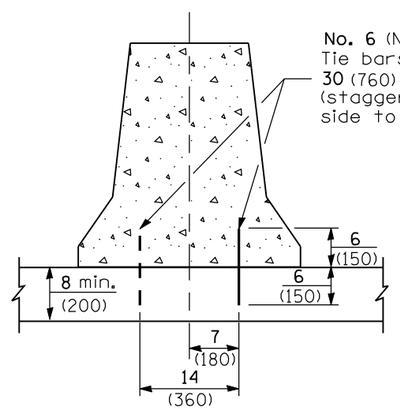

NEW OR EXISTING PCC BASE

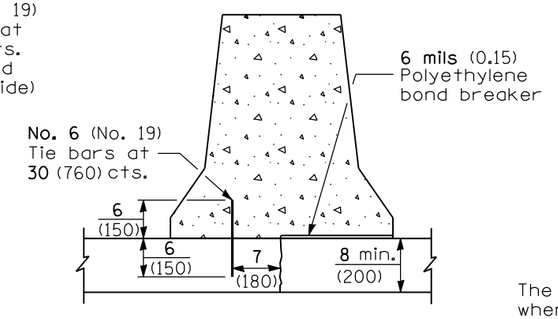

EXISTING PCC BASE WITH LONGITUDINAL JOINT

ANCHORING METHODS

GENERAL NOTES

The Variable Cross-Section shall be used when there is a difference in elevation between the two sides of the barrier.

When electrical conduits are involved, they shall be located either in the barrier base or in the earth below.

All dimensions are in inches (millimeters) unless otherwise shown.

Illinois Department of Transportation

PASSED January 1, 2009
ENGINEER OF POLICY AND PROCEDURES

APPROVED January 1, 2009
ENGINEER OF DESIGN AND ENVIRONMENT

ISSUED 1-1-04

DATE	REVISIONS
1-1-09	Switched units to English (metric).
1-1-08	Renamed section views.

CONCRETE BARRIER, DOUBLE FACE, 42 in. (1065 mm) HEIGHT

(Sheet 1 of 2)

STANDARD 637006-02

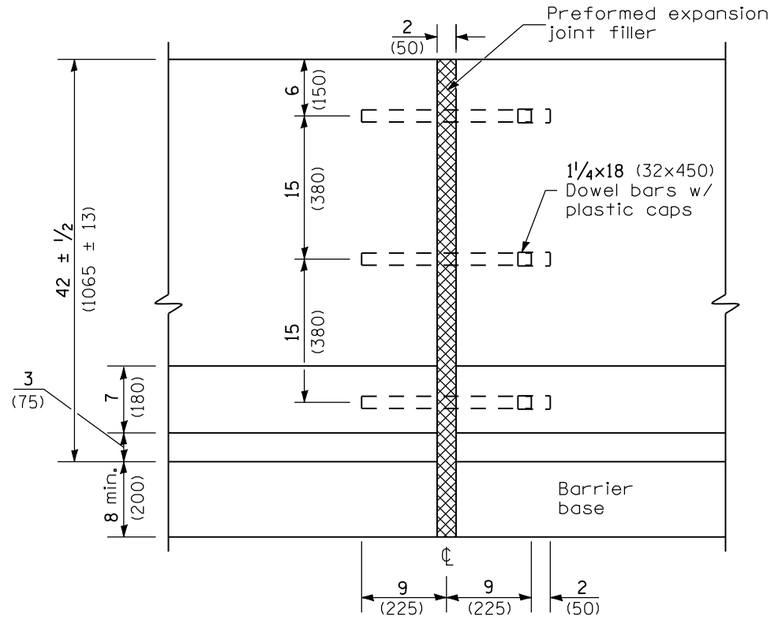

EXPANSION JOINT

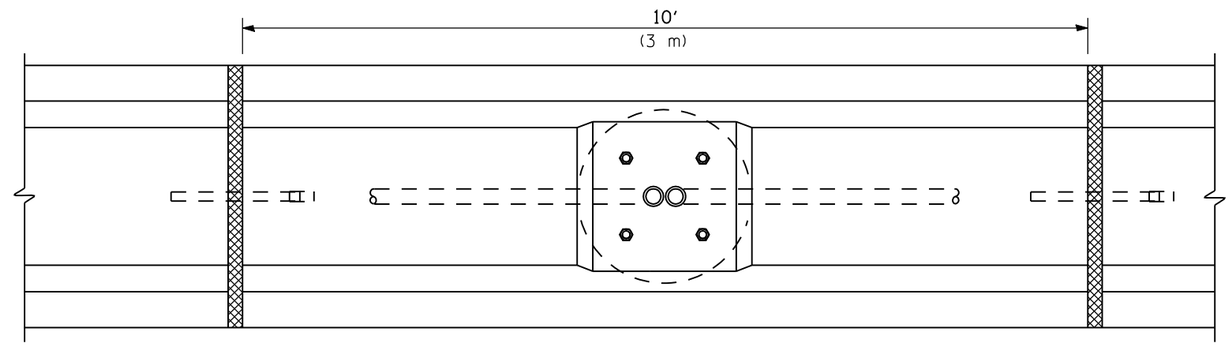

PLAN AT LIGHTING FOUNDATION

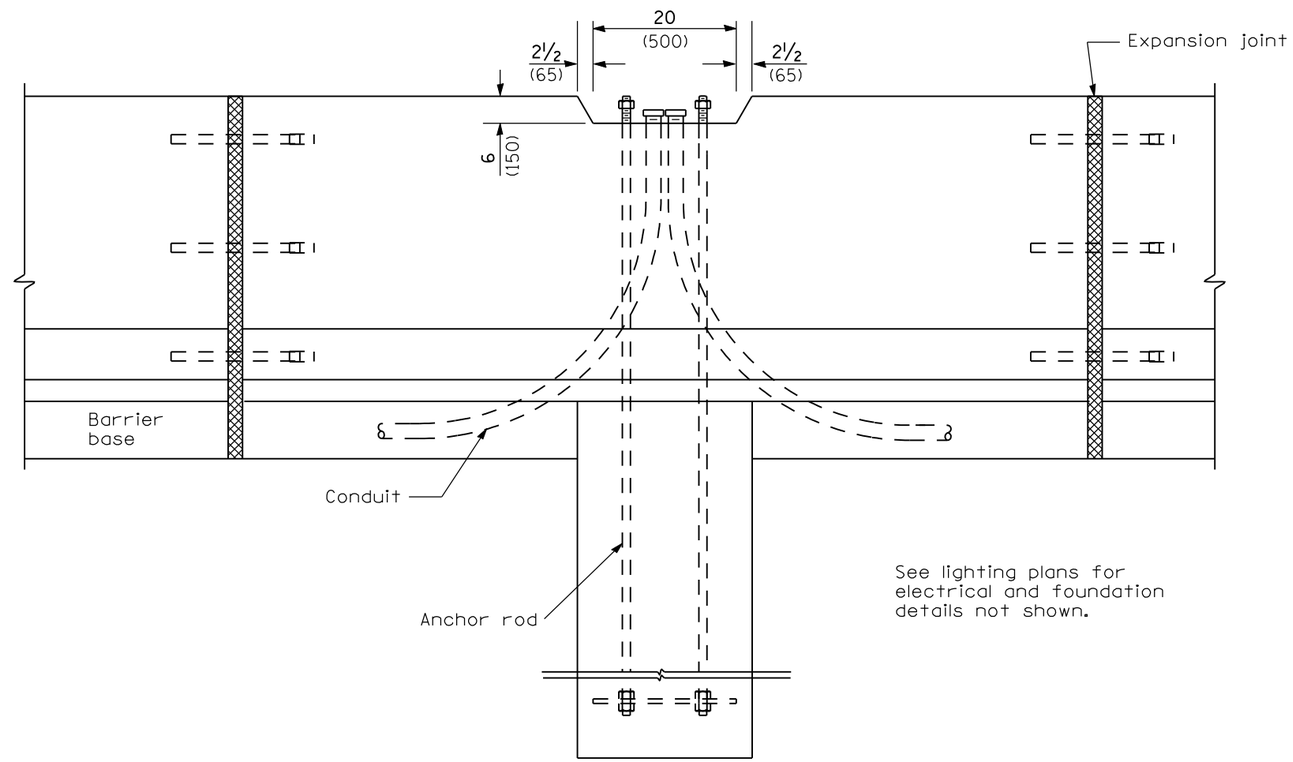

ELEVATION AT LIGHTING FOUNDATION

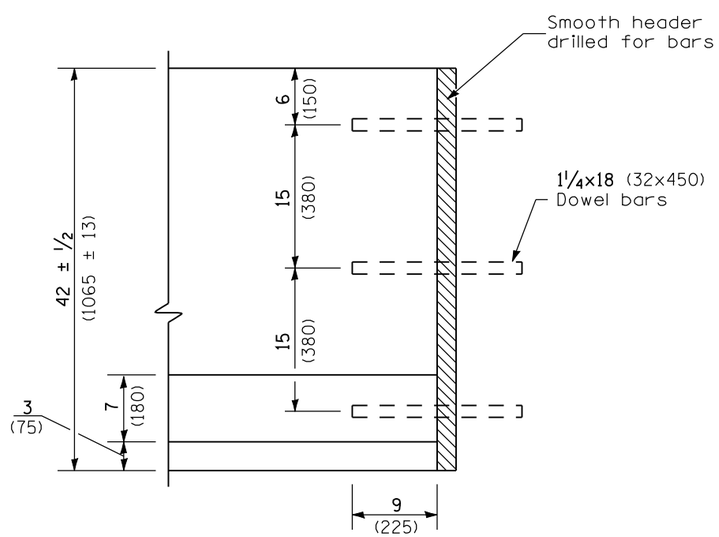

CONSTRUCTION JOINT

Illinois Department of Transportation

PASSED January 1, 2009
ENGINEER OF POLICY AND PROCEDURES

APPROVED January 1, 2009
ENGINEER OF DESIGN AND ENVIRONMENT

ISSUED 1-1-04

CONCRETE BARRIER, DOUBLE FACE, 42 in. (1065 mm) HEIGHT

(Sheet 2 of 2)

STANDARD 637006-02

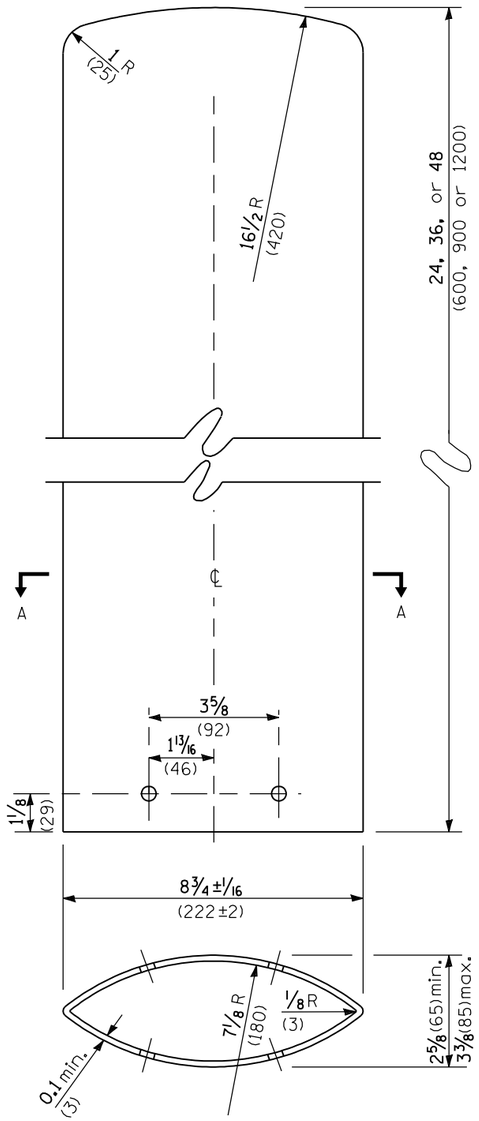

SECTION A-A

BLADE DETAIL

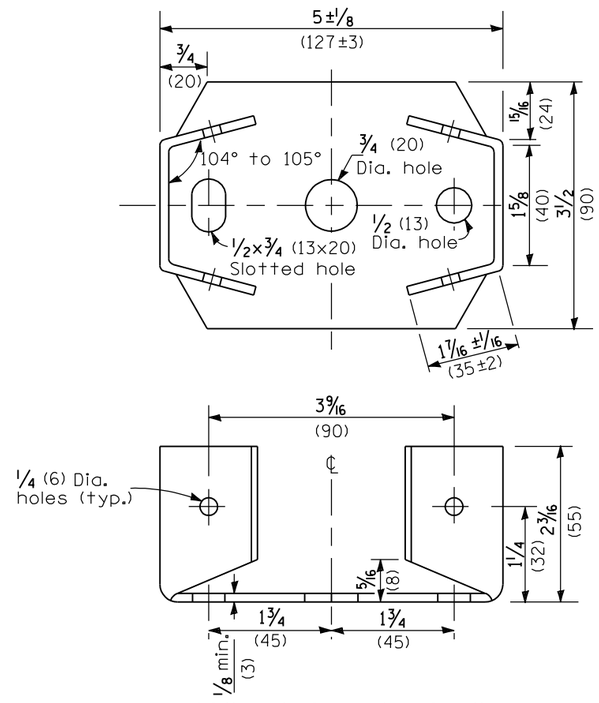

BASE PLATE DETAILS

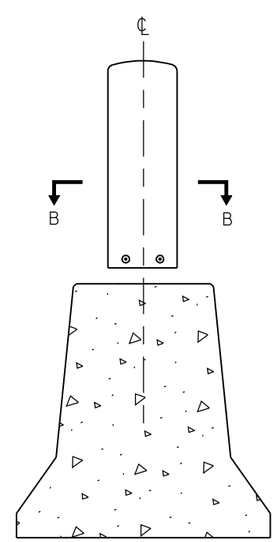

TYPICAL INSTALLATION DETAIL

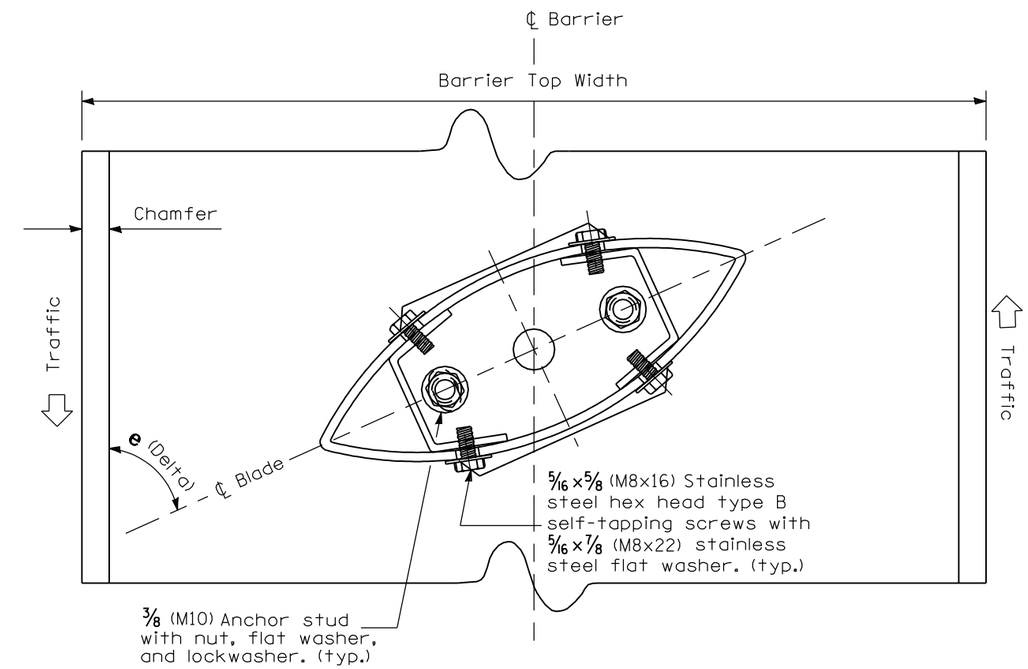

SECTION B-B

MAXIMUM INSTALLATION ANGLE	
Barrier Top Width	△ (Delta)
9 (230)	65°
17 (430)	70°
19 (480)	70°

GENERAL NOTES

The height, spacing, and installation angle of the glare screen blades shall be as shown on the plans.

All dimensions are in inches (millimeters) unless otherwise shown.

Illinois Department of Transportation

PASSED January 1, 2009
ENGINEER OF POLICY AND PROCEDURES

APPROVED January 1, 2009
ENGINEER OF DESIGN AND ENVIRONMENT

ISSUED 1-1-97

DATE	REVISIONS
1-1-09	Switched units to English (metric).
1-1-04	Revised max. installation angles to fit F shape barrier.

GLARE SCREEN BLADES

STANDARD 638001-02

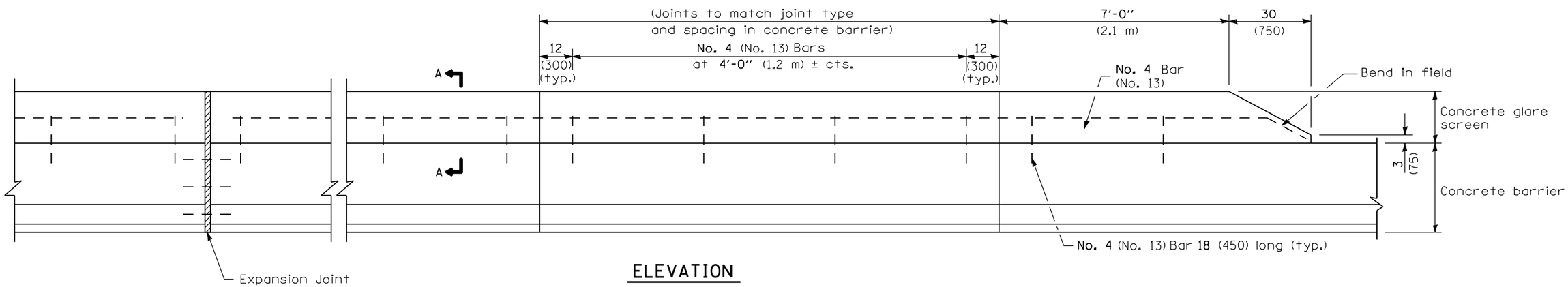

ELEVATION

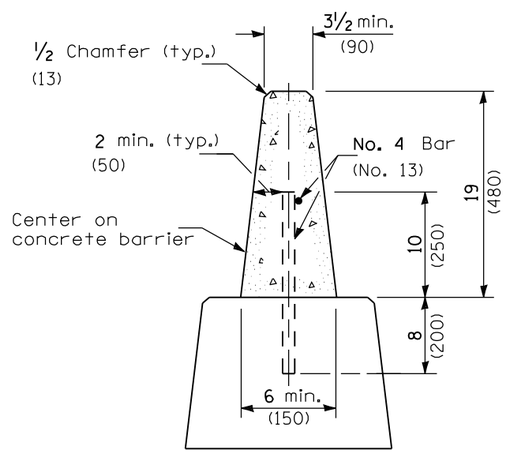

SECTION A-A

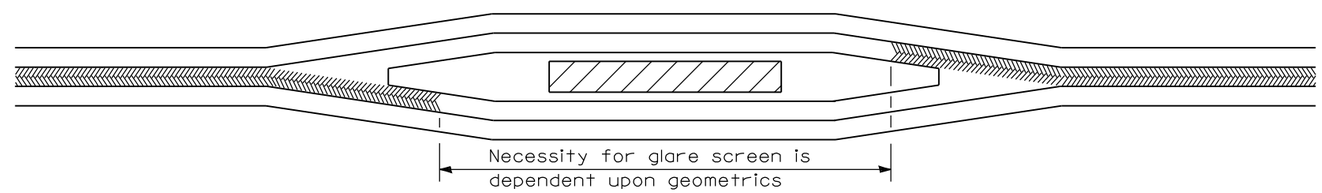

TYPICAL APPLICATION AT MEDIAN OBSTRUCTIONS

Glare Screen

All dimensions are in inches (millimeters) unless otherwise shown.

Illinois Department of Transportation

PASSED January 1, 2009
ENGINEER OF POLICY AND PROCEDURES
APPROVED January 1, 2009
ENGINEER OF DESIGN AND ENVIRONMENT

ISSUED 1-1-97

DATE	REVISIONS
1-1-09	Switched units to English (metric).
1-1-04	Revised for F shape barrier.

CONCRETE GLARE SCREEN

STANDARD 638101-02

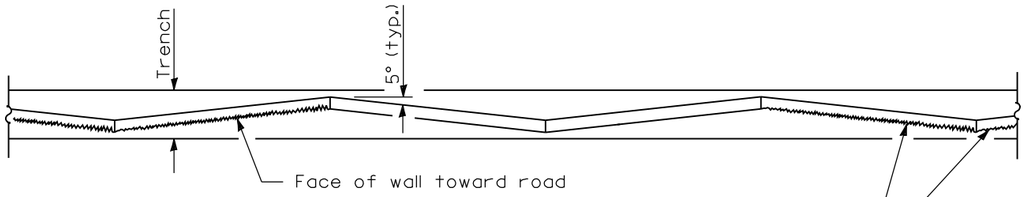

Each alternate pair of panels shall have a textured surface finish as shown, and shall be alternated with pairs having a smooth finish. The intersection of every two panels having the same finish shall point toward the road as shown.

PLAN

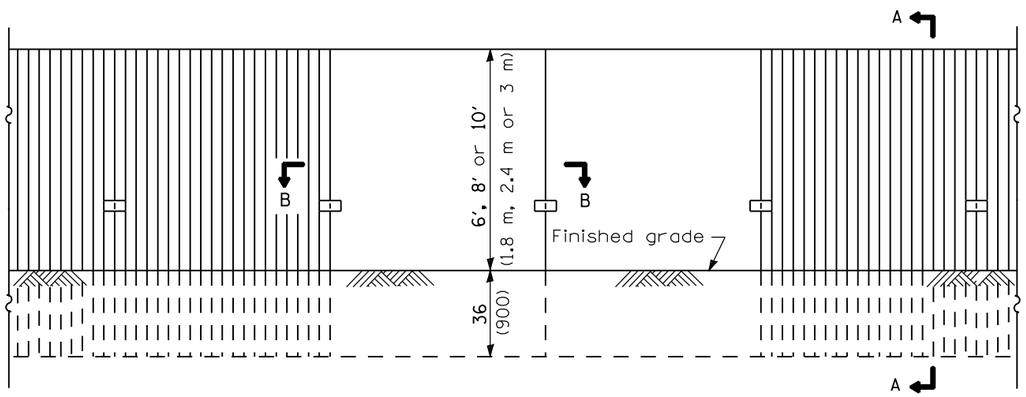

ELEVATION

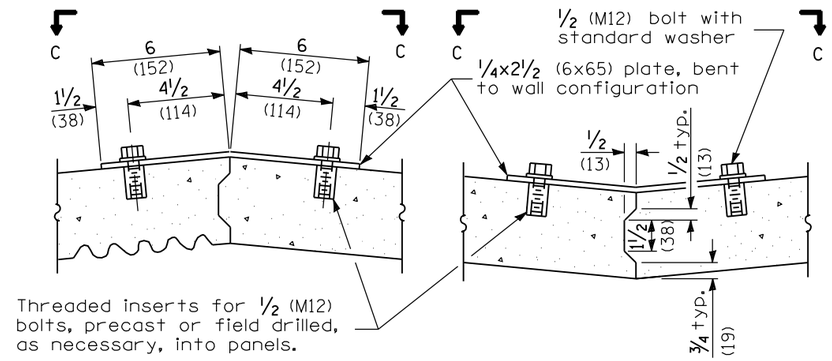

Showing typical metal band connector dimensions

Showing typical shear key dimensions

SECTION B-B

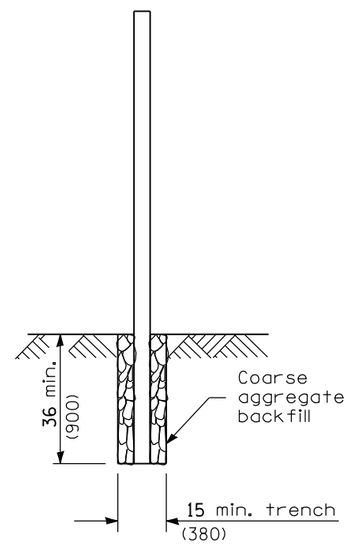

SECTION A-A

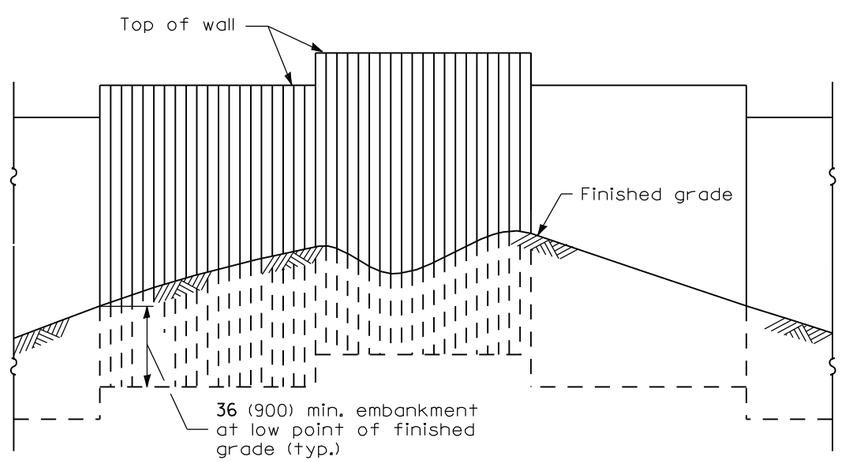

ELEVATION

(Showing installation of wall in irregular ground)

GENERAL NOTES

Loading for 80 mph (130 km/h) wind with 30% gust factor, normal to wall.

ALLOWABLE STRESSES:

Concrete:	f'c	= 3,500 psi (24 MPa)
	f'ci	= 2,250 psi (15 MPa)
Prestressing Steel:	f's	= 270,000 psi (1860 MPa)
	fsi	= 189,000 psi (1300 MPa)
Reinforcing Steel:	f'y	= 40,000 psi min. (270 MPa)
Structural Steel:	fs	= 20,000 psi (138 MPa)
Minimum allowable soil bearing pressure:		= 1.25 tsf (120 kPa)

All dimensions are in inches (millimeters) unless otherwise shown.

Illinois Department of Transportation

APPROVED January 1, 2009
Ralph E. Anderson
ENGINEER OF BRIDGES AND STRUCTURES

APPROVED January 1, 2009
Eric E. Harm
ENGINEER OF DESIGN AND ENVIRONMENT

ISSUED 1-1-97

DATE	REVISIONS
1-1-09	Switched units to English (metric).
1-1-07	Soft converted metric reinforcement bars & corrected dimensions.

SIGHT SCREEN
PRECAST PRESTRESSED CONCRETE PANEL WALL

(Sheet 1 of 2)

STANDARD 639001-02

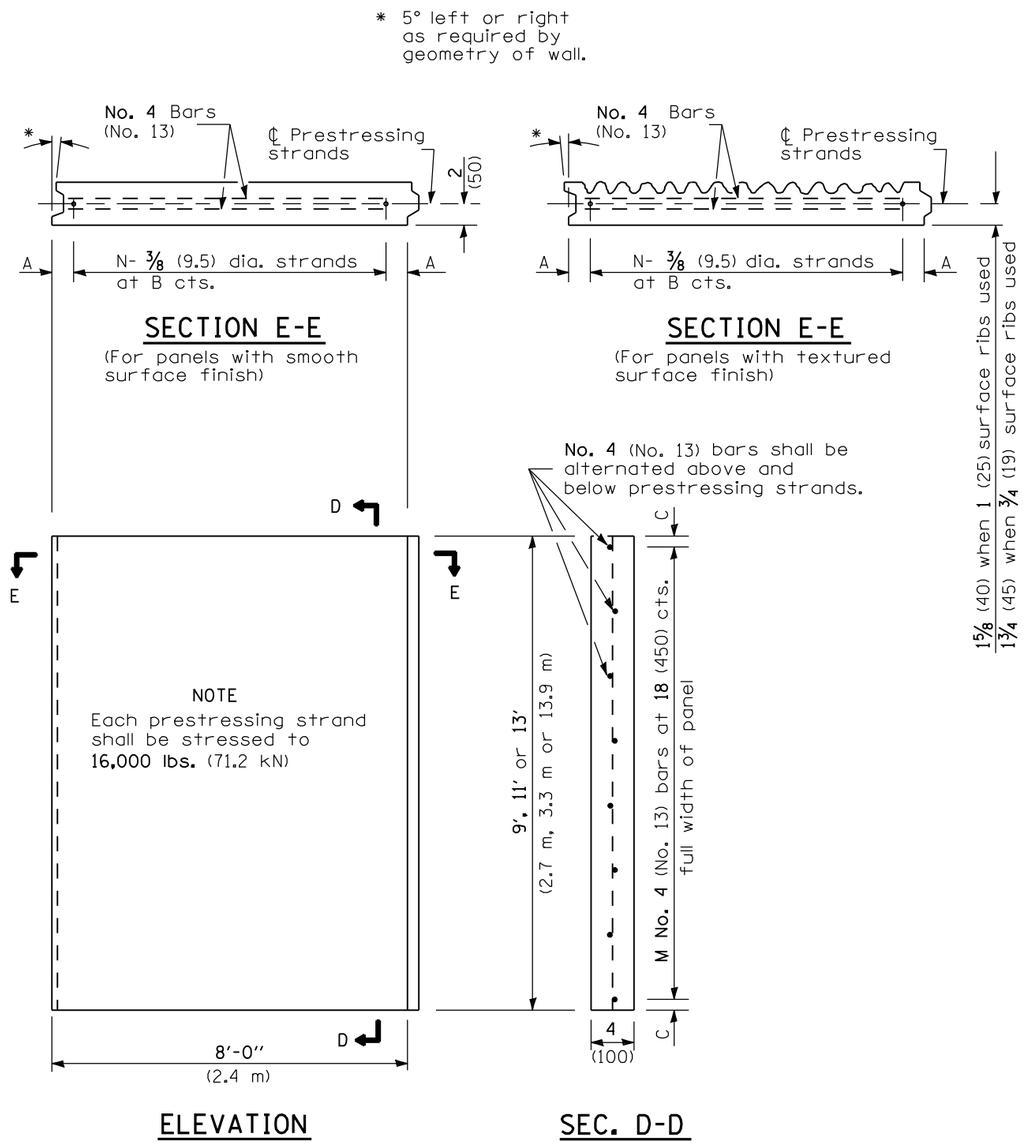

STRAND and REINFORCEMENT LAYOUT

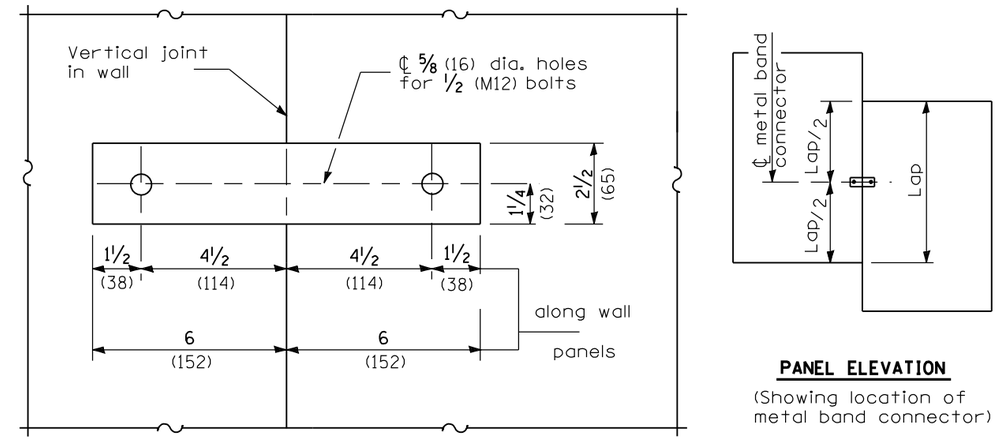

SECTION C-C

PANEL ELEVATION

(Showing location of metal band connector)

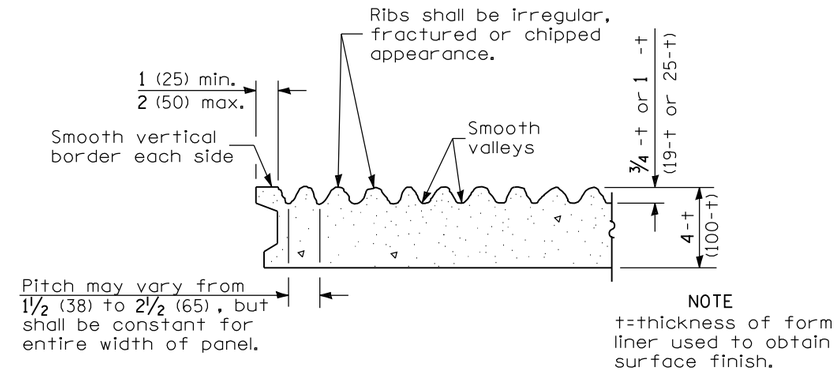

TEXTURED SURFACE FINISH DETAIL

Nominal Panel Size	A	N	B	C	M
8'-0" x 9'-0" (2.4 m x 2.7 m)	6 (150)	8	12 (300)	9 (225)	6
8'-0" x 11'-0" (2.4 m x 3.3 m)	3 (75)	11	9 (225)	3 (75)	8
8'-0" x 13'-0" (2.4 m x 3.9 m)	3 (75)	16	6 (150)	6 (150)	9

Illinois Department of Transportation

APPROVED January 1, 2009
Ralph E. Anderson
ENGINEER OF BRIDGES AND STRUCTURES

APPROVED January 1, 2009
Eric E. Harm
ENGINEER OF DESIGN AND ENVIRONMENT

ISSUED 1-1-97

SIGHT SCREEN
PRECAST PRESTRESSED CONCRETE
PANEL WALL

(Sheet 2 of 2)

STANDARD 639001-02

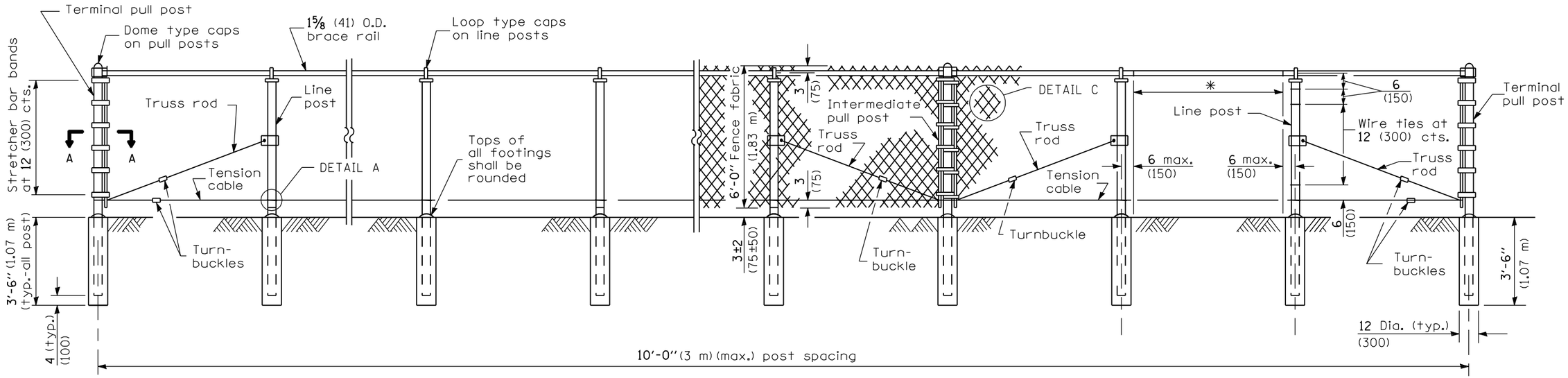

ELEVATION - 6' (1.83 m) FENCE

(Looking toward highway)

FENCE HEIGHT	POST SECTION (O.D.)	lbs./ft. (kg/m)
6 ft. (1.83 m)	4 (102)	9.11 (13.6)
8 ft. (2.43 m)	4 (102)	12.51 (18.6)
10 ft. (3.05 m)	4 (102)	22.85 (34)

Post sizes other than those shown may be used subject to approval by the Engineer.

* Fence fabric shall be tied to all line posts, tension cable and brace rails with 9 ga. (3.76) wire ties at 12 (300) cts.

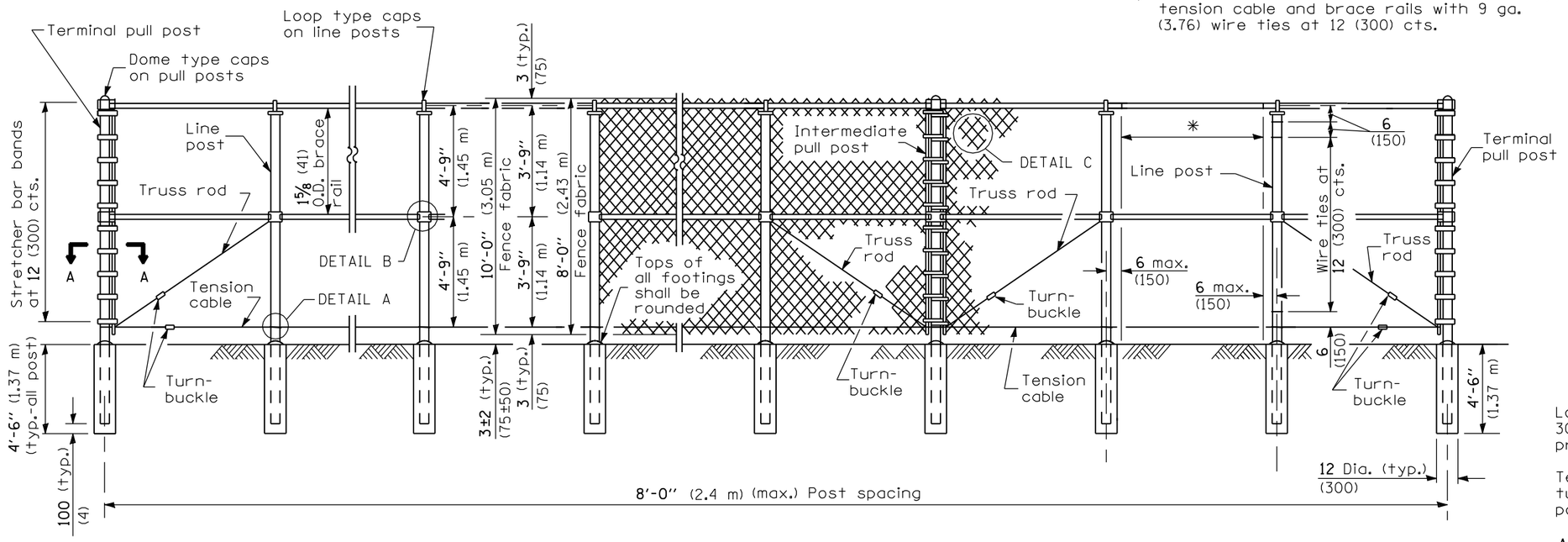

ELEVATION - 8' (2.43 m) & 10' (3.05 m) FENCES

(Looking toward highway)

GENERAL NOTES

Loading for wind 80 mph (130 km/h) with 30% gust factor. Minimum allowable soi pressure = 1.25 tsf (120 kPa).

Tension cable shall be provided with one turn buckle between each pair of pull posts.

All dimensions are in inches (millimeters) unless otherwise shown.

Illinois Department of Transportation

APPROVED January 1, 2009
Ralph E. Anderson
ENGINEER OF BRIDGES AND STRUCTURES

APPROVED January 1, 2009
Eric E. Harm
ENGINEER OF DESIGN AND ENVIRONMENT

ISSUED 1-1-97

DATE	REVISIONS
1-1-09	Switched units to
	English (metric).
	Revised General Notes.
1-1-97	Renum. Standard 2365-6.

SIGHT SCREEN CHAIN LINK FENCE

(Sheet 1 of 2)

STANDARD 640001-01

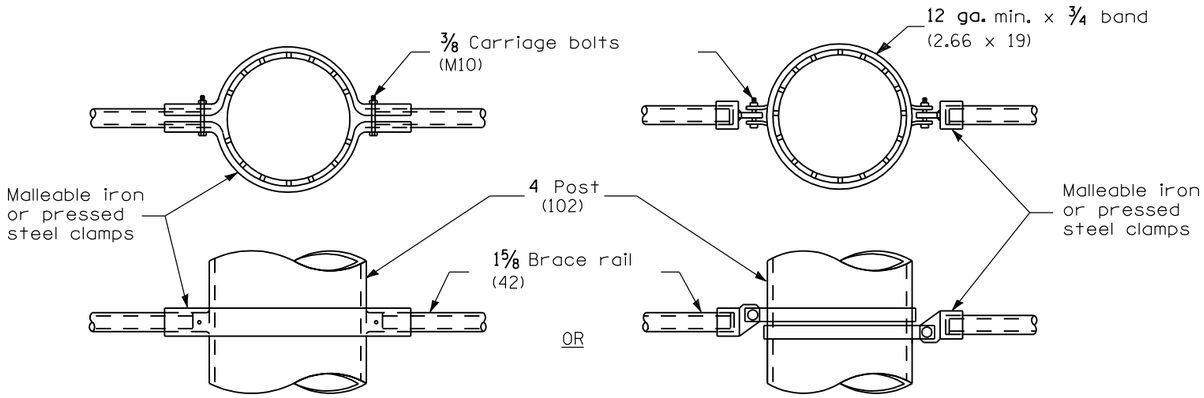

DETAIL B

(Showing typical method of attaching middle brace rails to posts.)

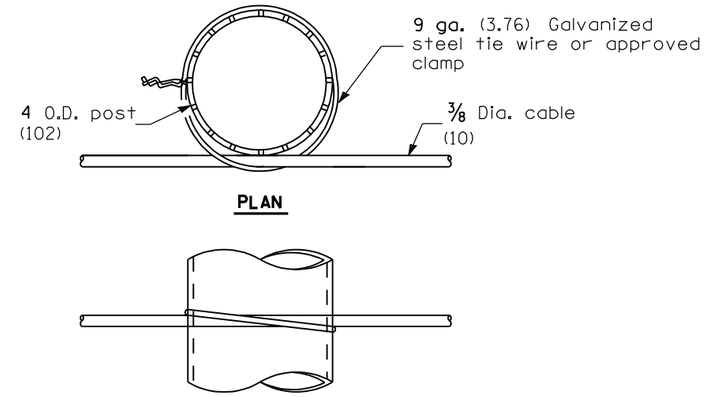

DETAIL A

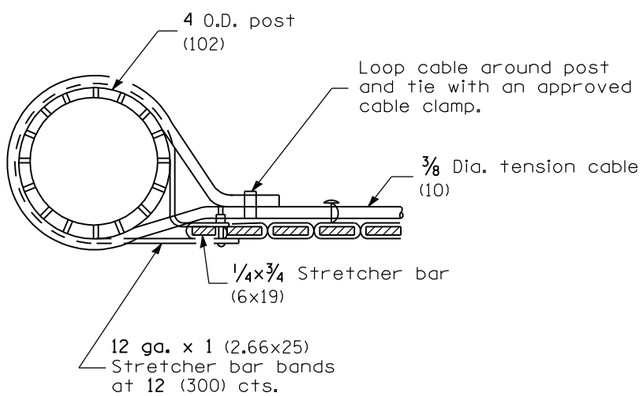

SECTION A-A

(Showing method of fastening bottom tension cable and fence fabric to pull posts.)

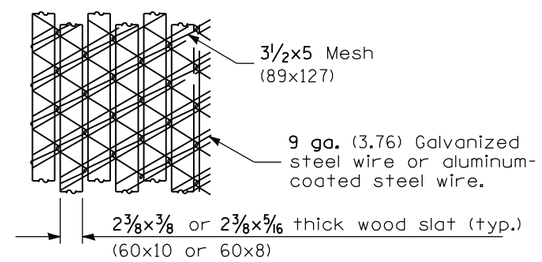

DETAIL OF FABRIC

(Looking from highway)

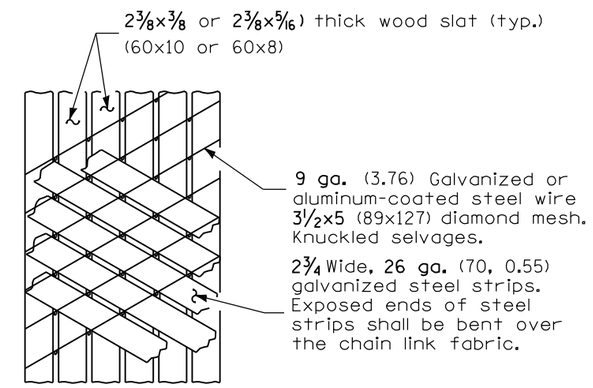

DETAIL C

(Looking toward highway)

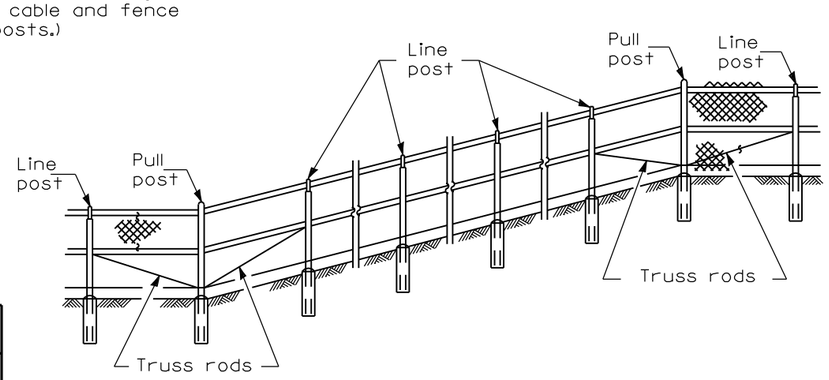

FENCE INSTALLATION ON SLOPES

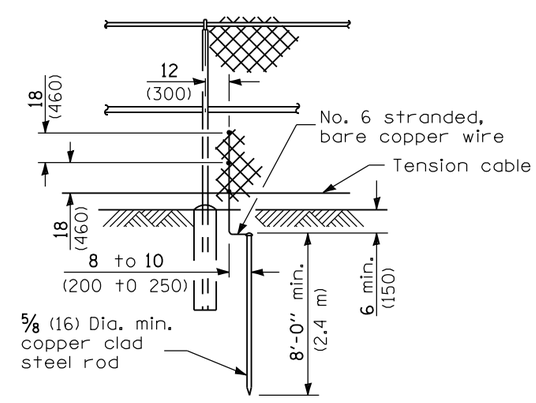

PROTECTIVE ELECTRICAL GROUND

Illinois Department of Transportation

APPROVED January 1, 2009
Ralph E. Anderson
ENGINEER OF BRIDGES AND STRUCTURES

APPROVED January 1, 2009
Eric E. Harm
ENGINEER OF DESIGN AND ENVIRONMENT

ISSUED 1-1-97

SIGHT SCREEN CHAIN LINK FENCE

(Sheet 2 of 2)

STANDARD 640001-01

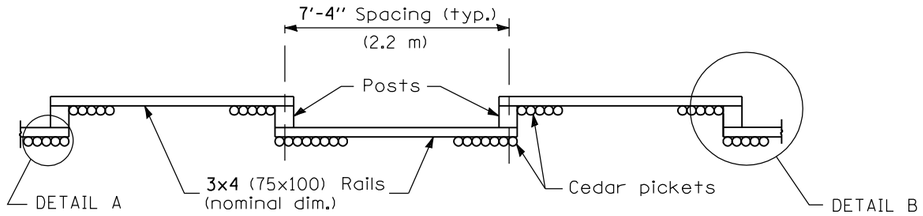

PLAN

(Facing highway)

	FENCE HEIGHT	
	6'-0" (1.8 M)	8'-0" (2.4 m)
Post Size (nominal dim.)	6x8 (150X200)	8x8 (200x200)
Post Length	10'-0" (3.0 m)	14'-0" (4.3 m)
Post Embedment	4'-0" (1.2 m)	6'-0" (1.8 m)
A	15 (380)	18 (460)
B	24 (600)	33 (870)
C	24 (600)	33 (870)
D	12 (300)	15 (380)

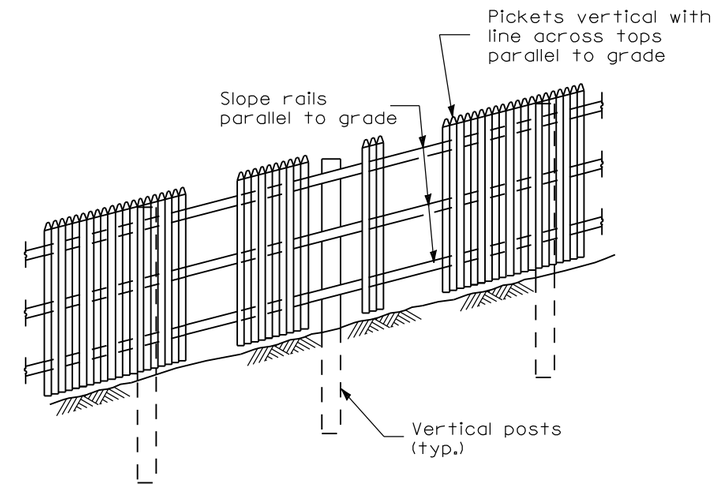

ELEVATION

(Showing treatment with sloping ground)

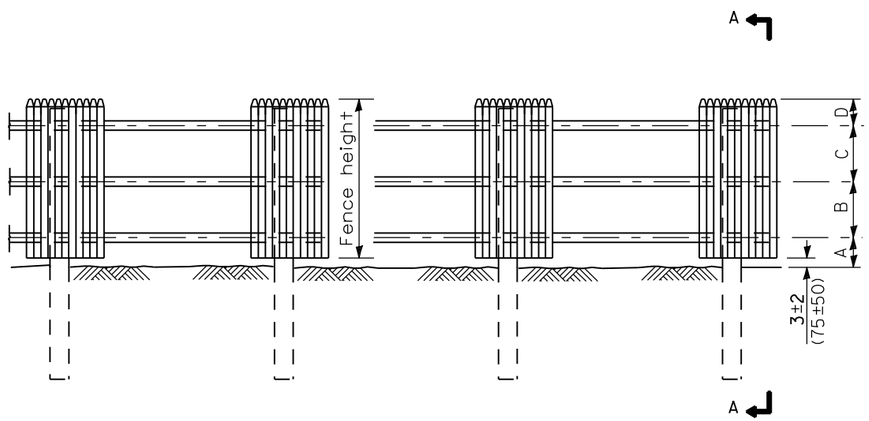

ELEVATION

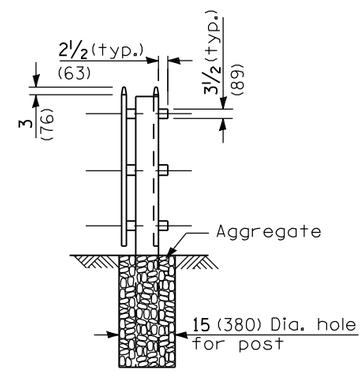

SEC. A-A

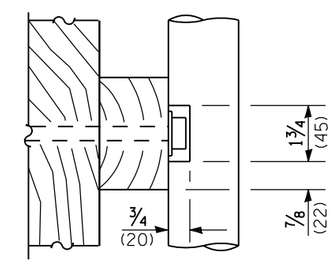

SECTION B-B

(Notch pickets when required to clear washer and bolt head.)

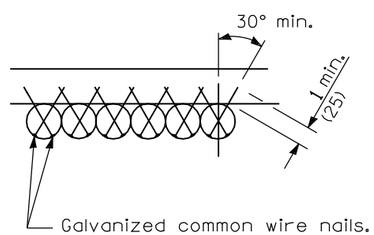

DETAIL A

(Showing typical picket to rail attachment)

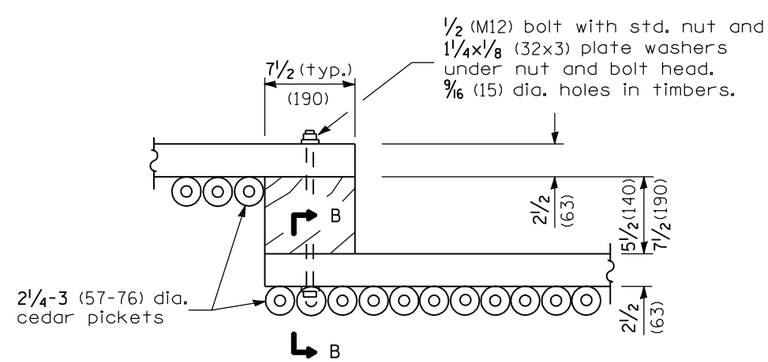

DETAIL B

(Showing typical panel to post connection at each rail.)

GENERAL NOTES

Loading is based on 80 mph (130 km/h) with 30% gust factor. Minimum allowable soil pressure = 1.25 tsf (120 kPa).

All dimensions are in inches (millimeters) unless otherwise shown.

Illinois Department of Transportation

APPROVED January 1, 2009
ENGINEER OF BRIDGES AND STRUCTURES

APPROVED January 1, 2009
ENGINEER OF DESIGN AND ENVIRONMENT

ISSUED 1-1-97

DATE	REVISIONS
1-1-09	Switched units to
	English (metric). Changed
	Sec. B-B to Detail B.
1-1-97	Renum. Standard 2367-3.
	Deleted DN Symbol.

SIGHT SCREEN CEDAR STOCKADE FENCE TYPE S

STANDARD 641001-01

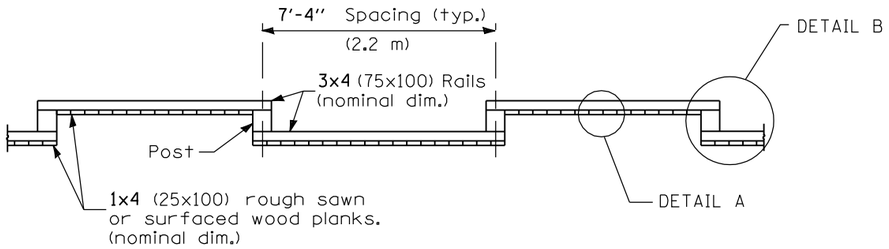

PLAN
(Facing highway)

	FENCE HEIGHT	
	6'-0" (1.8 m)	8'-0" (2.4 m)
Post Size (nominal dim.)	6x8 (150x200)	8x8 (200x200)
Post Length	10'-0" (3.0 m)	14'-0" (4.3 m)
Post Embedment	4'-0" (1.2 m)	6'-0" (1.8 m)
A	15 (380)	18 (460)
B	24 (600)	33 (870)
C	24 (600)	33 (870)
D	12 (300)	15 (380)

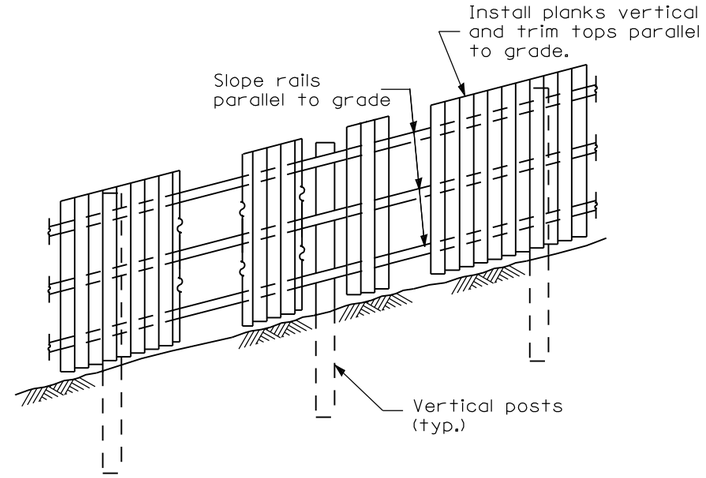

ELEVATION
(Showing treatment with sloping ground)

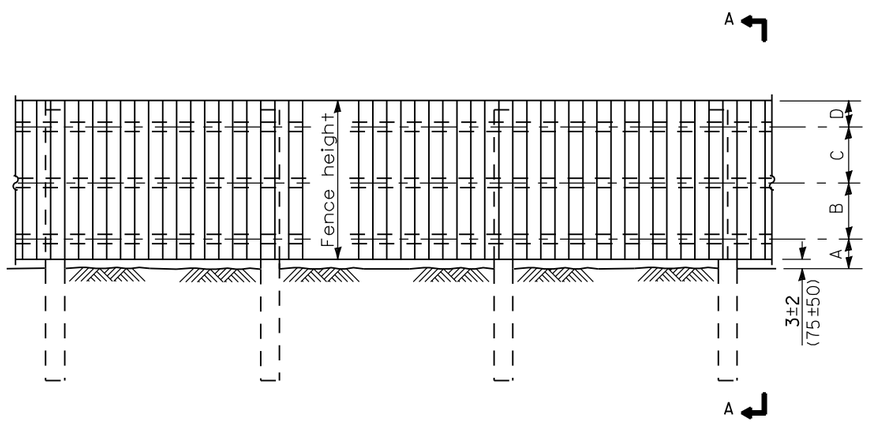

ELEVATION

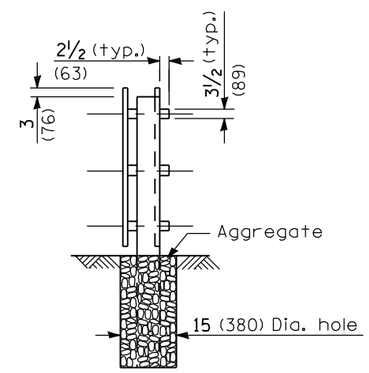

SEC. A-A

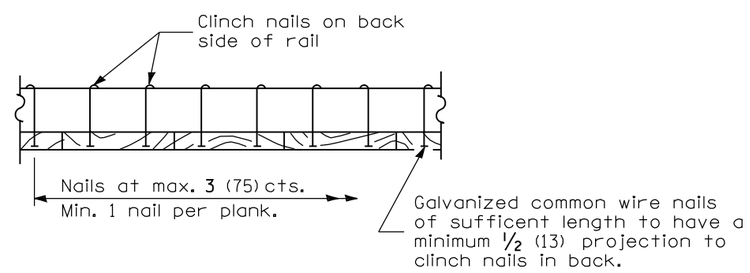

DETAIL A
(Showing typical plank to
rail attachment each rail.)

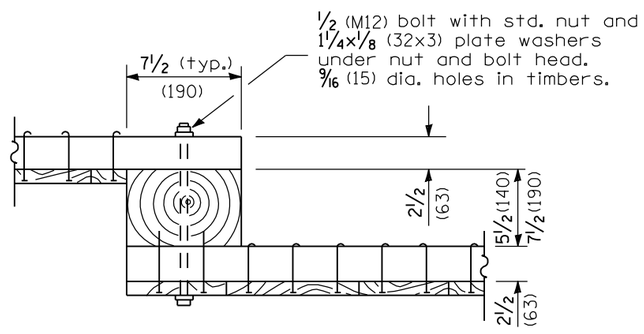

DETAIL B
(Showing typical panel to
post connection details)

GENERAL NOTES

Loading was based on 80 mph (130 km/h) with 30% gust factor. Minimum allowable soil pressure = 1.25 tsf (120 kPa).

All dimensions are in inches (millimeters) unless otherwise shown.

Illinois Department of Transportation

APPROVED January 1, 2009
Ralph E. Anderson
ENGINEER OF BRIDGES AND STRUCTURES

APPROVED January 1, 2009
Eric L. Harm
ENGINEER OF DESIGN AND ENVIRONMENT

ISSUED 1-1-97

DATE	REVISIONS
1-1-09	Switched units to
	English (metric). Changed
	Section B-B to Detail B.
1-1-97	Renum. Standard 2367-3.
	Deleted DN Symbol.

SIGHT SCREEN WOOD PLANK FENCE TYPE P

STANDARD 641006-01

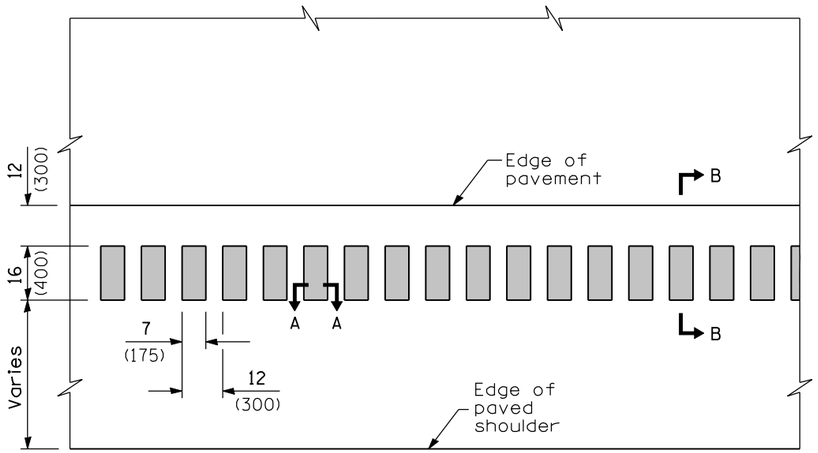

PLAN

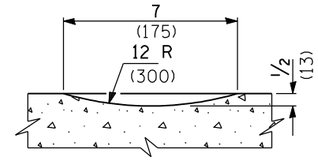

SECTION A-A

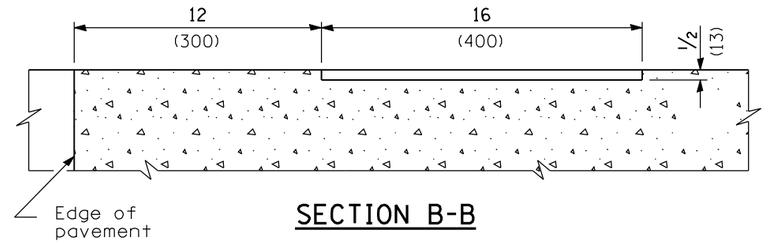

SECTION B-B

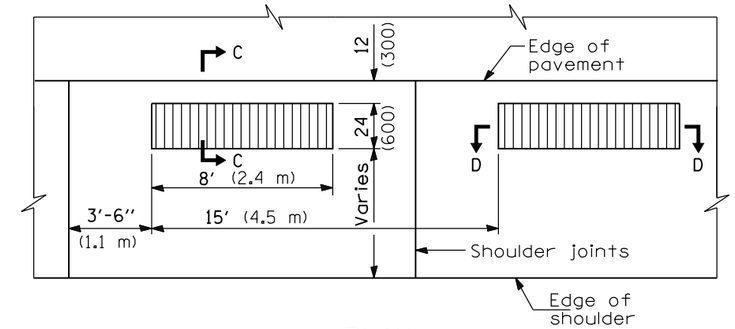

PLAN

(Formed Alternate for PCC Shoulders)

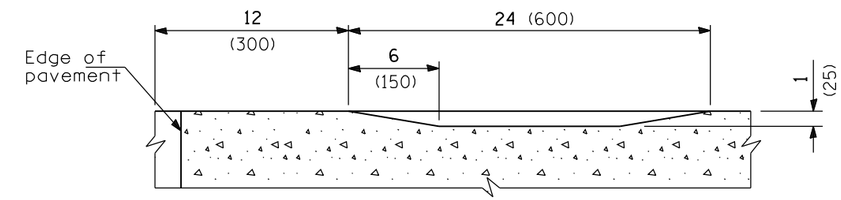

SECTION C-C

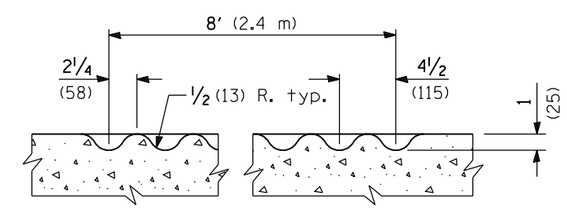

SECTION D-D

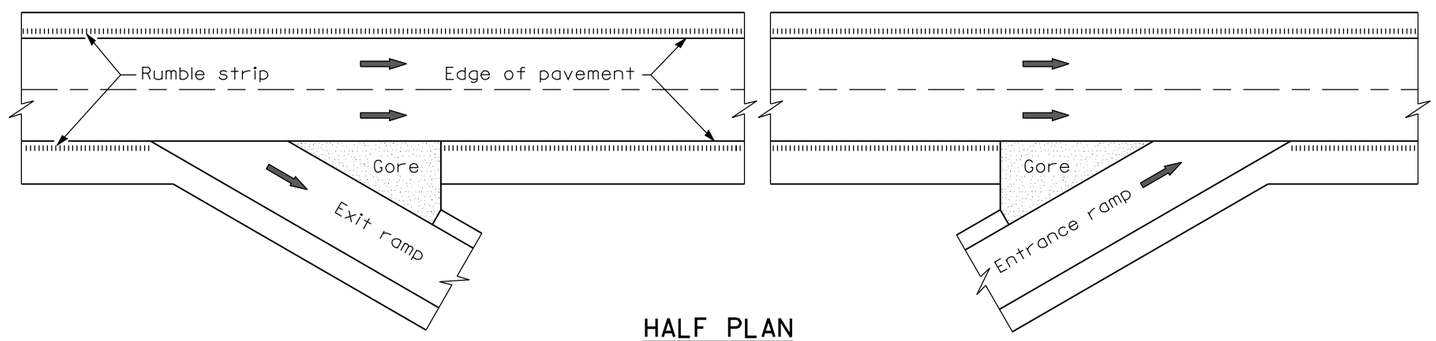

HALF PLAN

TYPICAL APPLICATION AT AN INTERCHANGE

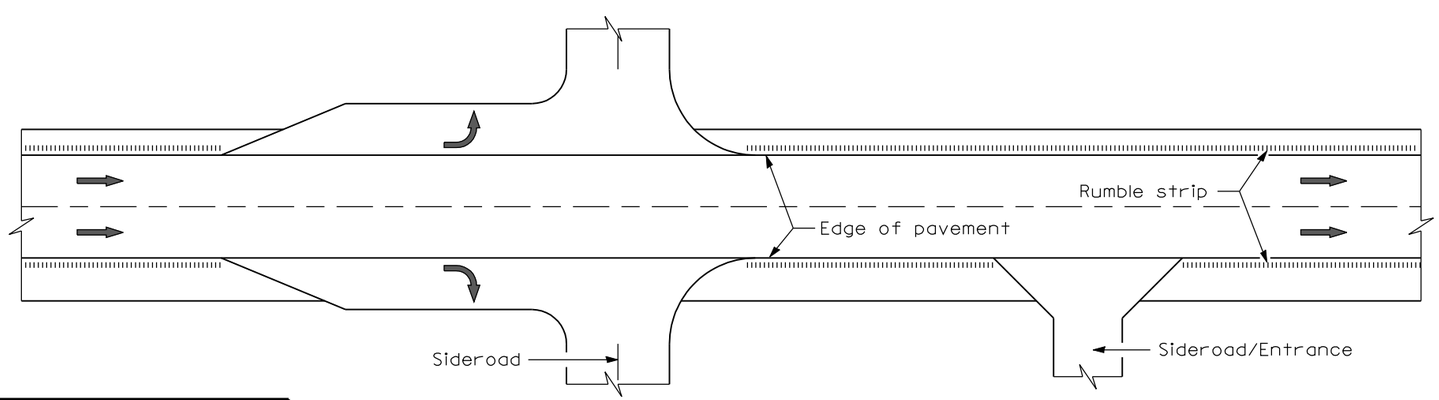

HALF PLAN

TYPICAL APPLICATION AT AN INTERSECTION OR ENTRANCE

GENERAL NOTES

On Portland cement concrete shoulders, no shoulder rumble strip shall be located closer than 6 (150) to a transverse joint.

Omit shoulder rumble strips across structures.

All dimensions are in inches (millimeters) unless otherwise shown.

Illinois Department of Transportation

PASSED January 1, 2009
ENGINEER OF POLICY AND PROCEDURES

APPROVED January 1, 2009
ENGINEER OF DESIGN AND ENVIRONMENT

ISSUED 1-1-03

DATE	REVISIONS
1-1-09	Switched units to English (metric).
1-1-03	Revised rumble strip design and renumbered Std. 482101

SHOULDER RUMBLE STRIPS

STANDARD 642001-01

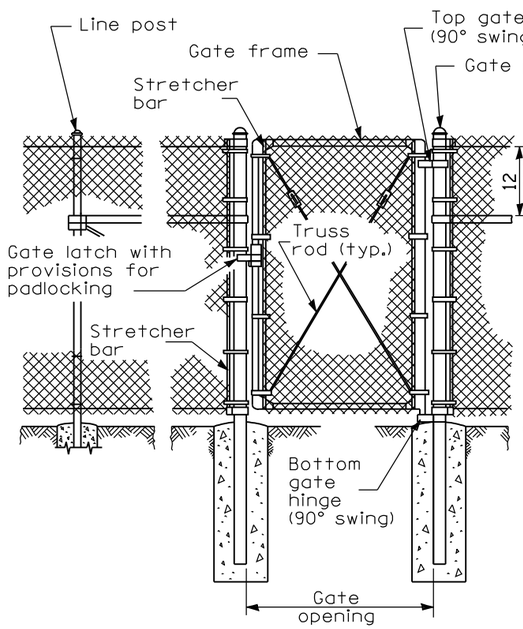

PEDESTRIAN GATE ARRANGEMENT

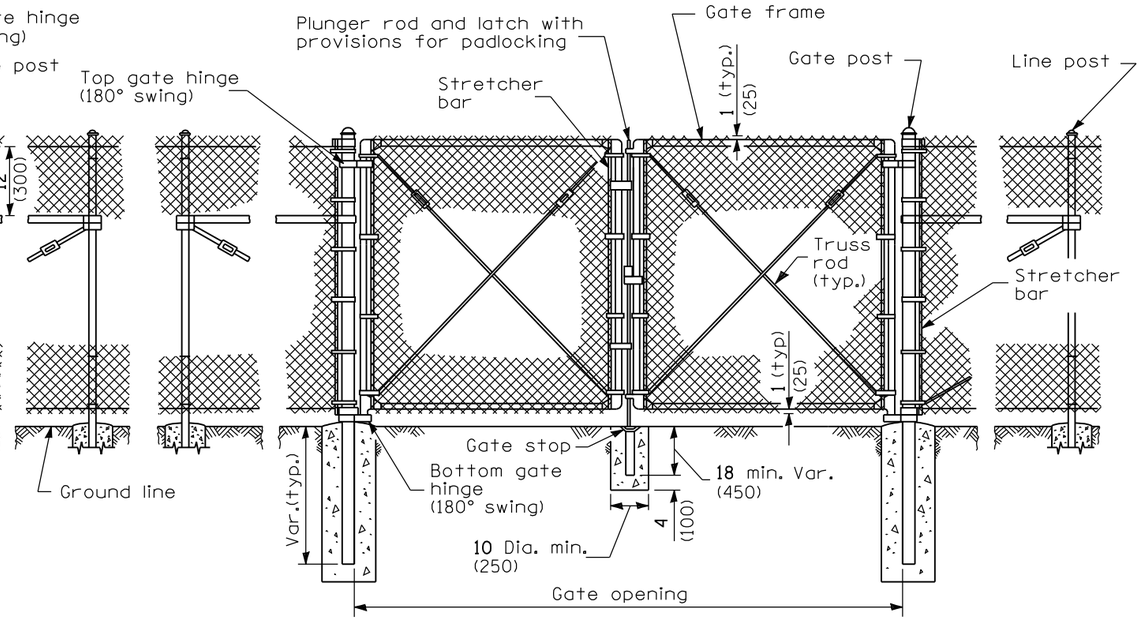

VEHICLE GATE ARRANGEMENT

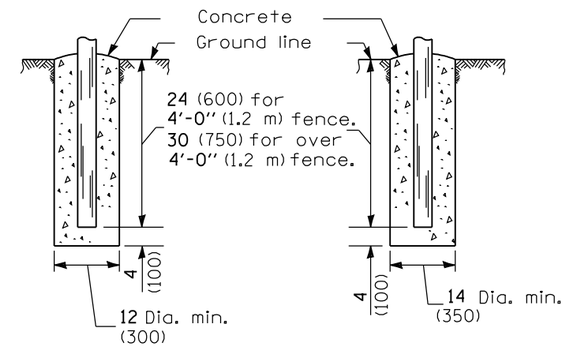

FOOTING FOR LINE POST

FOOTING FOR GATE & TERMINAL POST

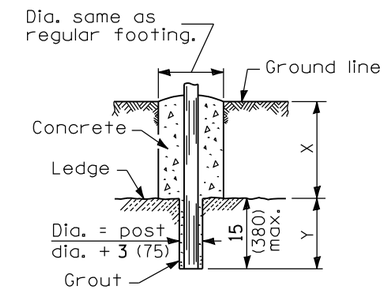

FOOTING FOR POST IN ROCK LEDGE

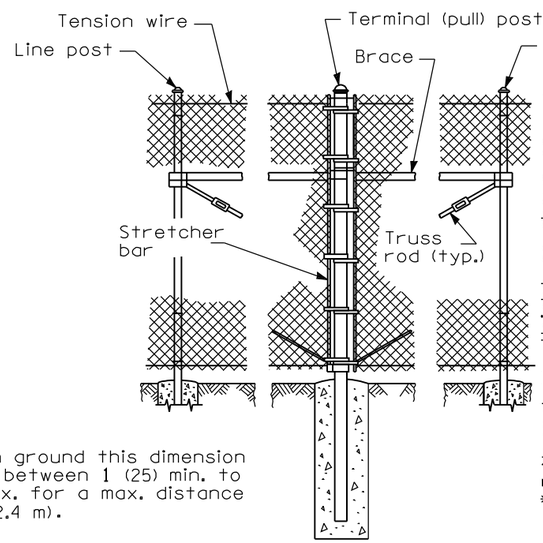

PULL POST ARRANGEMENT

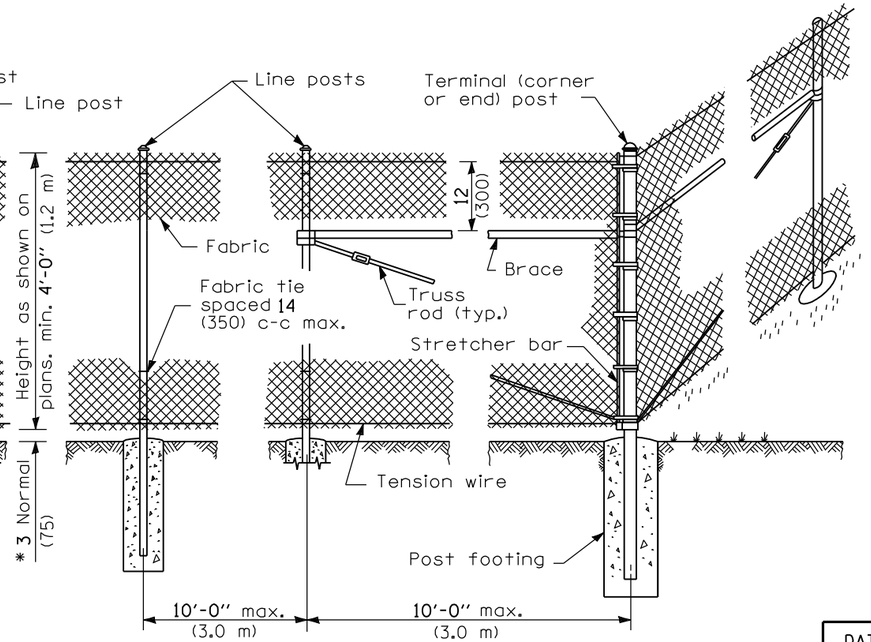

LINE POST ARRANGEMENT

CORNER OR END POST ARRANGEMENT

* On uneven ground this dimension may vary between 1 (25) min. to 5 (125) max. for a max. distance of 8'-0" (2.4 m).

GENERAL NOTES

Pull posts shall be placed at locations determined by the Engineer. They shall be placed at 660' (200 m) intervals between posts to which the ends of the fabric are clamped or midway between such posts when the distance is less than 1320' (400 m) and greater than 660' (200 m).

X + Y shall not exceed 24, 30, or 36 (600, 750, or 900), as applicable. When X is 0 - 9 (0 - 225), 15 (380), or 21 (525), then Y = 15 (375) and the post shall be shortened as required. When X exceeds 9 (225), 15 (380), or 21 (525), then Y shall be decreased correspondingly.

All dimensions are in inches (millimeters) unless otherwise shown.

Illinois Department of Transportation

PASSED January 1, 2009
ENGINEER OF POLICY AND PROCEDURES
APPROVED January 1, 2009
ENGINEER OF DESIGN AND ENVIRONMENT

ISSUED 1-1-97

DATE	REVISIONS
1-1-09	Switched units to English (metric).
1-1-99	Rev. "pans" to "plans" in LINE POST ARRANGEMENT.

CHAIN LINK FENCE

(Sheet 1 of 3)

STANDARD 664001-02

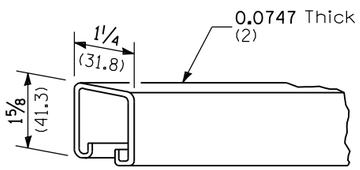

ROLL FORMED
SECTION OF BRACE

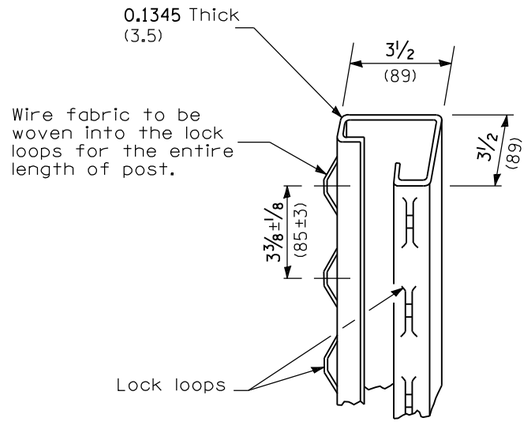

ROLL FORMED SECTION OF
TERMINAL & GATE POST

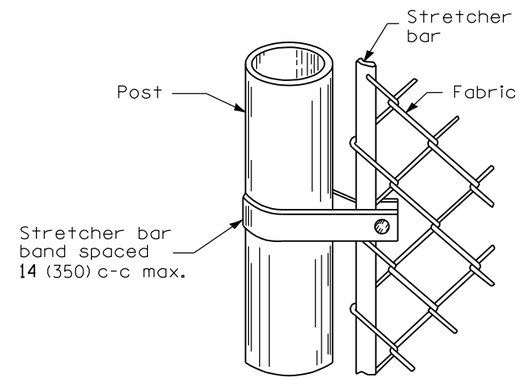

METHOD OF FASTENING
STRETCHER BAR TO POST

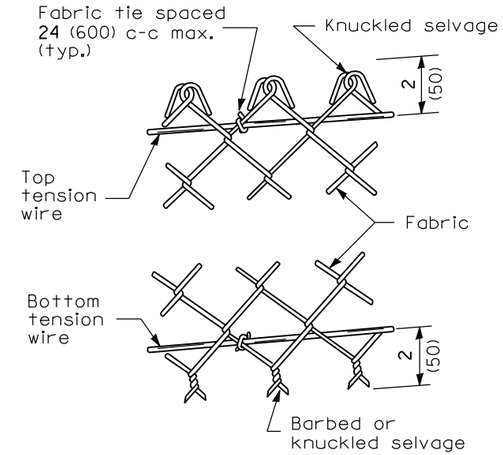

METHOD OF TYING
FABRIC TO TENSION WIRES

LINE POST	
Section	lbs./ft. (kg/m)
Pipe Type A 1.90 O.D. (48.3)	2.72 (4.05)
Pipe Type B 1.90 O.D. (48.3)	2.28 (3.39)
Pipe Type C 1.90 O.D. (48.3)	2.26 (3.36)
H 1.875x1.625 (47.6x41.3)	2.72 (4.05)
⊏	1.60 (2.38)
I	2.30 (3.42)

TERMINAL POST	
Section	lbs./ft. (kg/m)
Pipe Type A 2.375 O.D. (60.3)	3.65 (5.43)
Pipe Type B 2.375 O.D. (60.3)	3.11 (4.63)
Pipe Type C 2.375 O.D. (60.3)	3.09 (4.60)
Roll Formed 3½x3½ (89.0x89.0)	See detail
Sq. Tubing 2½x2½ (63.5x63.5)	4.32 (6.43)

HORIZONTAL BRACES	
Section	lbs./ft. (kg/m)
Pipe Type A 1.66 O.D. (42.2)	2.27 (3.38)
Pipe Type B 1.66 O.D. (42.2)	1.83 (2.72)
Pipe Type C 1.66 O.D. (42.2)	1.82 (2.71)
H 1.31x1.5 (33.3x38.1)	2.25 (3.35)
Roll Formed 1⅝x1¼ (41.3x31.8)	See detail

GATE FRAMES	
Section	lbs./ft. (kg/m)
Pipe Type A 1.66 O.D. (42.2)	2.27 (3.38)
Pipe Type B 1.66 O.D. (42.2)	1.83 (2.72)
Pipe Type C 1.66 O.D. (42.2)	1.82 (2.71)

GATE POSTS *							
Gate Opening * ft. (m)		Pipe Type A		Sq. Tubing		Pipe Type B	
Single	Double	Size (O.D.)	lbs./ft. (kg/m)	Size	lbs./ft. (kg/m)	Size (O.D.)	kg/m (lbs./ft.)
Up to 4 (1.2)	Up to 8 (2.5)	2.375 (60.3)	3.65 (5.43)	2½ (63.5)	4.32 (6.43)	2.375 (60.3)	3.11 (4.63)
Over 4 to 8 (1.2) (2.5)	Over 8 to 16 (2.5) (5.0)	2.875 (73.0)	5.79 (8.62)	3 (76.2)	5.78 (8.60)	2.875 (73.0)	4.64 (6.91)
Over 8 to 12 (2.5) (3.6)	Over 16 to 24 (5.0) (7.4)	3.5 (89.0)	7.58 (11.28)	3 (76.2)	8.80 (13.10)	3.5 (89)	5.707 (8.49)

* The 3½ x 3½ (89.0 x 89.0) roll formed section as detailed may be used as gate posts for single gate up to 6′ (1.8 m) and double gate up to 12′ (3.6 m).

Illinois Department of Transportation

PASSED January 1. 2009
ENGINEER OF POLICY AND PROCEDURES
APPROVED January 1. 2009
ENGINEER OF DESIGN AND ENVIRONMENT

ISSUED 1-1-97

CHAIN LINK FENCE

(Sheet 2 of 3)

STANDARD 664001-02

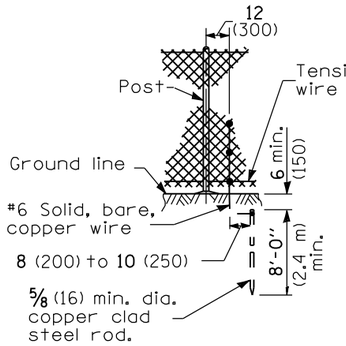

STANDARD GROUND

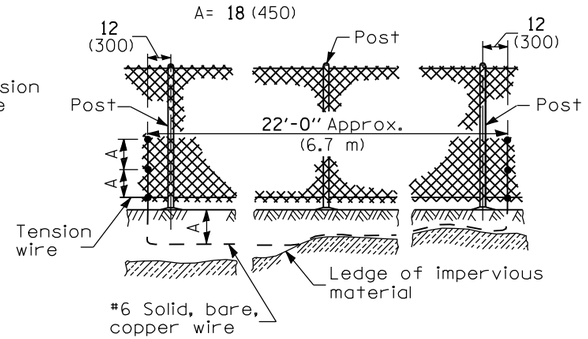

COUNTERPOISE GROUND
(ALTERNATE)

PROTECTIVE ELECTRICAL GROUNDS

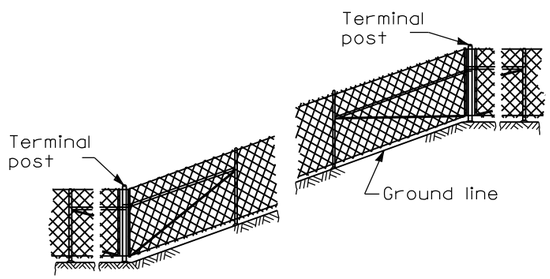

INSTALLATION ON SLOPES

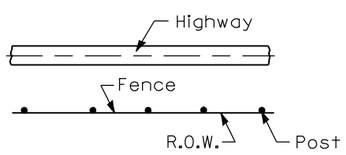

PLAN

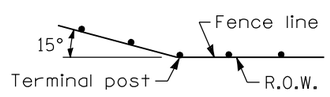

When fence line has a change in direction of 15° or more, a terminal post shall be placed as shown above.

Where angle is less than 15° and existing conditions require a terminal post, they shall be placed as directed by the Engineer.

INSTALLATION AT CORNERS

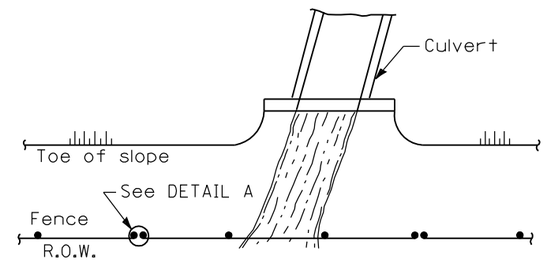

PLAN
AT STREAM CROSSING

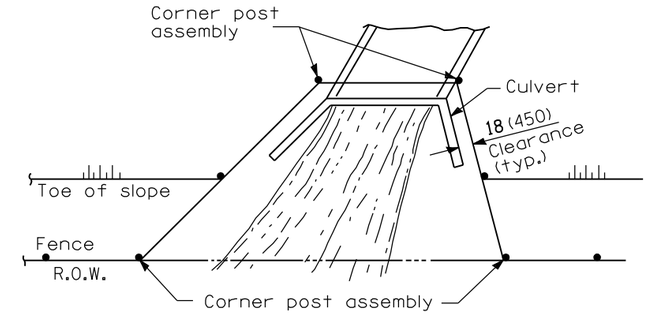

PLAN
AT HEADWALL

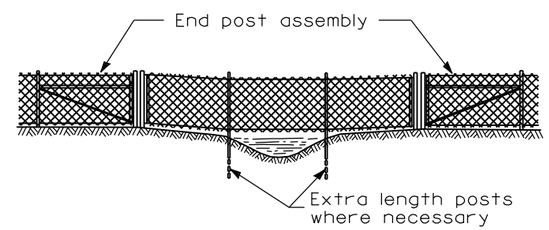

The chain link fabric shall be replaced by barbed wire strands at 12 (300) maximum centers between the double posts shown on DETAIL A when shown on the plans.

ELEVATION
INSTALLATION OVER STREAM

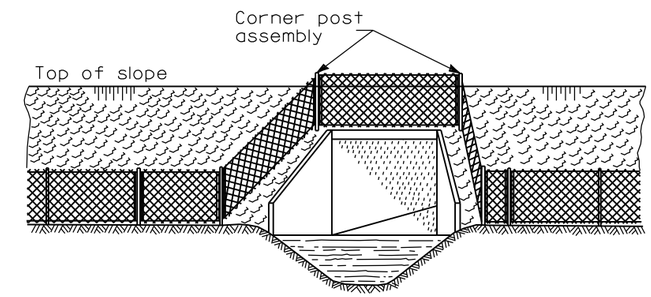

When the width of the culvert makes it necessary to anchor a post to the top of the culvert, a cast iron shoe or other device approved by the Engineer shall be used.

ELEVATION
INSTALLATION AROUND HEADWALL

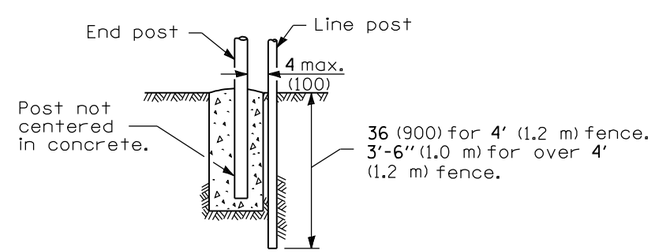

DETAIL A

Illinois Department of Transportation

PASSED January 1, 2009
ENGINEER OF POLICY AND PROCEDURES
APPROVED January 1, 2009
ENGINEER OF DESIGN AND ENVIRONMENT

ISSUED 1-1-97

CHAIN LINK FENCE

(Sheet 3 of 3)

STANDARD 664001-02

FENCE USING METAL POSTS

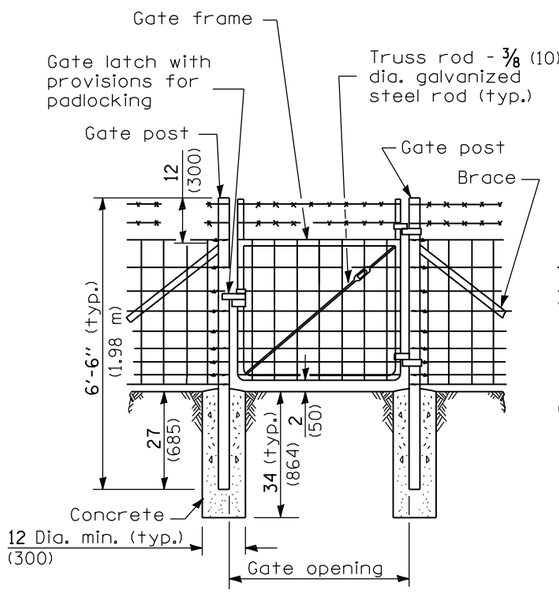

SINGLE GATE

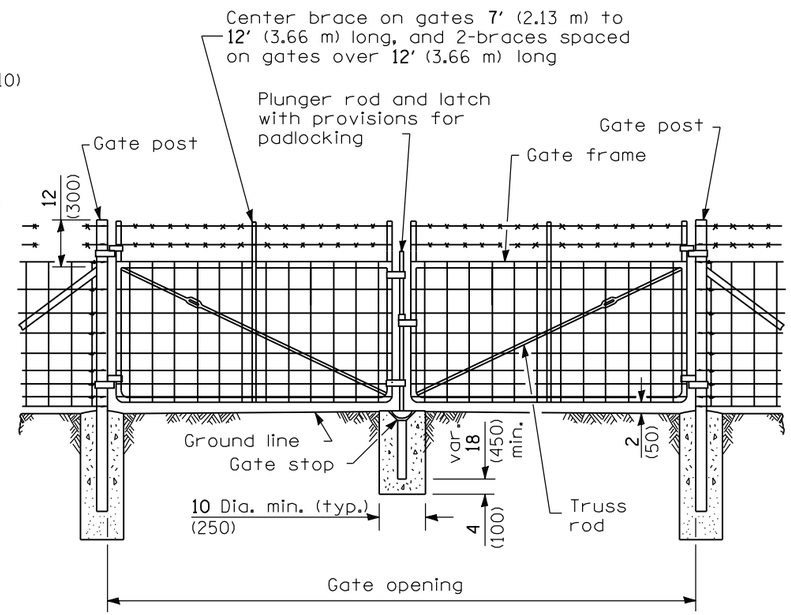

DOUBLE GATE

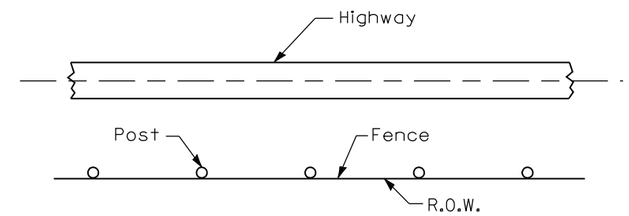

PLAN

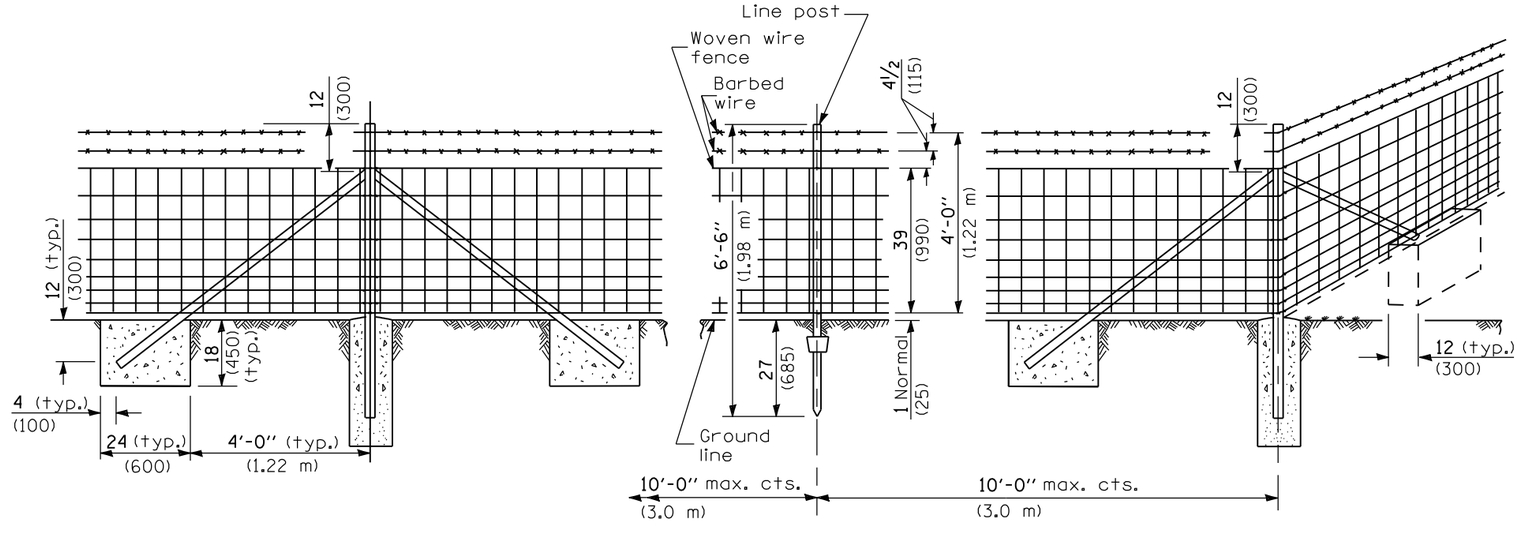

PULL POST

LINE POST

CORNER OR END POST

NOTES

Barbed wires shall be tied to each post. Top and bottom wires of woven fence shall be tied to each post. Tie every other wire between, alternating on successive posts.

Barbed wires and line wires of woven fence shall be be fastened to the corner, end, pull, and gate posts by wrapping the wires around the post and tying back on itself with not less than 3 twists tightly wrapped.

GENERAL NOTES

Pull posts shall be placed at the locations determined by the Engineer. They shall be placed at 660' (200 m) intervals between posts to which the ends of the fabric and barbed wires are fastened or midway between such posts when the distance is less than 1320' (400 m) and greater than 660' (200 m).

Bracing for gate posts shall be the same type used for end posts.

The clearance between the bottom fence wire and the ground may be up to 3 (75) for a maximum distance of 8' (2.4 m) when uneven ground is encountered.

All dimensions are in inches (millimeters) unless otherwise shown.

Illinois Department of Transportation

PASSED January 1, 2009
ENGINEER OF POLICY AND PROCEDURES

APPROVED January 1, 2009
ENGINEER OF DESIGN AND ENVIRONMENT

ISSUED 1-1-97

DATE	REVISIONS
1-1-09	Switched units to English (metric).
1-1-02	Corrected dimensions on sheet 3 and 4.

WOVEN WIRE FENCE

(Sheet 1 of 4)

STANDARD 665001-02

FENCE USING WOOD POSTS

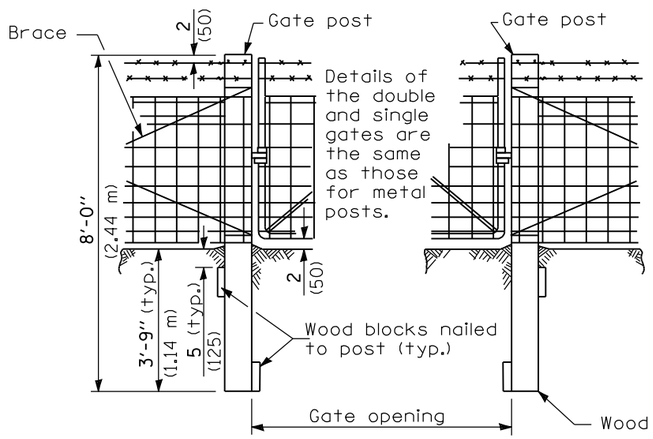

SINGLE OR DOUBLE GATE

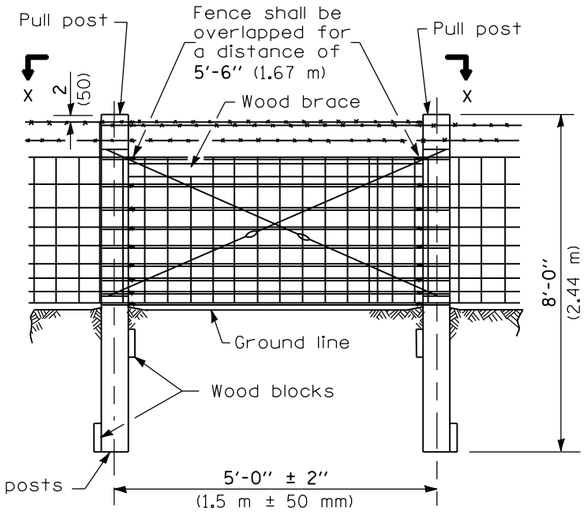

PULL POST

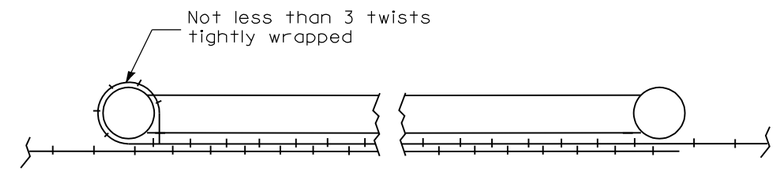

SECTION X-X

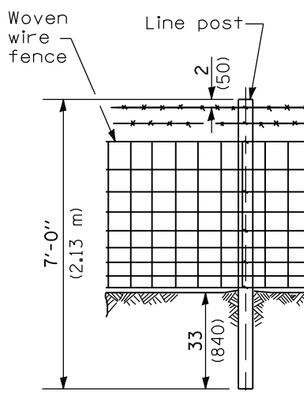

LINE POST

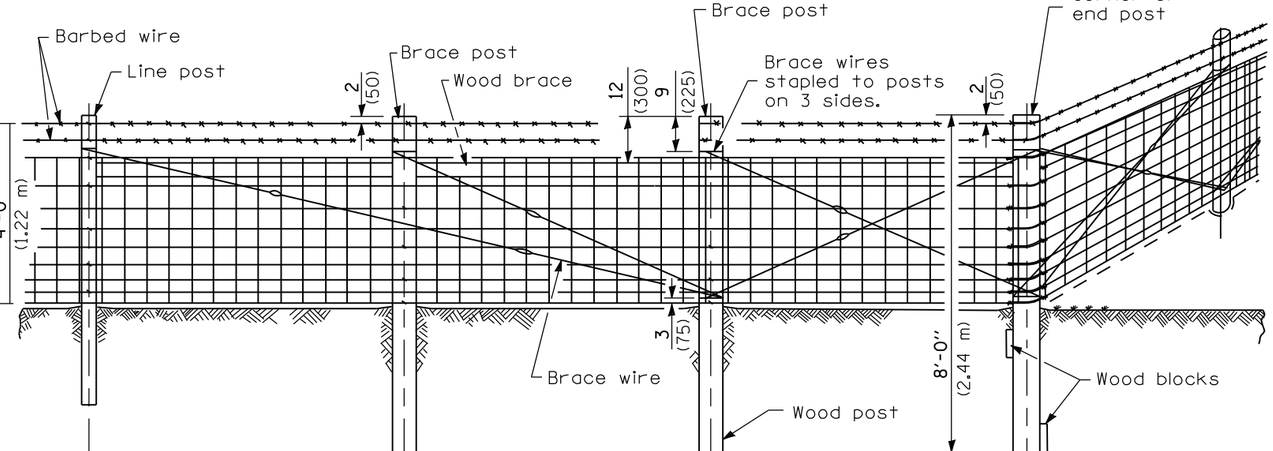

10'-0" max. (3.0 m)

5'-0" ± 2" (1.5 m ± 50 mm)

5'-0" ± 2" (1.5 m ± 50 mm)

5'-0" ± 2" (1.5 m ± 50 mm)

One bay of bracing for run of fence less than 150' (46 m) to corner, end or gate post.

Two bays of bracing for run of fence 150 ' (46 m) to less than 300' (92 m) to corner, end or gate post.

Three bays of bracing for run of fence 300' (92 m) or more to corner, end, gate or pull post.

CORNER OR END POST

NOTES

Barbed wires shall be stapled to each post. Top and bottom wire of woven fence shall be stapled to each post. Staple every other wire between, alternating on successive posts.

Metal line posts may be used in lieu of wood line posts.

Illinois Department of Transportation

PASSED January 1, 2009
ENGINEER OF POLICY AND PROCEDURES

APPROVED January 1, 2009
ENGINEER OF DESIGN AND ENVIRONMENT

ISSUED 1-1-97

WOVEN WIRE FENCE

(Sheet 2 of 4)

STANDARD 665001-02

METAL ITEMS

GATE FRAMES		CORNER, END or PULL POSTS		LINE POSTS		BRACES	
Section	lbs./ft. (kg/m)	Section	lbs./ft. kg/m	Section	lbs./ft. (kg/m)	Section	lbs./ft. (kg/m)
Type A: Pipe 1.66 (42.2) O.D.	2.27 (3.38)	Type A: Pipe 2.375 (60.3) O.D.	3.65 (5.43)	Type A: Pipe 1.315 (33.4) O.D.	1.68 (2.50)	Type A: Pipe 1.66 (42.2) O.D.	2.27 (3.38)
Type B: Pipe 1.66 (42.2) O.D.	1.83 (2.72)	Type B: Pipe 2.375 (60.3) O.D.	3.11 (4.63)	Type B: Pipe 1.315 (33.4) O.D.	1.34 (1.99)	Type B: Pipe 1.66 (42.2) O.D.	1.83 (2.72)
Type C: Pipe 1.66 (42.2) O.D.	1.82 (2.71)	Type C: Pipe 2.375 (60.3) O.D.	3.09 (4.60)	Type C: Pipe 1.315 (33.4) O.D.	1.33 (1.98)	Type C: Pipe 1.66 (42.2) O.D.	1.82 (2.71)
		Tubing 2.5 (63.5) Sq.	4.32 (6.43)	Tubing 1 (25.4) Sq.	1.41 (2.10)		
		Angle 2½x2½x¼ (64x64x6.4)	4.1 (6.10)			Angle 2½x2½x¼ (64x64x6.4)	3.19 (4.75)
		H, I, U, structural shapes	4.1 (6.10) min.	L, C, T, U, Y or other approved structural shapes	1.33 (1.98) min.	or other approved structural shapes	3.1 (4.61) min.

METAL ITEMS

GATE POSTS

Single gate up to 4 ft. (1.22 m) Double gate up to 8 ft. (2.44 m)		over 4 ft. to 8 ft. (1.22 m to 2.44 m) over 8 ft. to 16 ft. (2.44 m to 4.88 m)		over 8 ft. to 12 ft. (2.44 m to 3.66 m) over 16 ft. to 24 ft. (4.88 m to 7.32 m)	
Section	lbs./ft. (kg/m)	Section	lbs./ft. (kg/m)	Section	lbs./ft. (kg/m)
Type A: Pipe 2.375 (60.3) O.D.	3.65 (5.43)	2.875 (73.0) O.D.	5.79 (8.62)	3.500 (88.9) O.D.	7.58 (11.28)
Type B: Pipe 2.375 (60.3) O.D.	3.11 (4.63)	2.875 (73.0) O.D.	4.64 (6.91)		
Type C: Pipe 2.375 (60.3) O.D.	3.09 (4.60)	2.875 (73.0) O.D.	3.78 (5.63)		
Tubing 2.5 (63.5) Sq.	4.32. (6.43)	3 (76.2) Sq.	5.78 (8.60)	3 (76.2) Sq.	8.80 (31.10)
Angle 2½x2½x¼ 64x64x6.4	4.1 (6.10)	3x3x5/16 (76x76x7.9)	6.1 (9.08)	3½x3½x⅜ (76x76x9.5)	8.5 (10.70)
H, I, U, structural shapes	4.1 (6.10) min.		6.1 (9.08) min.		8.5 (10.70) min.

WOOD ITEMS

(S4S or Rough Sawn)

GATE, CORNER, END or PULL POSTS	BRACES and LINE POSTS	BLOCKS
6 to 7 (150 to 175) Top dia. 6x6 (150x150)	4 to 5 (100 to 125) Top dia. 4x4 (100x100)	2x8x18 (50x200x450)

Illinois Department of Transportation

PASSED January 1, 2009
ENGINEER OF POLICY AND PROCEDURES

APPROVED January 1, 2009
ENGINEER OF DESIGN AND ENVIRONMENT

ISSUED 1-1-97

WOVEN WIRE FENCE

(Sheet 3 of 4)

STANDARD 665001-02

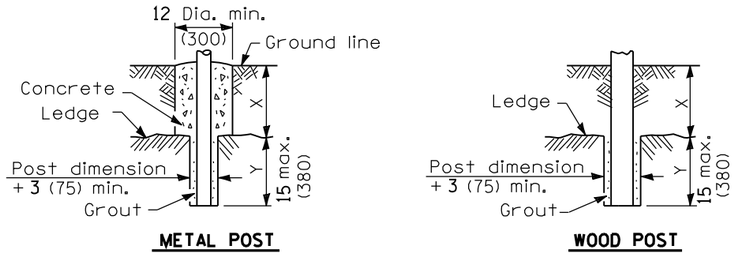

NOTE

X + Y shall not exceed 27 (685), 33 (840), or 3'-9" (1.14 m) as applicable. When X is 0 to 12 (300), 18 (450), or 30 (760), Y = 15 (380), and the post shall be shortened as required. When X exceeds 12 (300), 18 (450), or 30 (760), Y shall be decreased correspondingly.

FOOTING FOR POSTS WHEN ROCK LEDGE IS ENCOUNTERED

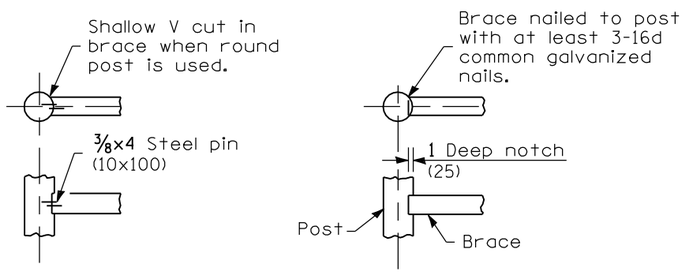

ALTERNATE DETAILS FOR FASTENING WOOD BRACE TO WOOD POST

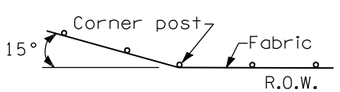

NOTE

Where fence line has a change in direction of 15° of more, a corner post with bracing as required shall be placed as shown above. Where angle is less than 15° and existing conditions require a corner post, they shall be placed as directed by the Engineer.

INSTALLATION AT CORNERS

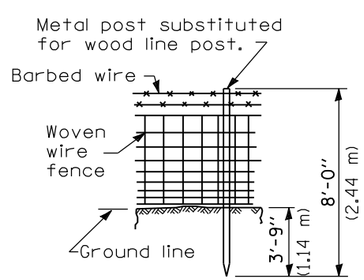

PROTECTIVE ELECTRICAL GROUNDING FOR WOOD POST FENCE INSTALLATION

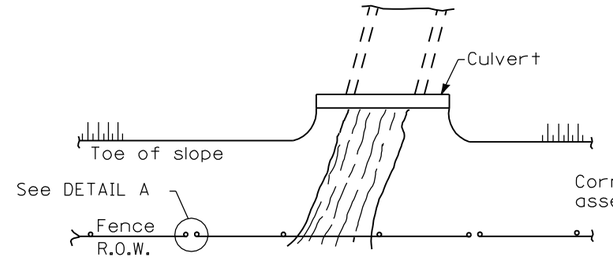

PLAN AT STREAM CROSSING

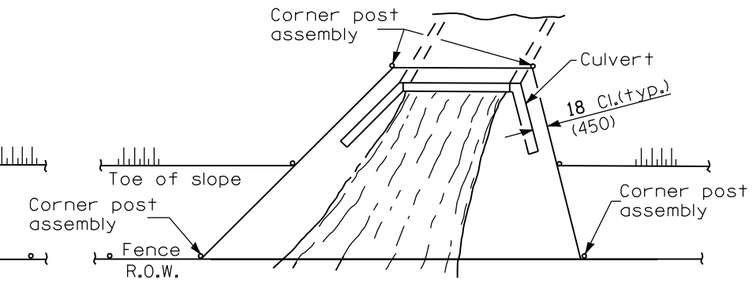

PLAN AT HEADWALL

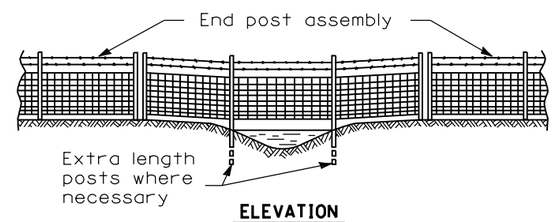

ELEVATION

NOTE

The woven wire fabric shall be replaced by barbed wire strands at 12 (300) maximum centers between the double posts shown on DETAIL A when shown on the plans.

INSTALLATION OVER STREAM

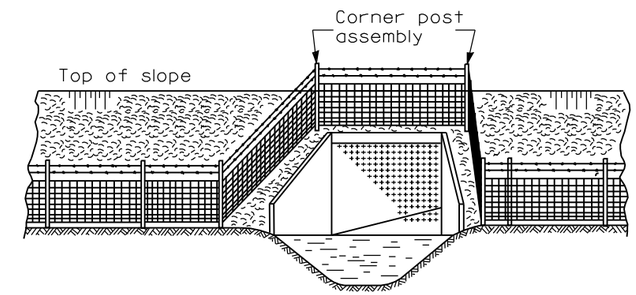

ELEVATION

NOTE

When the width of the culvert makes it necessary to anchor a post to the top of the culvert, a cast iron shoe or other device approved by the Engineer shall be used.

INSTALLATION AROUND HEADWALL

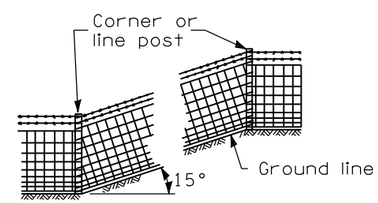

NOTE

Where grade line has a change in slope of 15° or more, a corner post with bracing as required shall be placed as shown above. Where angle is less than 15° line posts may be used.

When the tension of the fence tends to pull the posts from the ground, the line posts shall be anchored with the applicable concrete or wood anchorage specified for corner posts.

INSTALLATION ON SLOPES

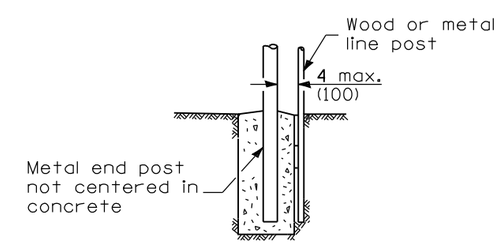

DETAIL A

Illinois Department of Transportation

PASSED January 1, 2009
ENGINEER OF POLICY AND PROCEDURES
APPROVED January 1, 2009
ENGINEER OF DESIGN AND ENVIRONMENT

ISSUED 1-1-97

WOVEN WIRE FENCE

(Sheet 4 of 4)

STANDARD 665001-02

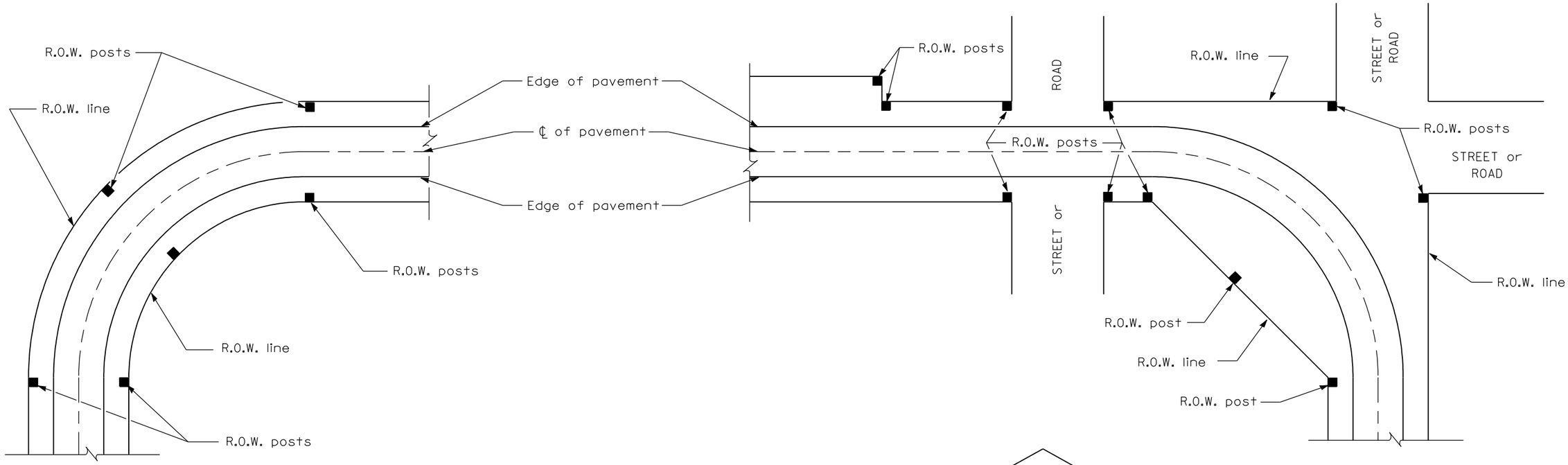

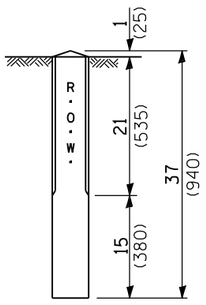

METHOD B

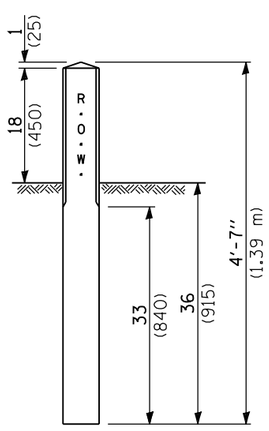

METHOD A

* 2 (50) When shadow box is used.

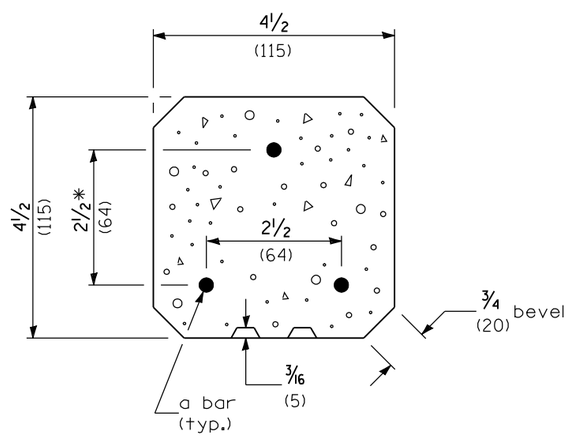

SECTION A-A

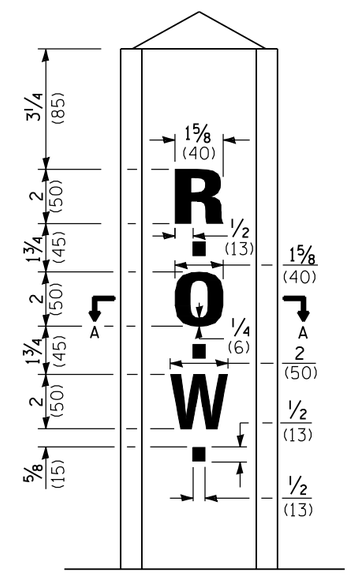

METHOD A	4'-0" (1.2 m)
METHOD B	30 (750)

a BAR

GENERAL NOTE

Reinforcement bars shall be No. 3 (No. 10) unless otherwise specified.

A 2¾×12⅛ (70×310) shadow box with beveled edges, and a 3/16 (5) thick indentation may be used with the standard lettering shown.

All dimensions are in inches (millimeters) unless otherwise shown.

Illinois Department of Transportation

PASSED January 1, 2009
ENGINEER OF POLICY AND PROCEDURES
APPROVED January 1, 2009
ENGINEER OF DESIGN AND ENVIRONMENT

ISSUED 1-1-97

DATE	REVISIONS
1-1-09	Switched units to English (metric).
1-1-97	Renum. Standard 1744-6.

RIGHT OF WAY MARKERS

STANDARD 666001-01

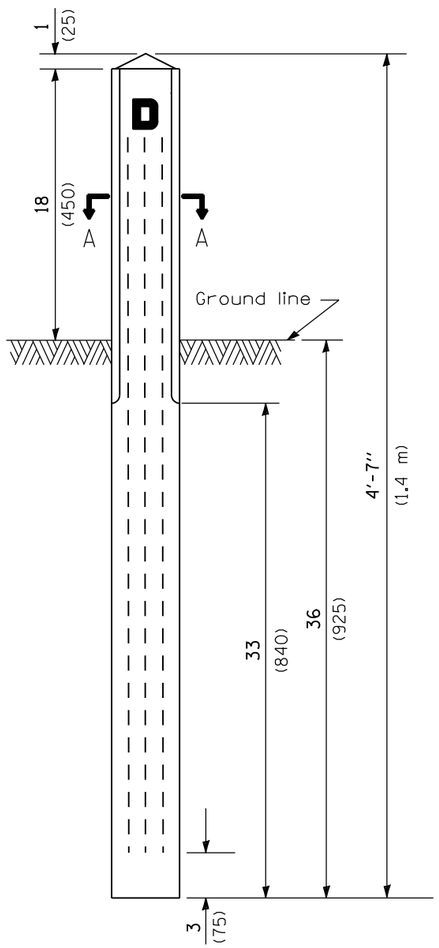

FRONT ELEVATION

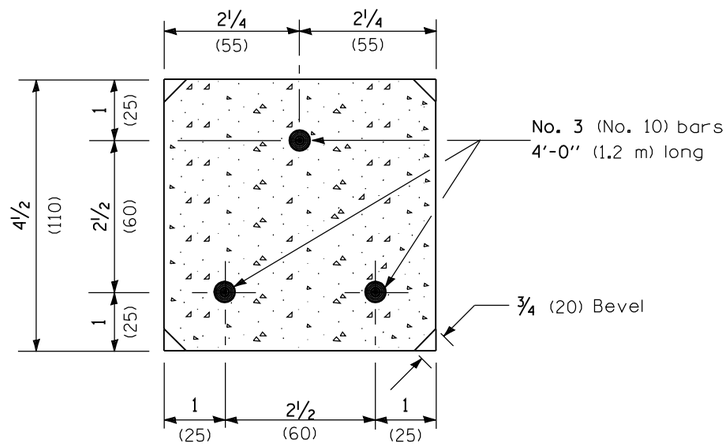

SECTION A-A

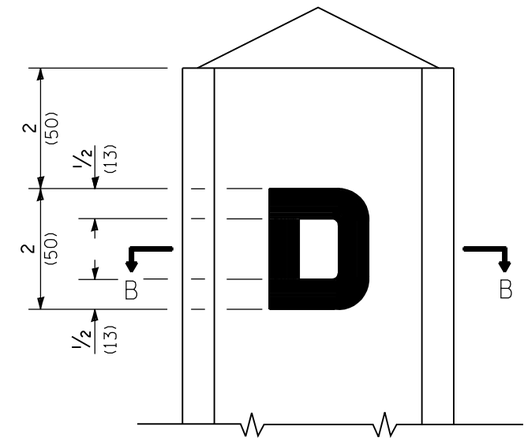

DETAIL OF LETTER

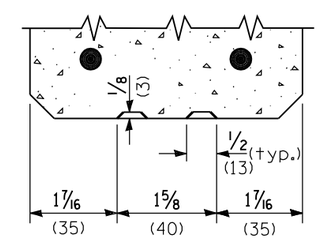

SECTION B-B

All dimensions are in inches (millimeters) unless otherwise shown.

Illinois Department of Transportation

PASSED January 1, 2009
ENGINEER OF POLICY AND PROCEDURES

APPROVED January 1, 2009
ENGINEER OF DESIGN AND ENVIRONMENT

ISSUED 1-1-97

DATE	REVISIONS
1-1-09	Switched units to English (metric).
1-1-97	Renum. Standard 1999-4.

DRAINAGE MARKERS

STANDARD 667001-01

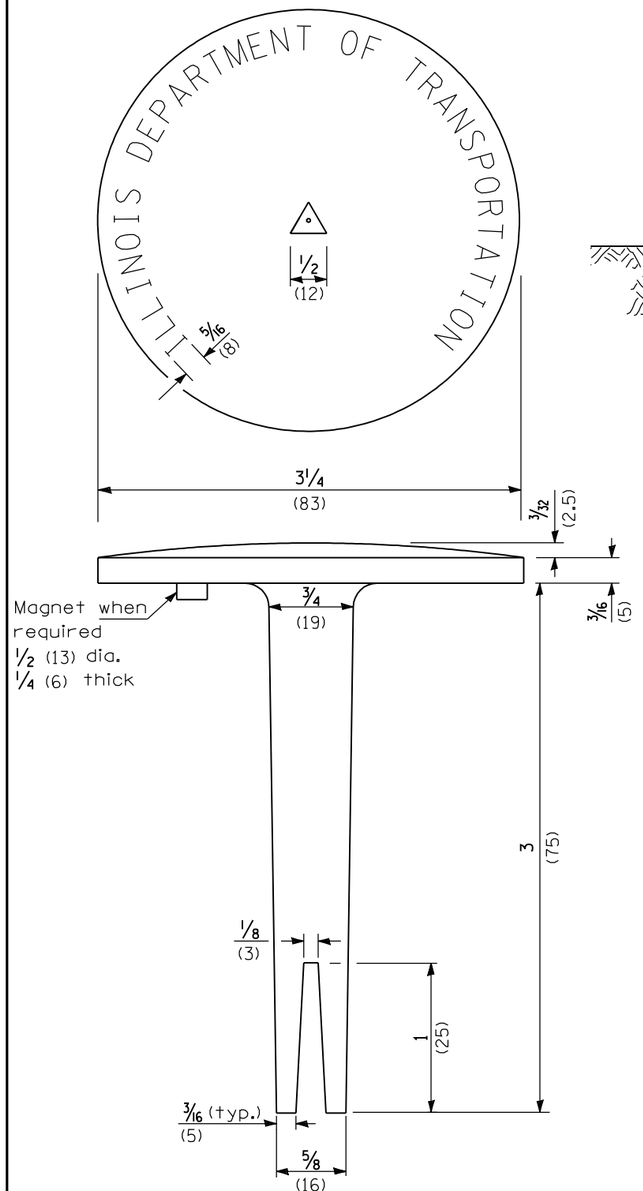

ALUMINUM TABLET

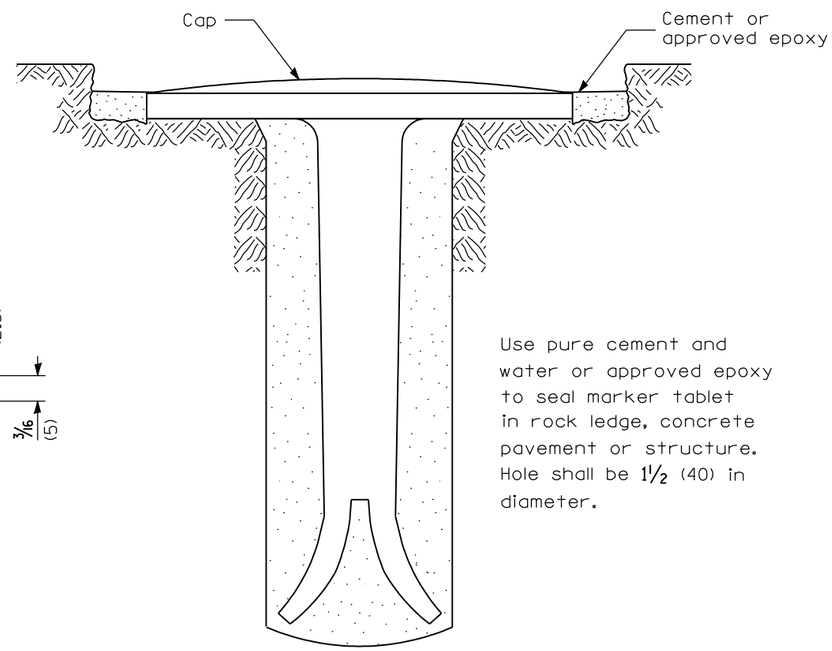

Use pure cement and water or approved epoxy to seal marker tablet in rock ledge, concrete pavement or structure. Hole shall be 1 1/2 (40) in diameter.

Tablet constructed in rock ledge or concrete.

TYPE I

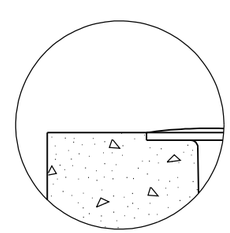

DETAIL A

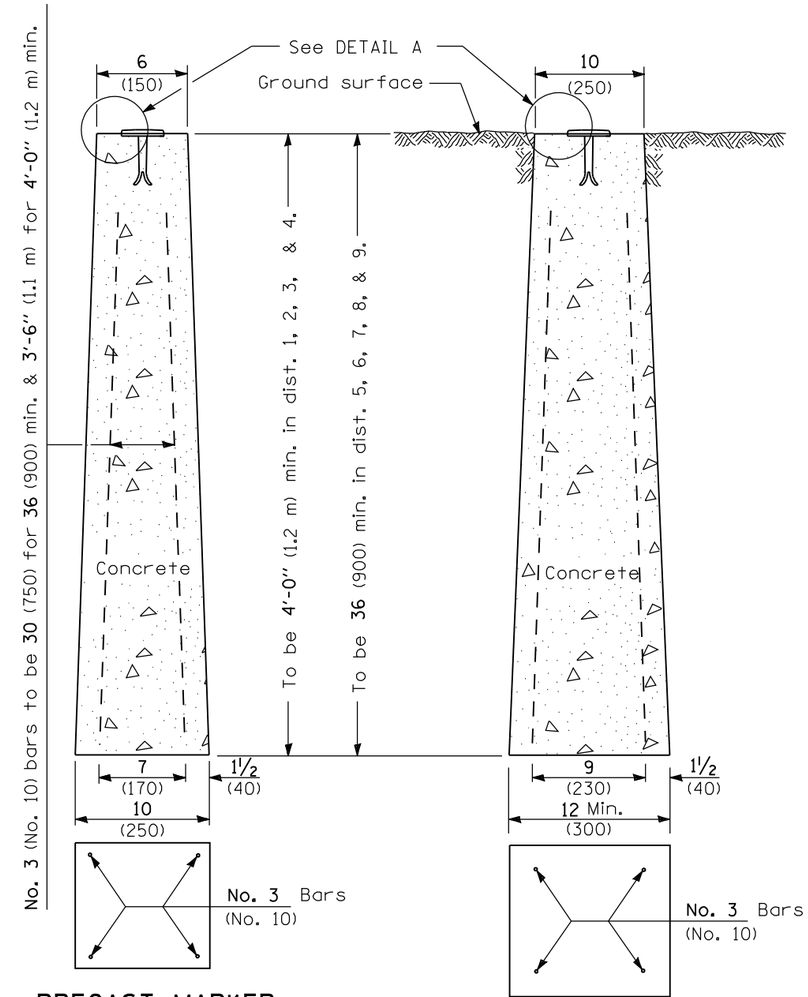

PRECAST MARKER

CAST-IN-PLACE MARKER

TYPE II

All dimensions are in inches (millimeters) unless otherwise shown.

Illinois Department of Transportation

PASSED January 1, 2009
ENGINEER OF POLICY AND PROCEDURES
APPROVED January 1, 2009
ENGINEER OF DESIGN AND ENVIRONMENT

ISSUED 1-1-97

DATE	REVISIONS
1-1-09	Switched units to English (metric).
1-1-97	Renum. Standard 2135-1.

PERMANENT SURVEY MARKERS

STANDARD 667101-01

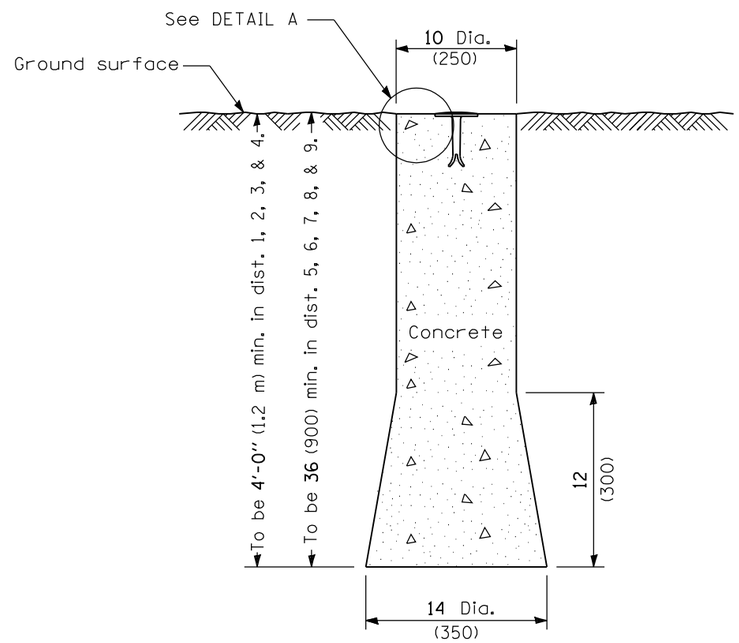

ELEVATION

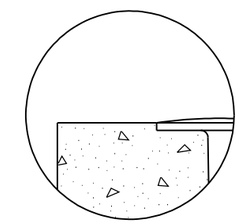

DETAIL A

All dimensions are in inches (millimeters) unless otherwise shown.

DATE	REVISIONS
1-1-09	Switched units to English (metric).
1-1-97	Renum. Standard 2448. Revised depth.

U.S. GEOLOGICAL SURVEY AND NATIONAL GEODETIC SURVEY BENCHMARKS RESETTING METHOD

STANDARD 668001-01

Illinois Department of Transportation

PASSED January 1, 2009
ENGINEER OF POLICY AND PROCEDURES

APPROVED January 1, 2009
ENGINEER OF DESIGN AND ENVIRONMENT

ISSUED 1-1-97

TYPICAL APPLICATIONS

Landscaping work

Utility work

Fencing contracts and maintenance

Cleaning culverts

GENERAL NOTES

This Standard is used where at all times all vehicles, equipment, workers or their activities are more than 15' (4.5 m) from the edge of pavement.

When the work operation requires that two or more work vehicles cross the 15' (4.5 m) clear zone in any one hour, traffic control shall be according to Standard 701006.

All dimensions are in inches (millimeters) unless otherwise shown.

Illinois Department of Transportation

APPROVED January 1, 2009
ENGINEER OF OPERATIONS

APPROVED January 1, 2009
ENGINEER OF DESIGN AND ENVIRONMENT

ISSUED 1-1-97

DATE	REVISIONS
1-1-09	Switched units to English (metric).
1-1-05	Revised title and notes.

OFF-RD OPERATIONS, 2L, 2W, MORE THAN 15' (4.5 m) AWAY

STANDARD 701001-02

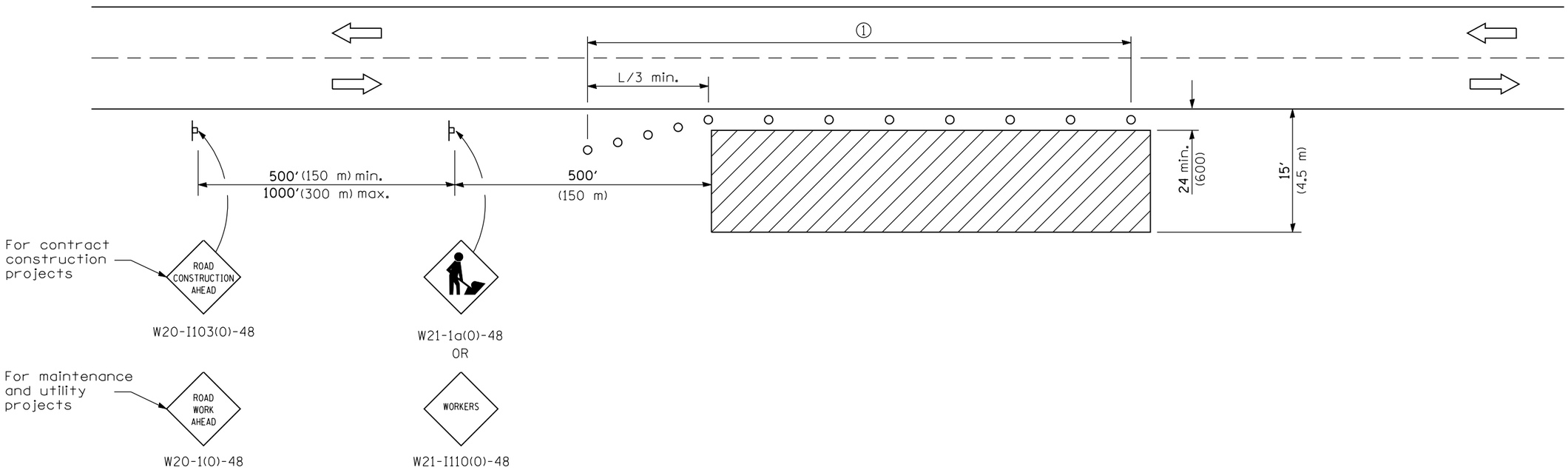

TYPICAL APPLICATIONS

Utility operations
Culvert extensions
Side slope changes
Guardrail installation and maintenance
Delineator installation
Landscaping operations
Shoulder repair
Sign installation and maintenance

SYMBOLS

Work area

Sign

Cone, drum or barricade

① When the work operation exceeds one hour, cones, drums or barricades shall be placed at 25′ (8 m) centers for L/3 distance, and at 50′ (15 m) centers through the remainder of the work area.

GENERAL NOTES

This Standard is used where any vehicles, equipment, workers or their activities will encroach in the area 15′ (4.5 m) to 24 (600) from the edge of pavement.

Calculate L as follows:

SPEED LIMIT	FORMULAS English	FORMULAS (Metric)
40 mph (70 km/h) or less:	$L = \frac{WS^2}{60}$	$L = \frac{WS^2}{150}$
45 mph (80 km/h) or greater:	L=(W)(S)	L=0.65(W)(S)

W = Width of offset in feet (meters).

S = Normal posted speed mph (km/h).

All dimensions are in inches (millimeters) unless otherwise shown.

Illinois Department of Transportation

APPROVED January 1, 2009
ENGINEER OF OPERATIONS

APPROVED January 1, 2009
ENGINEER OF DESIGN AND ENVIRONMENT

ISSUED 1-1-97

DATE	REVISIONS
1-1-09	Switched units to
	English (metric).
	Corrected sign No.'s.
1-1-05	Revised title,notes,
	and sign spacing.

OFF-RD OPERATIONS, 2L, 2W, 15′ (4.5 m) TO 24″ (600 mm) FROM PAVEMENT EDGE

STANDARD 701006-03

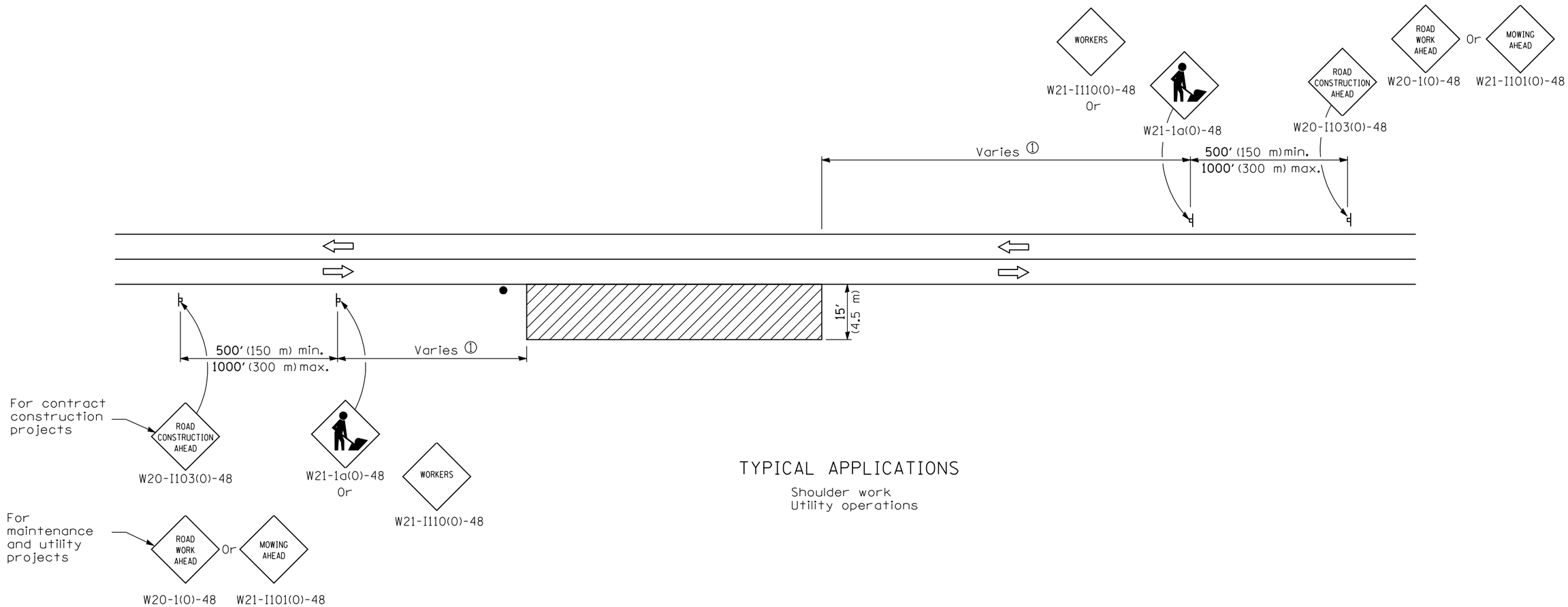

TYPICAL APPLICATIONS

Shoulder work
Utility operations

① Minimum distance is 200' (60 m). Maximum distance to be determined by the Engineer but should not exceed ½ the length required for one normal working day's operation, or 4 miles (6.4 km) which ever is less.

SYMBOLS

Work area

Sign

Flagger with traffic control sign when required

GENERAL NOTES

This Standard is used where at any time, any vehicle, equipment. workers or their activities require an intermittent or continuous moving operation on the shoulder, where the average speed is 1 mph (2 km/h) or less.

When the work operation does not exceed 60 minutes, traffic control may be according to Standard 701301.

All dimensions are in inches (millimeters) unless otherwise shown.

Illinois Department of Transportation

APPROVED January 1, 2009
ENGINEER OF OPERATIONS

APPROVED January 1, 2009
ENGINEER OF DESIGN AND ENVIRONMENT

ISSUED 1-1-97

DATE	REVISIONS
1-1-09	Switched units to
	English (metric).
	Corrected sign No.'s.
1-1-05	Revised title, notes,
	and sign spacing.

OFF-RD MOVING OPERATIONS, 2L, 2W, DAY ONLY

STANDARD 701011-02

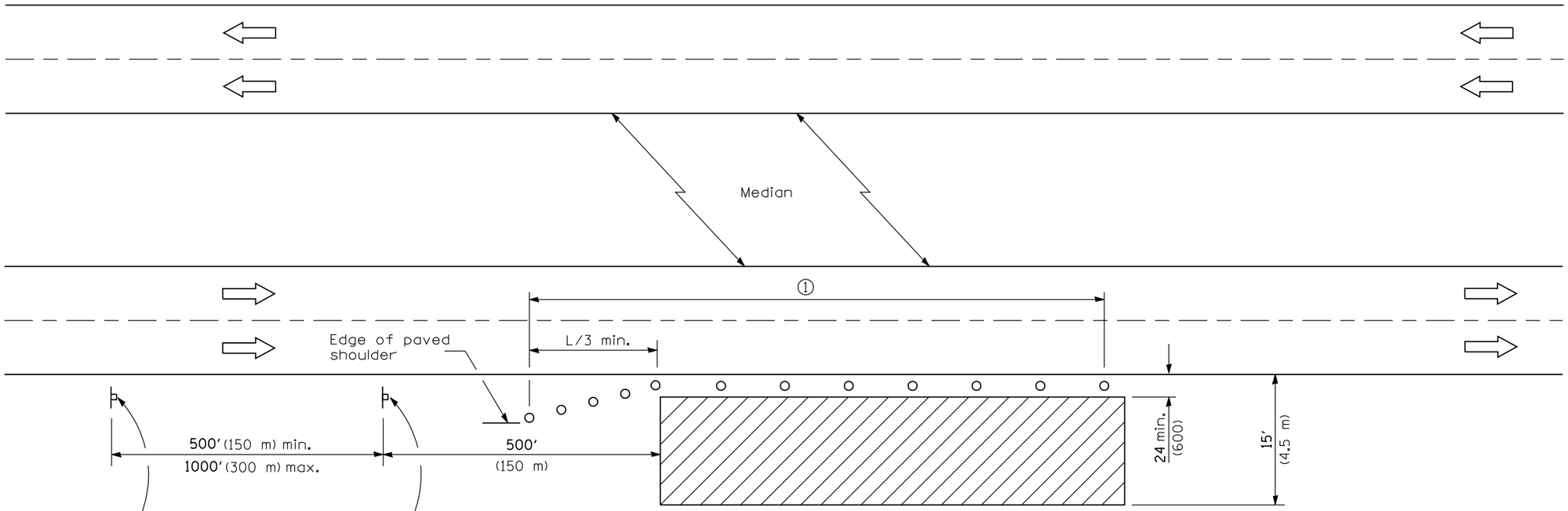

For contract construction projects

W20-I103(0)-48

W21-1a(0)-48

Or

W21-I110(0)-48

For maintenance and utility projects

W20-1(0)-48

TYPICAL APPLICATIONS

Utility operations
Culvert extensions
Side slope changes
Guardrail installation and maintenance
Delineator installation
Landscaping operations
Shoulder repair
Sign installation and maintenance

① When the work operation exceeds one hour, cones, drums or barricades shall be placed at 8 m (25′) centers for L/3 distance, and at 15 m (50′) centers through the remainder of the work area.

SYMBOLS

Work area

Sign

Cone, drum or barricade

GENERAL NOTES

This Standard is used where any vehicles, equipment, workers or their activities will encroach in the area 15′ (4.5 m) to 24 (600) from the edge of pavement.

Calculate L as follows:

SPEED LIMIT	FORMULAS	
	English	(Metric)
40 mph (70 km/h) or less:	$L = \frac{WS^2}{60}$	$L = \frac{WS^2}{150}$
45 mph (80 km/h) or greater:	L=(W)(S)	L=0.65(W)(S)

W = Width of offset in feet (meters).

S = Normal posted speed mph (km/h).

All dimensions are in inches (millimeters) unless otherwise shown.

Illinois Department of Transportation

APPROVED January 1, 2009
ENGINEER OF OPERATIONS

APPROVED January 1, 2009
ENGINEER OF DESIGN AND ENVIRONMENT

ISSUED 1-1-97

DATE	REVISIONS
1-1-09	Switched units to
	English (metric).
	Corrected sign No.'s.
1-1-05	Revised title, notes.
	and sign spacing.

OFF-RD OPERATIONS, MULTILANE, 15′ (4.5 m) TO 24 ″ (600 mm) FROM PAVEMENT EDGE

STANDARD 701101-02

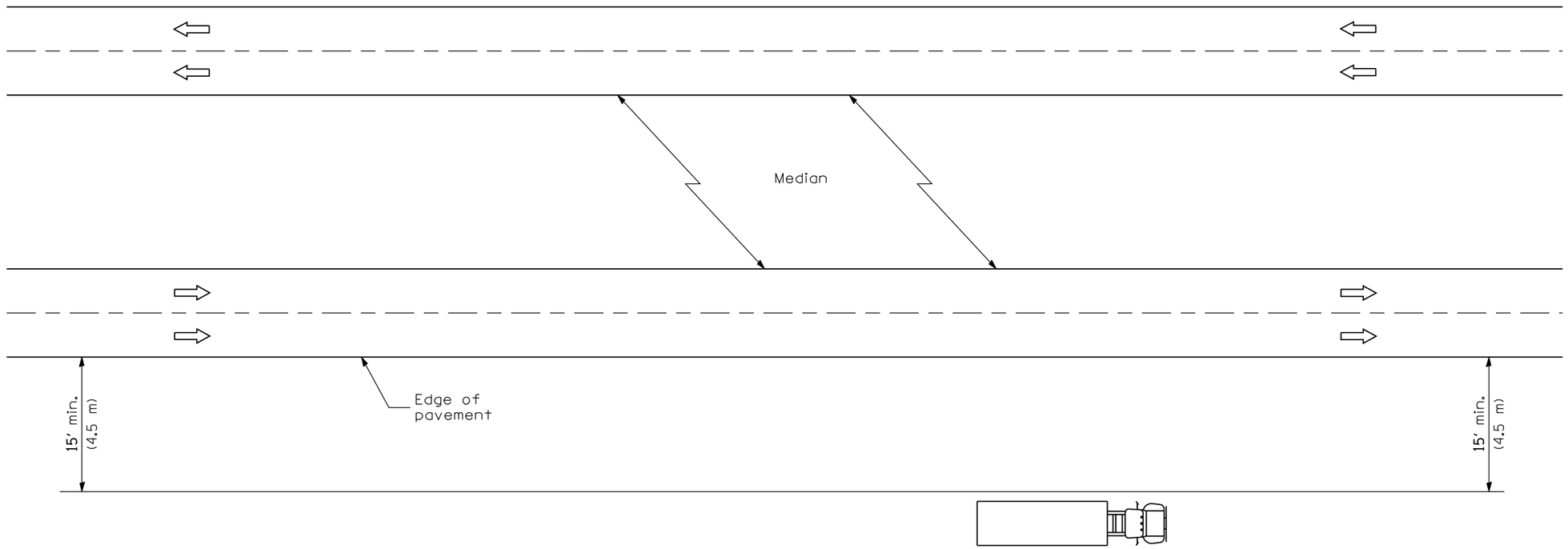

TYPICAL APPLICATIONS

Landscaping work
Utility work
Fencing contracts

GENERAL NOTES

This Standard is used where at all times all vehicles, equipment, workers or their activities are more than 15' (4.5 m) from the edge of pavement.

When the work operation requires that two or more work vehicles cross the 15' (4.5 m) clear zone in any one hour, traffic control shall be according to Standard 701101.

This Standard also applies to work performed in the median more than 15' (4.5 m) from either pavement.

All dimensions are in inches (millimeters) unless otherwise shown.

Illinois Department of Transportation

APPROVED January 1, 2009
ENGINEER OF OPERATIONS

APPROVED January 1, 2009
ENGINEER OF DESIGN AND ENVIRONMENT

ISSUED 1-1-97

DATE	REVISIONS
1-1-05	Switched units to English (metric).
1-1-05	Revised title.

OFF-RD OPERATIONS, MULTILANE, MORE THAN 15' (4.5 m) AWAY

STANDARD 701106-02

① Cones at 25′ (8 m) centers for 250′ (75 m). Additional cones may be placed at 50′ (15 m) centers. When drums or barricades are used, the interval between devices may be doubled.

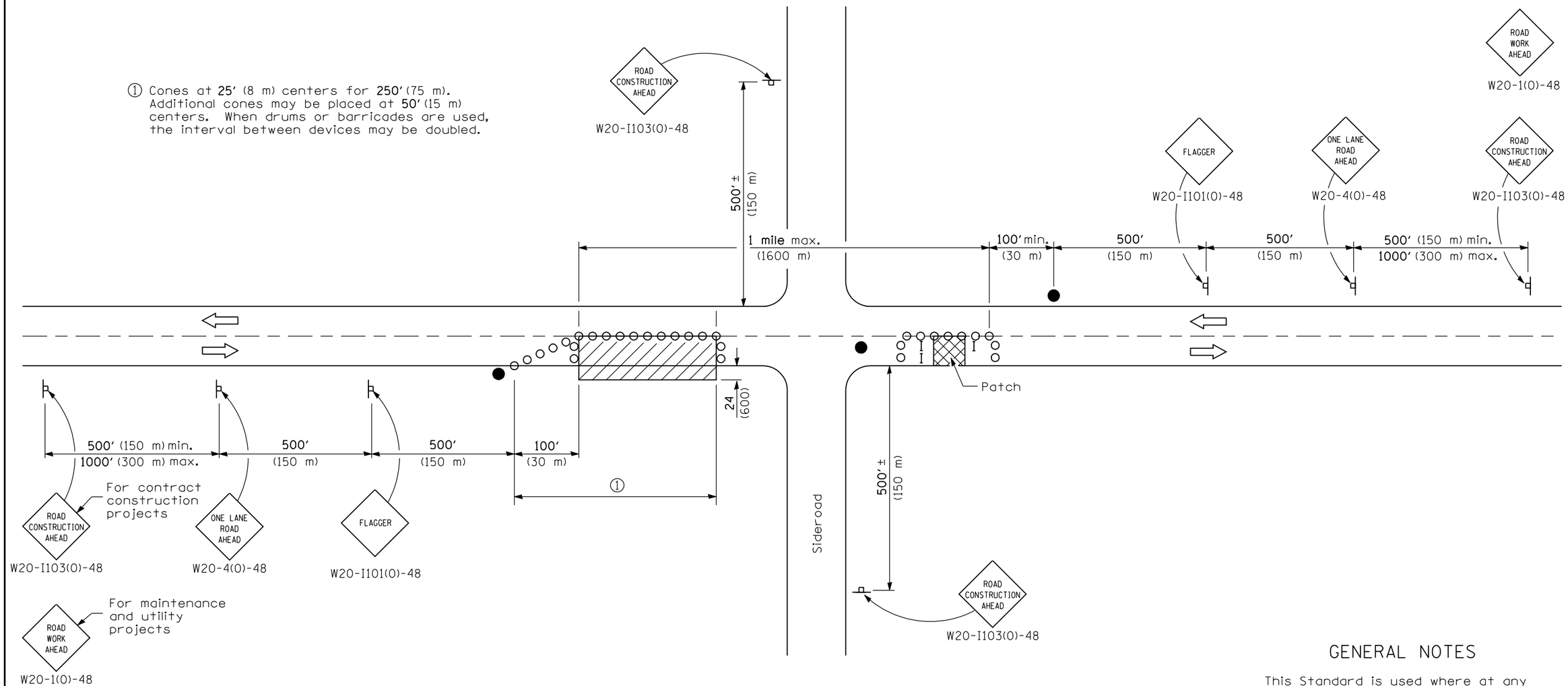

GENERAL NOTES

This Standard is used where at any time, any vehicles, equipment, workers or their activities will encroach in the area between the center line and a line 24 (600) outside the edge of pavement for daylight operation.

When the distance between successive work areas exceeds 2000′ (600 m), additional warning signs, flaggers, and taper shall be placed as shown.

All dimensions are in inches (millimeters) unless otherwise shown.

SYMBOLS

- Work area
- Sign
- Barricade or drum
- Cone, drum or barricade
- Flagger with traffic control sign

TYPICAL APPLICATIONS

Isolated patching
Utility operations
Storm sewer
Culverts
Cable placement

Illinois Department of Transportation

APPROVED January 1, 2009
ENGINEER OF OPERATIONS

APPROVED January 1, 2009
ENGINEER OF DESIGN AND ENVIRONMENT

ISSUED 1-1-97

DATE	REVISIONS
1-1-09	Switched units to
	English (metric).
	Corrected sign No.'s.
1-1-05	Revised title and notes.
	Moved flagger.

LANE CLOSURE, 2L, 2W, DAY ONLY, FOR SPEEDS ≥ 45 MPH

STANDARD 701201-03

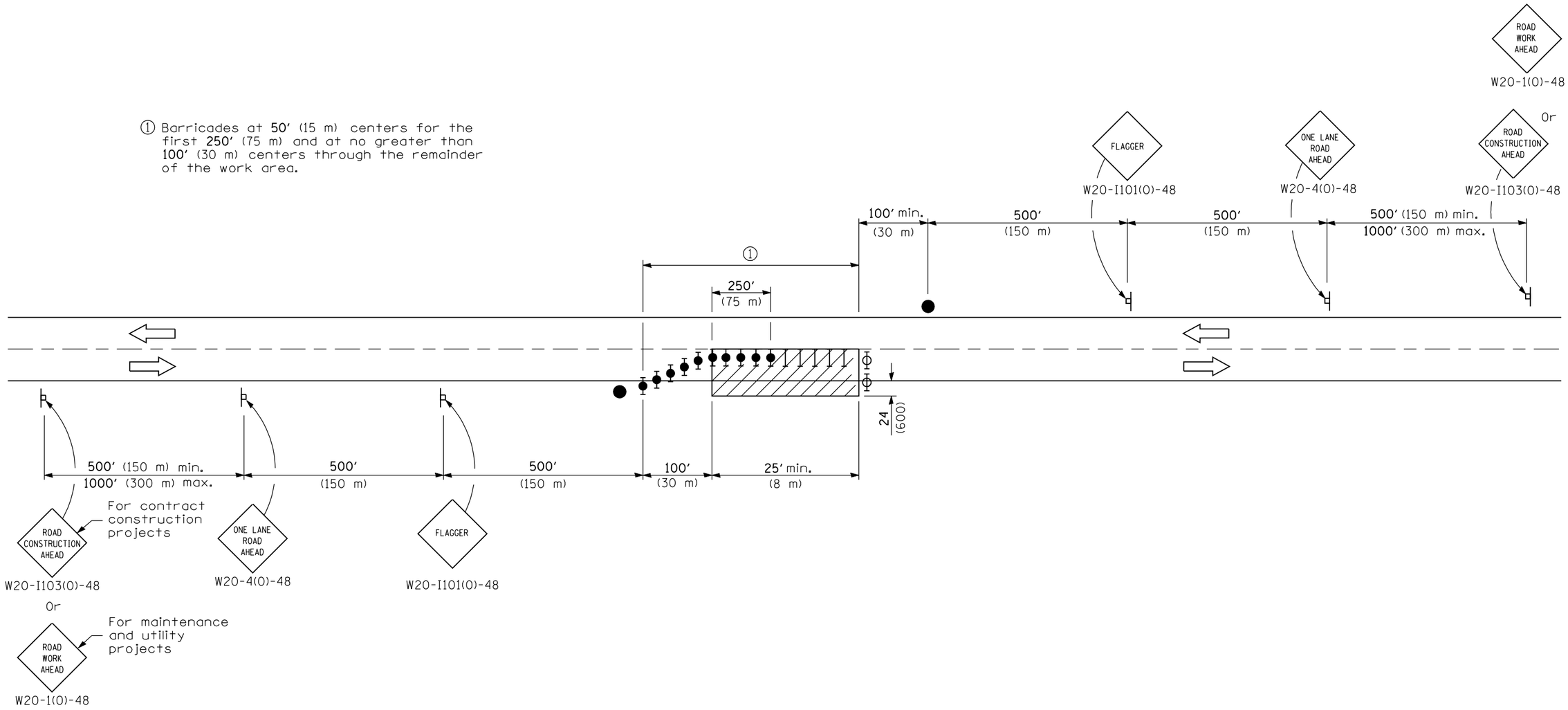

TYPICAL APPLICATIONS

Isolated patch
Installation of drainage structure
Utility operations

SYMBOLS

- Work area
- Sign
- Flagger with traffic control sign
- Barricade or drum
- Barricade or drum with flashing light
- Barricade or drum with steady burning light

GENERAL NOTES

This Standard is used where at any time, any vehicle, equipment, workers or their activities will encroach in the area between the center line and a line 24 (600) from the edge of pavement for nighttime operation.

All dimensions are in inches (millimeters) unless otherwise shown.

Illinois Department of Transportation

APPROVED January 1, 2009
ENGINEER OF OPERATIONS

APPROVED January 1, 2009
ENGINEER OF DESIGN AND ENVIRONMENT

ISSUED 1-1-97

DATE	REVISIONS
1-1-09	Switched units to
	English (metric).
	Corrected sign No.'s.
1-1-05	Revised title and notes.

LANE CLOSURE, 2L, 2W, NIGHT ONLY, FOR SPEEDS ≥ 45 MPH

STANDARD 701206-02

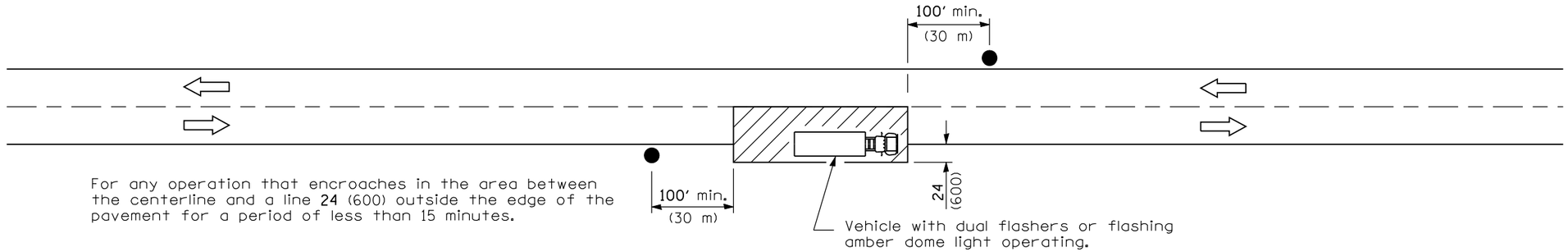

For any operation that encroaches in the area between the centerline and a line 24 (600) outside the edge of the pavement for a period of less than 15 minutes.

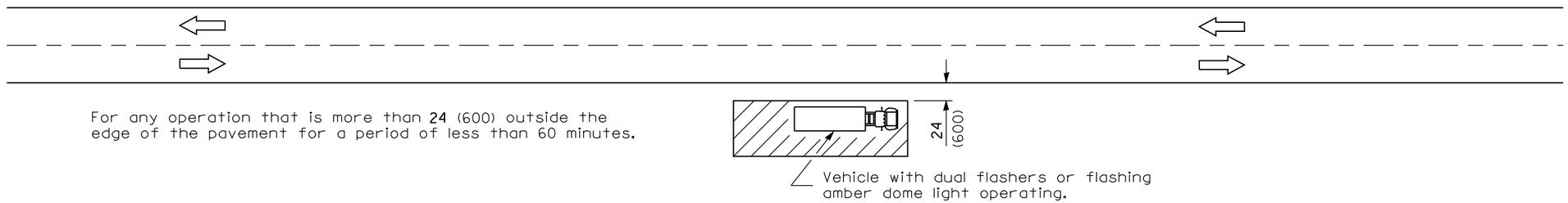

For any operation that is more than 24 (600) outside the edge of the pavement for a period of less than 60 minutes.

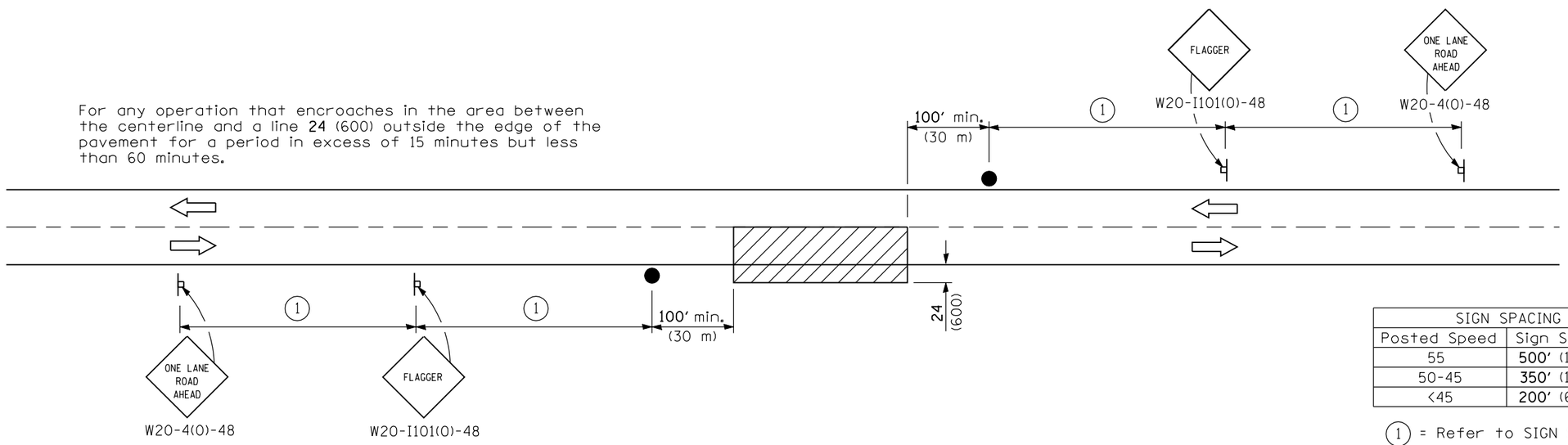

For any operation that encroaches in the area between the centerline and a line 24 (600) outside the edge of the pavement for a period in excess of 15 minutes but less than 60 minutes.

SIGN SPACING	
Posted Speed	Sign Spacing
55	500′ (150 m)
50-45	350′ (100 m)
<45	200′ (60 m)

(1) = Refer to SIGN SPACING table for distances.

All dimensions are in inches (millimeters) unless otherwise shown.

TYPICAL APPLICATIONS

Marking patches
Field survey
String line
Utility operations
Cleaning up debris on pavement

SYMBOLS

Work area

Sign on portable or permanent support

Flagger with traffic control sign

DATE	REVISIONS
1-1-09	Switched units to English (metric).
1-1-05	Deleted FLAGGER SYMBOL sign.

LANE CLOSURE, 2L, 2W, SHORT TIME OPERATIONS

STANDARD 701301-03

Illinois Department of Transportation

APPROVED January 1, 2009
ENGINEER OF OPERATIONS

APPROVED January 1, 2009
ENGINEER OF DESIGN AND ENVIRONMENT

ISSUED 1-1-97

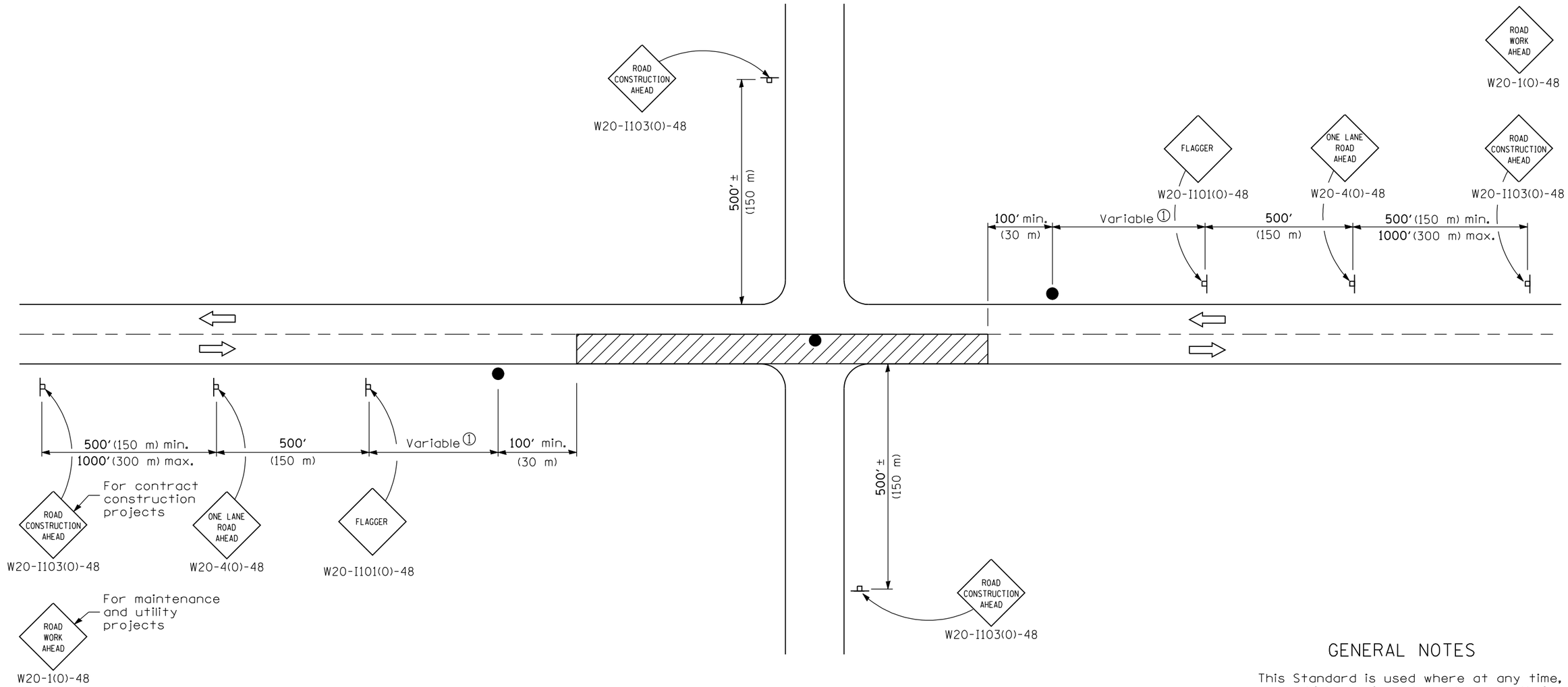

TYPICAL APPLICATIONS

Bituminous resurfacing
Milling operations
Utility operations
Shoulder operations

① Minimum distance is 200′ (60 m). Maximum distance to be determined by the Engineer but should not exceed ½ the length required for one normal working day's operation or 2 miles (3200 m), whichever is less.

SYMBOLS

Work area

Sign on portable or permanent support

Flagger with traffic control sign

GENERAL NOTES

This Standard is used where at any time, any vehicle, equipment, workers or their activities require an intermittent or continuous moving operation on the pavement where the average speed of movement is greater than 1 mph (2 km/h) and less than 4 mph (6 km/h).

When the operation does not exceed 60 minutes, traffic control may be according to Standard 701301.

All dimensions are in inches (millimeters) unless otherwise shown.

Illinois Department of Transportation

APPROVED January 1, 2009
ENGINEER OF OPERATIONS

APPROVED January 1, 2009
ENGINEER OF DESIGN AND ENVIRONMENT

ISSUED 1-1-97

DATE	REVISIONS
1-1-09	Switched units to
	English (metric).
	Corrected sign No.'s.
1-1-05	Deleted FLAGGER SYMBOL
	sign and revised sign
	spacing.

LANE CLOSURE, 2L, 2W, SLOW MOVING OPERATIONS DAY ONLY, FOR SPEEDS ≥ 45 MPH

STANDARD 701306-02

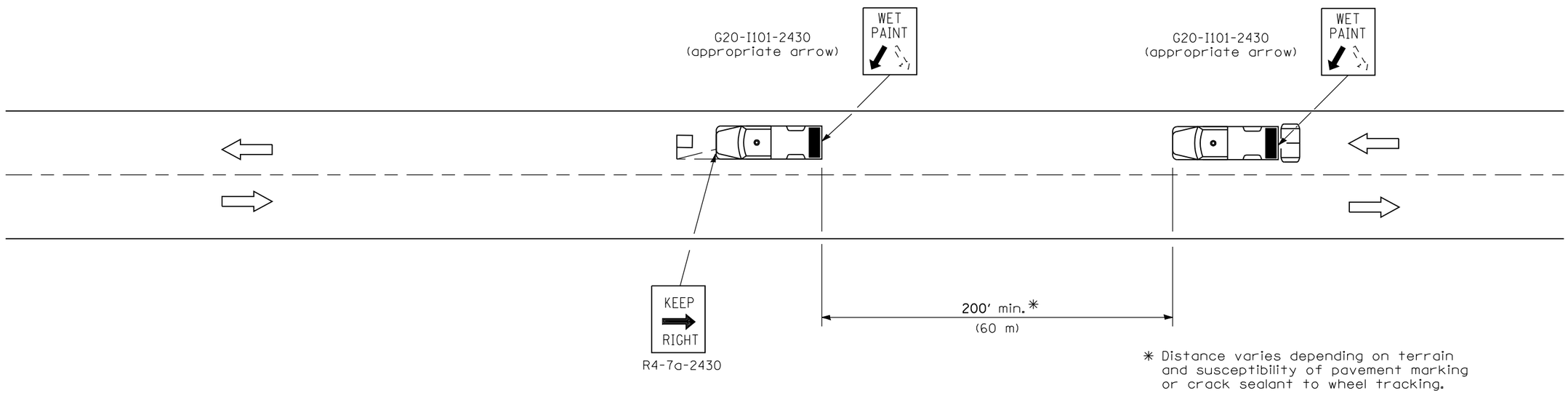

TYPICAL APPLICATIONS

- Landscaping work
- Utility work
- Pavement marking
- Weed spraying
- Roadometer measurements
- Debris cleanup
- Crack pouring

SYMBOLS

- Arrow board (Hazard Mode only)
- Truck with headlights, emergency flashers and flashing amber light. (visible from all directions)
- 18x18 (450x450) min. orange flag (use when guide wheel is used)
- Truck mounted attenuator

GENERAL NOTES

This Standard is used where any vehicle, equipment, workers or their activities will require a continuous moving operation where the average speed is greater than 3 mph (5 km/h).

For shoulder operations not encroaching on the pavement, use DETAIL A, Standard 701426.

All dimensions are in inches (millimeters) unless otherwise shown.

Illinois Department of Transportation

APPROVED January 1, 2009
ENGINEER OF OPERATIONS

APPROVED January 1, 2009
ENGINEER OF DESIGN AND ENVIRONMENT

ISSUED 1-1-97

DATE	REVISIONS
1-1-09	Switched units to
	English (metric). Omitted
	Pass With Care sign.
1-1-00	Elim. speed restrictions
	in Standard title.

LANE CLOSURE 2L, 2W MOVING OPERATIONS-DAY ONLY

STANDARD 701311-03

① Type III barricade to be placed when no work is being performed.

② Guardrai/parapetl markers at 25′ (7.6 m) cts. See Standards 704001 & 635011.

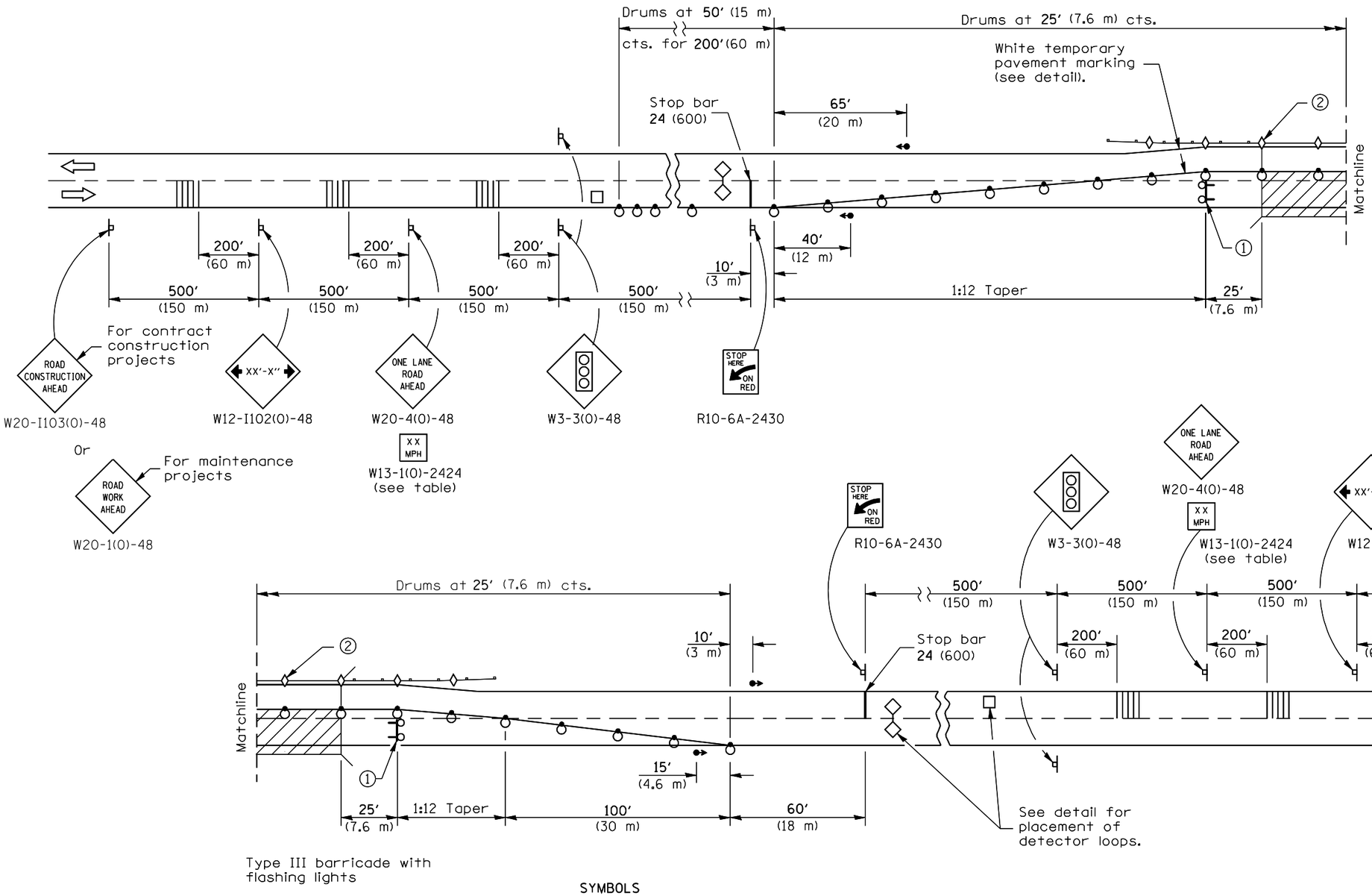

SYMBOLS

- Work area
- Sign
- Traffic signal
- Detector loops
- Type III barricade with flashing lights
- Drum with steady burning light
- Temporary rumble strip (when specified)
- Double vertical panel (see detail)
- Crystal, bidirectional parapet/guardrail marker

See Sheet 2 for GENERAL NOTES

Illinois Department of Transportation

APPROVED January 1, 2009
ENGINEER OF OPERATIONS
APPROVED January 1, 2009
ENGINEER OF DESIGN AND ENVIRONMENT

ISSUED 1-1-97

DATE	REVISIONS
1-1-09	Completely revised
	Standard. Switched units
	to English (metric).
1-1-05	Revised notes, deleted
	pavement markers and
	advisory speed sign.

LANE CLOSURE, 2L, 2W, BRIDGE REPAIR, FOR SPEEDS > 45 MPH

(Sheet 1 of 2)

STANDARD 701316-04

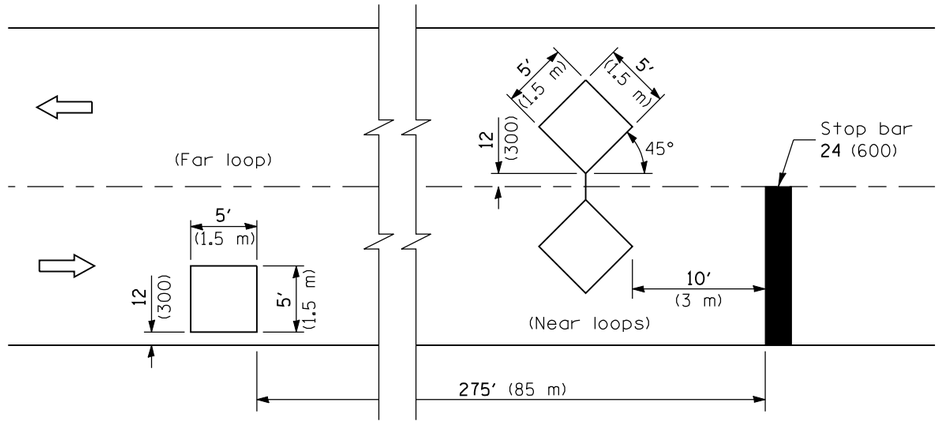

DETECTOR LOOPS

TRAFFIC SIGNAL SEQUENCE						
PHASE	A			B		
INTERVAL	1	2	3	4	5	6
NORTHBOUND OR EASTBOUND	G	Y	R	R	R	R
SOUTHBOUND OR WESTBOUND	R	R	R	G	Y	R

ADVISORY SPEED LIMIT	
NORMAL POSTED SPEED	ADVISORY SPEED
55 - 45 mph	40 mph
40 mph	35 mph
35 - 30 mph	30 mph

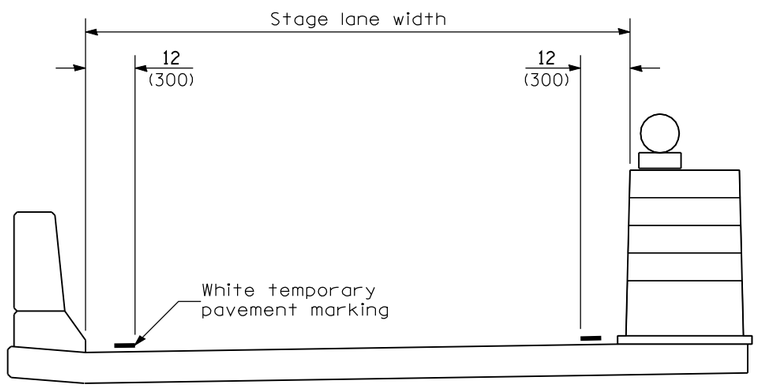

TEMPORARY PAVEMENT MARKING

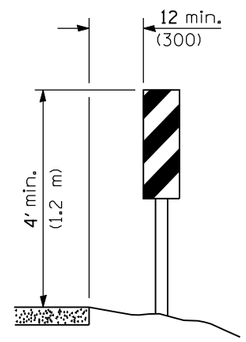

VERTICAL PANELS

(Post mounted, one each side)

GENERAL NOTES

This Standard is used where, at any time any vehicle, equipment, workers or their activities will encroach on one lane of a bridge and traffic signals are required.

When traffic signals are not in operation, flaggers shall be used and traffic control devices shall conform to Standard 701201 or 701206.

Bi-directional lights shall be used at night along the centerline where the work area is separated from the traveled lane using barricades or drums. Monodirectional lights shall be used at night on all other barricades or drums.

All dimensions are in inches (millimeters) unless otherwise shown.

Illinois Department of Transportation

APPROVED January 1, 2008
ENGINEER OF OPERATIONS

APPROVED January 1, 2008
ENGINEER OF DESIGN AND ENVIRONMENT

ISSUED 1-1-97

LANE CLOSURE, 2L, 2W, BRIDGE REPAIR, FOR SPEEDS > 45 MPH

(Sheet 2 of 2)

STANDARD 701316-04

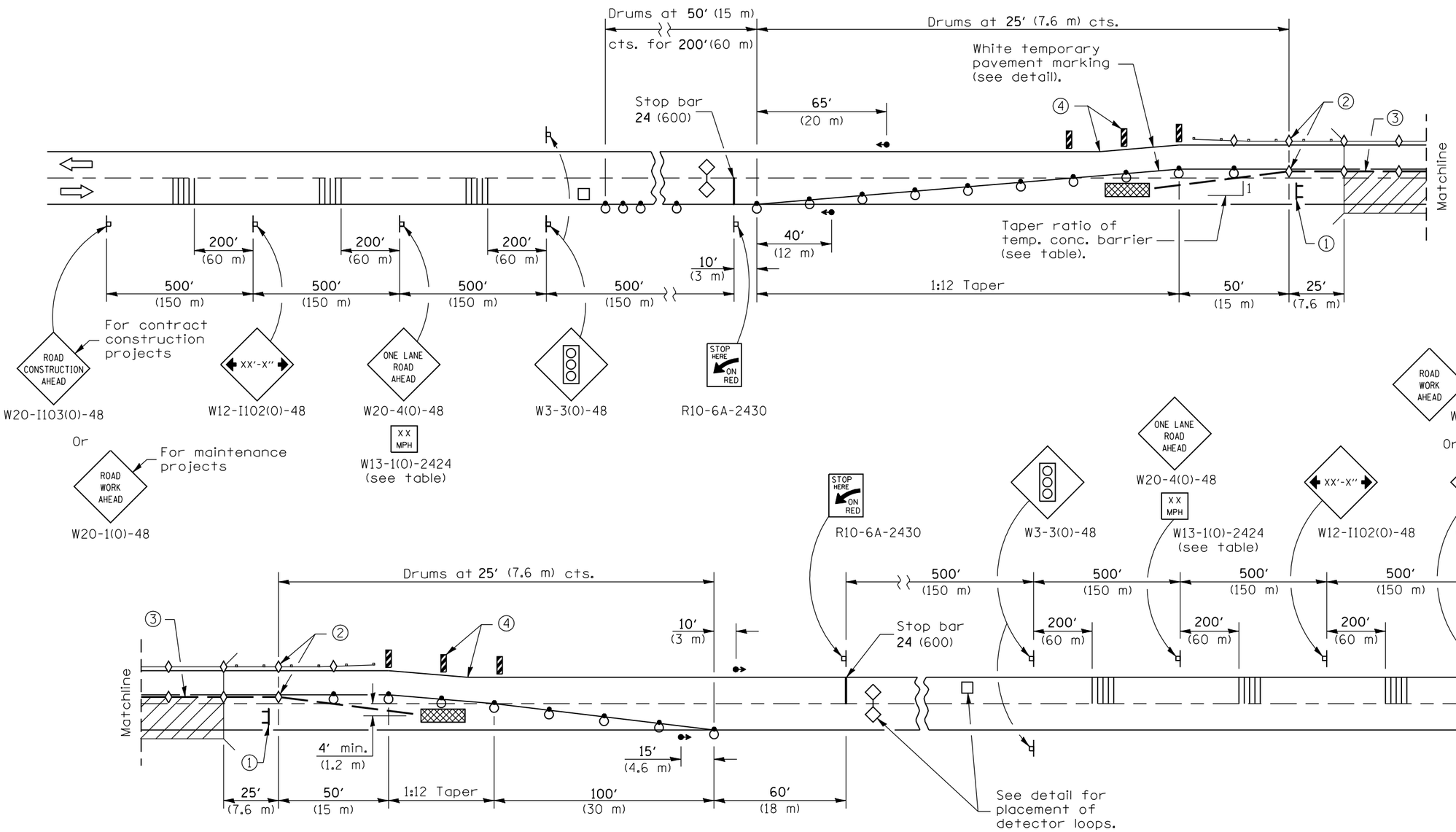

① Type III barricade to be placed when no work is being performed.

② Barrier wall/guardrail markers at 25′ (7.6 m) cts. See Standards 704001 & 635011.

③ When temp. bridge rail is specified, it shall be connected to the temp. conc. barrier using a traffic barrier terminal Type 11.

④ These vertical panels at 25′ (7.6 m) cts. may be omitted when the guardrail, w/markers, extends to at least this point on the taper.

SYMBOLS

- Work area
- Sign
- Type III barricade
- Traffic signal
- Detector loops
- Impact attenuator
- Drum with steady burning light
- Temporary concrete barrier
- Temporary rumble strip (when specified)
- Double vertical panel (see detail)
- Crystal, bidirectional barrier wall/guardrail marker

See Sheet 2 for GENERAL NOTES

Illinois Department of Transportation

APPROVED January 1, 2009
ENGINEER OF OPERATIONS
APPROVED January 1, 2009
ENGINEER OF DESIGN AND ENVIRONMENT

ISSUED 1-1-97

DATE	REVISIONS
1-1-09	Switched units to
	English (metric).
	Corrected sign No.'s.
1-1-08	Completely revised
	Standard.

LANE CLOSURE, 2L, 2W, BRIDGE REPAIR WITH BARRIER

(Sheet 1 of 2)

STANDARD 701321-10

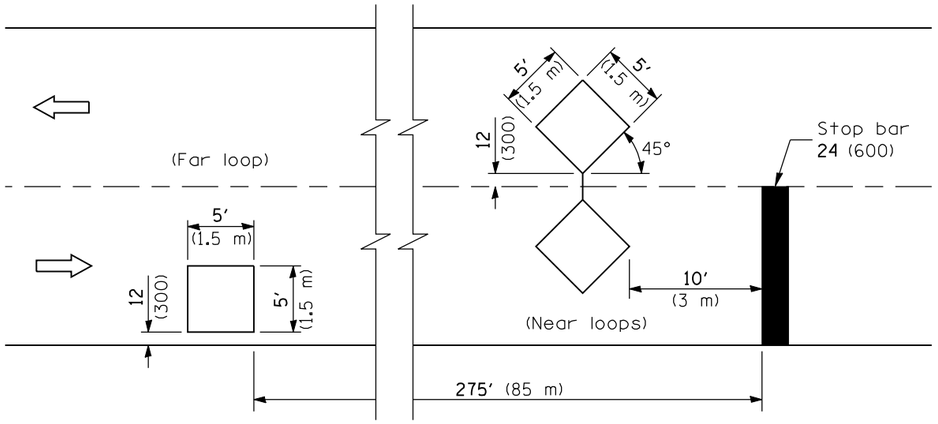

DETECTOR LOOPS

TRAFFIC SIGNAL SEQUENCE						
PHASE	A			B		
INTERVAL	1	2	3	4	5	6
NORTHBOUND OR EASTBOUND	G	Y	R	R	R	R
SOUTHBOUND OR WESTBOUND	R	R	R	G	Y	R

TEMPORARY CONCRETE BARRIER	
NORMAL POSTED SPEED	TAPER RATIO
40 mph AND ABOVE	12:1
BELOW 40 mph	8:1

ADVISORY SPEED LIMIT	
NORMAL POSTED SPEED	ADVISORY SPEED
55 - 45 mph	40 mph
40 mph	35 mph
35 - 30 mph	30 mph

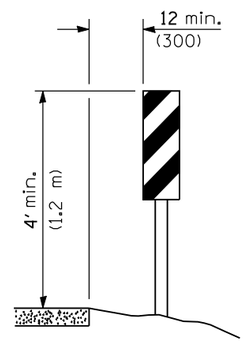

VERTICAL PANELS

(Post mounted, one each side)

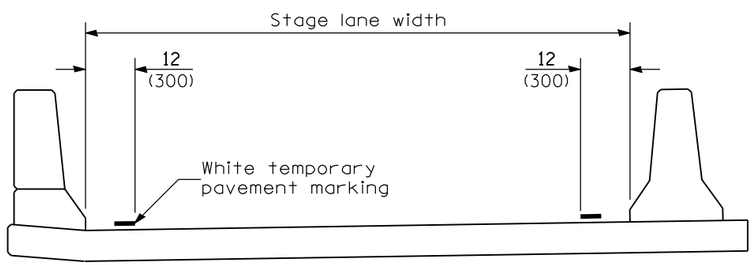

TEMPORARY PAVEMENT MARKING

GENERAL NOTES

This Standard is used where, at any time, any vehicle, equipment, workers, or their activities will encroach on one lane of a bridge. Traffic signals and a positive barrier are required.

Traffic signals shall be operational only when all traffic controls are in place. When traffic signals are not in operation, flaggers shall be used and traffic control shall conform to Standard 701201 or 701206.

Temporary concrete barrier shall be according to Standard 704001.

All dimensions are in inches (millimeters) unless otherwise shown.

Illinois Department of Transportation

APPROVED January 1, 2008
ENGINEER OF OPERATIONS

APPROVED January 1, 2008
ENGINEER OF DESIGN AND ENVIRONMENT

ISSUED 1-1-97

LANE CLOSURE, 2L, 2W, BRIDGE REPAIR WITH BARRIER

(Sheet 2 of 2)

STANDARD 701321-10

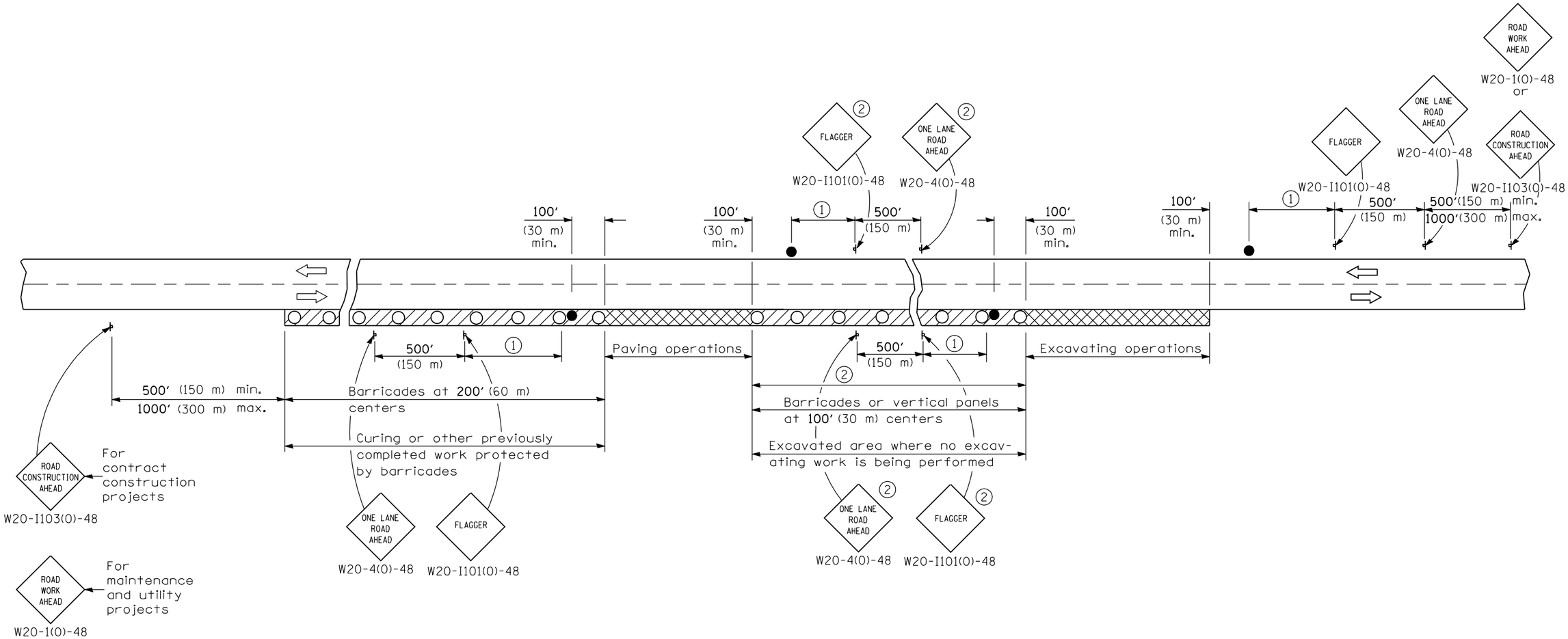

SYMBOLS

- Work area
- Active Work area
- Sign
- Barricade, drum, or vertical panels
- Flagger with traffic control sign

(1) Minimum distance is 200′ (60 m). Maximum distance to be determined by the Engineer but in no case to exceed the length of ½ day's normal operation or 2 miles (3200 m) whichever is less.

(2) Signs are not required if distance between work operations is less than 2000′ (600 m) unless restricted sight distance exists.

GENERAL NOTES

This Standard is used where at any time, any vehicle, equipment, workers or their activities will encroach on the pavement during widening operations.

Two flaggers are required for each separate operation.

All dimensions are in inches (millimeters) unless otherwise shown.

Illinois Department of Transportation

APPROVED January 1, 2009
ENGINEER OF OPERATIONS

APPROVED January 1, 2009
ENGINEER OF DESIGN AND ENVIRONMENT

ISSUED 1-1-97

DATE	REVISIONS
1-1-09	Switched units to
	English (metric).
	Corrected sign No.'s.
1-1-05	Moved flaggers off
	roadway and deleted
	FLAGGER SYMBOL sign.

LANE CLOSURE, 2L, 2W, PAVEMENT WIDENING, FOR SPEEDS ≥ 45 MPH

STANDARD 701326-03

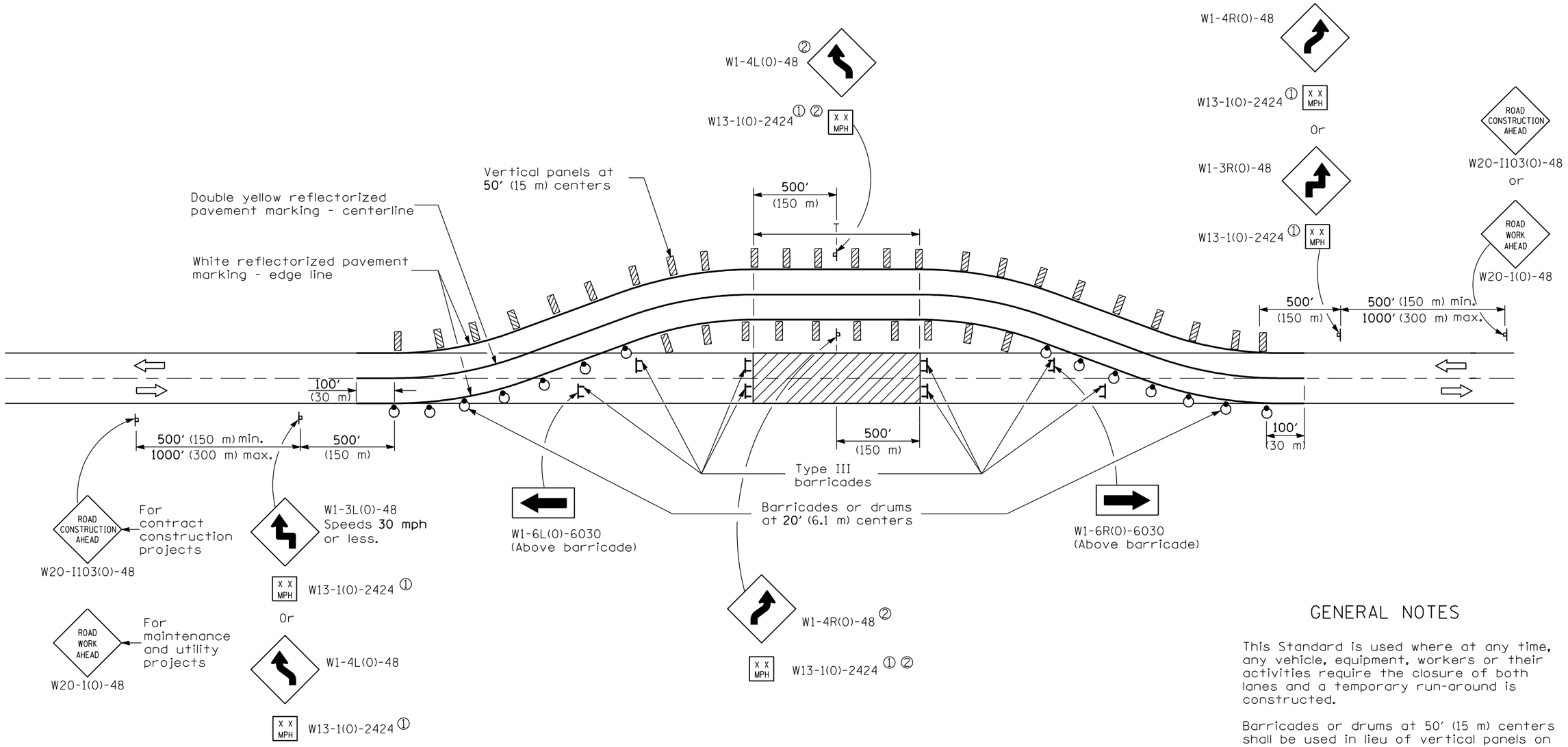

TYPICAL APPLICATIONS

Bridge construction

Culvert construction

SYMBOLS

- Work area
- Sign
- Barricade or drum with monodirectional steady burning light
- Vertical panel
- Type III barricade

① The advisory speed to be shown below the reverse curve (turn) signs shall be determined at the site and approved by the Engineer.

② These signs are not required when T is less than 500′ (150 m).

GENERAL NOTES

This Standard is used where at any time, any vehicle, equipment, workers or their activities require the closure of both lanes and a temporary run-around is constructed.

Barricades or drums at 50′ (15 m) centers shall be used in lieu of vertical panels on the detour where they are to be placed on new or existing pavement.

Where the tangent distance on the temporary run-around exceeds 600′ (180 m), crystal delineators at 50′ (15 m) centers may be substituted for the vertical panels, or the spacing between vertical panels may be increased to 100′ (30 m) within the limits of the tangent.

All dimensions are in inches (millimeters) unless otherwise shown.

Illinois Department of Transportation

APPROVED January 1, 2009
ENGINEER OF OPERATIONS

APPROVED January 1, 2009
ENGINEER OF DESIGN AND ENVIRONMENT

ISSUED 1-1-97

DATE	REVISIONS
1-1-09	Switched units to
	English (metric).
	Corrected sign No.'s.
1-1-05	Deleted DETOUR AHEAD
	sign.

LANE CLOSURE, 2L, 2W, WITH RUN-AROUND, FOR SPEEDS ≥ 45 MPH

STANDARD 701331-03

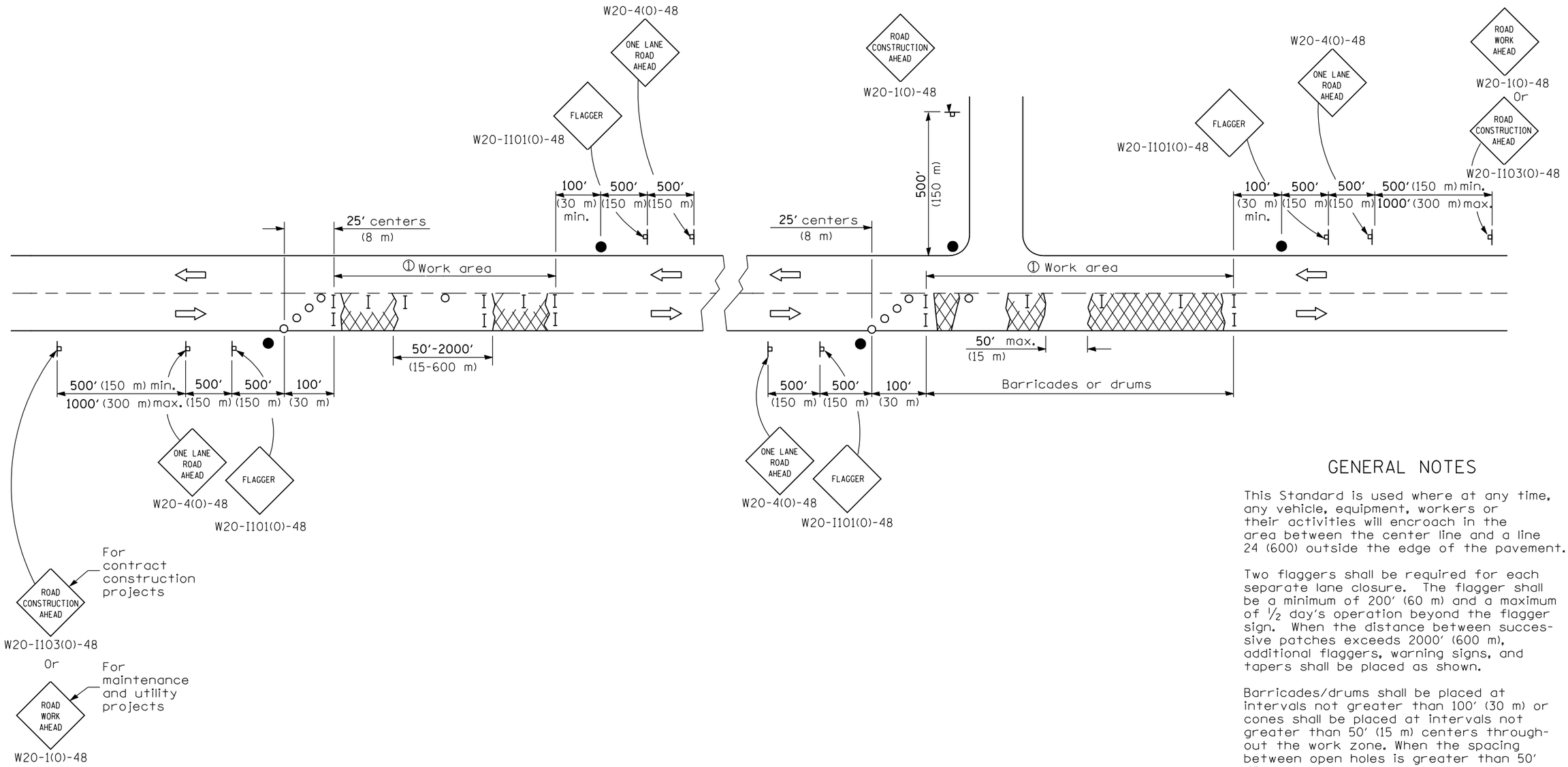

① ½ mile (800 m) maximum

TYPICAL APPLICATIONS

Patching

SYMBOLS

- Patches
- Sign
- Flagger with traffic control sign
- Barricade or drum
- Cone, barricade or drum

GENERAL NOTES

This Standard is used where at any time, any vehicle, equipment, workers or their activities will encroach in the area between the center line and a line 24 (600) outside the edge of the pavement.

Two flaggers shall be required for each separate lane closure. The flagger shall be a minimum of 200′ (60 m) and a maximum of ½ day's operation beyond the flagger sign. When the distance between successive patches exceeds 2000′ (600 m), additional flaggers, warning signs, and tapers shall be placed as shown.

Barricades/drums shall be placed at intervals not greater than 100′ (30 m) or cones shall be placed at intervals not greater than 50′ (15 m) centers throughout the work zone. When the spacing between open holes is greater than 50′ (15 m), two barricades/drums shall be placed in front of each open hole and one on the backside close to the centerline. When the open hole is greater than 10′ (3 m) parallel to the centerline, one barricade/drum shall be placed in each hole. For large holes, barricades/drums shall be placed at 50′ (16 m) centers.

All dimensions are in inches (millimeters) unless otherwise shown.

Illinois Department of Transportation

APPROVED January 1, 2009
ENGINEER OF OPERATIONS

APPROVED January 1, 2009
ENGINEER OF DESIGN AND ENVIRONMENT

ISSUED 1-1-97

DATE	REVISIONS
1-1-09	Switched units to
	English (metric).
	Corrected sign No.'s.
1-1-05	Deleted FLAGGER SYMBOL
	sign and revised sign
	spacing.

LANE CLOSURE, 2L, 2W, WORK AREAS IN SERIES, FOR SPEEDS ≥ 45 MPH

STANDARD 701336-05

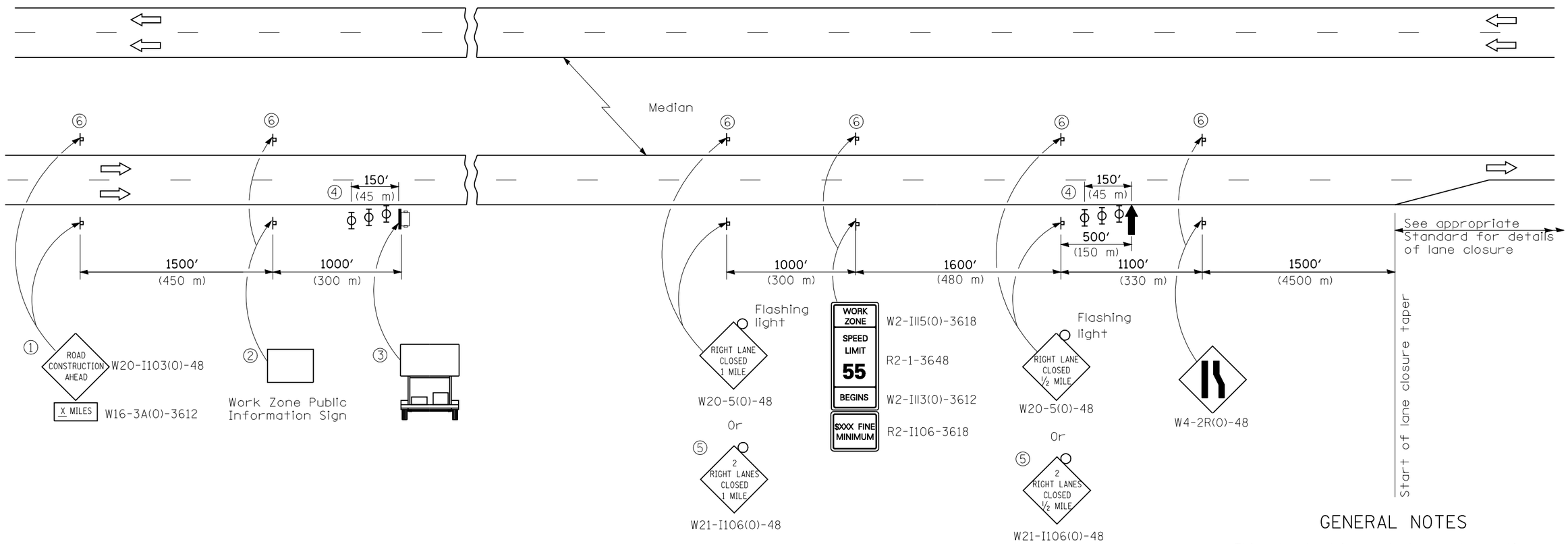

SYMBOLS

- Arrow board
- Portable changeable message sign
- Sign
- Type II barricade, drum, or vertical barricade with monodirectional flashing light

① The Road Construction Ahead sign shall be located 3 to 5 miles in advance of the project limits.

② The message and size of the Work Zone Public Information Sign shall be as specified by the Department.

③ The message board shall be used to display status of lanes within the project. The primary messages shall be:
"Right Lane Closed" / " x Miles Ahead"
"Left Lane Closed" / " x Miles Ahead"
"All Lanes Open"

④ Three, Type II barricades, drums, or vertical barricades at 50′ (15 m) centers.

⑤ This sign shall be used when 2 lanes are closed.

⑥ This sign shall be omitted when median width is less than 10′ (3 m).

GENERAL NOTES

This standard is used where at any time a lane is closed on a freeway/expressway. When the left lane is closed, LEFT LANE CLOSED signs shall be substituted for the RIGHT LANE CLOSED signs.

The first two signs and the message board are stationary.

The last four signs and arrowboard shall be moved as necessary to maintain the required distance from the start of the lane closure taper(s).

All dimensions are in inches (millimeters) unless otherwise shown.

Illinois Department of Transportation

APPROVED January 1, 2010
ENGINEER OF SAFETY ENGINEERING

APPROVED January 1, 2010
ENGINEER OF DESIGN AND ENVIRONMENT

ISSUED 4-1-04

DATE	REVISIONS
1-1-10	Added note ⑥. Now
	approved by ENGINEER
	OF SAFETY ENGINEERING.
1-1-09	Switched units to
	English (metric).
	Corrected sign No.

APPROACH TO LANE CLOSURE, FREEWAY/EXPRESSWAY

STANDARD 701400-04

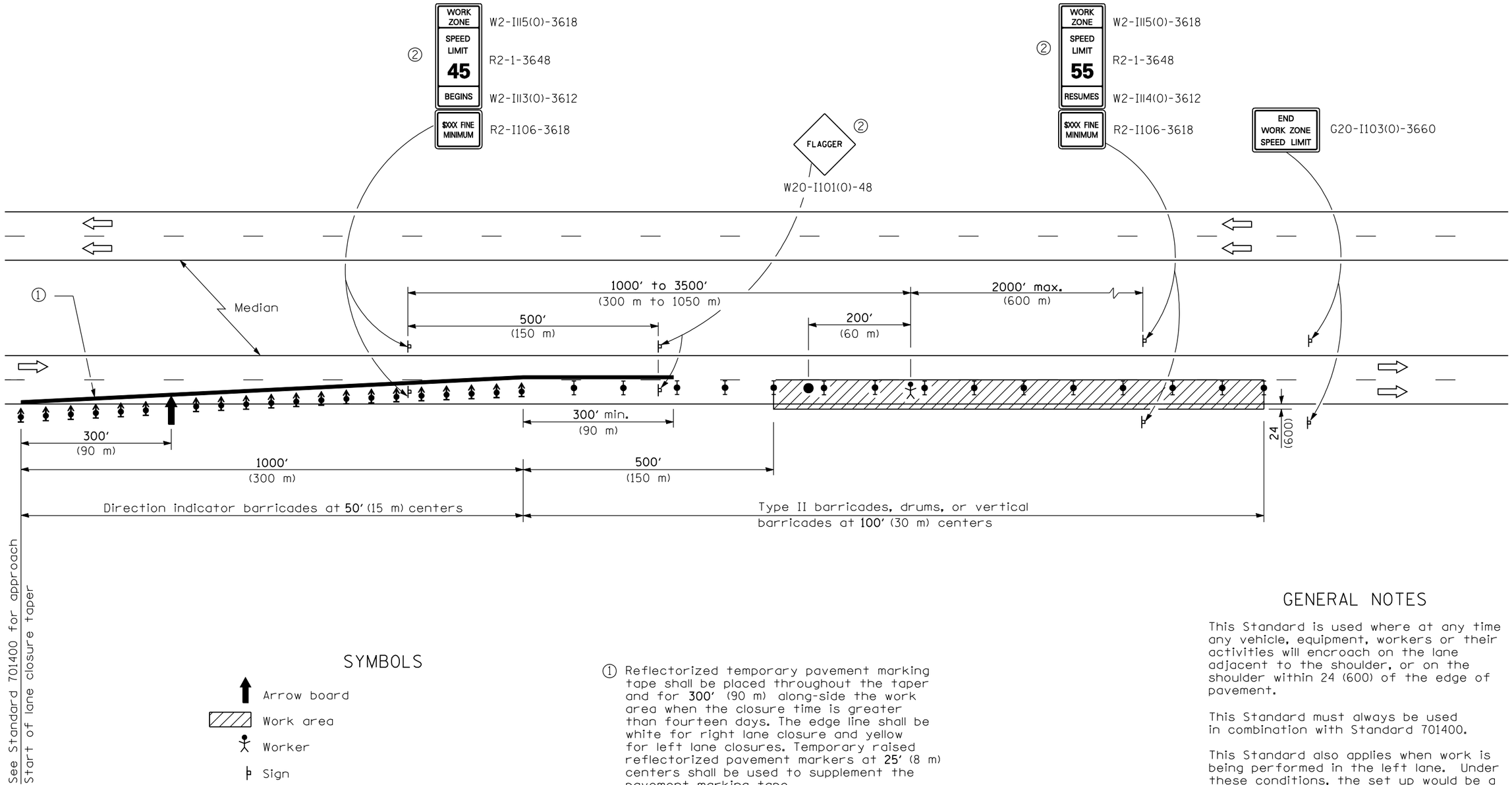

SYMBOLS

- Arrow board
- Work area
- Worker
- Sign
- Direction indicator barricade with steady burn monodirectional light
- Type II barricade, drum, or vertical barricade with steady burn monodirectional light
- Flagger with traffic control sign

① Reflectorized temporary pavement marking tape shall be placed throughout the taper and for 300′ (90 m) along-side the work area when the closure time is greater than fourteen days. The edge line shall be white for right lane closure and yellow for left lane closures. Temporary raised reflectorized pavement markers at 25′ (8 m) centers shall be used to supplement the pavement marking tape.

② Work Zone speed limit signs and FLAGGER signs shall be moved as necessary to maintain the required spacing between the signs and the workers in each separate work activity.

GENERAL NOTES

This Standard is used where at any time any vehicle, equipment, workers or their activities will encroach on the lane adjacent to the shoulder, or on the shoulder within 24 (600) of the edge of pavement.

This Standard must always be used in combination with Standard 701400.

This Standard also applies when work is being performed in the left lane. Under these conditions, the set up would be a mirror image to what is shown.

A check barricade shall be placed in the middle of the closed lane and at the shoulder at 1000′ (300 m) centers.

All dimensions are in inches (millimeters) unless otherwise shown.

Illinois Department of Transportation

APPROVED January 1, 2009
ENGINEER OF OPERATIONS

APPROVED January 1, 2009
ENGINEER OF DESIGN AND ENVIRONMENT

ISSUED 1-1-97

DATE	REVISIONS
1-1-09	Switched units to English (metric).
1-1-08	Changed max. distance to worker.

LANE CLOSURE, FREEWAY/EXPRESSWAY

STANDARD 701401-05

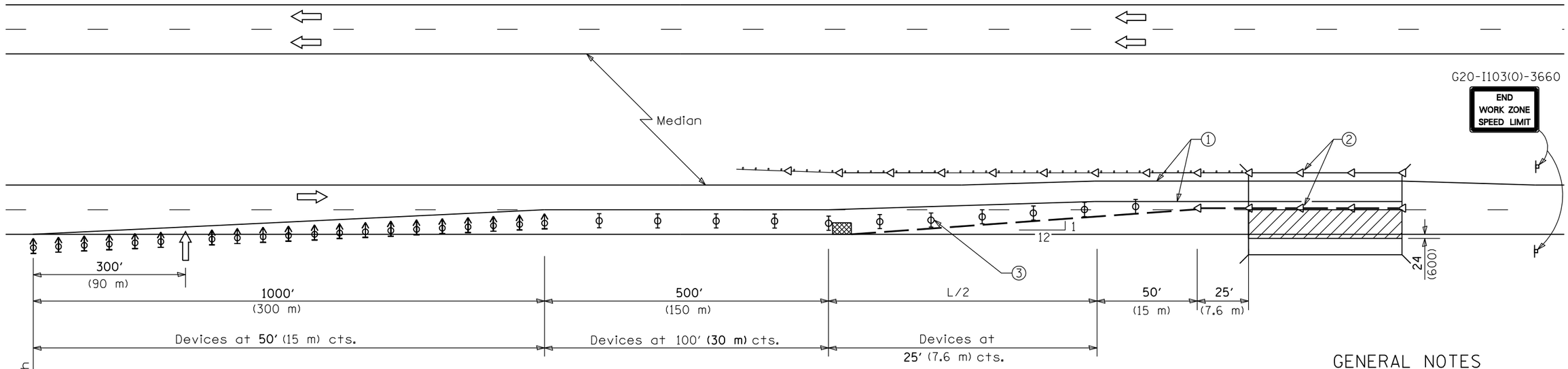

See Standard 701400 for approach
Start of lane closure taper

SYMBOLS

- Arrow board
- Work area
- Sign
- Direction indicator barricade with steady burn monodirectional light
- Type II barricade, drum, or vertical barricade with steady burn monodirectional light
- Temporary concrete barrier
- Monodirectional barrier wall/guardrail marker
- Impact attenuator

① Temporary pavement marking tape shall be placed throughout the taper and along-side the work area. The right edge line shall be white and the left edge line shall be yellow.

② Barrier wall/guardrail markers at 25′ (7.6 m). Markers on right shall be shall be crystal and markers on left shall be amber.

③ Vertical barricades shall not be used in lane shift taper.

GENERAL NOTES

This standard is used where at any time any vehicle, equipment, workers or their activities will encroach on the pavement or on the shoulder within 24 (600) of the edge of pavement for day light operation exceeding one day and where temporary concrete barrier is utilized.

This Standard must always be used in combination with Standard 701400.

When work is being performed in the left lane, the set up would be a mirror image to what is shown.

Temporary concrete barrier shall be according to Standard 704001.

Calculate L as follows:

NORMAL POSTED SPEED	FORMULAS English	FORMULAS Metric
45 mph or more	L = WS	L = 0.65WS

W = Width of offset in feet (meters).

S = Normal posted speed in mph.

All dimensions are in inches (millimeters) unless otherwise shown.

Illinois Department of Transportation

APPROVED January 1, 2009
ENGINEER OF OPERATIONS

APPROVED January 1, 2009
ENGINEER OF DESIGN AND ENVIRONMENT

ISSUED 1-1-09

DATE	REVISIONS
1-1-09	Switched units to English (metric), Barr.'s to Type II in lane shift.
1-1-08	Added lane shift at work area. Omitted vertical panels.

LANE CLOSURE, FREEWAY/EXPRESSWAY, WITH BARRIER

STANDARD 701402-07

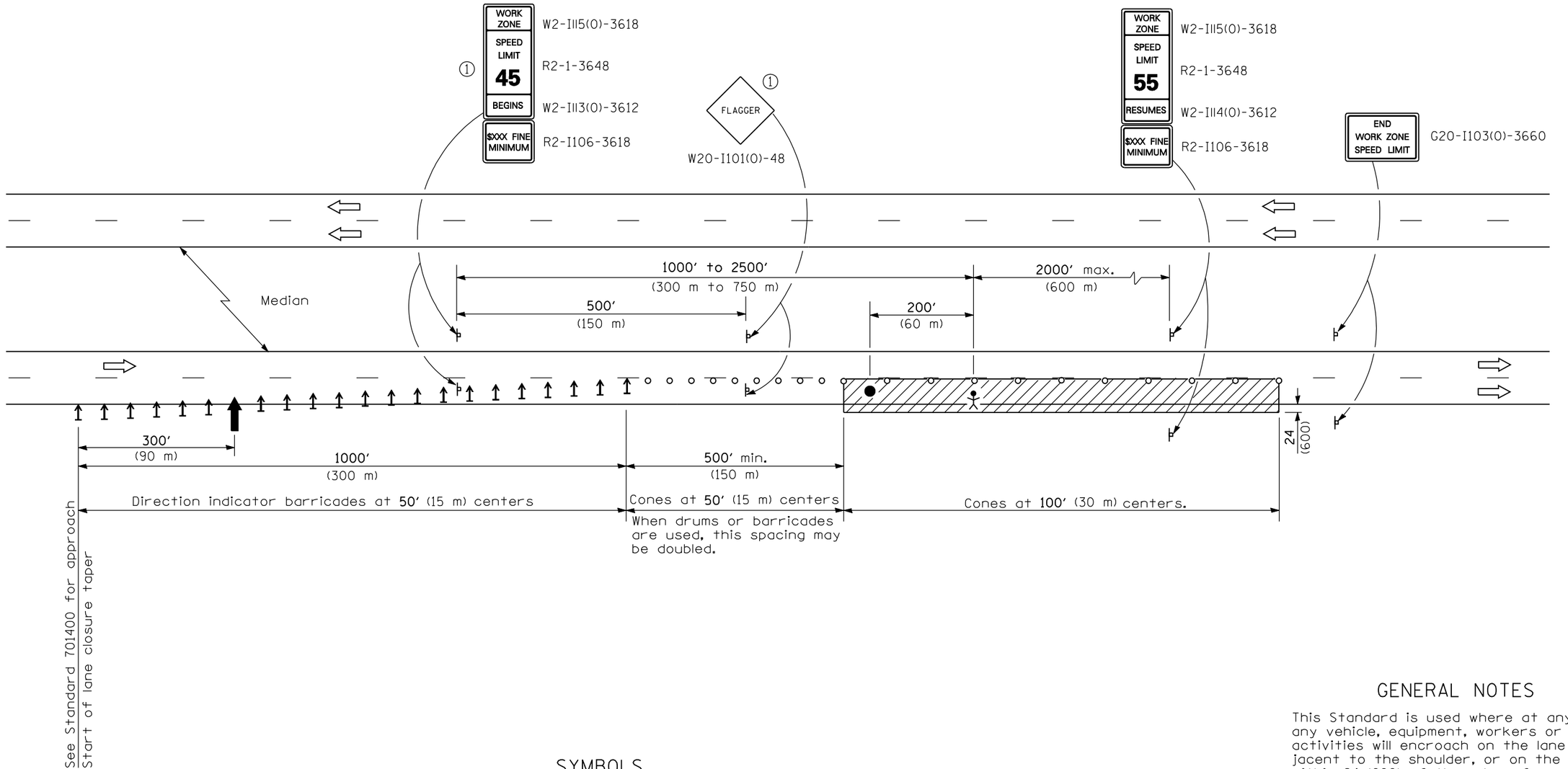

TYPICAL APPLICATIONS

Pavement patch

Utility operations

Bituminous resurfacing

SYMBOLS

- Arrow board
- Work area
- Worker
- Sign
- Direction indicator barricade
- Cone, drum or barricade
- Flagger with traffic control sign

① Work zone speed limit signs and FLAGGER signs shall be moved as necessary to maintain the required spacing between the signs and the workers in each separate work activity.

GENERAL NOTES

This Standard is used where at any time, any vehicle, equipment, workers or their activities will encroach on the lane adjacent to the shoulder, or on the shoulder within 24 (600) of the edge of pavement for day light operation.

This Standard must always be used in combination with Standard 701400.

This Standard also applies when work is being performed in the left lane. Under these conditions, the set up would be a mirror image to what is shown.

All dimensions are in inches (millimeters) unless otherwise shown.

Illinois Department of Transportation

APPROVED January 1, 2009
ENGINEER OF OPERATIONS

APPROVED January 1, 2009
ENGINEER OF DESIGN AND ENVIRONMENT

ISSUED 1-1-97

DATE	REVISIONS
1-1-09	Switched units to
	English (metric).
4-15-04	Revised signs.

LANE CLOSURE, FREEWAY/EXPRESSWAY, DAY OPERATIONS ONLY

STANDARD 701406-05

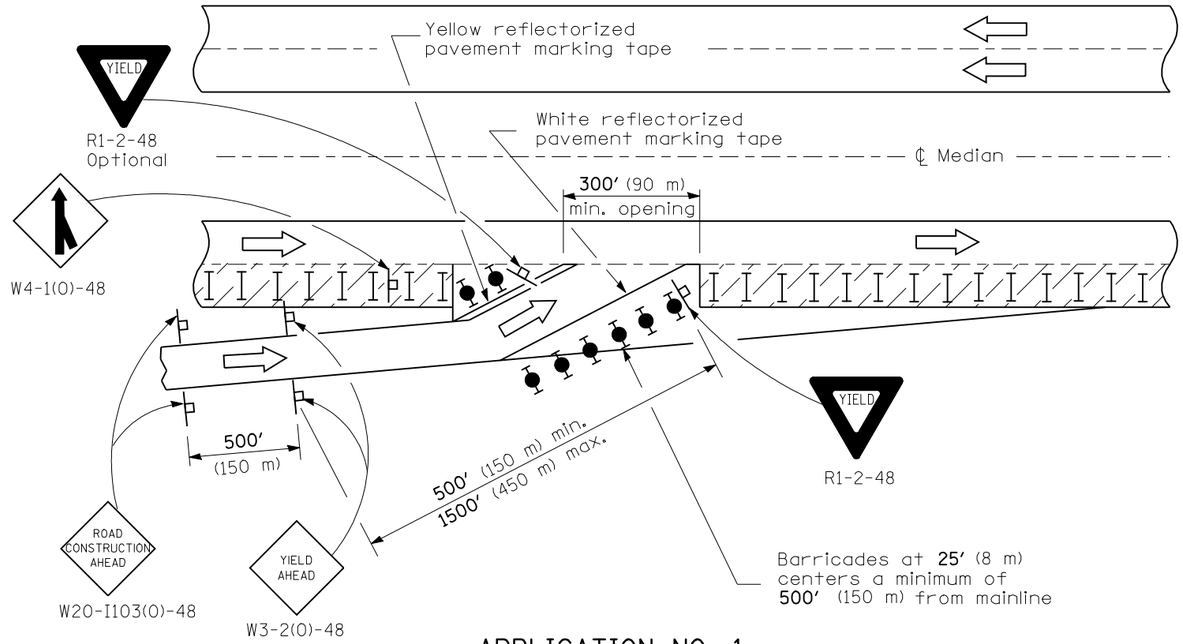

APPLICATION NO. 1

Application No. 1 depicts a modified entrance ramp. This method shall be utilized whenever existing entrance tapers cannot be retained due to the close proximity of the work zone. The entrance location may be shifted, with the approval of the Engineer, to perform work in the entrance area. Application No. 2 shall be put into effect as soon as possible.

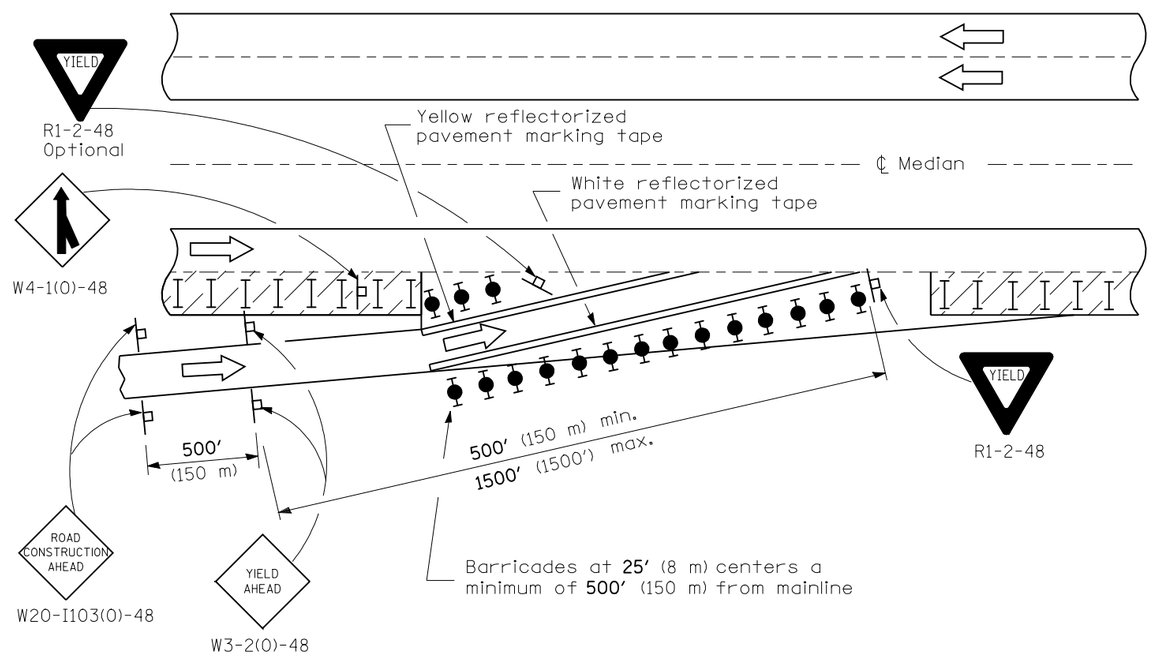

APPLICATION NO. 2

Application No. 2 depicts a shortening of the normal entrance ramp. This method shall be used whenever the existing geometrics can be retained. Consideration should be given to the entering motorists' line of sight, through, between, or over the delineation devices.

SYMBOLS

- Work area
- Sign
- Type II barricades or drums with steady burning monodirectional light
- Type II barricades or drums
- Drums with steady burning monodirectional light

GENERAL NOTES

This Standard is used where, at any time any vehicle, equipment, workers or their activities require a lane closure in close proximity of an exit or entrance ramp and supplements other traffic control Standards for lane closures.

These applications also apply when work is being performed in the left lanes and the ramps enter and exit on the left. Under these conditions, the Exit sign arrow and the Side road symbol sign shall be changed.

Cones may be utilized during daylight operations, at one half the spacing or drums/barricades.

Use of these cases limited to 5 days per location.

When work does not exceed 3 days, pavement marking tape may be omitted.

All dimensions are in inches (millimeters) unless otherwise shown.

Illinois Department of Transportation

APPROVED January 1, 2010
ENGINEER OF SAFETY ENGINEERING
APPROVED January 1, 2010
ENGINEER OF DESIGN AND ENVIRONMENT

ISSUED 1-1-97

DATE	REVISIONS
1-1-10	Revised General Notes,
	approval now by ENGINEER
	OF SAFETY ENGINEERING.
1-1-09	Switched units to
	English (metric).
	Corrected sign No.'s.

LANE CLOSURE, MULTILANE, AT ENTRANCE OR EXIT RAMP, FOR SPEEDS ≥ 45 MPH

(Sheet 1 of 2)

STANDARD 701411-06

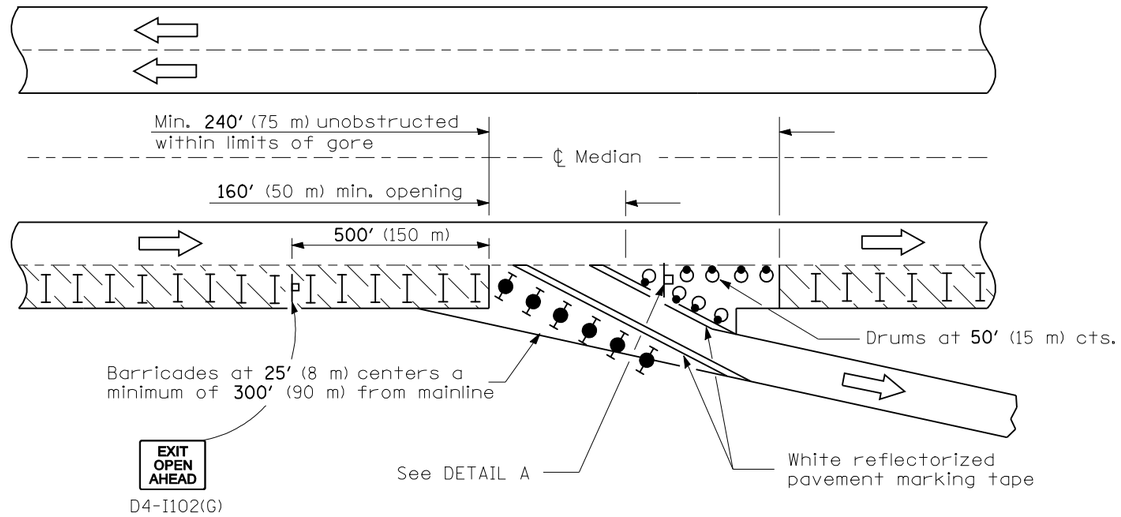

APPLICATION NO. 3

Application No. 3 depicts a modified exit ramp. The channelizing devices shall provide a clearly defined path for the exiting motorists. The minimum dimensions shown shall be increased as soon as the progress of the work will permit. The open portion of the ramp may be shifted, with the approval of the Engineer, to perform work in stages on the area adjacent to the ramp exit. Application No. 4 shall be put into effect as soon as possible.

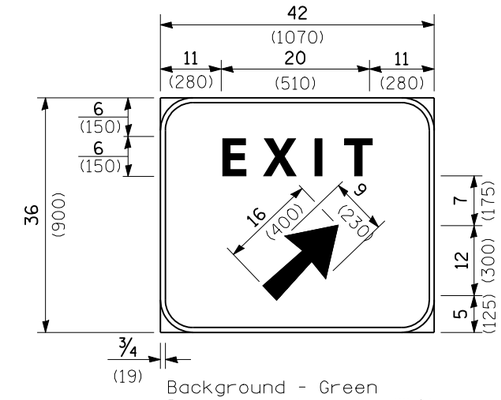

EXIT SIGN - SPECIAL

DETAIL A

(To be utilized where distance between the two rows of channelizing devices is 6′ (1.8 m) in width.)

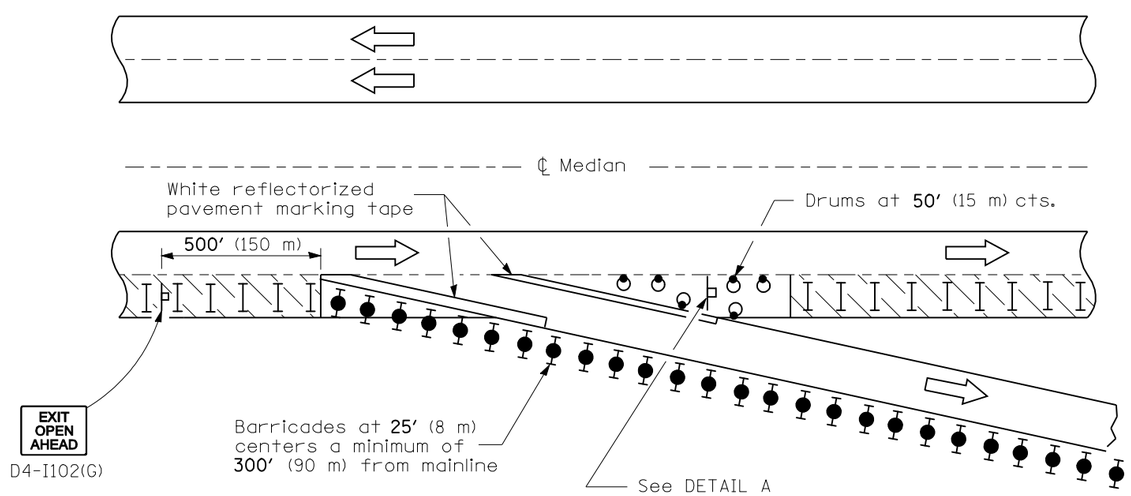

APPLICATION NO. 4

Application No. 4 depicts an extension of the normal exit ramp. This method shall be used whenever existing geometrics can be retained. Consideration should be given to the exiting motorist's line of sight through, between or over the delineation devices.

Illinois Department of Transportation

APPROVED January 1, 2010
ENGINEER OF SAFETY ENGINEERING

APPROVED January 1, 2010
ENGINEER OF DESIGN AND ENVIRONMENT

ISSUED 1-1-97

LANE CLOSURE, MULTILANE, AT ENTRANCE OR EXIT RAMP, FOR SPEEDS ≥ 45 MPH

(Sheet 2 of 2)

STANDARD 701411-06

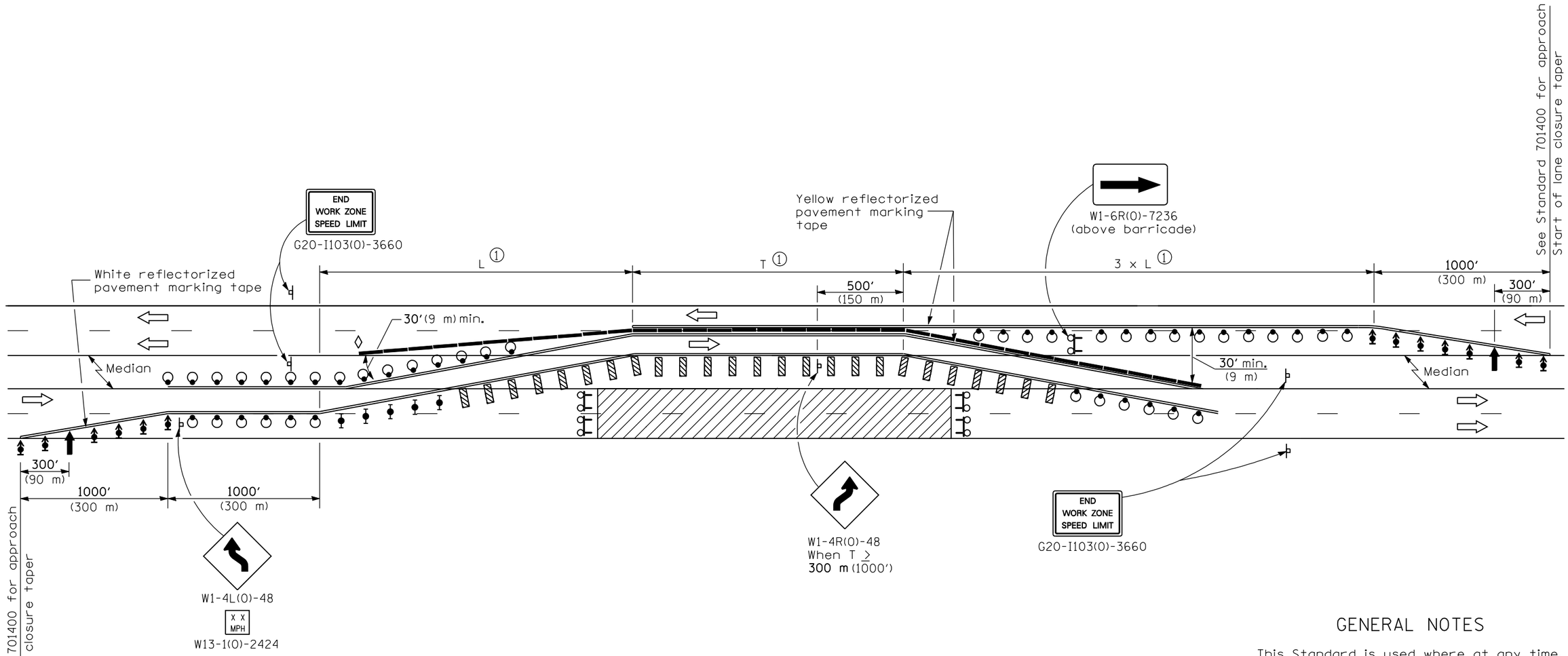

SYMBOLS

- Arrow board
- Work area
- Sign
- Direction indicator barricade with steady burn monodirectional light
- Type II barricade with steady burn monodirectional light
- Drum with steady burn monodirectional light
- Vertical Panel (back to back)
- Type III barricade with flashing lights
- Temporary concrete barrier
- Bidirectional barrier marker

① "L" and "T" shall be as shown on the plan details.

GENERAL NOTES

This Standard is used where at any time, any vehicle, equipment, workers or their activities require the closure of two adjacent lanes and a temporary crossover is provided by making use of one lane of pavement normally used by opposing flow of traffic and concrete barrier is used to separate the opposing traffic.

This Standard must always be used in combination with Standard 701400.

All barricades, drums, and vertical panels shall be at 50 ft. (15 m) centers.

Temporay concrete barrier shall be according to Standard 704001.

All dimensions are in inches (millimeters) unless otherwise shown.

Illinois Department of Transportation

APPROVED January 1, 2009
ENGINEER OF OPERATIONS

APPROVED January 1, 2009
ENGINEER OF DESIGN AND ENVIRONMENT

ISSUED 1-1-97

DATE	REVISIONS
1-1-09	Switched units to English (metric), Barr.'s to type II in lane shift.
4-15-04	Revised signs.

LANE CLOSURE, FREEWAY/EXPRESSWAY, WITH CROSSOVER AND BARRIER

STANDARD 701416-06

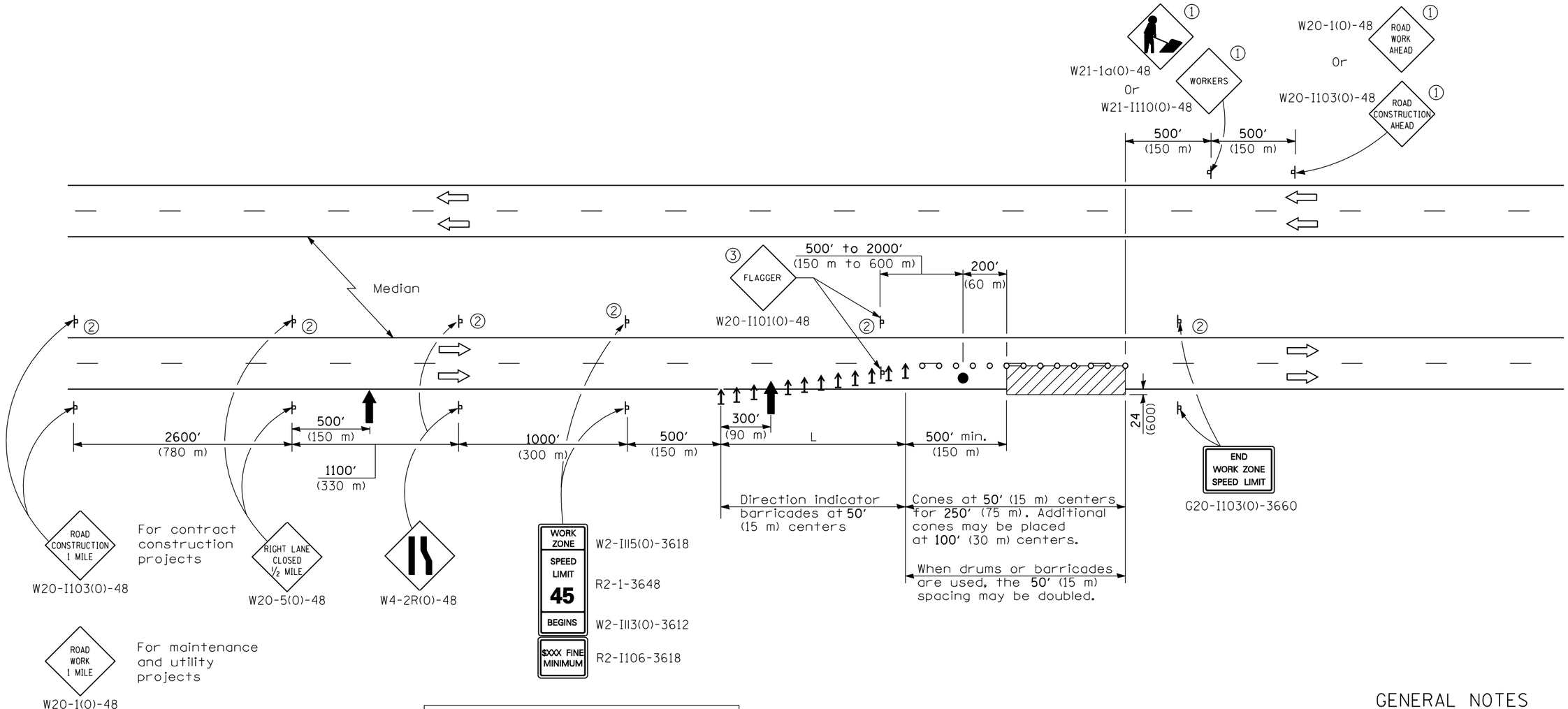

L = lane width X taper ratio	
Normal Posted Speed	Taper Ratio
mph	
55	55/1
45	45/1

① Undivided roadway only with left lane closure in opposite direction.

② Omitted when median is less 10′ (3 m).

③ FLAGGER signs shall be moved as necessary to maintain the required spacing between the sign and each separate work activity.

TYPICAL APPLICATIONS

Pavement patch

Utility operations

Bituminous resurfacing

SYMBOLS

Arrow board

Work area

Sign

Direction indicator barricade

Cone, drum or barricade

Flagger with traffic control sign

GENERAL NOTES

This Standard is used where at any time, any vehicle, equipment, workers or their activities will encroach on the lane adjacent to the shoulder, or on the shoulder within 24 (600) of the edge of pavement.

This Standard also applies when work is being performed in the left lane. Under these conditions, LEFT LANE CLOSED signs shall be substituted for RIGHT LANE CLOSED signs. On undivided highways, signs shall be added in the opposite direction as shown.

All dimensions are in inches (millimeters) unless otherwise shown.

Illinois Department of Transportation

APPROVED January 1, 2009
ENGINEER OF OPERATIONS

APPROVED January 1, 2009
ENGINEER OF DESIGN AND ENVIRONMENT

ISSUED 4-1-04

DATE	REVISIONS
1-1-09	Switched units to
	English (metric).
	Corrected sign No.'s.
4-15-04	Revised signs.

LANE CLOSURE, MULTILANE, DAY OPERATIONS ONLY, FOR SPEEDS ≥ 45 MPH TO 55 MPH

STANDARD 701421-02

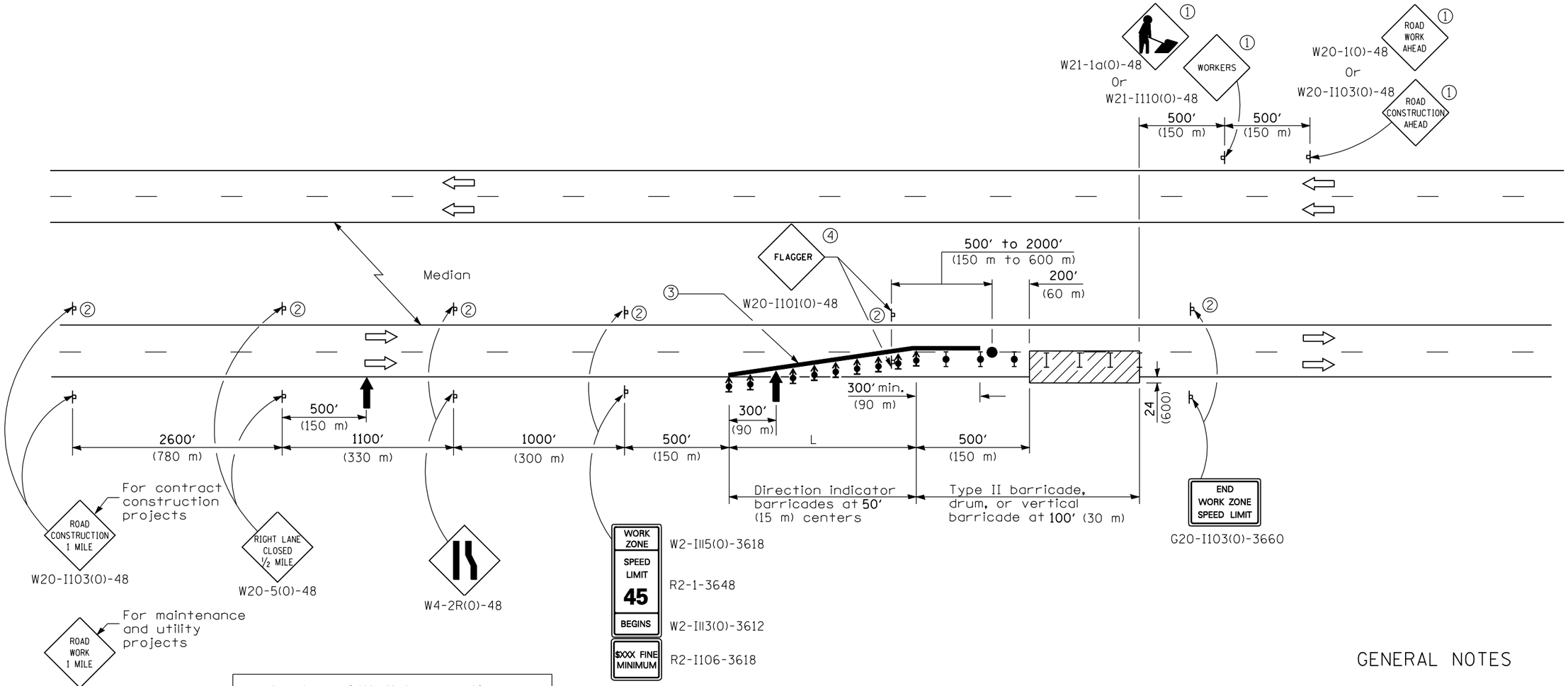

L = lane width X taper ratio	
Normal Posted Speed	Taper Ratio
mph	
55	55/1
45	45/1

SYMBOLS

- Arrow board
- Work area
- Sign
- Direction indicator barricade with steady burn monodirectional light
- Type II barricade, drum, or vertical barricade
- Type II barricade, drum, or vertical barricade with steady burn monodirectional light
- Flagger with traffic control sign

① Undivided roadway only with left lane closure in opposite direction.

② Omitted when median is less than 10′ (3 m).

③ Reflectorized temporary pavement marking tape shall be placed throughout the taper and for 300′ (90 m) along-side the work area where the closure time is greater than fourteen days. The edge line shall be white for right lane closures and yellow for left lane closures. Raised reflectorized pavement markers at 25′ (8 m) centers shall be used to supplement the pavement marking tape.

④ FLAGGER signs shall be moved as necessary to maintain the required spacing between the sign and each separate work activity.

GENERAL NOTES

This standard is used where at any time any vehicle, equipment, workers or their activities will encroach on the lane adjacent to the shoulder, or on the shoulder within 24 (600) of the edge of pavement for day light operation exceeding one day.

This standard also applies when work is being performed in the left lane. Under these conditions LEFT LANE CLOSED signs shall be substituted for RIGHT LANE CLOSED signs. On undivided highways. signs shall be added in the opposite direction as shown.

A check barricades shall be placed in the middle of the closed lane and at the shoulder at 1000′ (300m) centers.

All dimensions are in inches (millimeters) unless otherwise shown.

Illinois Department of Transportation

APPROVED January 1, 2009
ENGINEER OF OPERATIONS

APPROVED January 1, 2009
ENGINEER OF DESIGN AND ENVIRONMENT

ISSUED 4-1-04

DATE	REVISIONS
1-1-09	Switched units to
	English (metric).
	Corrected sign No.'s.
4-15-04	Revised signs.

LANE CLOSURE, MULTILANE, FOR SPEEDS ≥ 45 MPH TO 55 MPH

STANDARD 701422-02

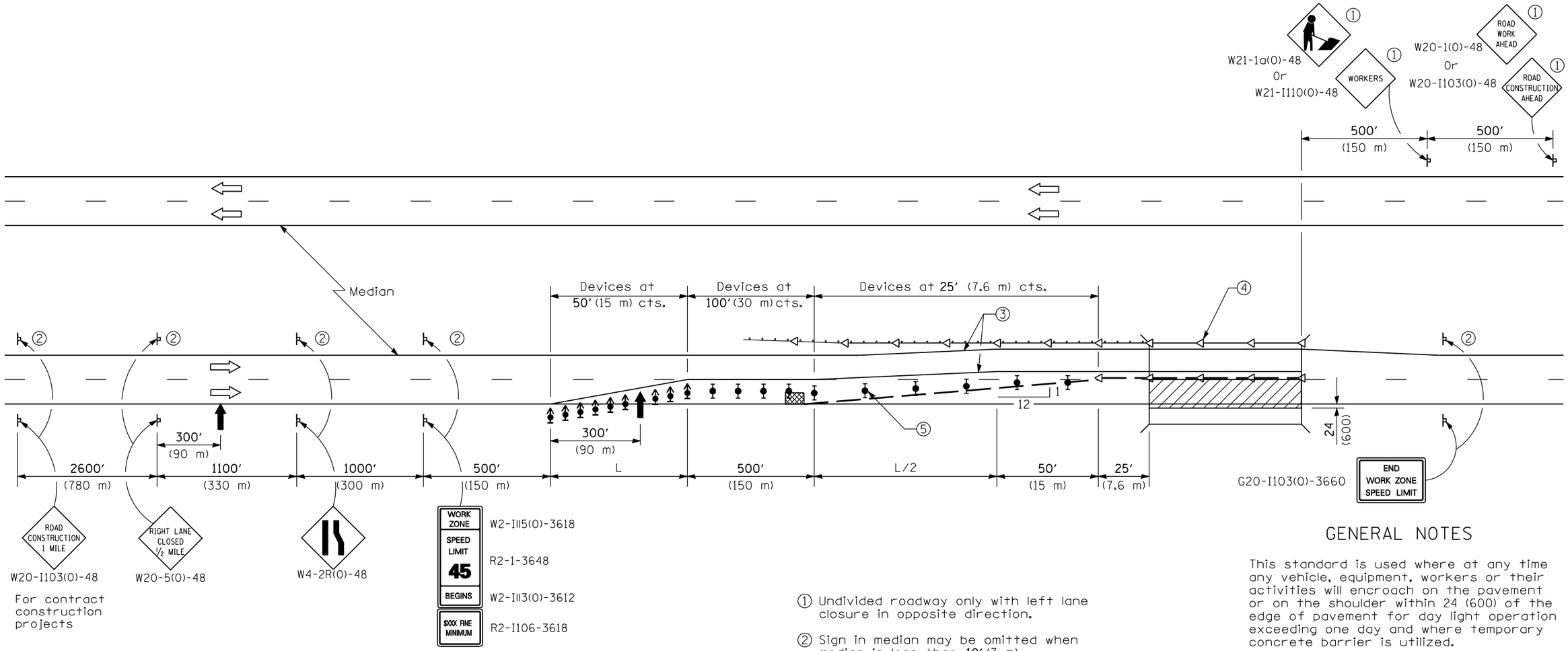

For contract construction projects

For maintenance and utility projects

SYMBOLS

- Arrow board
- Work area
- Sign
- Direction indicator barricade with steady burn monodirectional light
- Type II barricade, drum, or vertical barricade with steady burn monodirectional light
- Temporary concrete barrier
- Monodirectional barrier wall/guardrail marker
- Impact attenuator

1. Undivided roadway only with left lane closure in opposite direction.
2. Sign in median may be omitted when median is less than 10′ (3 m).
3. Temporary pavement marking tape shall be placed throughout the taper and along-side the work area. The right edge line shall be white and the left edge line shall be yellow.
4. Barrier wall/guardrail markers at 25′ (7.6 m). Markers on right shall be crystal and markers on left shall be amber. See Standards 704001 and 635001.
5. Verticle barricades shall not be used in lane shift taper.

GENERAL NOTES

This standard is used where at any time any vehicle, equipment, workers or their activities will encroach on the pavement or on the shoulder within 24 (600) of the edge of pavement for day light operation exceeding one day and where temporary concrete barrier is utilized.

When work is being performed in the left lane, the set up would be a mirror image to what is shown.

Calculate L as follows:

NORMAL POSTED SPEED	FORMULAS English	FORMULAS Metric
45 mph or more	L = WS	L = 0.65WS

W = Width of offset in feet (meters).

S = Normal posted speed in mph.

All dimensions are in inches (millimeters) unless otherwise shown.

Illinois Department of Transportation

APPROVED January 1, 2009
ENGINEER OF OPERATIONS

APPROVED January 1, 2009
ENGINEER OF DESIGN AND ENVIRONMENT

ISSUED 1-1-00

DATE	REVISIONS
1-1-09	Switched units to English (metric), barr.'s to type II in lane shift.
1-1-08	Added lane shift at work area. Omitted vertical panels.

LANE CLOSURE, MULTILANE, WITH BARRIER, FOR SPEEDS ≥ 45 MPH TO 55 MPH

STANDARD 701423-03

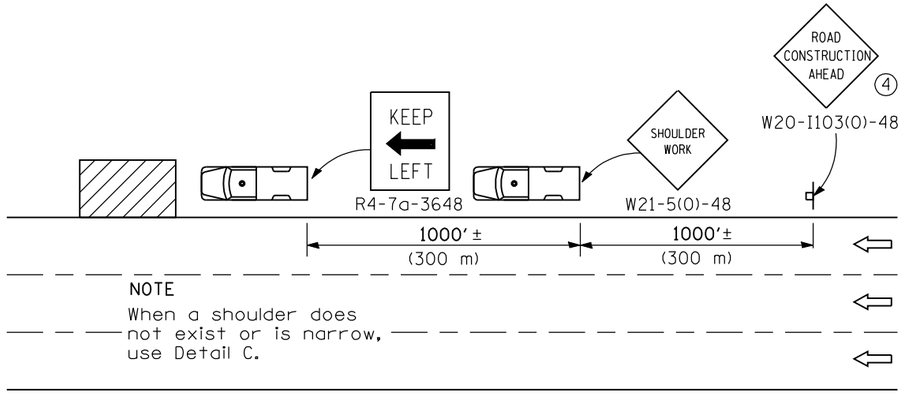

DETAIL A

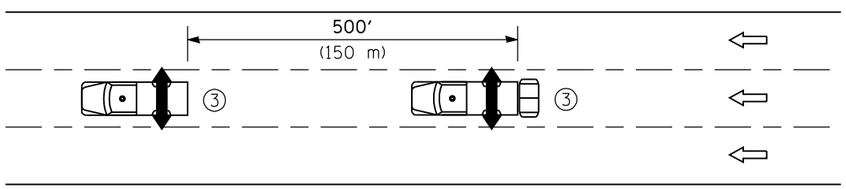

DETAIL B

(1 Pavement marking operations of an interior lane only)

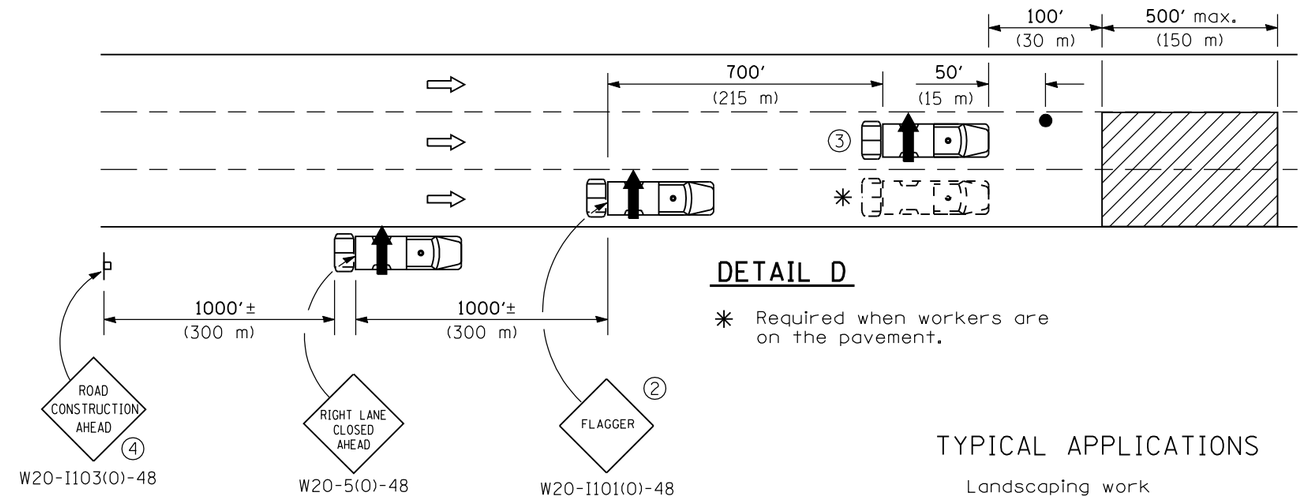

DETAIL D

* Required when workers are on the pavement.

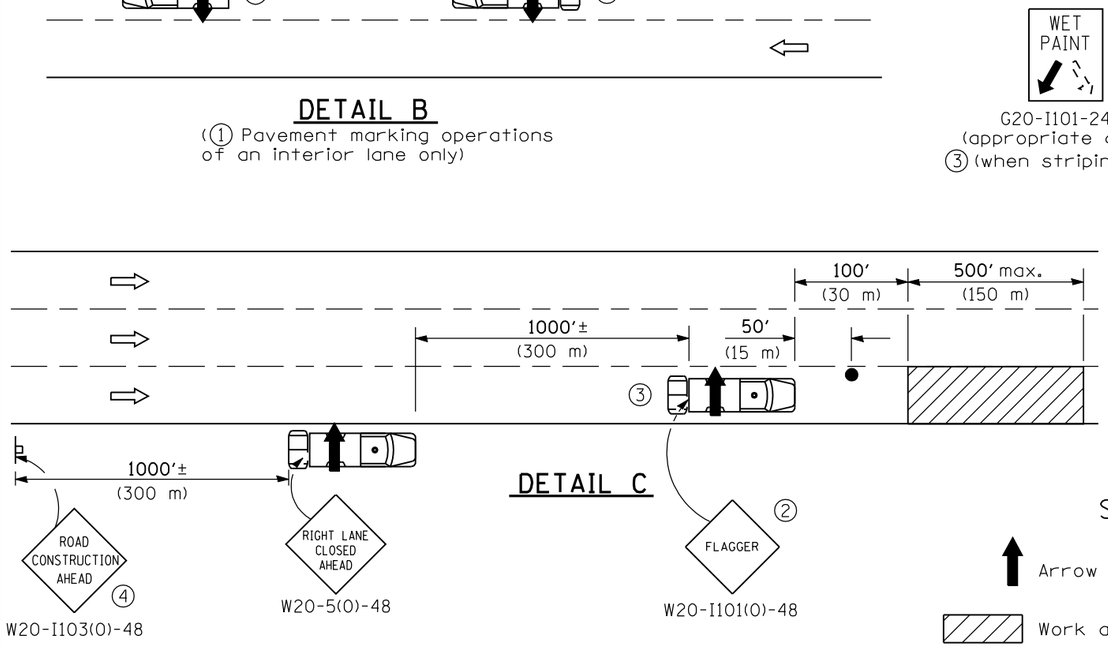

DETAIL C

G20-I101-2430
(appropriate arrow)
3 (when striping only)

1. DETAIL B shall be used only for pavement marking operations where workers are not present on the pavement. For other operations involving an interior lane, use DETAIL D.
2. Flaggers are required when workers are on the pavement.
3. For striping operations only. See sign arrow detail on this standard.
4. For operations which are on the roadway or shoulder, greater than 15 minutes and up to 1 hour.

SYMBOLS

- Arrow board
- Work area
- Truck with flashing amber light
- Truck mounted attenuator
- Flagger with traffic control sign

TYPICAL APPLICATIONS

- Landscaping work
- Utility work
- Pavement marking
- Weed spraying
- Roadometer measurements
- Debris cleanup
- Crack pouring

GENERAL NOTES

This Standard is used where any vehicle, equipment, workers or their activities will require: 1) stationary operations up to 1 hour, or 2) a continuous or intermittent moving operation where the average speed of movement is greater than 2 km/h (1 mph).

This Standard is also applicable when work is being performed in the left lane(s) or on the median shoulder. Under these conditions, KEEP RIGHT signs shall be substituted for KEEP LEFT signs and arrow board indications shall be directed to the right.

All dimensions are in inches (millimeter) unless otherwise shown.

Illinois Department of Transportation

APPROVED January 1, 2009
ENGINEER OF OPERATIONS

APPROVED January 1, 2009
ENGINEER OF DESIGN AND ENVIRONMENT

ISSUED 1-1-97

DATE	REVISIONS
1-1-09	Switched units to
	English (metric).
	Corrected sign No.'s.
1-1-05	Revised Detail A
	and deleted FLAGGER
	SYMBOL sign.

LANE CLOSURE, MULTILANE, INTERMITTENT OR MOVING OPER., FOR SPEEDS ≥ 45 MPH

STANDARD 701426-03

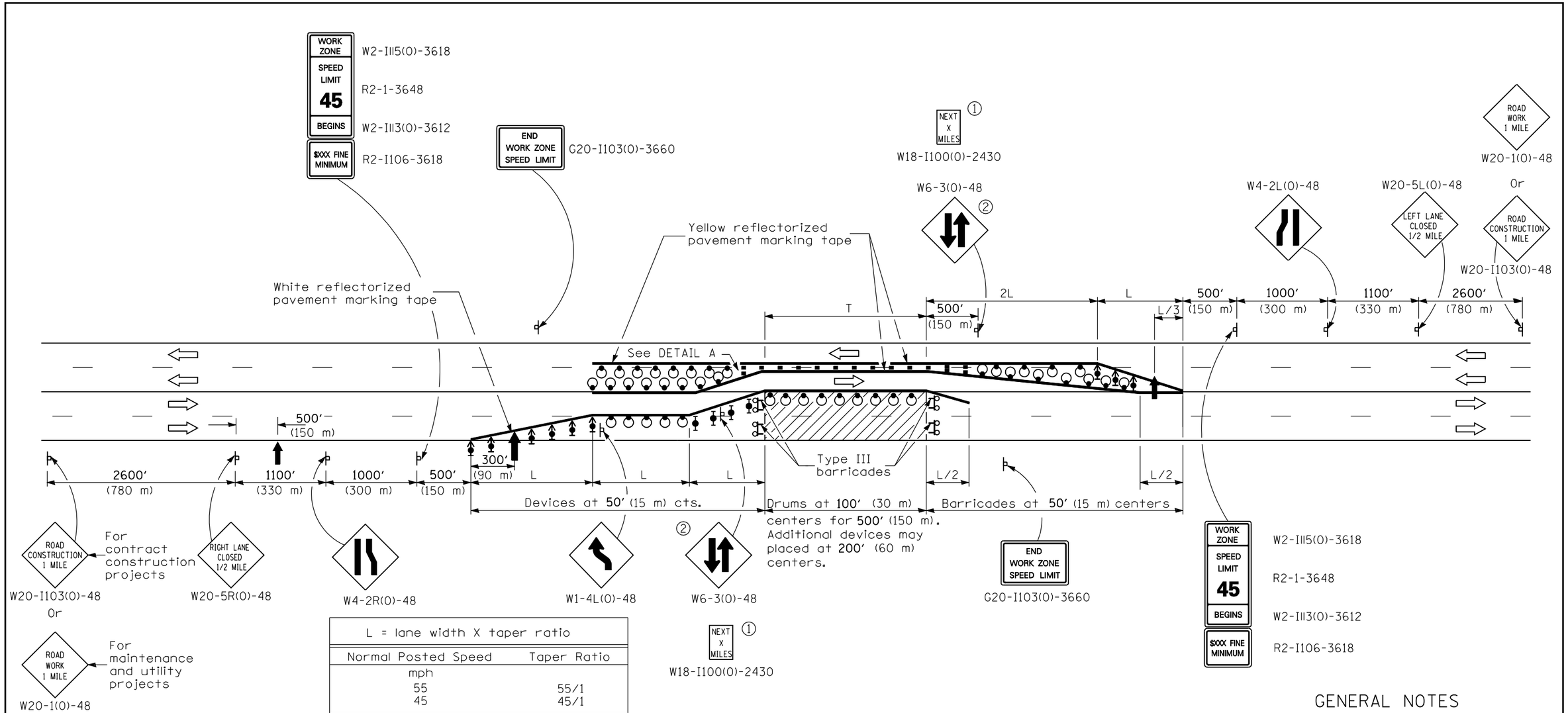

L = lane width X taper ratio	
Normal Posted Speed	Taper Ratio
mph	
55	55/1
45	45/1

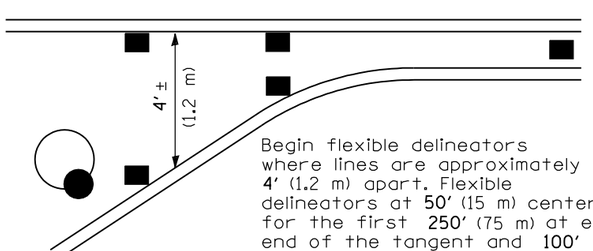

Begin flexible delineators where lines are approximately 4′ (1.2 m) apart. Flexible delineators at 50′ (15 m) centers for the first 250′ (75 m) at each end of the tangent and 100′ (30 m) centers thereafter.

DETAIL A

SYMBOLS

- Arrow board
- Work area
- Sign
- Drum with steady burn monodirectional light
- Direction indicator barricade with steady burn monodirectional light
- Type II barricade with steady burn monodirectional light
- Flexible delineator
- Type III barricade with flashing monodirectional lights

① Shall be repeated every 1 mile (1.6 km).

② Shall be repeated every 1 mile (1.6 km) in each direction in the tangent section unless concrete barrier is used.

GENERAL NOTES

This Standard is used where at any time, any vehicle, equipment, workers or their activities require the closure of two adjacent lanes and a temporary crossover is provided by making use of one lane of pavement normally used by opposing flow of traffic and flexible delineators are used to separate the opposing traffic.

Cones may be substituted for flexible delineators during daytime operations at half the spacing.

All dimensions are in inches (millimeters) unless otherwise shown.

Illinois Department of Transportation

APPROVED January 1, 2009
ENGINEER OF OPERATIONS

APPROVED January 1, 2009
ENGINEER OF DESIGN AND ENVIRONMENT

ISSUED 1-1-97

DATE	REVISIONS
1-1-09	Added lane shift sign.
	Switched units to
	English (metric).
1-1-08	Revised note ②

LANE CLOSURE, MULTILANE, UNDIV. WITH CROSSOVER, FOR SPEEDS ≥ 45 MPH TO 55 MPH

STANDARD 701431-05

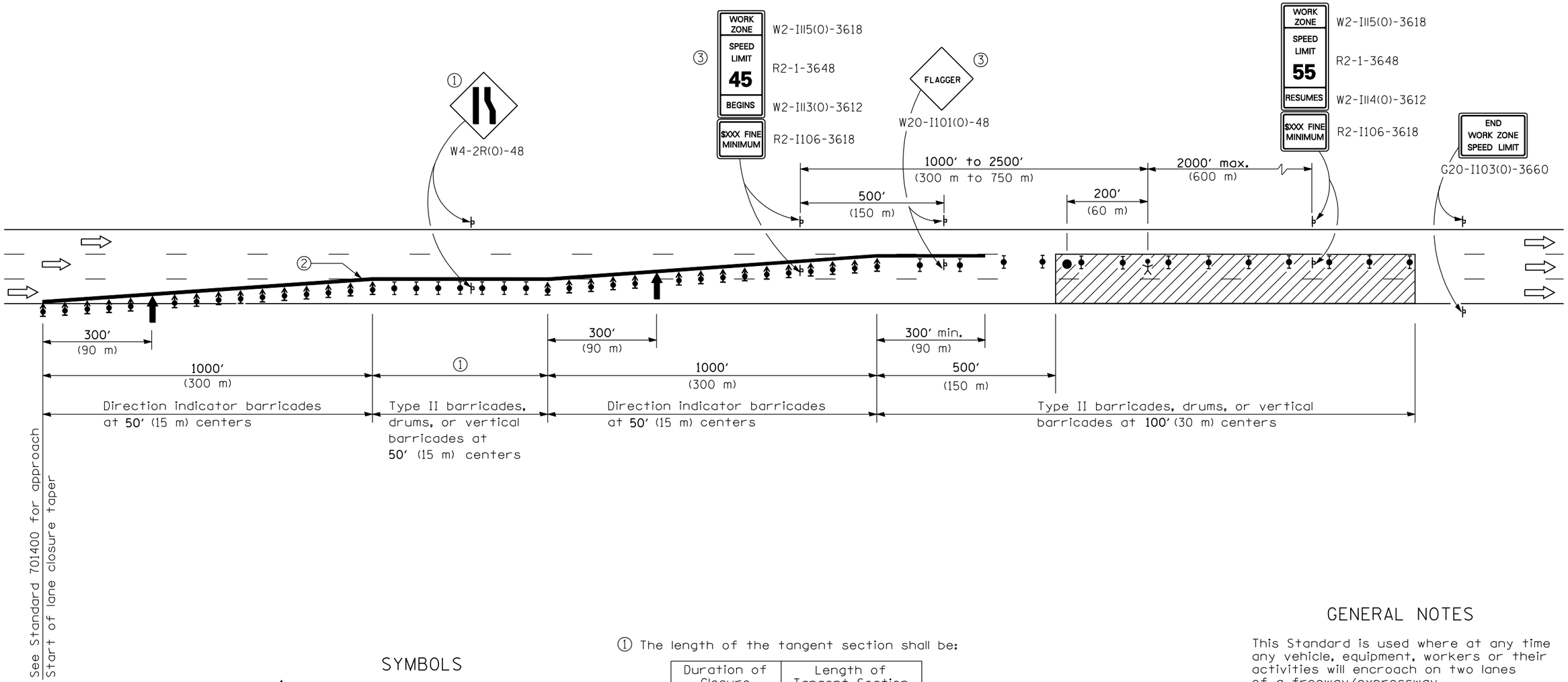

SYMBOLS

- Arrow board
- Work area
- Worker
- Sign
- Direction indicator barricade with steady burn monodirectional light
- Type II barricade, drum, or vertical barricade with steady burn monodirectional light
- Flagger with traffic control sign

① The length of the tangent section shall be:

Duration of Closure	Length of Tangent Section
< 14 Days	1000′ (300 m)
≥ 14 Days	2000′ (600 m)

For off peak closures less than 24 hours, the tangent section and the lane reduction sign may be omitted if approved by the Engineer.

② Reflectorized temporary pavement marking tape shall be placed throughout the tapers and for 300′ (90 m) along-side the work area when the closure time is greater than fourteen days. The edge line shall be white for right lane closures and yellow for left lane closures. Temporary raised reflective pavement markers at 25′ (8 m) shall be used to supplement the pavement marking tape.

③ Work zone speed limits signs and FLAGGER signs shall be moved as necessary to maintain the required spacing between the signs and the workers in each separate work activity.

GENERAL NOTES

This Standard is used where at any time any vehicle, equipment, workers or their activities will encroach on two lanes of a freeway/expressway.

This Standard must always be used in combination with Standard 701400.

This Standard also applies when work is being performed in the left lanes. Under these conditions, the set up would be a mirror image to what is shown.

Check barricades shall be placed in the middle of the closed lanes at 1000′ (300 m) centers.

All dimensions are in inches (millimeters) unless otherwise shown.

Illinois Department of Transportation

APPROVED January 1, 2009
ENGINEER OF OPERATIONS

APPROVED January 1, 2009
ENGINEER OF DESIGN AND ENVIRONMENT

ISSUED 1-1-05

DATE	REVISIONS
1-1-09	Switched units to English (metric).
1-1-05	New Standard.

TWO LANE CLOSURE FREEWAY/EXPRESSWAY

STANDARD 701446-01

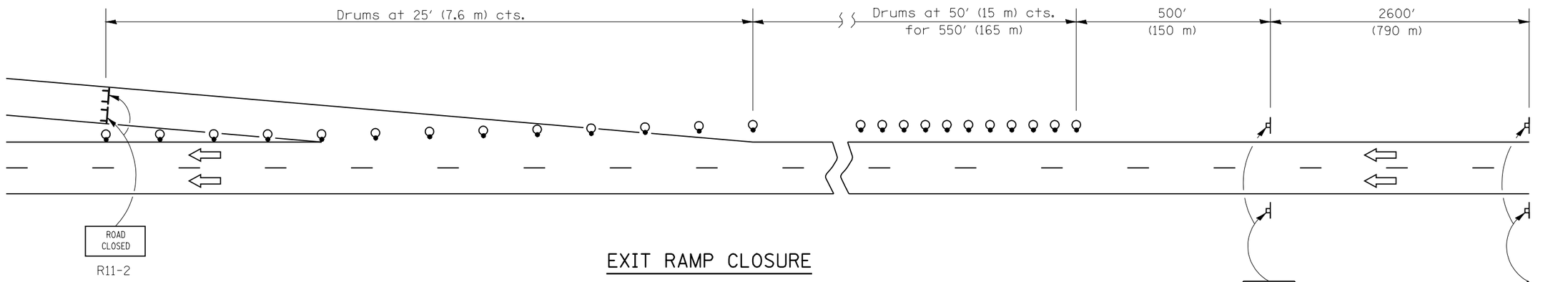

EXIT RAMP CLOSURE

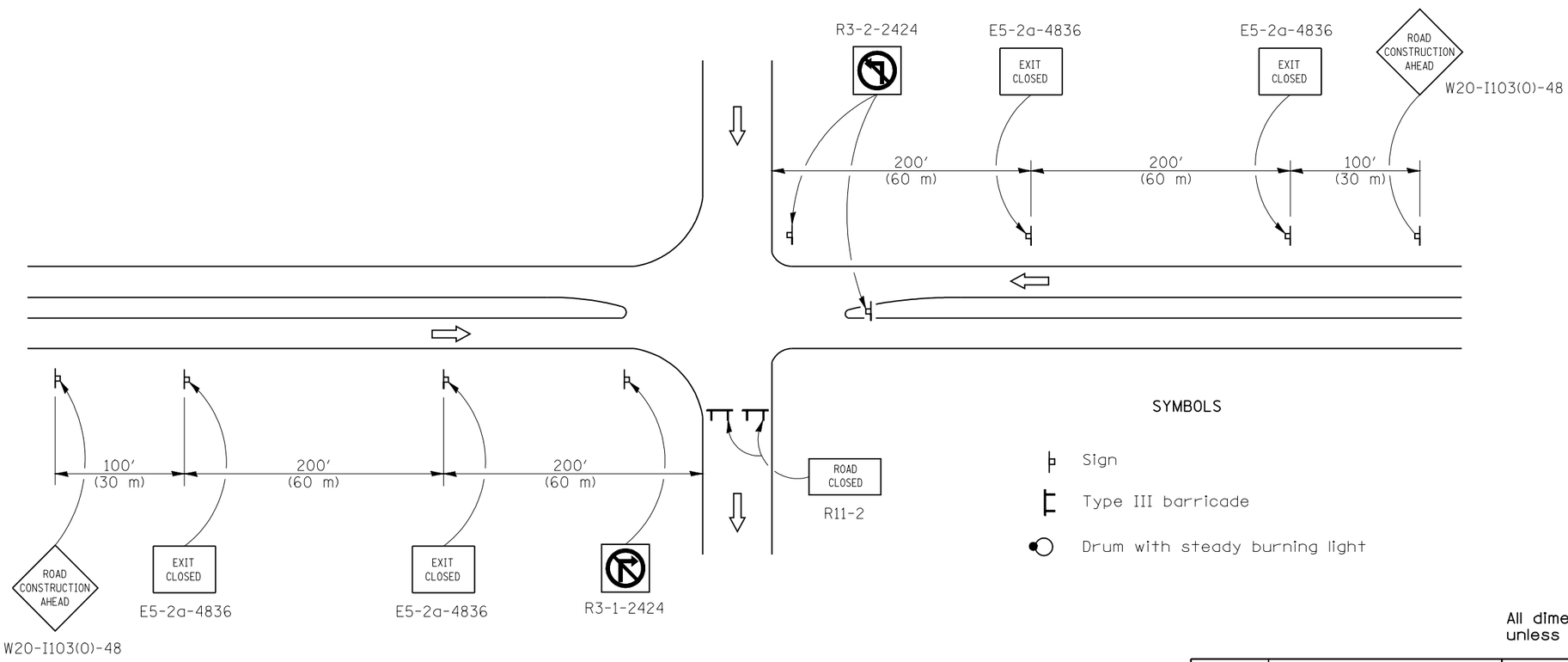

SYMBOLS

- Sign
- Type III barricade
- Drum with steady burning light

All dimensions are in inches (millimeters) unless otherwise shown.

ENTRANCE RAMP CLOSURE

Illinois Department of Transportation

APPROVED January 1, 2010
ENGINEER OF SAFETY ENGINEERING

APPROVED January 1, 2010
ENGINEER OF DESIGN AND ENVIRONMENT

ISSUED 1-1-09

DATE	REVISIONS
1-1-10	Corrected sign numbers.
1-1-09	New Standard.

RAMP CLOSURE
FREEWAY/EXPRESSWAY

STANDARD 701451-01

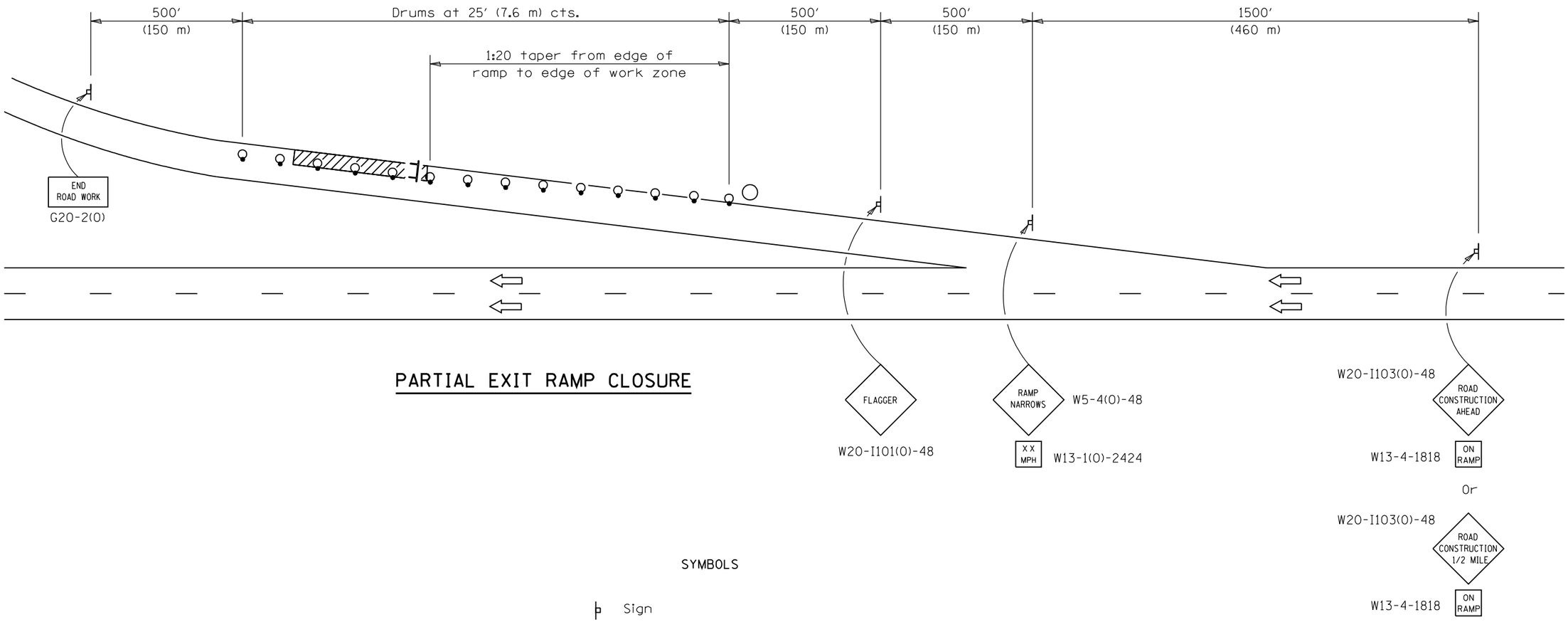

PARTIAL EXIT RAMP CLOSURE

SYMBOLS

- Sign
- Type III barricade
- Drum with steady burning light
- Work zone
- Flagger with traffic control sign

All dimensions are in inches (millimeters) unless otherwise shown.

Illinois Department of Transportation

APPROVED January 1, 2009
ENGINEER OF OPERATIONS

APPROVED January 1, 2009
ENGINEER OF DESIGN AND ENVIRONMENT

ISSUED 1-1-09

DATE	REVISIONS
1-1-09	New Standard.

PARTIAL EXIT
RAMP CLOSURE
FREEWAY/EXPRESSWAY

STANDARD 701456

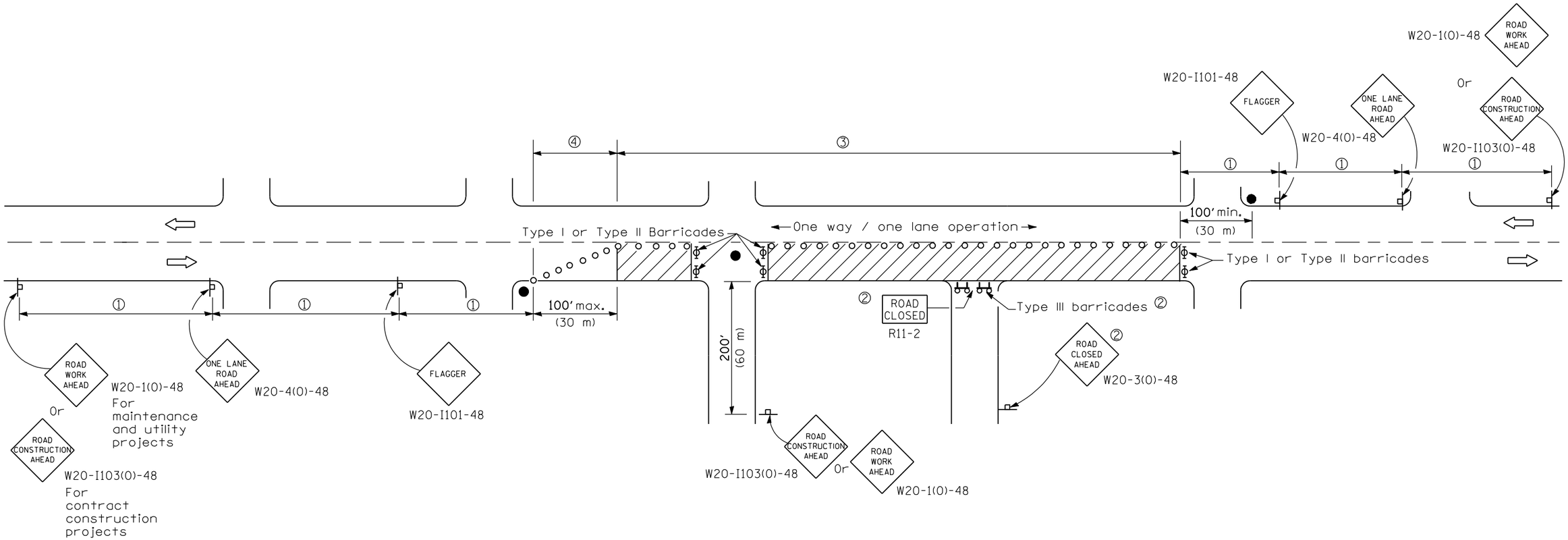

SIGN SPACING	
Posted Speed	Sign Spacing
55	500' (150 m)
50-45	350' (100 m)
<45	200' (60 m)

SYMBOLS

- Work area
- Cone, drum or barricade (not required for moving operations)
- Sign on portable or permanent support
- Flagger with traffic control sign
- Barricade or drum with flashing light
- Type III barricade with flashing lights

① Refer to SIGN SPACING TABLE for distances.

② For approved sideroad closures.

③ Cones at 25' (8 m) centers for 250' (75 m). Additional cones may be placed at 50' (15 m) centers. When drums or Type I or Type II barricades are used. the interval between devices may be doubled.

④ Cones, drums or barricades at 20' (6 m) centers.

GENERAL NOTES

This Standard is used where at anytime, day or night, any vehicle, equipment, workers or their activities encroach on the pavement requiring the closure of one traffic lane in an urban area.

All dimensions are in inches (millimeters) unless otherwise shown.

Illinois Department of Transportation

APPROVED January 1, 2009
ENGINEER OF OPERATIONS

APPROVED January 1, 2009
ENGINEER OF DESIGN AND ENVIRONMENT

ISSUED 1-1-97

DATE	REVISIONS
1-1-09	Switched units to
	English (metric).
	Corrected sign No.'s.
1-1-08	Added note ④

URBAN LANE CLOSURE, 2L, 2W, UNDIVIDED

STANDARD 701501-05

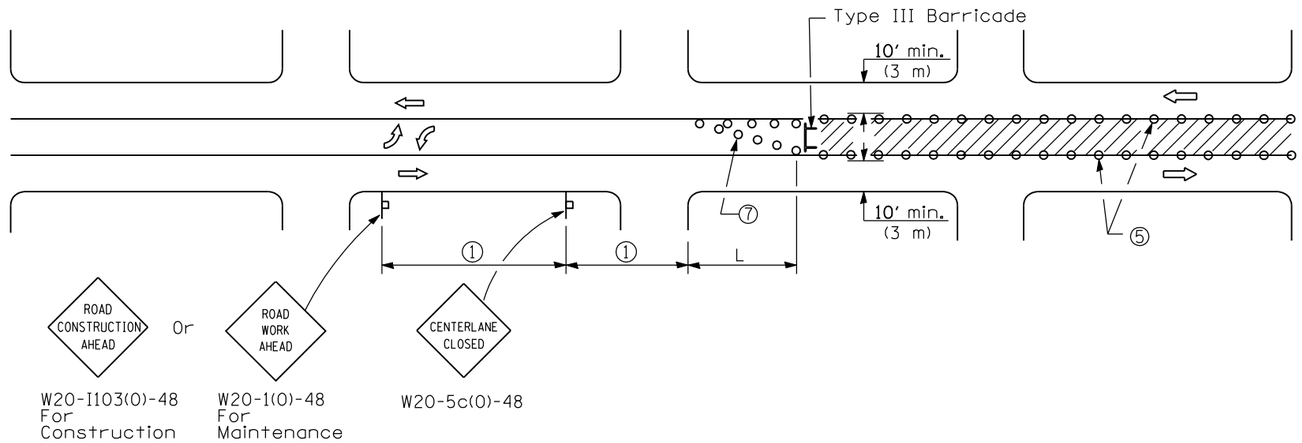

CASE I

(Signs required for both directions)

SIGN SPACING	
Posted Speed	Sign Spacing
55 ④	500' (150 m)
50-45 ④	350' (100 m)
<45	200' (60 m)

SYMBOLS

- Arrow board
- Work area
- Barricade or drum with flashing light
- Flagger with traffic control sign
- Cone, drum or barricade (Cones for daytime use only)
- Sign on portable or permanent support

① Refer to SIGN SPACING TABLE for distances.

② Required for speeds > 40 mph (70 km/h).

③ Required if work exceeds 500' (164 m) or 1 block.

④ For speeds exceeding 45 mph (80 km/h) contact the District Operations Office for approval of sign spacing.

⑤ Cones at 25' (8 m) centers for 250' (75 m). Additional cones may be placed at 15 m (50') centers. When drums or type I or II barricades are used, the interval between devices may be doubled.

⑥ For approved sideroad closures.

⑦ Cones, drums or barricades at 20' (6 m) centers in taper.

GENERAL NOTES

This Standard is used to close one lane of an urban, two lane, two way roadway with a bidirectional turn lane.

Case I applies when no workers are present. When workers are present, two lanes shall be closed and traffic control shall be according to Standard 701501.

Calculate L as follows:

SPEED LIMIT	FORMULAS English	FORMULAS (Metric)
40 mph (70 km/h) or less:	$L = \frac{WS^2}{60}$	$L = \frac{WS^2}{150}$
80 km/h (45 mph) or greater:	$L = (W)(S)$	$L = 0.65(W)(S)$

W = Width of offset in feet (meters).

S = Normal posted speed mph (km/h).

All dimensions are in inches (millimeters) unless otherwise shown.

Illinois Department of Transportation

APPROVED January 1, 2009
ENGINEER OF OPERATIONS

APPROVED January 1, 2009
ENGINEER OF DESIGN AND ENVIRONMENT

ISSUED 1-1-01

DATE	REVISIONS
1-1-09	Switched units to
	English (metric).
	Corrected sign No.'s.
1-1-08	Added note ⑦

URBAN LANE CLOSURE, 2L, 2W, WITH BIDIRECTIONAL LEFT TURN LANE

(Sheet 1 of 2)

STANDARD 701502-03

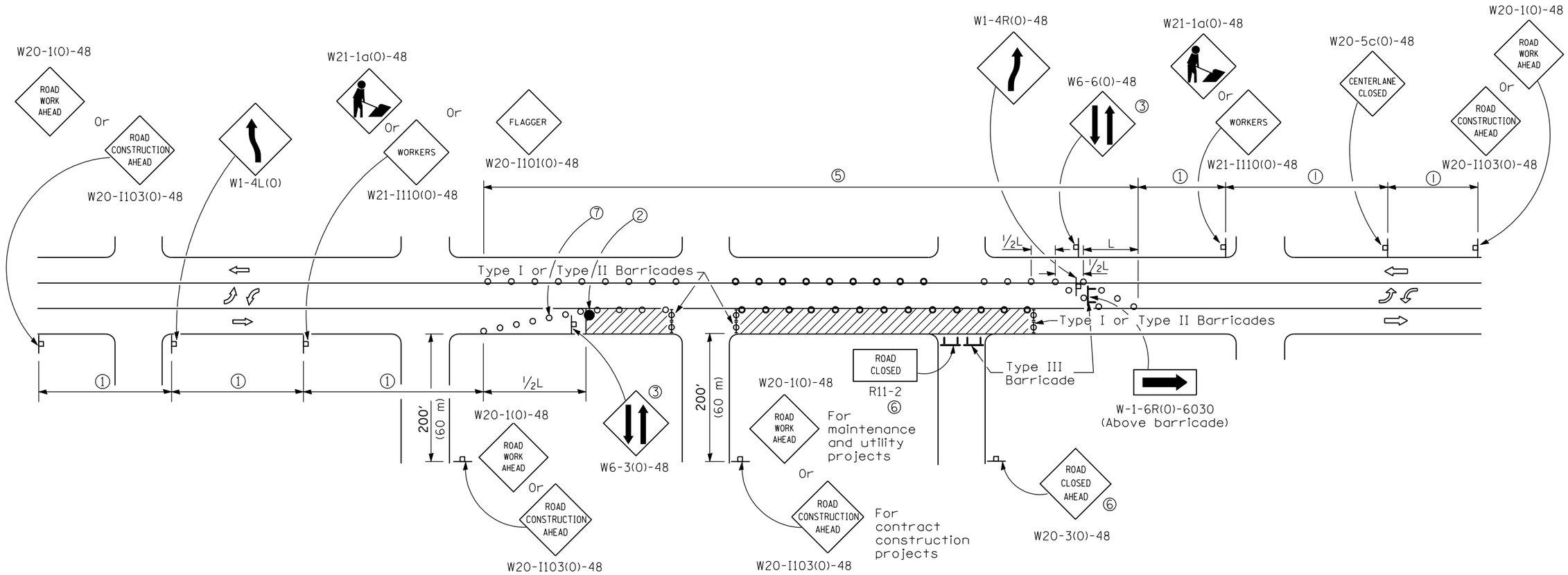

CASE II

Illinois Department of Transportation

APPROVED January 1, 2009
ENGINEER OF OPERATIONS

APPROVED January 1, 2009
ENGINEER OF DESIGN AND ENVIRONMENT

ISSUED 1-1-01

URBAN LANE CLOSURE, 2L, 2W, WITH BIDIRECTIONAL LEFT TURN LANE

(Sheet 2 of 2)

STANDARD 701502-03

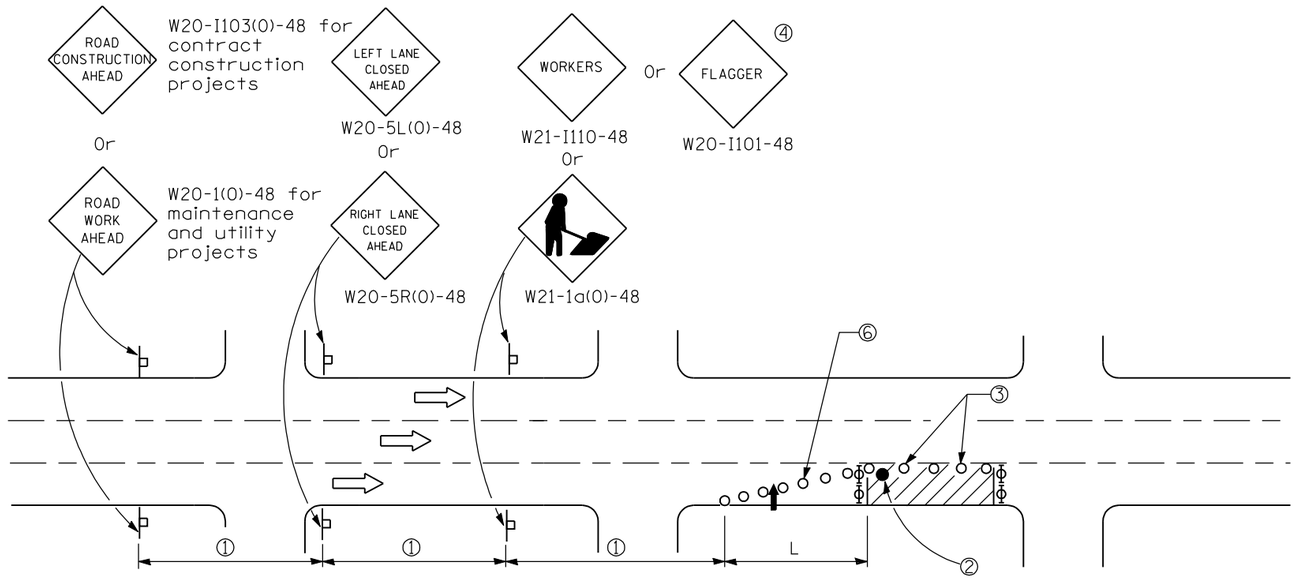

SIGN SPACING	
Posted Speed	Sign Spacing
55	500′ (150 m)
50-45	350′ (100 m)
<45	200′ (60 m)

SYMBOLS

- Arrow board
- Cone, drum or barricade
- Sign on portable or permanent support
- Work area
- Barricade or drum with flashing light
- Type III barricade with flashing lights
- Flagger with traffic control sign.

① Refer to SIGN SPACING TABLE for distances.

② Required for speeds > 40 MPH

③ Cones at 25′ (8 m) centers for 250′ (75 m). Additional cones may be placed at 50′ (15 m) centers. When drums or Type I or Type II barricades are used, the interval between devices may be doubled.

④ Use flagger sign only when flagger is present.

⑤ For approved sideroad closures.

⑥ Cones, drums or barricades at 20′ (6 m) in taper.

GENERAL NOTES

This Standard is used where at anytime, day or night, any vehicle, equipment, workers or their activities encroach on the pavement during shoulder operations or where construction requires lane closures in urban areas.

Calculate L as follows:

SPEED LIMIT	FORMULAS English	FORMULAS (Metric)
40 mph (70 km/h) or less:	$L = \frac{WS^2}{60}$	$L = \frac{WS^2}{150}$
45 mph (80 km/h) or greater:	$L = (W)(S)$	$L = 0.65(W)(S)$

W = Width of offset in feet (meters).

S = Normal posted speed mph (km/h).

All dimensions are in inches (millimeters) unless otherwise shown.

Illinois Department of Transportation

APPROVED January 1, 2009
ENGINEER OF OPERATIONS

APPROVED January 1, 2009
ENGINEER OF DESIGN AND ENVIRONMENT

ISSUED 1-1-97

DATE	REVISIONS
1-1-09	Switched units to
	English (metric).
	Corrected sign No.'s.
1-1-08	Added note ⑥

URBAN LANE CLOSURE, MULTILANE, 1W OR 2W WITH NONTRAVERSABLE MEDIAN

(Sheet 1 of 2)

STANDARD 701601-06

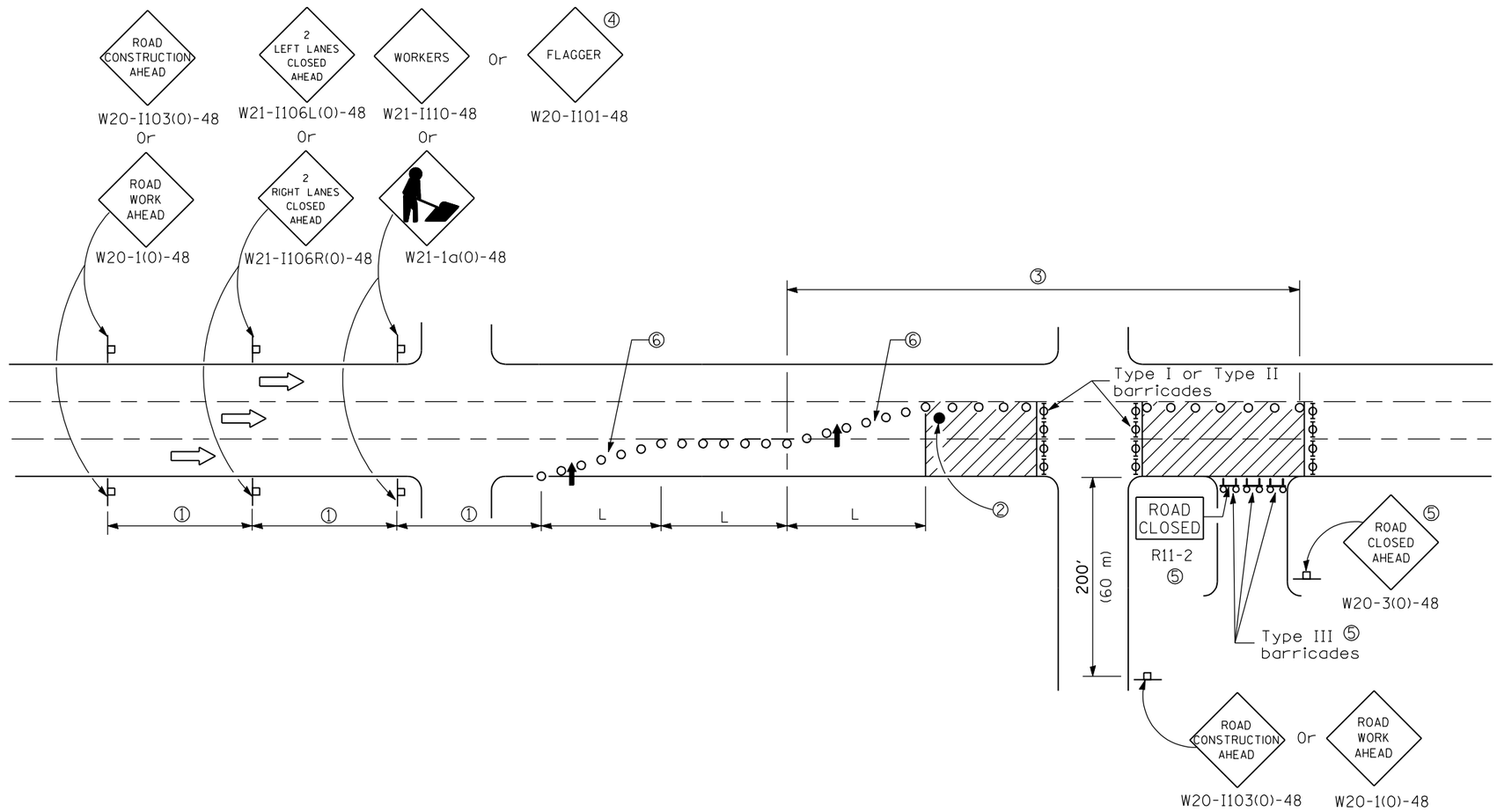

Illinois Department of Transportation

APPROVED January 1, 2009
ENGINEER OF OPERATIONS

APPROVED January 1, 2009
ENGINEER OF DESIGN AND ENVIRONMENT

ISSUED 1-1-97

URBAN LANE CLOSURE, MULTILANE, 1W OR 2W WITH NONTRAVERSABLE MEDIAN

(Sheet 2 of 2)

STANDARD 701601–06

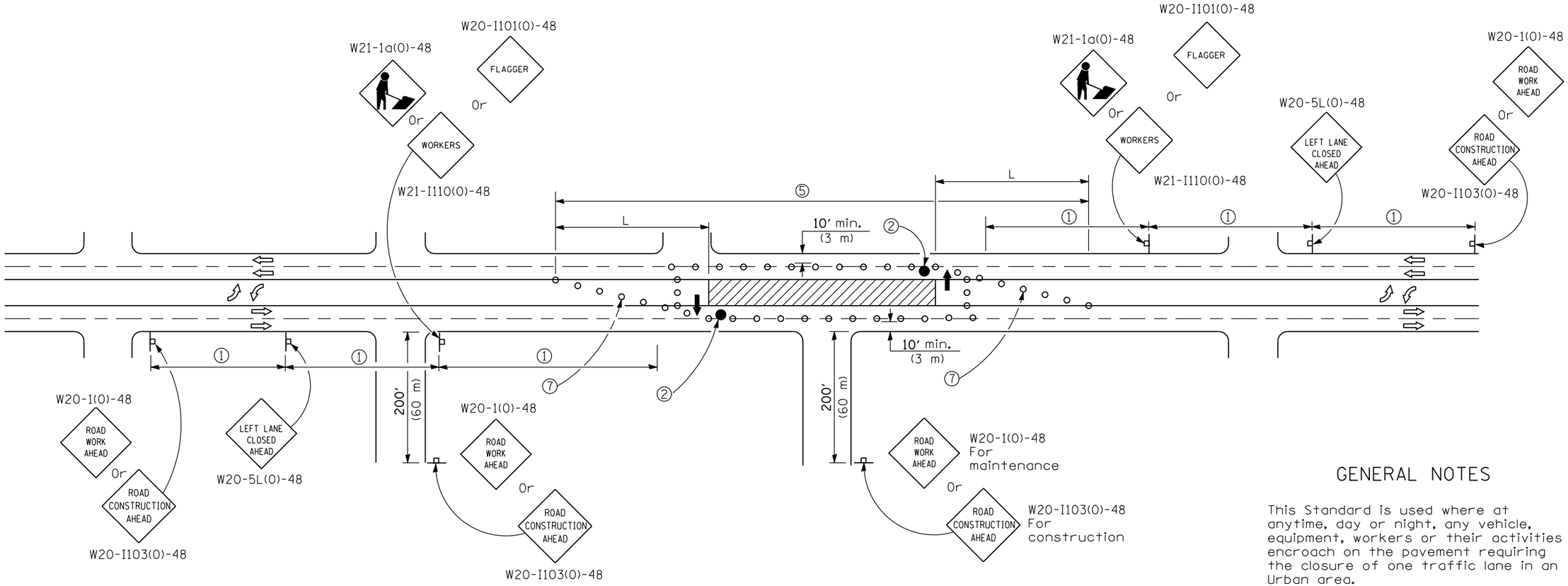

CASE I

SYMBOLS

- Arrow board
- Work area
- Barricade or drum with steady burning mondirectional light
- Flagger with traffic control sign
- Cone, drum or barricade (Cones for daytime use only)
- Sign on portable or permanent support
- Type III Barricade

SIGN SPACING	
Posted Speed	Sign Spacing
55 ④	500' (150 m)
50-45 ④	350' (100 m)
<45	200' (60 m)

① Refer to SIGN SPACING TABLE for distances.

② Required for speeds > 40 mph (70 km/h).

③ Required if work exceeds 500' (164 m) or 1 block, repeat every 1 mile (1.6 km).

④ For speeds exceeding 45 mph (80 km/h) contact the District Operations Office for approval of sign spacing.

⑤ Cones at 25' (8 m) centers for 250' (75 m). Additional cones may be placed at 15 m (50') centers. When drums or type I or II barricades are used, the interval between devices may be doubled.

⑥ For approved sideroad closures.

⑦ Cones, drums or barricades at 20' (6 m) centers in taper.

GENERAL NOTES

This Standard is used where at anytime, day or night, any vehicle, equipment, workers or their activities encroach on the pavement requiring the closure of one traffic lane in an Urban area.

If the work operation is performed between 9:00 a.m. and 3:00 p.m. and does not exceed 15 min. Traffic protection shall be as shown for Standard 701426.

Calculate L as follows:

SPEED LIMIT	FORMULAS English	FORMULAS (Metric)
40 mph (70 km/h) or less:	$L = \frac{WS^2}{60}$	$L = \frac{WS^2}{150}$
45 mph (80 km/h) or greater:	L = (W)(S)	L = 0.65(W)(S)

W = Width of offset in feet (meters).

S = Normal posted speed mph (km/h).

All dimensions are in inches (millimeters) unless otherwise shown.

Illinois Department of Transportation

APPROVED January 1, 2009
ENGINEER OF OPERATIONS
APPROVED January 1, 2009
ENGINEER OF DESIGN AND ENVIRONMENT

ISSUED 1-1-01

DATE	REVISIONS
1-1-09	Switched units to
	English (metric).
	Corrected sign No.'s.
1-1-08	Revised note ③,
	added note ⑦,
	added signs.

URBAN LANE CLOSURE, MULTILANE, 2W WITH BIDIRECTIONAL LEFT TURN LANE

(Sheet 1 of 4)

STANDARD 701602-04

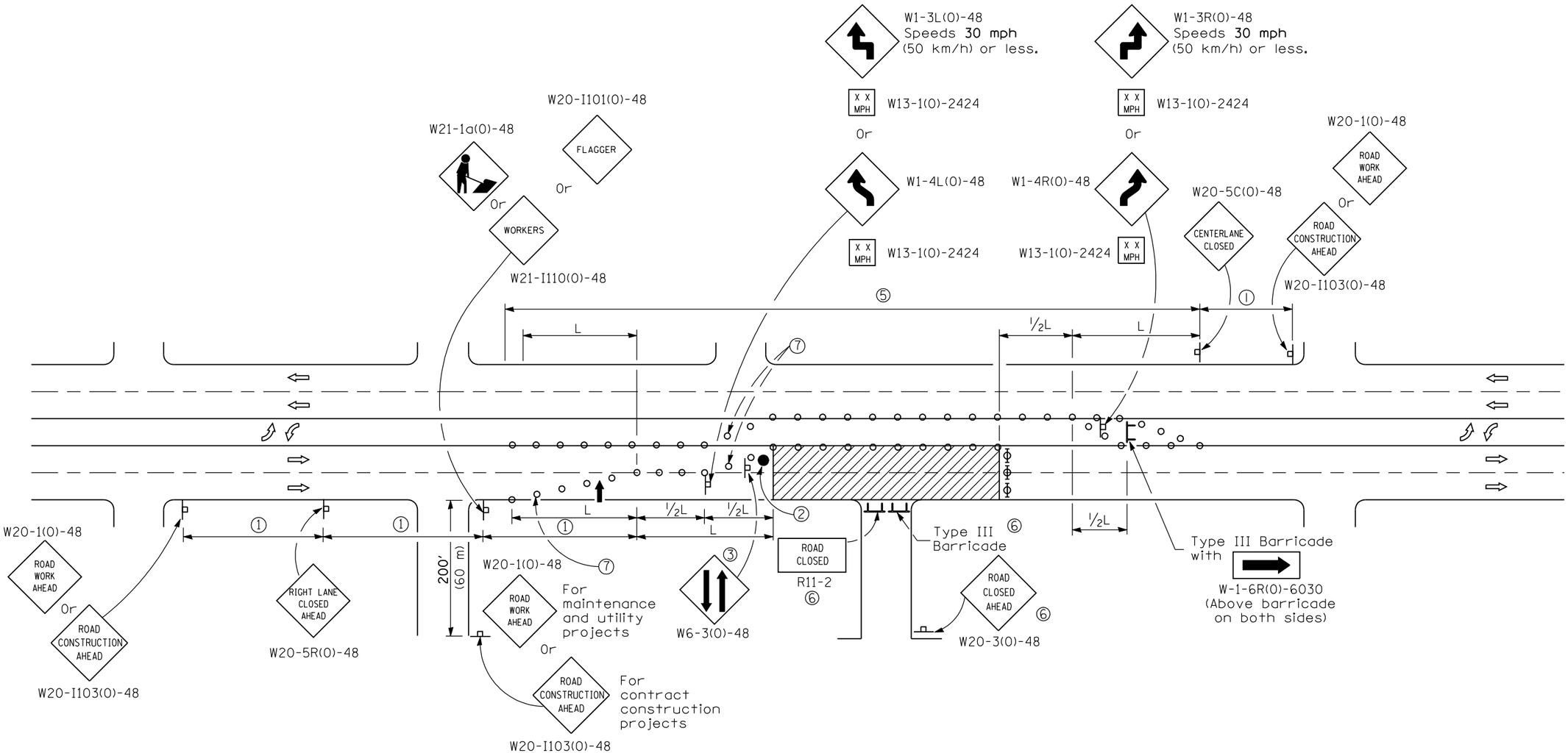

CASE II

Illinois Department of Transportation

APPROVED January 1, 2009
ENGINEER OF OPERATIONS

APPROVED January 1, 2009
ENGINEER OF DESIGN AND ENVIRONMENT

ISSUED 1-1-01

URBAN LANE CLOSURE, MULTILANE, 2W WITH BIDIRECTIONAL LEFT TURN LANE

(Sheet 2 of 4)

STANDARD 701602-04

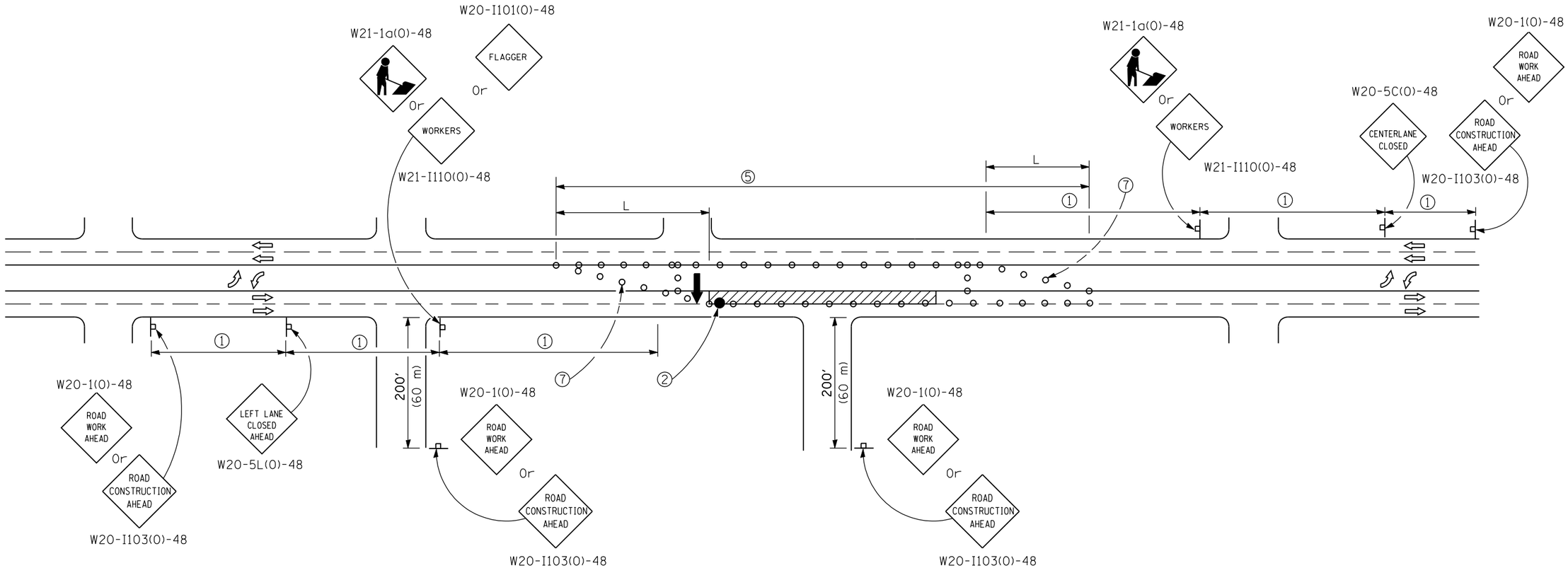

CASE III

Illinois Department of Transportation

APPROVED January 1, 2009
ENGINEER OF OPERATIONS
APPROVED January 1, 2009
ENGINEER OF DESIGN AND ENVIRONMENT

ISSUED 1-1-01

URBAN LANE CLOSURE, MULTILANE, 2W WITH BIDIRECTIONAL LEFT TURN LANE

(Sheet 3 of 4)

STANDARD 701602-04

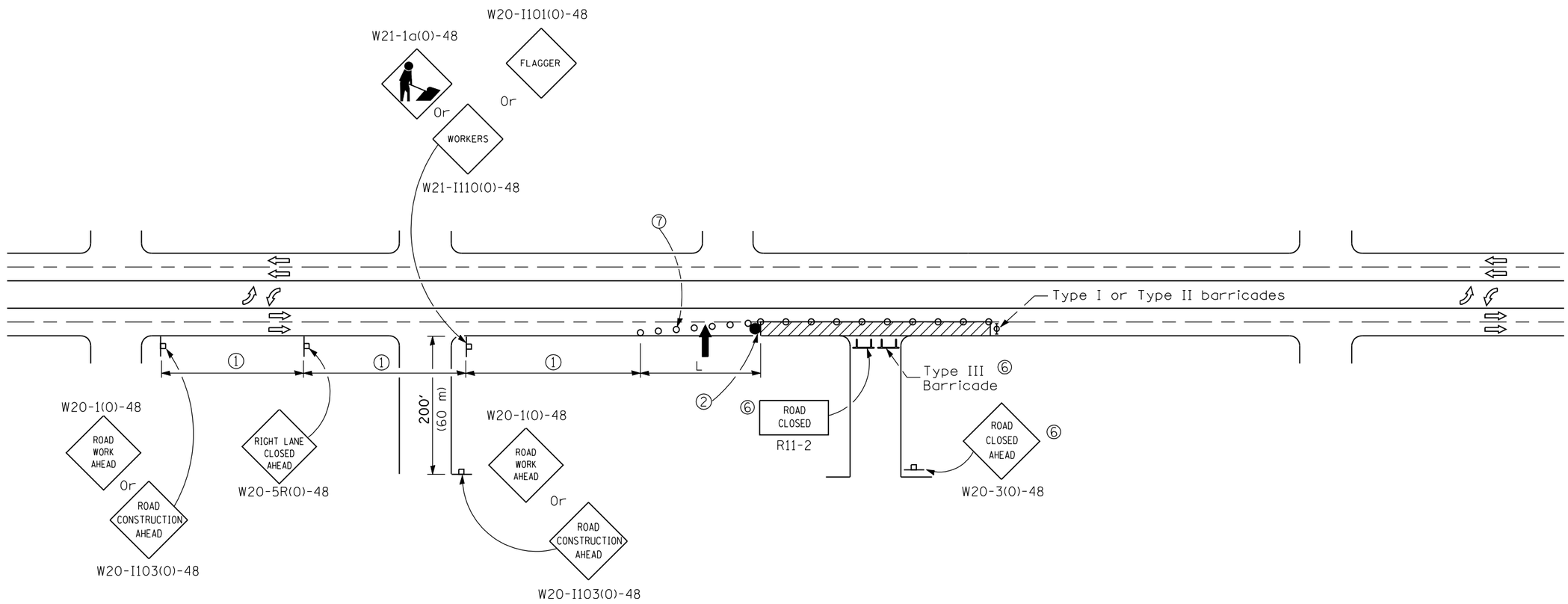

CASE IV

Illinois Department of Transportation

APPROVED January 1, 2009
ENGINEER OF OPERATIONS

APPROVED January 1, 2009
ENGINEER OF DESIGN AND ENVIRONMENT

ISSUED 1-1-01

URBAN LANE CLOSURE, MULTILANE, 2W WITH BIDIRECTIONAL LEFT TURN LANE

(Sheet 4 of 4)

STANDARD 701602-04

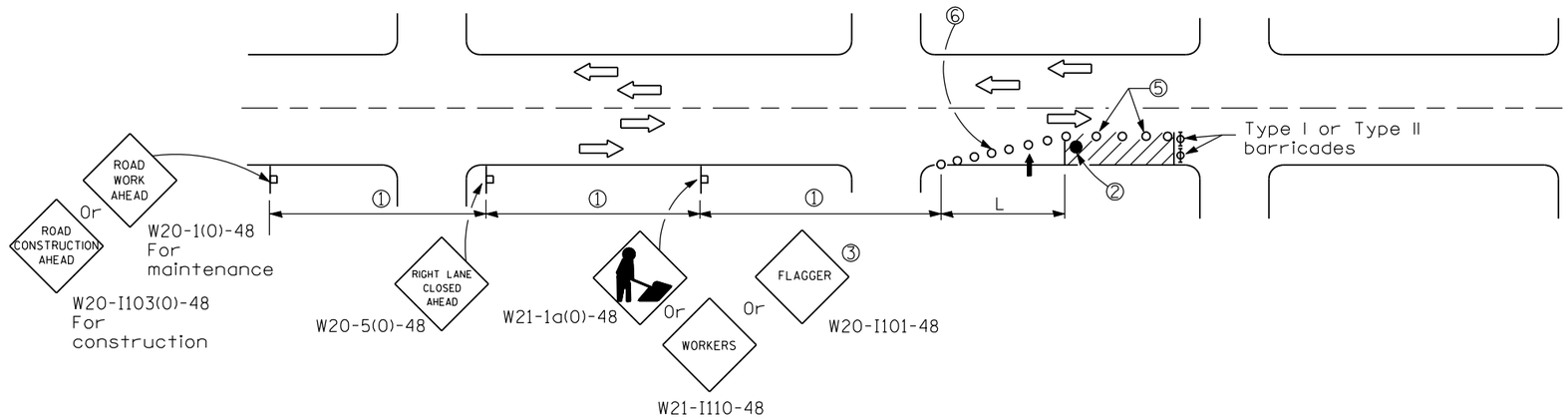

SIGN SPACING	
Posted Speed	Sign Spacing
55	500′ (150 m)
50-45	350′ (100 m)
<45	200′ (60 m)

SYMBOLS

- Arrow board
- Cone, drum or barricade
- Sign on portable or permanent support
- Work area
- Barricade or drum with flashing light
- Type III barricade with flashing lights
- Flagger with traffic control sign.

① Refer to SIGN SPACING TABLE for distances.

② Required for speeds > 40 MPH

③ Use flagger sign only when flagger is present.

④ For approved sideroad closures.

⑤ Cones at 25′ (8 m) centers for 250′ (75 m). Additional cones may be placed at 50′ (15 m) centers. When drums or Type I or Type II barricades are used, the interval between devices may be doubled.

⑥ Cones, drums or barricades at 6′ (20 m) centers in taper.

⑦ Repeat every 1 mile (1.6 km).

GENERAL NOTES

This Standard is used where at anytime, day or night, any vehicle, equipment, workers or their activities encroach on the pavement requiring the closure of one or more traffic lanes in an urban area.

Calculate L as follows:

SPEED LIMIT	FORMULAS English	FORMULAS (Metric)
40 mph (70 km/h) or less:	$L = \frac{WS^2}{60}$	$L = \frac{WS^2}{150}$
45 mph (80 km/h) or greater:	L=(W)(S)	L=0.65(W)(S)

W = Width of offset in feet (meters).

S = Normal posted speed mph (km/h).

All dimensions are in inches (millimeters) unless otherwise shown.

Illinois Department of Transportation

APPROVED January 1, 2009
ENGINEER OF OPERATIONS

APPROVED January 1, 2009
ENGINEER OF DESIGN AND ENVIRONMENT

ISSUED 1-1-97

DATE	REVISIONS
1-1-09	Switched units to
	English (metric). Omitted
	large arrow signs.
1-1-08	Replaced arrow board
	with lane shift sign.
	Added notes ⑥ & ⑦

URBAN LANE CLOSURE, MULTILANE, 2W WITH MOUNTABLE MEDIAN

(Sheet 1 of 2)

STANDARD 701606-06

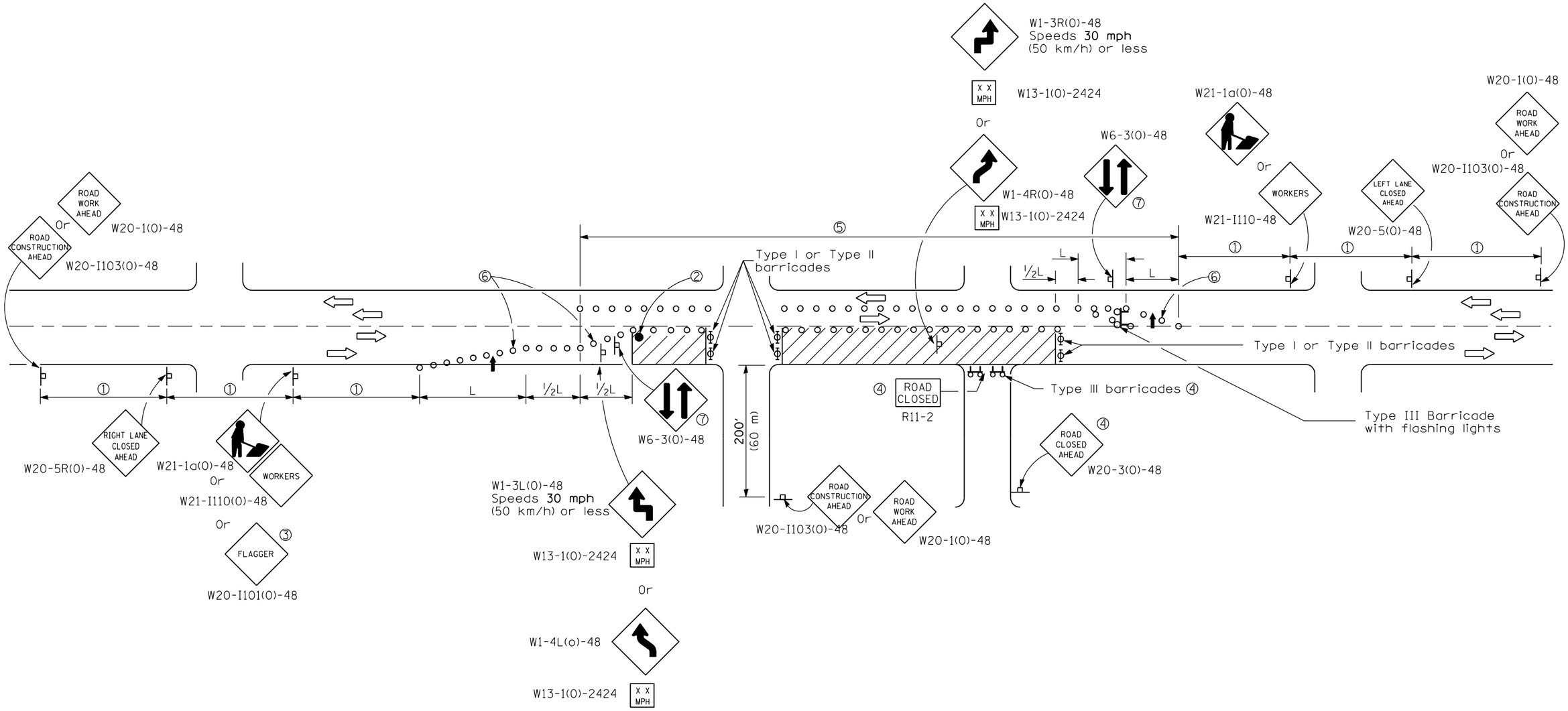

Illinois Department of Transportation

APPROVED January 1, 2009
ENGINEER OF OPERATIONS

APPROVED January 1, 2009
ENGINEER OF DESIGN AND ENVIRONMENT

ISSUED 1-1-97

URBAN LANE CLOSURE, MULTILANE, 2W WITH MOUNTABLE MEDIAN
(Sheet 2 of 2)

STANDARD 701606-06

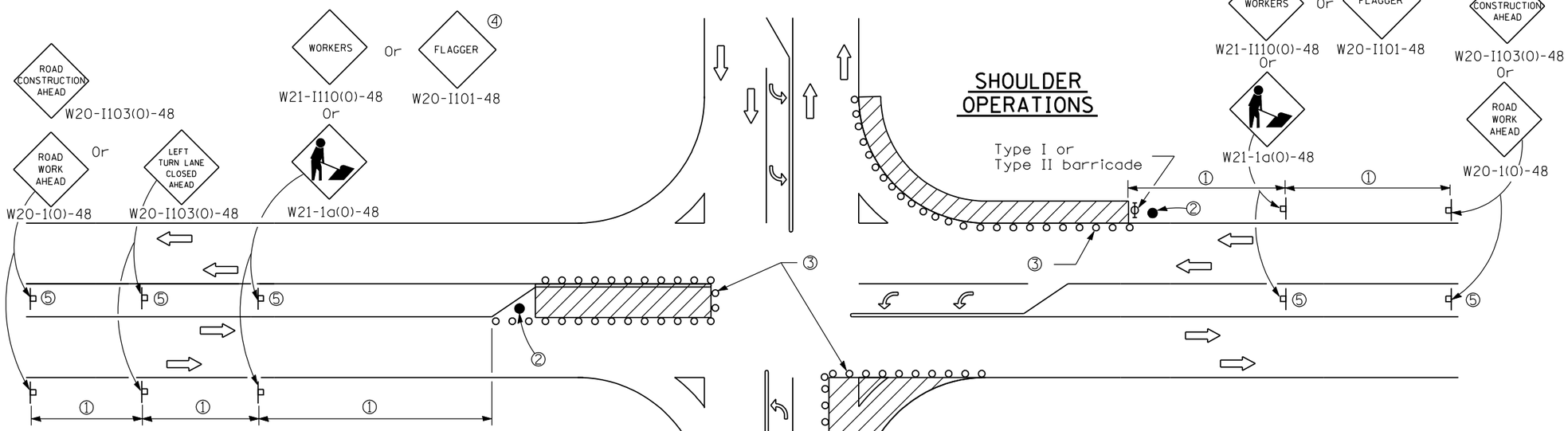

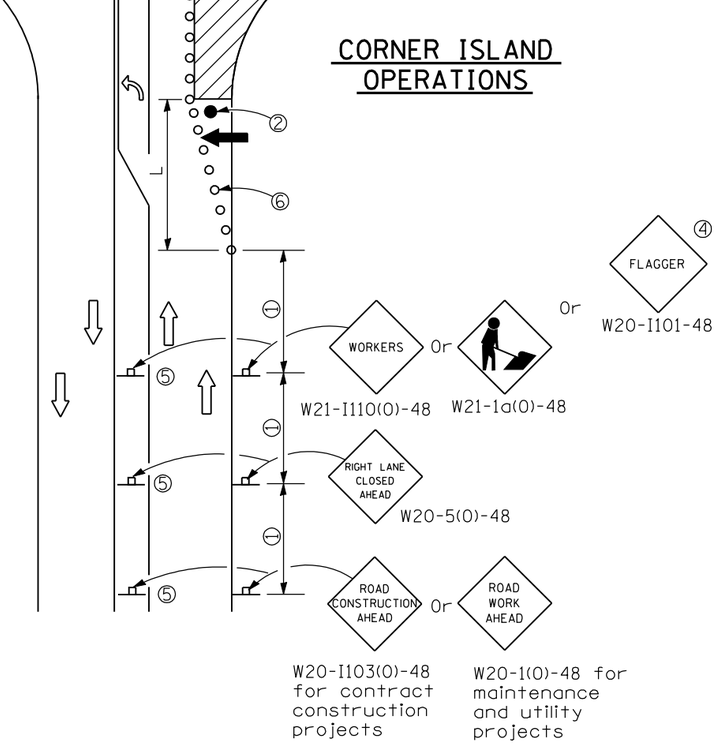

SIGN SPACING	
Posted Speed	Sign Spacing
55	500′ (150 m)
50-45	350′ (100 m)
<45	200′ (60 m)

① Refer to SIGN SPACING TABLE for distance.

② Required for speed > 40 mph.

③ Cones at 25′ (8 m) centers for 250′ (75 m). Additional cones may be placed at 50′ (15 m) centers. When drums or Type I or Type II barricades are used, the interval between devices may be doubled.

④ Use flagger sign only when flagger is present.

⑤ Omit this sign when median is less than 10′ (3 m) or for bi-dirctional turn lanes.

⑥ Cones, drums or barricades at 20′ (6 m) centers in taper.

SYMBOLS

- Work area
- Cone, drum or barricade
- Sign on portable or permanent support
- Arrow board
- Barricade or drum with flashing light
- Flagger with traffic control sign

GENERAL NOTES

This Standard is used where at anytime, day or night, any vehicle, equipment, workers or their activities encroach on the pavement during shoulder operations or where construction requires lane closures in an urban area.

Calculate L as follows:

SPEED LIMIT	FORMULAS	
	English	(Metric)
40 mph (70 km/h) or less:	$L = \frac{WS^2}{60}$	$L = \frac{WS^2}{150}$
45 mph (80 kh/h) or greater:	$L = (W)(S)$	$L = 0.65(W)(S)$

W = Width of offset in feet (meters).

S = Normal posted speed mph (km/h).

All dimensions are in inches (millimeters) unless otherwise shown.

Illinois Department of Transportation

APPROVED January 1, 2009
ENGINEER OF OPERATIONS
APPROVED January 1, 2009
ENGINEER OF DESIGN AND ENVIRONMENT

ISSUED 1-1-97

DATE	REVISIONS
1-1-09	Switched units to
	English (metric).
	Corrected sign No.'s.
1-1-08	Added note ⑥

URBAN LANE CLOSURE, MULTILANE INTERSECTION

STANDARD 701701-06

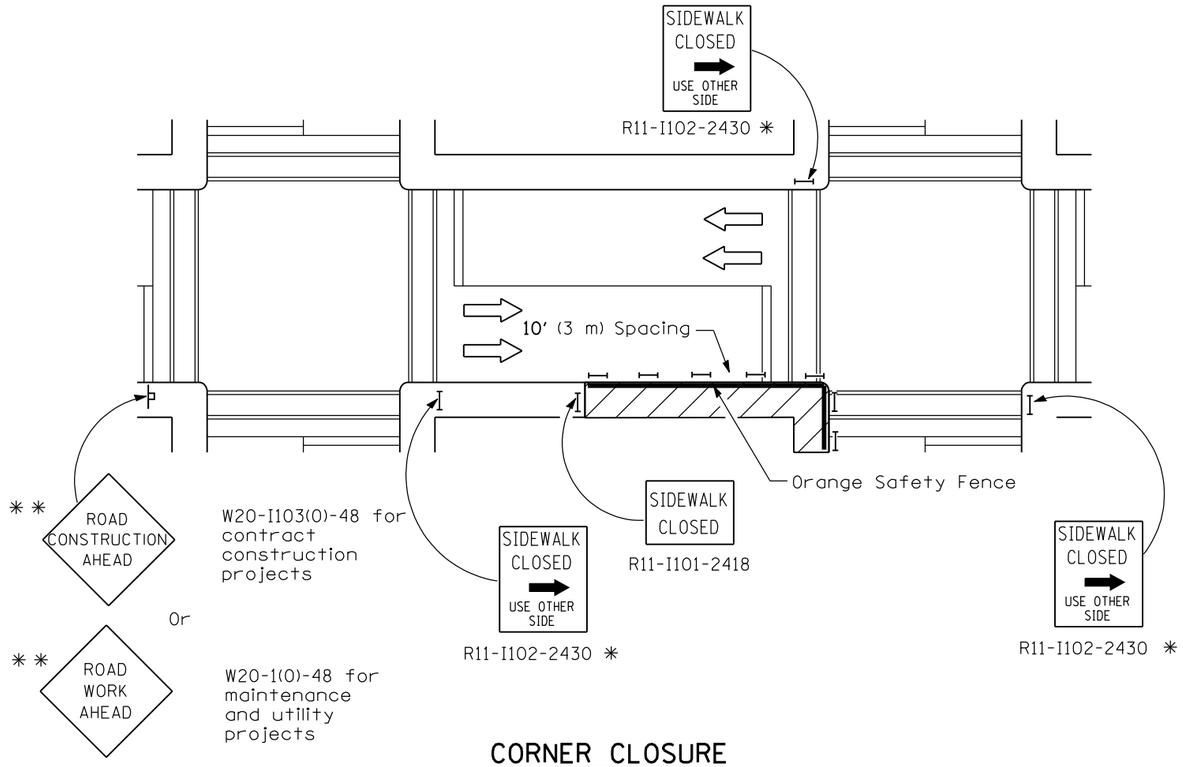

CORNER CLOSURE

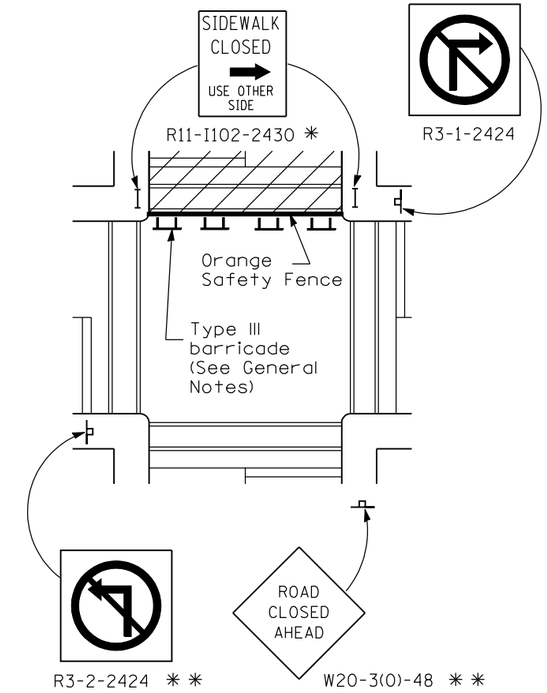

CROSSWALK CLOSURE

SYMBOLS

- Work area
- Sign on portable or permanent support
- Barricade or drum
- Cone, drum or barricade
- Type III barricade

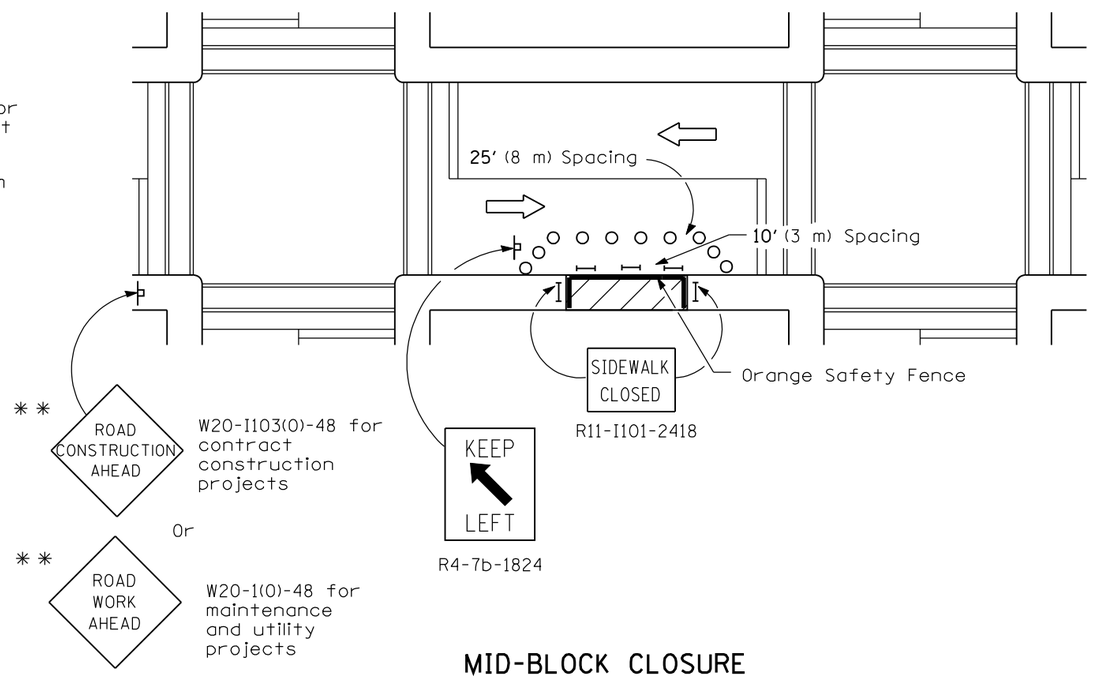

MID-BLOCK CLOSURE

* May be used when applicable

R11-I102-2430

** Omit whenever duplicated by road work traffic control.

GENERAL NOTES

Where, at any time, pedestrian traffic must be rerouted due to work being performed.

The SIDEWALK CLOSED / USE OTHER SIDE sign shall be placed at the nearest crosswalk or intersection to each end of the closure. Where the closure occurs at a corner, the signs shall be erected on the corners across the street from the closure. The SIDEWALK CLOSED signs shall be used at the ends of the actual closures.

Type III barricades and R11-2-4830 signs shall be positioned as shown in "ROAD CLOSED TO ALL TRAFFIC" detail on Standard 709001.

All dimensions are in inches (millimeters) unless otherwise shown.

Illinois Department of Transportation

APPROVED January 1, 2009
ENGINEER OF OPERATIONS
APPROVED January 1, 2009
ENGINEER OF DESIGN AND ENVIRONMENT

ISSUED 1-1-97

DATE	REVISIONS
1-1-09	Switched units to
	English (metric),
	702001 to 709001.
1-1-00	Revised Standard Title
	and KEEP LEFT sign
	number.

LANE CLOSURE MULTILANE 1W OR 2W CROSSWALK OR SIDEWALK CLOSURE

STANDARD 701801-04

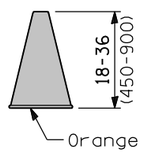

CONE

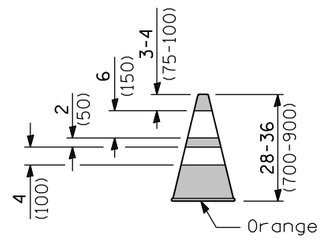

REFLECTORIZED CONE

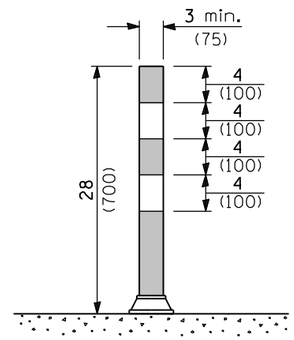

FLEXIBLE DELINEATOR

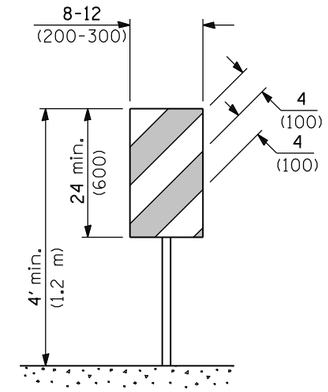

VERTICAL PANEL

POST MOUNTED

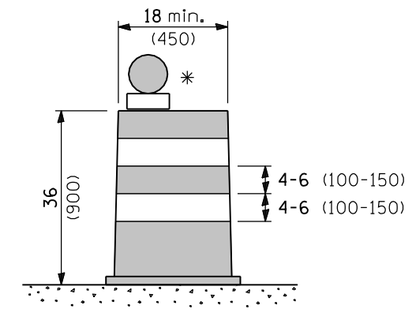

DRUM

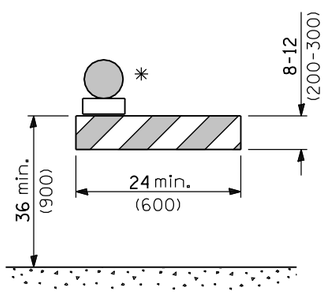

TYPE I BARRICADE

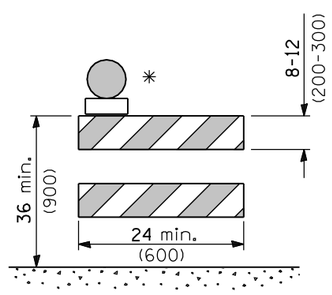

TYPE II BARRICADE

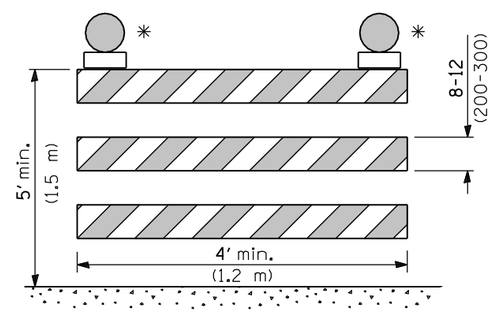

TYPE III BARRICADE

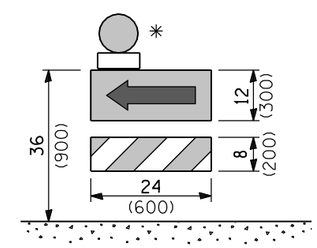

DIRECTION INDICATOR BARRICADE

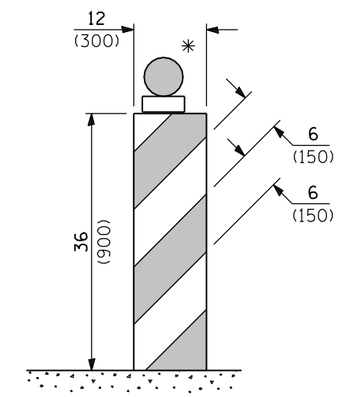

VERTICAL BARRICADE

* Warning lights (if required)

GENERAL NOTES

All heights shown shall be measured above the pavement surface.

All dimensions are in inches (millimeters) unless otherwise shown.

Illinois Department of Transportation

APPROVED January 1, 2009
ENGINEER OF OPERATIONS

APPROVED January 1, 2009
ENGINEER OF DESIGN AND ENVIRONMENT

ISSUED 1-1-97

DATE	REVISIONS
1-1-09	Switched units to
	English (metric). Omitted
	light on vertical panel.
1-1-08	Renumbered Standard
	702001-06. Rev. note for
	temp. signs on Sheet 2.

TRAFFIC CONTROL DEVICES

(Sheet 1 of 3)

STANDARD 701901-01

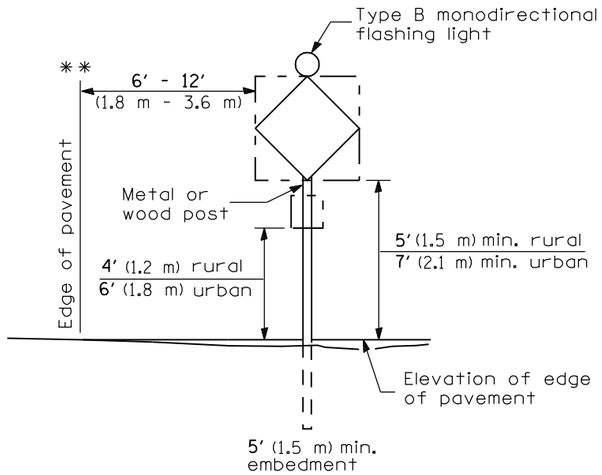

POST MOUNTED SIGNS

** When curb or paved shoulder are present this dimension shall be 24 (600) to the face of curb or 6' (1.8 m) to the outside edge of the paved shoulder.

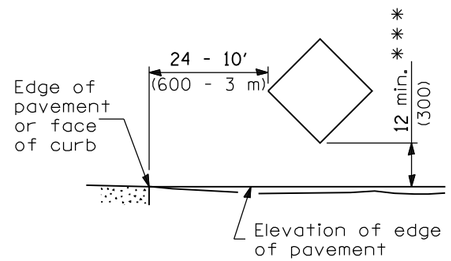

SIGNS ON TEMPORARY SUPPORTS

*** When work operations exceed four days, this dimension shall be 5' (1.5 m) min. If located behind other devices, the height shall be sufficient to be seen by motorists.

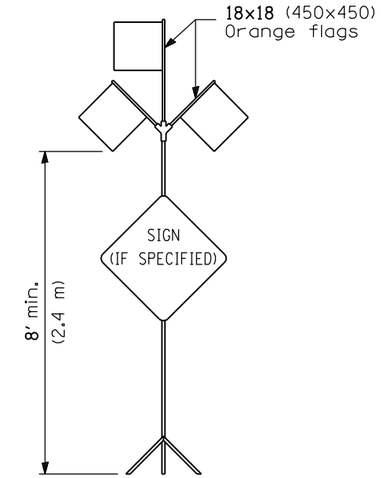

HIGH LEVEL WARNING DEVICE

ROAD CONSTRUCTION NEXT X MILES	END CONSTRUCTION
G20-1(0)-6036	G20-2a(0)-6024

This signing is required for all projects 2 miles (3200 m) or more in length.

ROAD CONSTRUCTION NEXT X MILES sign shall be placed 500' (150 m) in advance of project limits.

END CONSTRUCTION sign shall be erected at the end of the job unless another job is within 2 miles (3200 m).

Dual sign displays shall be utilized on multi-lane highways.

WORK LIMIT SIGNING

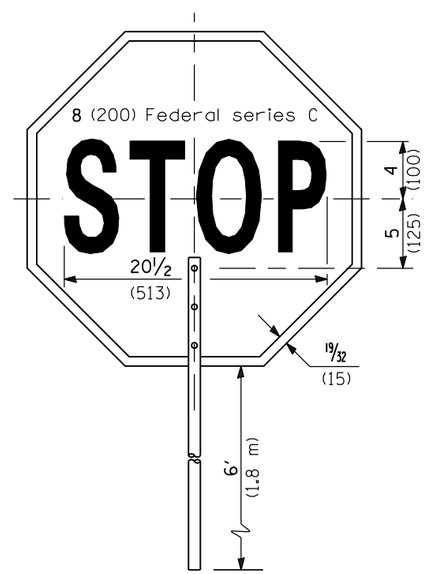

FRONT SIDE

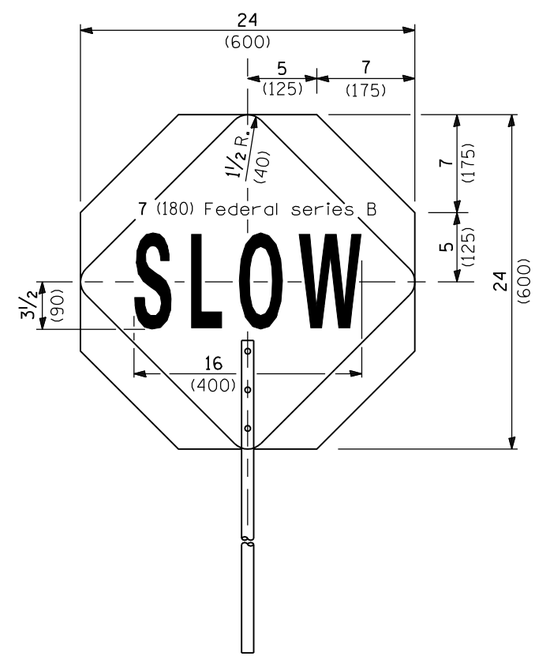

REVERSE SIDE

FLAGGER TRAFFIC CONTROL SIGN

All dimensions are in inches (millimeters) unless otherwise shown.

Illinois Department of Transportation

APPROVED January 1, 2009
ENGINEER OF OPERATIONS

APPROVED January 1, 2009
ENGINEER OF DESIGN AND ENVIRONMENT

ISSUED 1-1-97

TRAFFIC CONTROL DEVICES

(Sheet 2 of 3)

STANDARD 701901-01

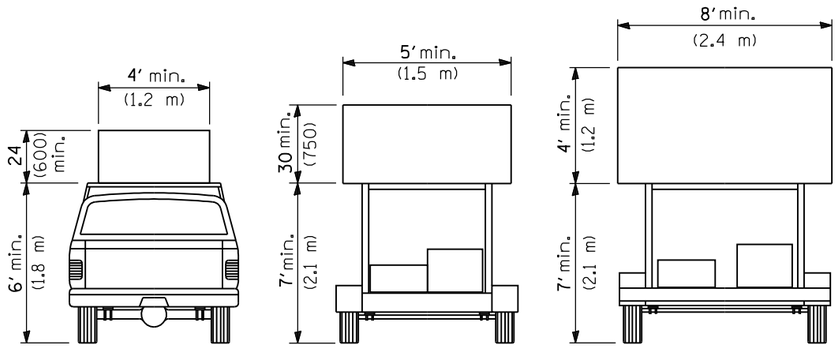

TYPE A
ROOF
MOUNTED

TYPE B
ROOF OR TRAILER
MOUNTED

TYPE C
TRAILER
MOUNTED

ARROW BOARDS

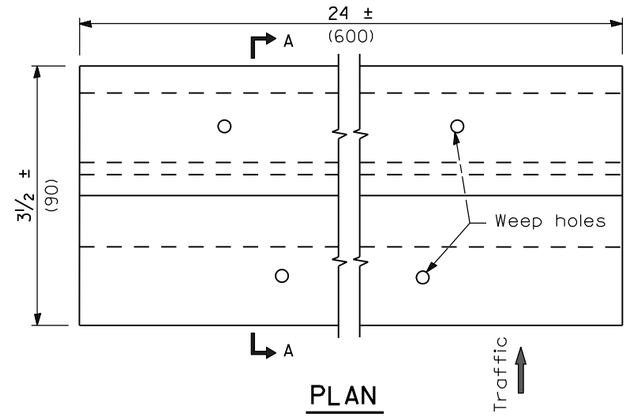

PLAN

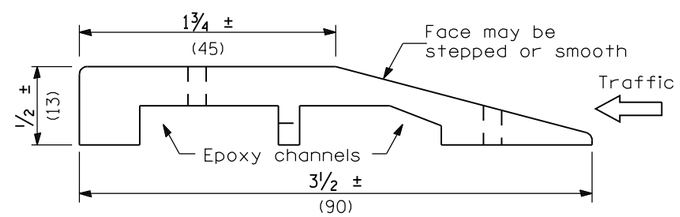

SECTION A-A

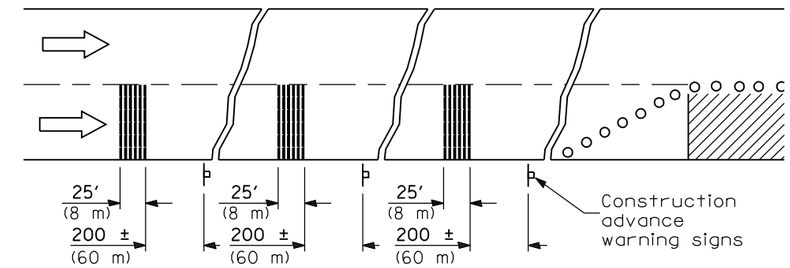

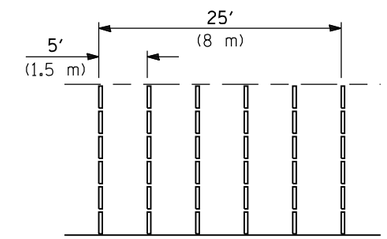

TYPICAL INSTALLATION

TEMPORARY RUMBLE STRIPS

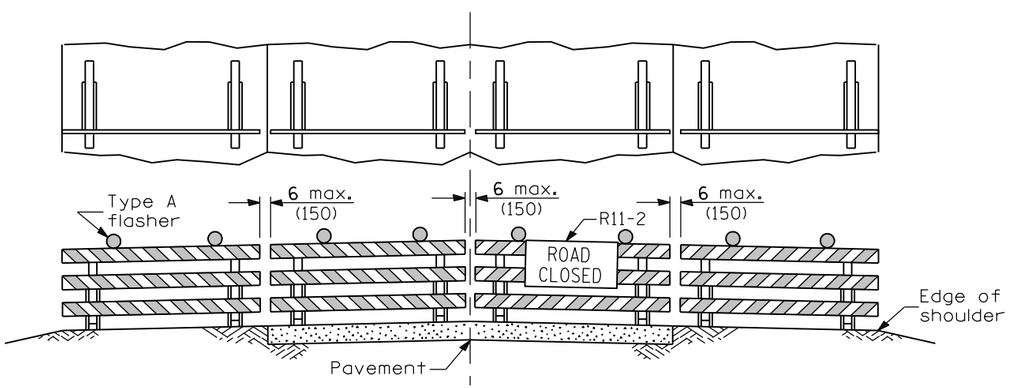

ROAD CLOSED TO ALL TRAFFIC

Reflectorized striping may be omitted on the back side of the barricades. If a Type III barricade with an attached sign panel which meets NCHRP 350 is not available, the sign may be mounted on an NCHRP 350 temporary sign support directly in front of the barricade.

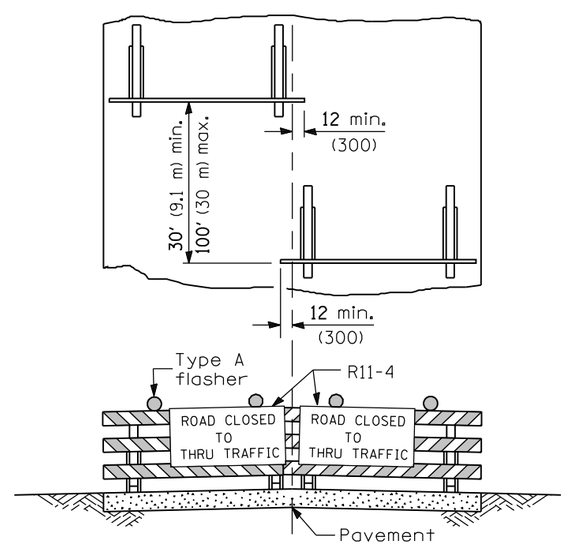

ROAD CLOSED TO THRU TRAFFIC

Reflectorized striping shall appear on both sides of the barricades. If a Type III barricade with an attached sign panel which meets NCHRP 350 is not available, the signs may be mounted on NCHRP 350 temporary sign supports directly in front of the barricade.

TYPICAL APPLICATIONS OF
TYPE III BARRICADES CLOSING A ROAD

All dimensions are in inches (millimeters) unless otherwise shown.

Illinois Department of Transportation

APPROVED January 1, 2009
ENGINEER OF OPERATIONS

APPROVED January 1, 2009
ENGINEER OF DESIGN AND ENVIRONMENT

ISSUED 1-1-97

TRAFFIC CONTROL
DEVICES

(Sheet 3 of 3)

STANDARD 701901-01

F SHAPE DESIGN

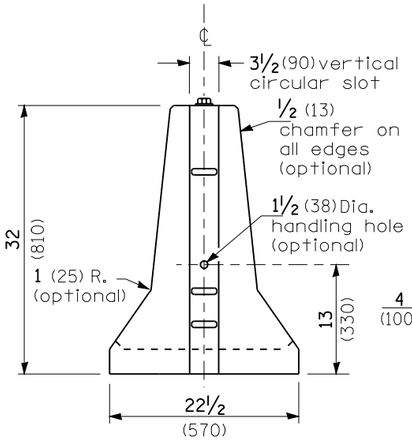

END VIEW
(Showing lifting slot)

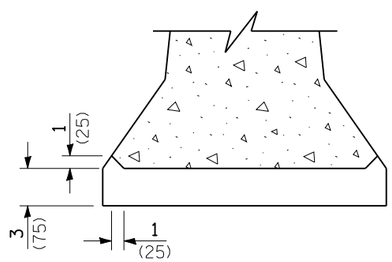

SECTION A-A
LIFTING SLOT

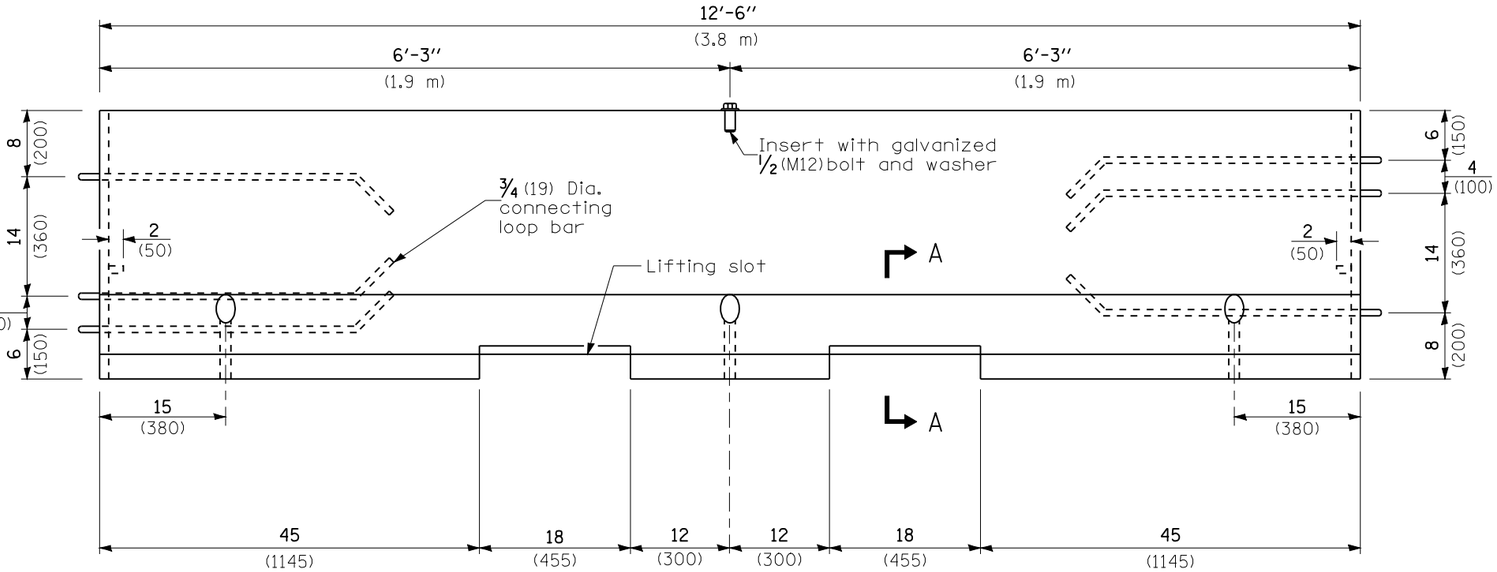

ELEVATION
(Showing connecting loop bars and vertical panel bolt/insert)

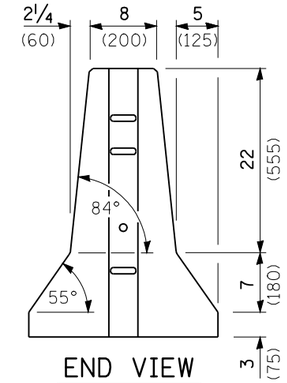

END VIEW

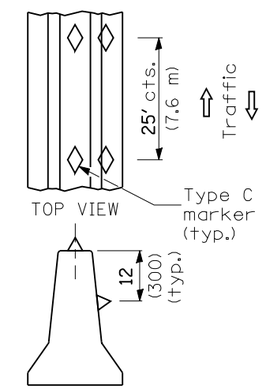

BARRIER WALL MARKERS

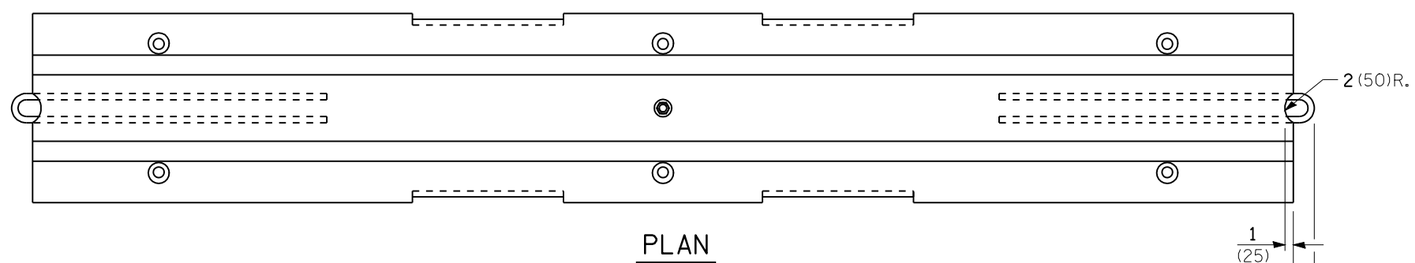

PLAN

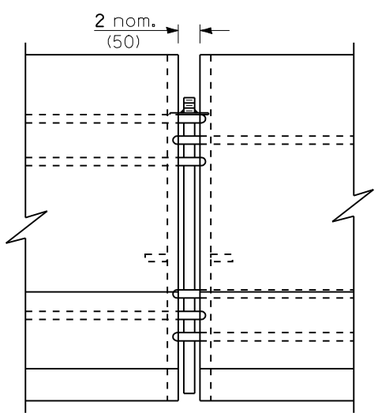

CONNECTING DETAIL

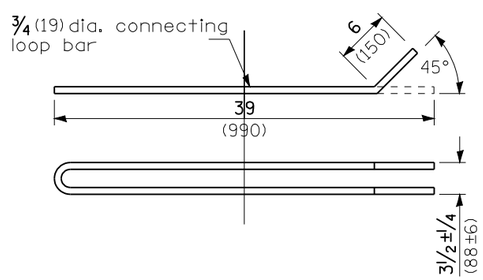

CONNECTING LOOP BAR

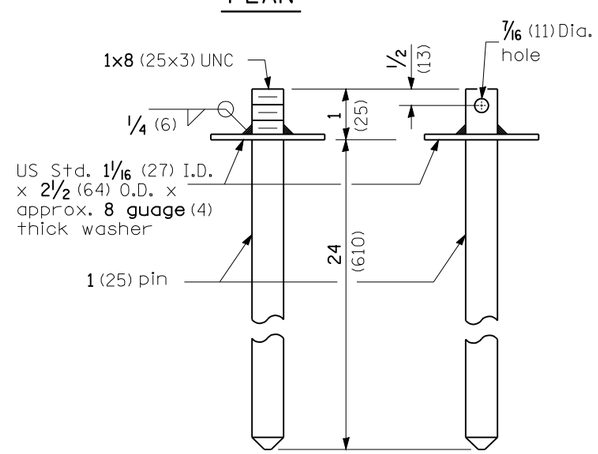

ALTERNATE CONNECTING AND ANCHOR PINS
(End may be beveled ¼ (6) max.)

GENERAL NOTES

Each F shape barrier shall be clearly marked with "ILLINOIS F SHAPE", the Producer's mark and the date of manufacture. The markings shall be indented on the barrier or painted thereon with waterproof paint/ink.

The insert for the ½ (M12) bolt shall be capable of 3,000 lb (13 kN) pull-out strength.

When barrier separates opposing flows of traffic, markers shall be on both sides of barrier.

See Standard 635011 for dimensions of Type C marker.

All dimensions are in inches (millimeters) unless otherwise shown.

Illinois Department of Transportation

PASSED January 1, 2010
ENGINEER OF POLICY AND PROCEDURES
APPROVED January 1, 2010
ENGINEER OF DESIGN AND ENVIRONMENT
ISSUED 10-1-02

DATE	REVISIONS
1-1-10	Revised General Notes.
1-1-09	Chg. s2 bar to No. 6
	(No. 19), units to Eng.
	(met.). Rev. Gen. Notes.

TEMPORARY CONCRETE BARRIER

(Sheet 1 of 2)

STANDARD 704001-06

F SHAPE DESIGN

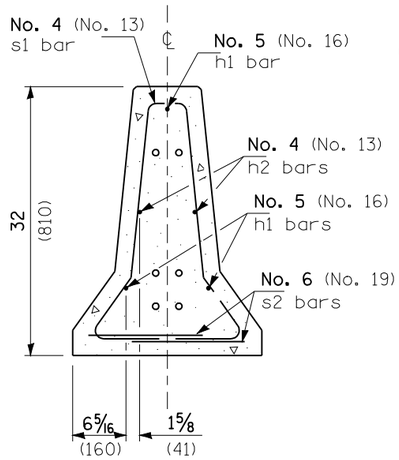

SECTION C-C

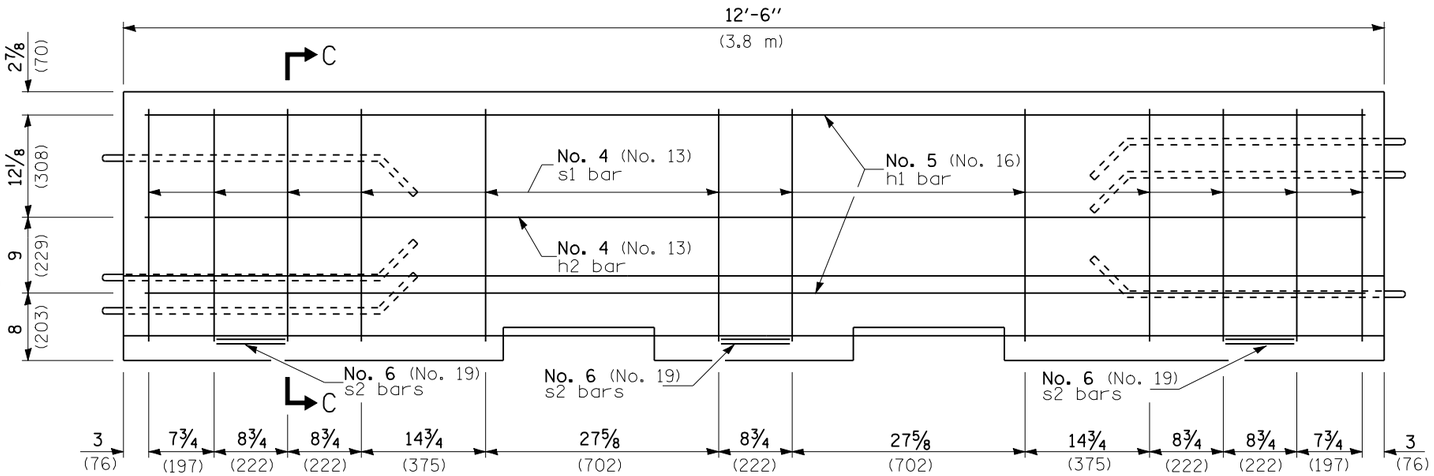

ELEVATION
(Reinforcement)

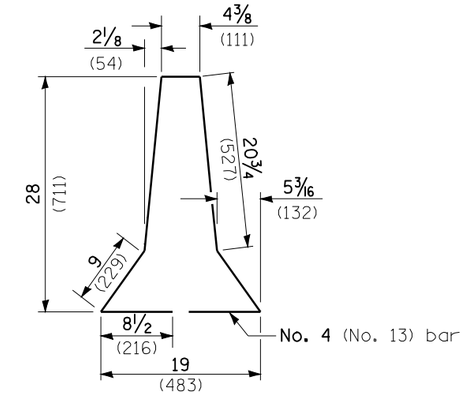

s1 BAR

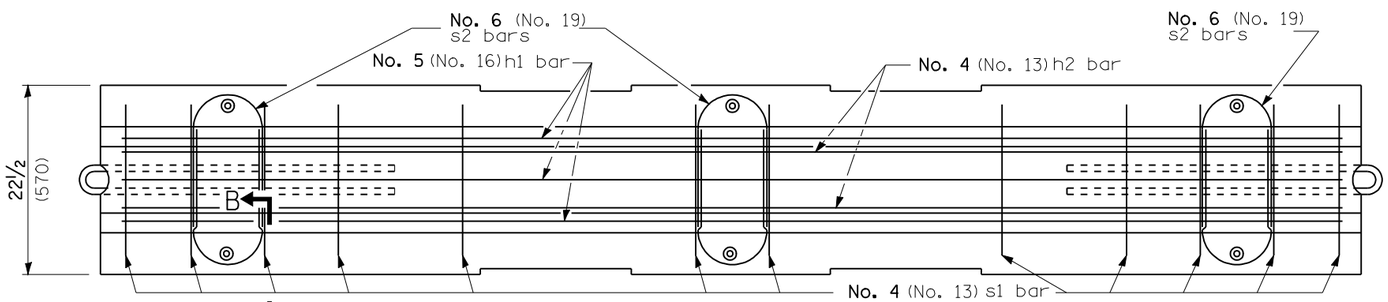

PLAN

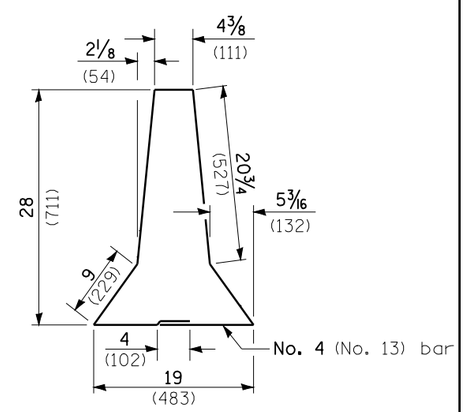

ALTERNATE s1 BAR

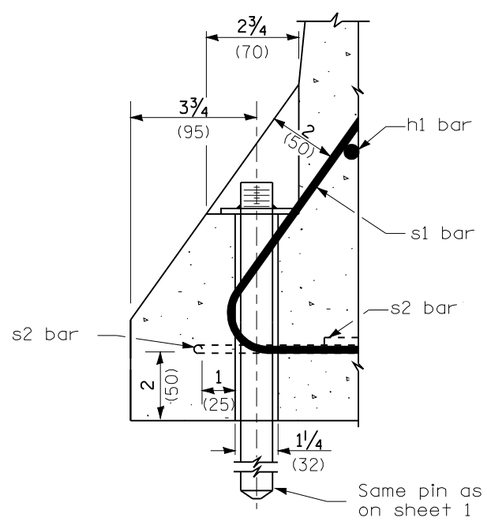

SECTION B-B
ANCHORING DETAIL

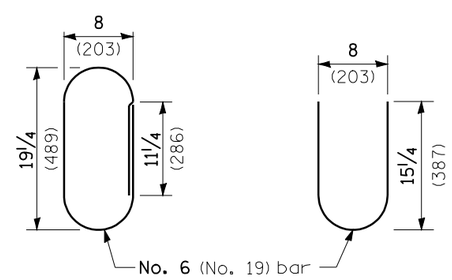

ALTERNATE s2 BARS

Illinois Department of Transportation

PASSED January 1, 2010
ENGINEER OF POLICY AND PROCEDURES
APPROVED January 1, 2010
ENGINEER OF DESIGN AND ENVIRONMENT

ISSUED 10-1-02

TEMPORARY CONCRETE BARRIER
(Sheet 2 of 2)

STANDARD 704001-06

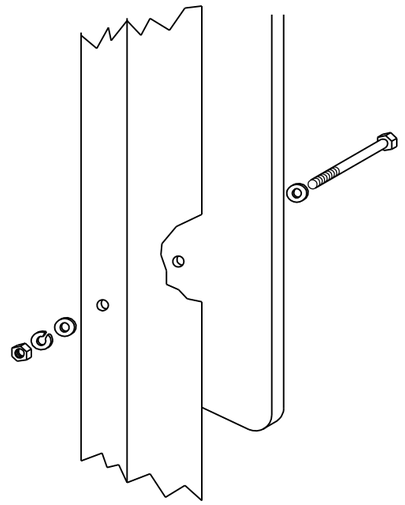

Sign panel 36 (900) wide or less

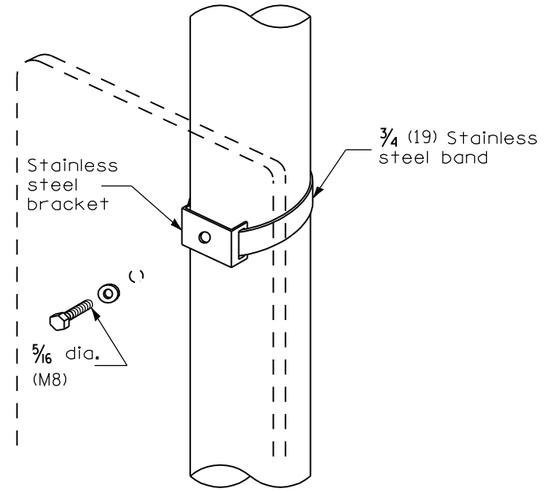

Sign panel 36 (900) wide or less

Section modulus (minimum)	Axis A	Axis B
Steel	0.050 in.^{3} (819 mm^3)	0.105 in.^{3} (1720 mm^3)
Aluminum	0.150 in.^{3} (2458 mm^3)	0.315 in.^{3} (5162 mm^3)

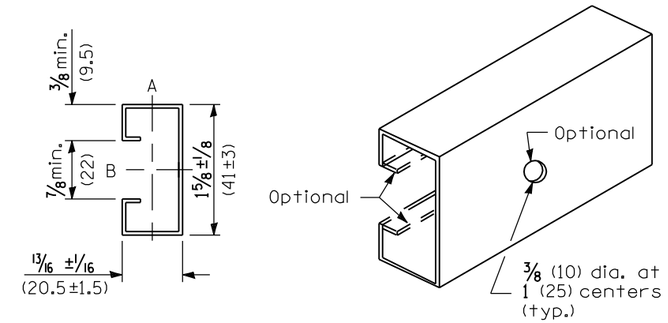

SUPPORTING CHANNEL DETAILS

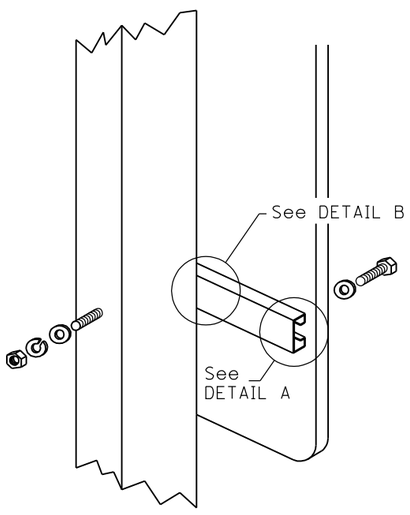

Sign panel over 36 (900) wide

WOOD OR TELESCOPING STEEL POSTS

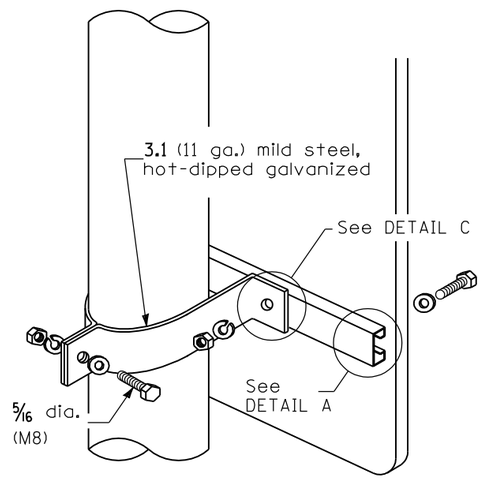

Sign panel over 36 (900) wide

LIGHT OR SIGNAL STANDARDS

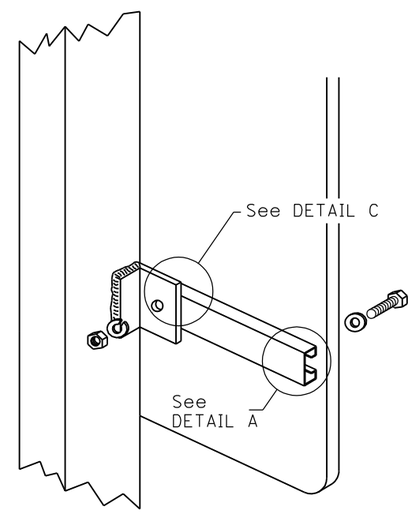

BREAKAWAY STEEL TUBING POSTS

(All sign panel sizes)

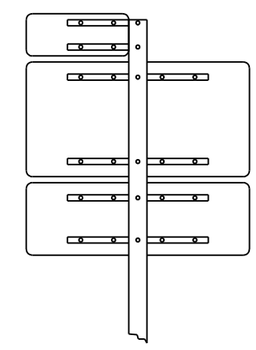

ROUTE MARKER ASSEMBLY

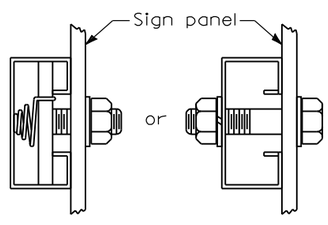

DETAIL A

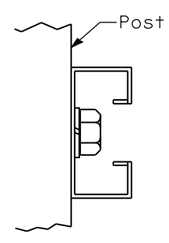

DETAIL B

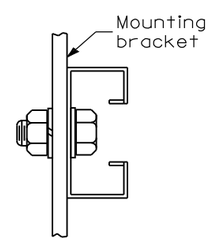

DETAIL C

All dimensions are in inches (millimeters) unless otherwise shown.

Illinois Department of Transportation

APPROVED January 1, 2009
ENGINEER OF OPERATIONS

APPROVED January 1, 2009
ENGINEER OF DESIGN AND ENVIRONMENT

ISSUED 1-1-97

DATE	REVISIONS
1-1-09	Switched units to English (metric).
1-1-97	Renum. Standard 2319-6.

SIGN PANEL MOUNTING DETAILS

STANDARD 720001-01

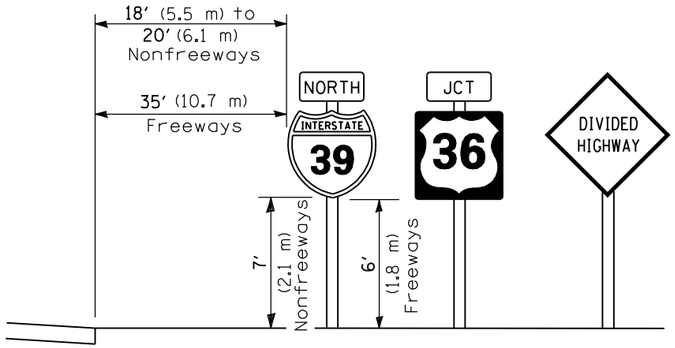

MULTILANE HIGHWAYS

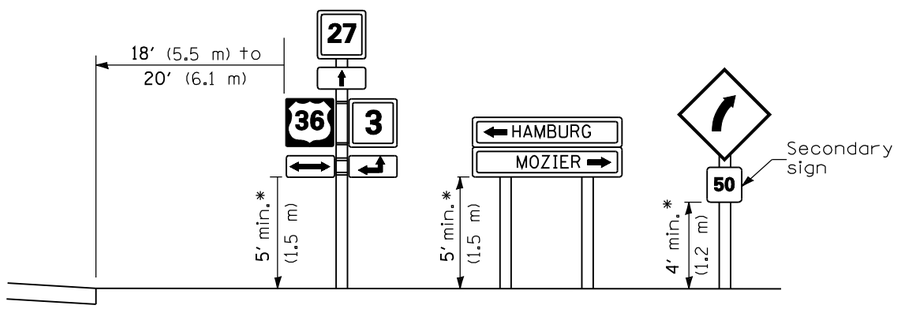

* In any area where parking is likely to occur or where there are obstructions to view or where signs are located over sidewalks, the height shall be at least 7′ (2.1 m).

TWO LANE RURAL HIGHWAYS

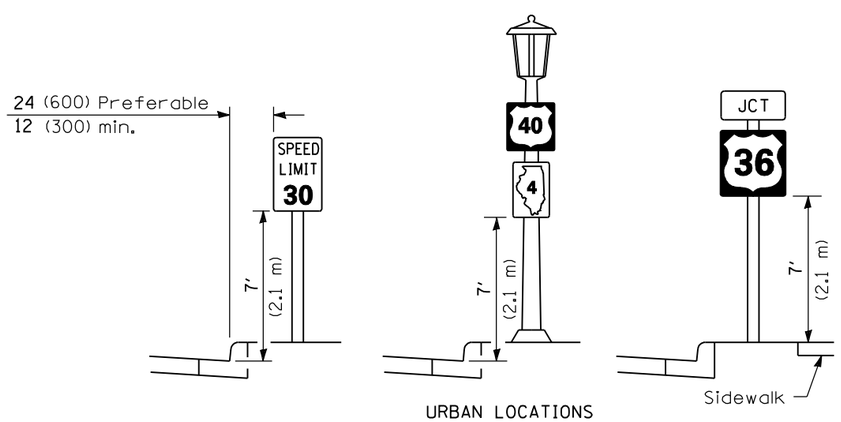

URBAN LOCATIONS

TYPICAL INSTALLATIONS

Signs in any area shall be erected to a uniform height above the edge of the pavement.

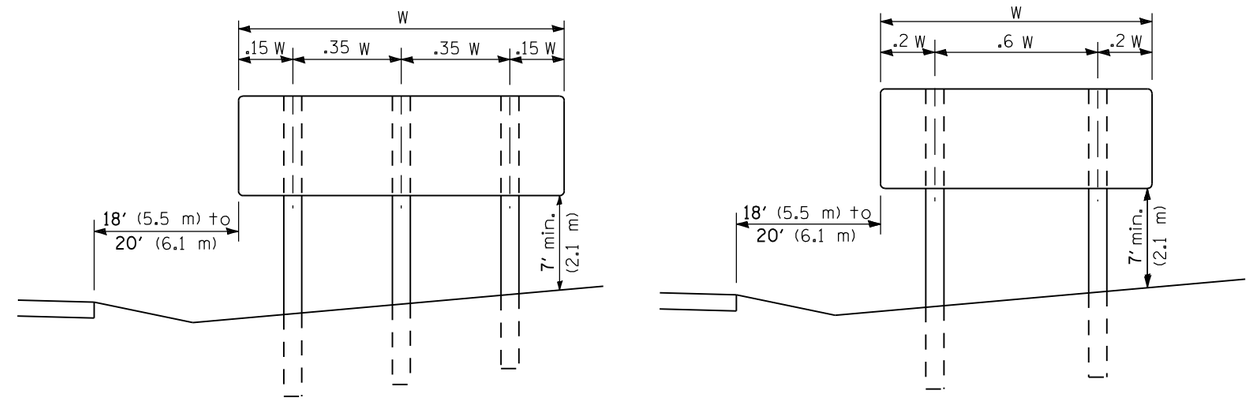

POST SPACING FOR NON-FREEWAY SIGN PANELS

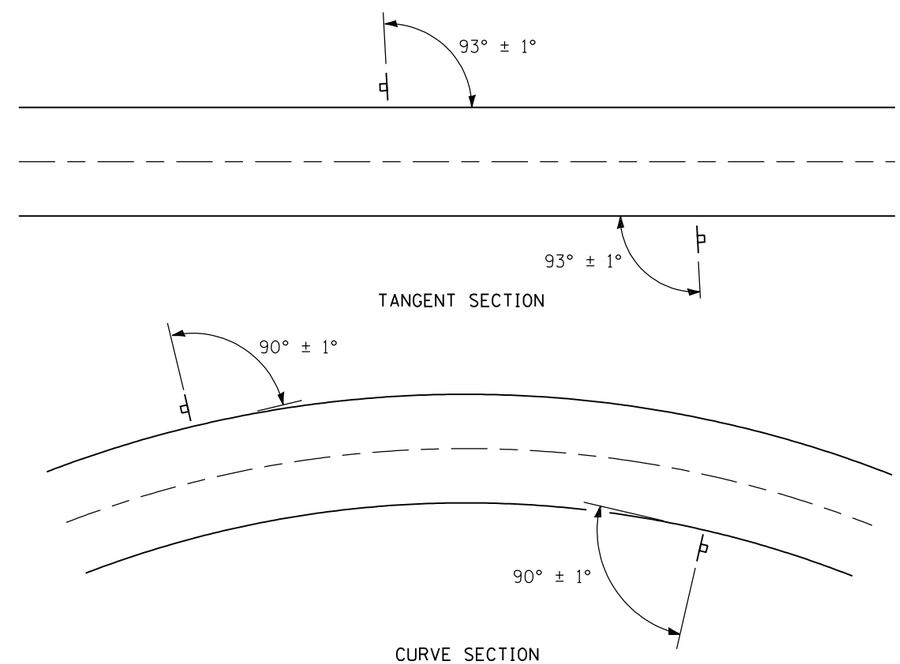

GROUND MOUNT SIGN POSITIONING

All dimensions are in inches (millimeters) unless otherwise shown.

Illinois Department of Transportation

APPROVED January 1, 2009
ENGINEER OF OPERATIONS

APPROVED January 1, 2009
ENGINEER OF DESIGN AND ENVIRONMENT

ISSUED 1-1-97

DATE	REVISIONS
1-1-09	Switched units to English (metric).
1-1-07	Deleted sheet 2. Telescoping steel post and base are new Stds.

SIGN PANEL ERECTION DETAILS

STANDARD 720006–02

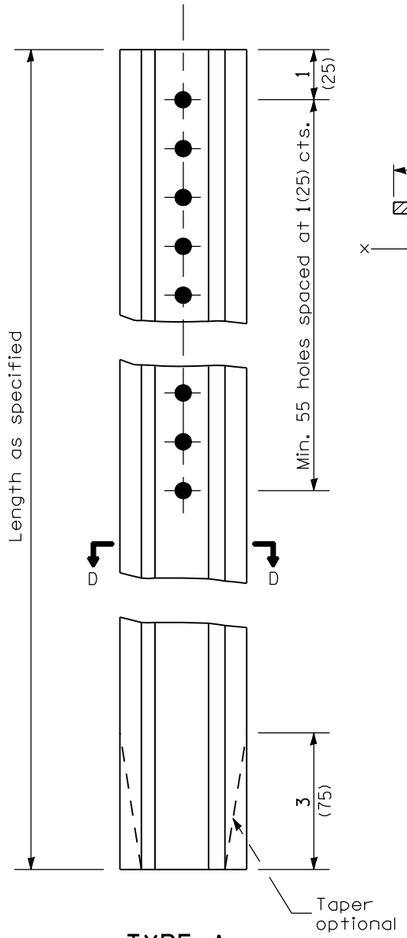

TYPE A

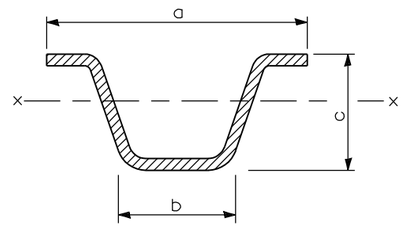

SECTION D-D

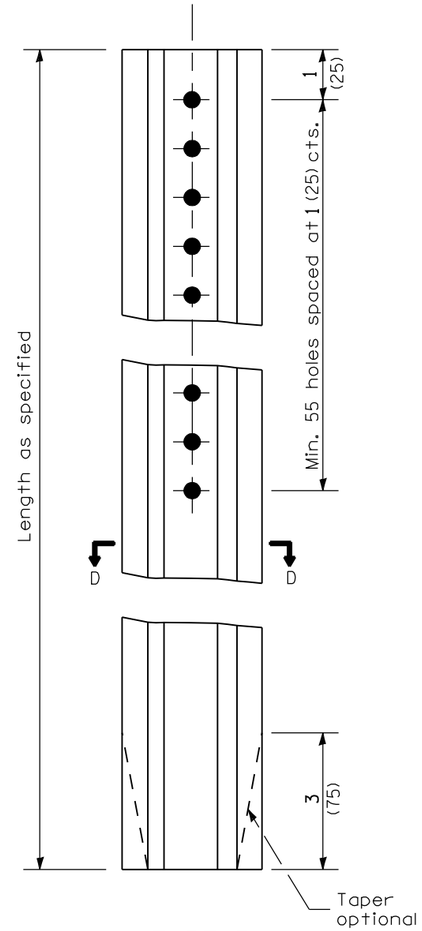

TYPE B

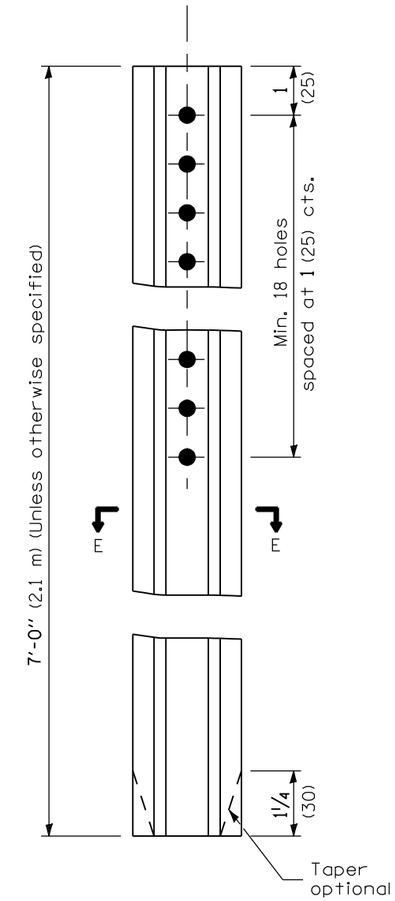

TYPE C

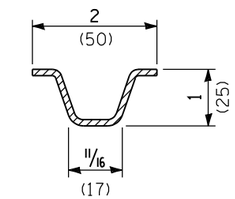

SECTION E-E

Steel - 1.12 lbs./ft. (1.67 kg/m)

		a	b	c	S_{x-x} in.^{3} (mm^3)	lbs./ft. (kg/m)
TYPE A	Steel	3 1/16 (78)	1 1/4 (32)	1 7/16 (37)	0.223 (3,654)	2.00 (2.98)
	Aluminum	3 1/2 (89)	1 5/8 (41)	1 7/8 (48)	0.435 (7,128)	0.90 (1.34)
TYPE B	Steel	3 3/16 (81)	1 1/4 (32)	1 1/2 (38)	0.341 (5,588)	3.00 (4.46)
	Aluminum	4 5/8 (118)	2 1/4 (57)	2 3/8 (60)	0.888 (14,552)	1.30 (1.93)

GENERAL NOTES

Dimensions shown for cross sections are minimum.

All holes are 3/8 (10).

S_{x-x} is the minimum section modulus about the x-x axis of the post as shown. For posts in which holes are punched or drilled for more than half their length, S_{x-x} shall be computed for the net section.

All dimensions are in inches (millimeters) unless otherwise shown.

Illinois Department of Transportation

PASSED January 1, 2009
ENGINEER OF POLICY AND PROCEDURES
APPROVED January 1, 2009
ENGINEER OF DESIGN AND ENVIRONMENT

ISSUED 1-1-97

DATE	REVISIONS
1-1-09	Switched units to English (metric).
1-1-97	Renum. Standard 2350-4.

METAL POSTS FOR SIGNS, MARKERS & DELINEATORS

STANDARD 720011-01

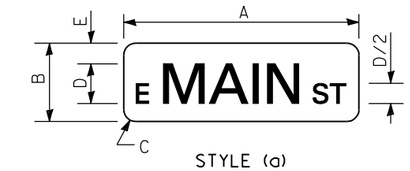

STYLE (a)

STYLE (b)

STYLE (c)

STYLE (d)

STYLE (e)

When road classification only is on the second line, it should not be abbreviated.

STYLE (f)

TYPICAL SIGN STYLES

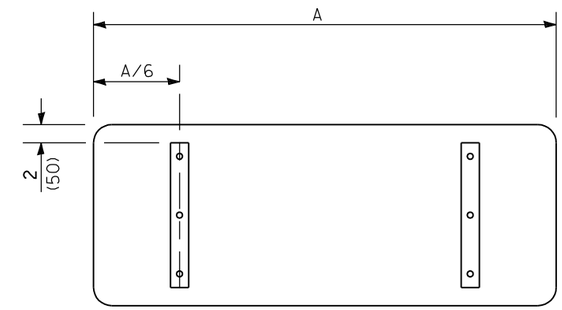

SUPPORTING CHANNELS

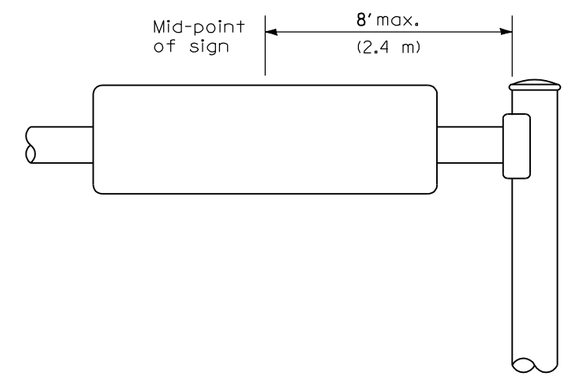

MOUNTING LOCATION

SIGN STYLE	DIMENSIONS A	B	C	D	E	F	G	H	LETTER SIZE UPPER CASE PRIMARY 1	2	*	UC / LC PRIMARY 1	2	*	BORDER
a,b,d	Var.	18 (450)	1½ (40)	6 (150)	6 (150)	- -	- -	- -	6D (150D)	- -	- -	6/4½ (150/115)	- -	- -	0.6 (15)
c,e	Var.	24 (600)	1½ (40)	6 (150)	- -	- -	7 (175)	4 (100)	6D (150D)	- -	3D (75D)	6/4½ (150/115)	- -	3D (75D)	0.6 (15)
a,b,d	Var.	24 (600)	1½ (40)	8 (200)	8 (200)	- -	- -	- -	8D (200D)	- -	- -	8/6 (200/150)	- -	- -	0.6 (15)
f	Var.	30 (750)	2¼ (60)	6 (150)	6½ (165)	5 (125)	- -	- -	6D (150D)	6D (150D)	- -	6/4½ (150/115)	6/4½ (150/115)	- -	0.8 (20)
c,e	Var.	30 (750)	2¼ (60)	8 (200)	- -	- -	9 (230)	4½ (115)	8D (200D)	- -	4D (100D)	8/6 (200/150)	- -	4D (100D)	0.8 (20)
a,b,d	Var.	30 (750)	2½ (60)	10 (250)	10 (250)	10 (250)	- -	- -	10D (250D)	- -	- -	10/7½ (250/190)	- -	- -	0.8 (20)
c,e	Var.	36 (900)	2¼ (60)	10 (250)	- -	- -	11 (280)	5 (125)	10D (250D)	- -	5D (125D)	10/7½ (250/190)	- -	5D (125D)	0.8 (20)
f	Var.	40 (1000)	3 (75)	8 (200)	8½ (215)	7 (120)	- -	- -	8D (200D)	8D (200D)	- -	8/6 (200/150)	8/6 (200/150)	- -	0.8 (20)
f	Var.	48 (1200)	3 (75)	10 (250)	10 (250)	8 (200)	- -	- -	10D (250D)	10D (250D)	- -	10/7½ (250/190)	10/7½ (250/190)	- -	0.8 (20)

* Supplemental Messages

GENERAL NOTES

All signs shall have a white reflectorized legend and border on a green reflectorized background.

The sign panels shall be mounted as shown on Standard 720001 or as specified in the plans.

All dimensions are in inches (millimeters) unless otherwise shown.

Illinois Department of Transportation

APPROVED January 1, 2009
ENGINEER OF OPERATIONS

APPROVED January 1, 2009
ENGINEER OF DESIGN AND ENVIRONMENT

ISSUED 1-1-97

DATE	REVISIONS
1-1-09	Switched units to English (metric).
1-1-04	Revised mounting location.

MAST ARM MOUNTED STREET NAME SIGNS

STANDARD 720016-02

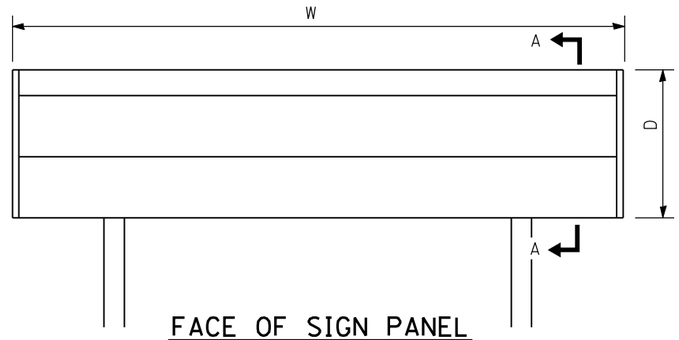

FACE OF SIGN PANEL

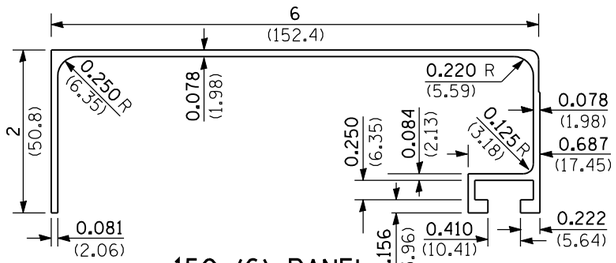

150 (6) PANEL

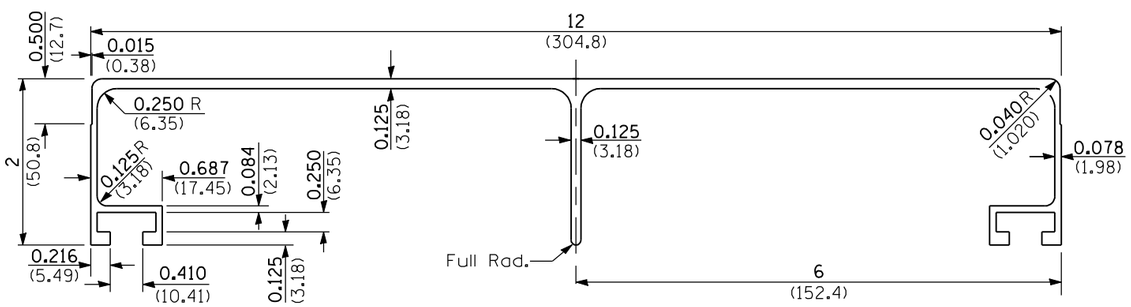

TYPE B SIGN PANEL

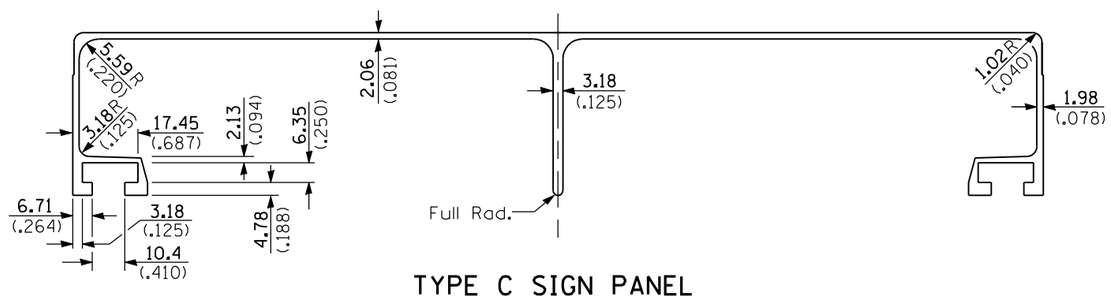

TYPE C SIGN PANEL

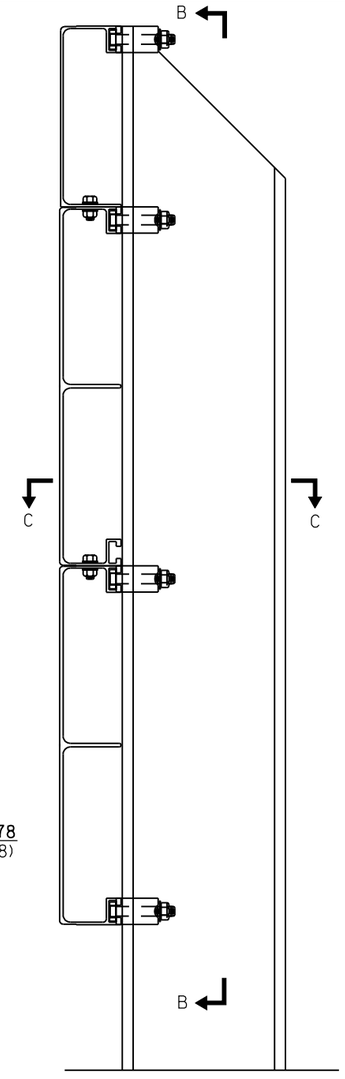

SECTION A-A

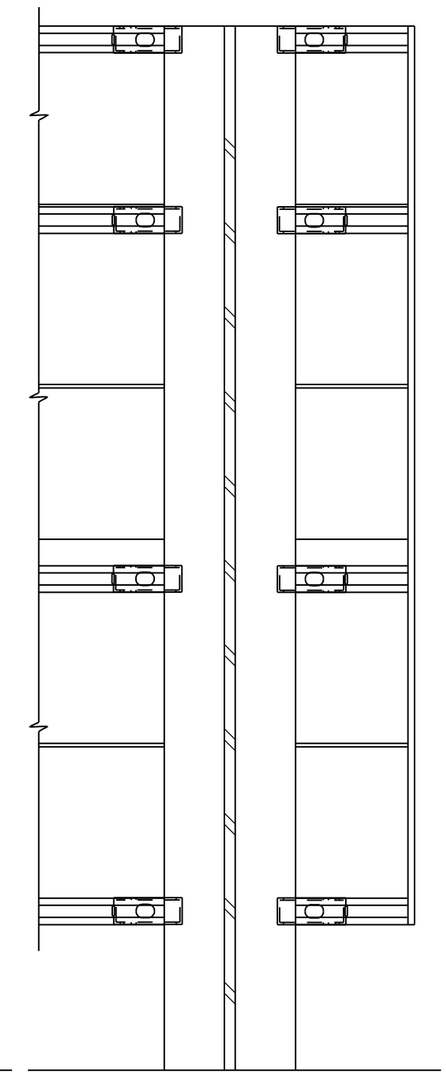

SECTION B-B

(Provide two post clips top and bottom.Alternate at interior panel joints on ground-mounted signs, and provide two clips at all panel joints on over- head mounted signs.)

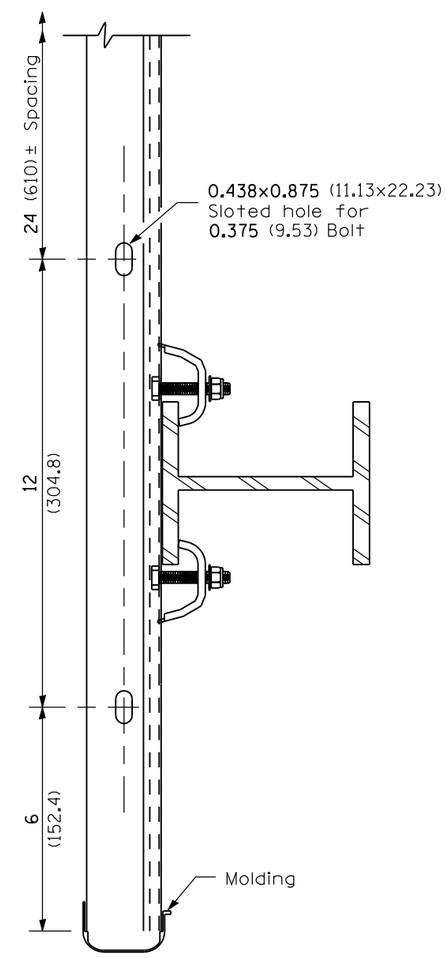

SECTION C-C

(w/o panel bolts)

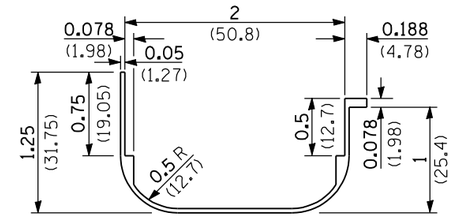

SIGN MOLDING

(Color shall match sign facematerial. To be riveted to sign panel at 24 (600) O.C.)

All dimensions are in inches (millimeters) unless otherwise shown.

Illinois Department of Transportation

APPROVED January 1, 2009
ENGINEER OF OPERATIONS

APPROVED January 1, 2009
ENGINEER OF DESIGN AND ENVIRONMENT

ISSUED 1-1-00

DATE	REVISIONS
1-1-09	Added alumininum clip.
	Switched units to
	English (metric).
1-1-03	Revised stainless steel
	clip design, and
	minor changes.

SIGN PANELS EXTRUDED ALUMINUM TYPE

(Sheet 1 of 2)

STANDARD 720021-02

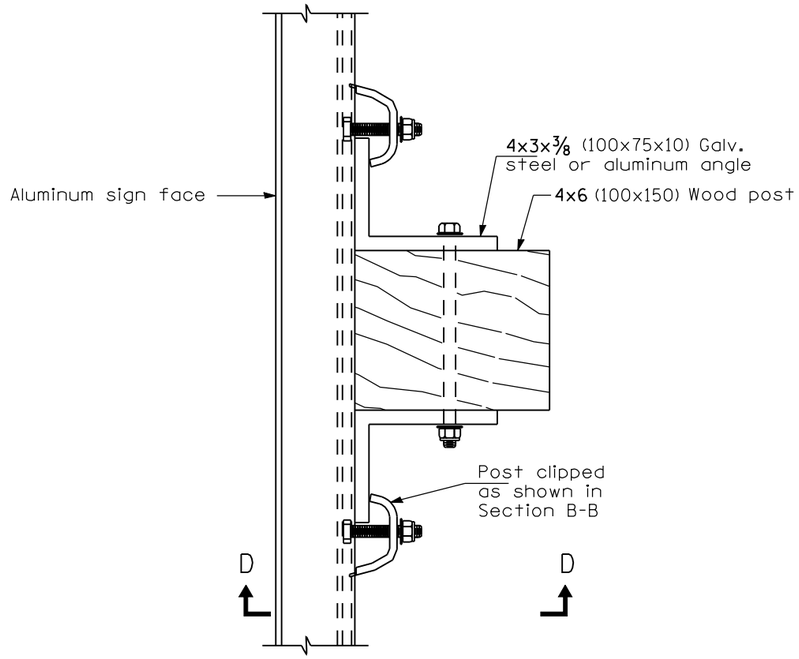

SIGN PANEL ATTACHMENT TO WOOD POST

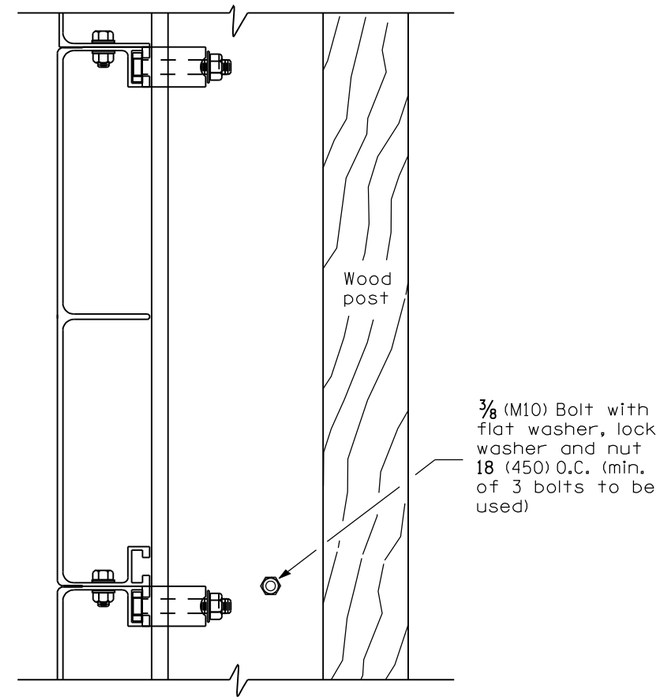

SECTION D-D

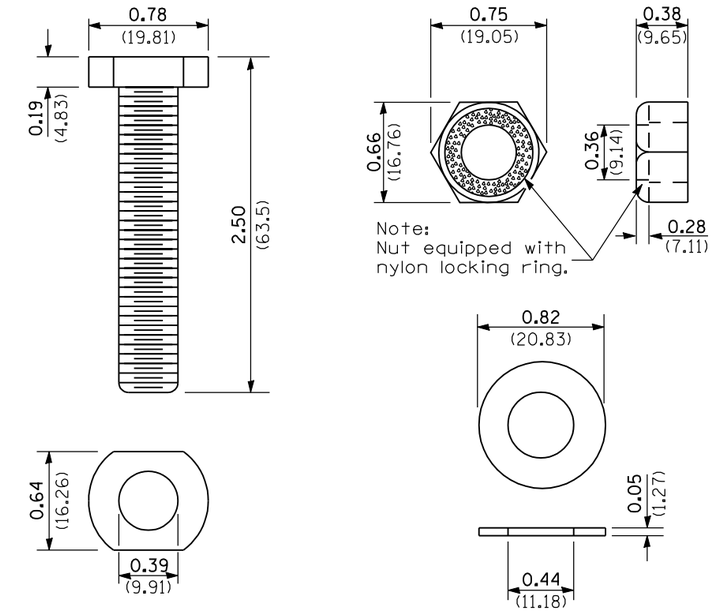

STAINLESS STEEL CLIP NUT, BOLT AND WASHER ASSEMBLY

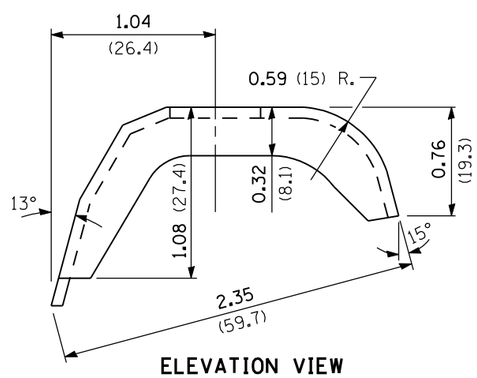

ELEVATION VIEW

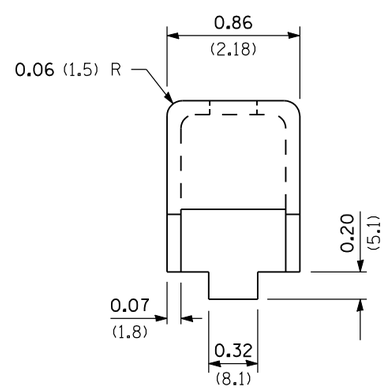

END VIEW

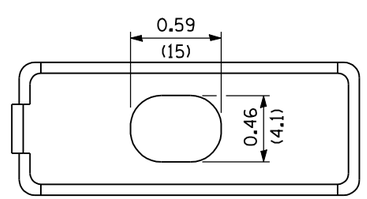

PLAN VIEW

STAINLESS STEEL CLIP

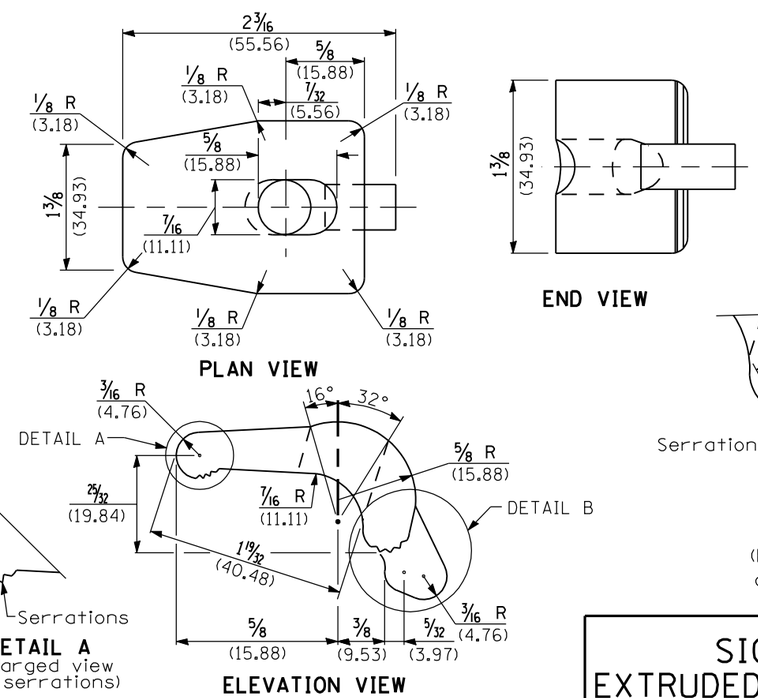

ALUMINUM CLIP

Illinois Department of Transportation

APPROVED January 1, 2009
ENGINEER OF OPERATIONS

APPROVED January 1, 2009
ENGINEER OF DESIGN AND ENVIRONMENT

ISSUED 1-1-00

SIGN PANELS EXTRUDED ALUMINUM TYPE

(Sheet 2 of 2)

STANDARD 720021-02

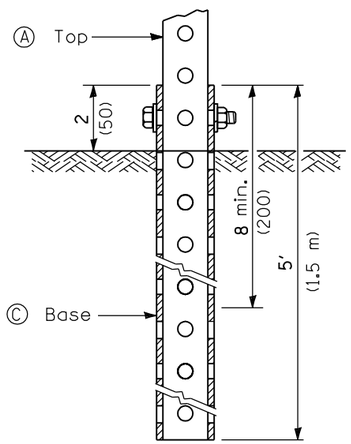

GROUND MOUNT DETAIL

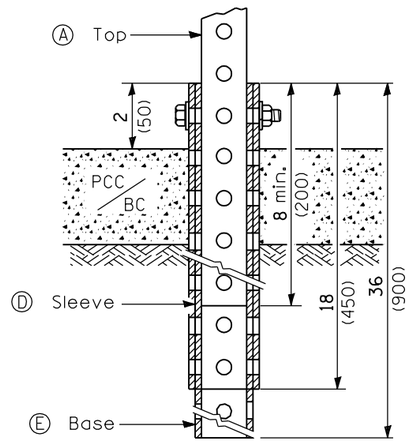

PAVEMENT MOUNT DETAIL

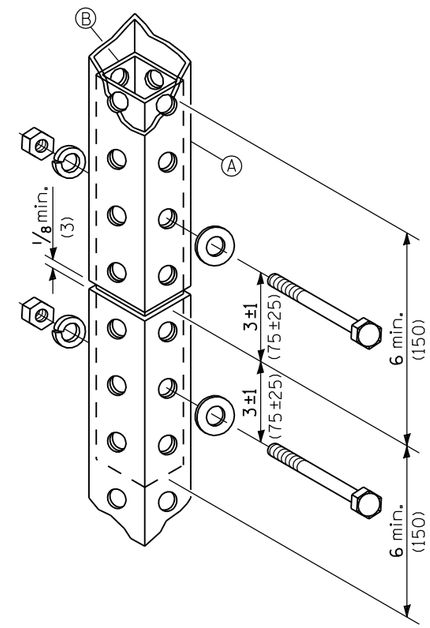

SPLICE DETAIL

Ⓐ	2 x 2 x var.	(51 x 51 var.)
Ⓑ	1¾ x 1¾ x 12	(44 x 44 x 300)
Ⓒ	2¼ x 2¼ x 60	(57 x 57 x 1500)
Ⓓ	2½ x 2½ x 18	(64 x 64 x 450)
Ⓔ	2¼ x 2¼ x 36)	(57 x 57 x 900)

GENERAL NOTES

All bolts ⅜ (M10) hex head zinc or cadmium plated.

All dimensions are in inches (millimeters) unless otherwise shown.

Illinois Department of Transportation

APPROVED January 1, 2009
ENGINEER OF OPERATIONS

APPROVED January 1, 2009
ENGINEER OF DESIGN AND ENVIRONMENT

ISSUED 1-1-07

DATE	REVISIONS
1-1-09	Switched units to English (metric).
1-1-07	New Standard. Used to be part of Standard 720006.

TELESCOPING STEEL SIGN SUPPORT

STANDARD 728001-01

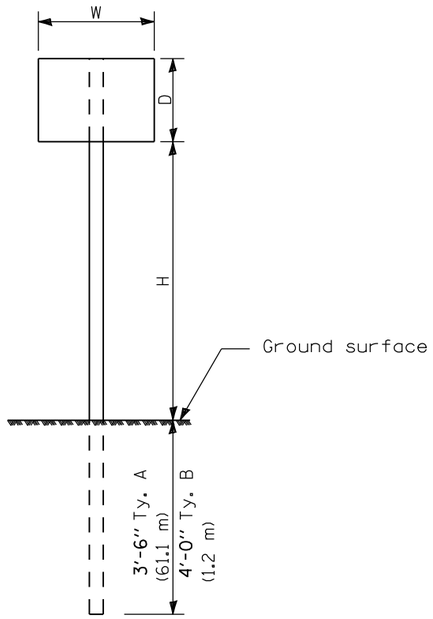

ONE POST INSTALLATION

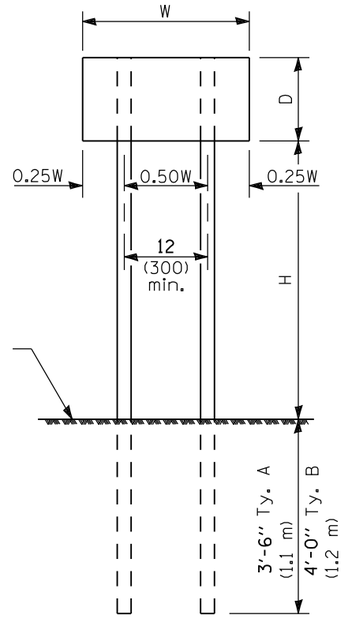

TWO POST INSTALLATION

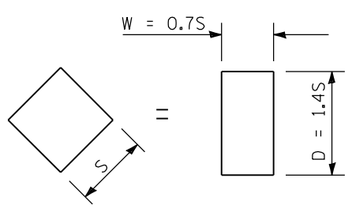

For diamond shaped sign with side S as shown, use required post size for a sign with W = 0.7S and D = 1.4S.

SIGN DEPTH (D)	H	NO. AND TYPE OF POST FOR SIGN WIDTH (W)				
		12 (300)	18 (450)	24 (600)	30 (750)	36 (900)
18 (450)	5'-0" (1.5 m)	A	A	A	A	A
	5'-6" (1.7 m)	A	A	A	A	A
	6'-0" (1.8 m)	A	A	A	A	B
	6'-6" (2.0 m)	A	A	A	A	B
	7'-0" (2.1 m)	A	A	A	A	B
	7'-6" (2.3 m)	A	A	A	A	B
	8'-0" (2.4 m)	A	A	A	A	B
	8'-6" (2.6 m)	A	A	A	B	B
	9'-0" (2.7 m)	A	A	A	B	B
24 (600)	5'-0" (1.5 m)	A	A	A	A	B
	5'-6" (1.7 m)	A	A	A	A	B
	6'-0" (1.8 m)	A	A	A	B	B
	6'-6" (2.0 m)	A	A	A	B	B
	7'-0" (2.1 m)	A	A	A	B	B
	7'-6" (2.3 m)	A	A	A	B	B
	8'-0" (2.4 m)	A	A	A	B	2A
	8'-6" (2.6 m)	A	A	B	B	2A
	9'-0" (2.7 m)	A	A	B	B	2A
30 (750)	5'-0" (1.5 m)	A	A	A	B	B
	5'-6" (1.7 m)	A	A	A	B	2A
	6'-0" (1.8 m)	A	A	A	B	2A
	6'-6" (2.0 m)	A	A	A	B	2A
	7'-0" (2.1 m)	A	A	B	B	2A
	7'-6" (2.3 m)	A	A	B	B	2A
	8'-0" (2.4 m)	A	A	B	B	2A
	8'-6" (2.6 m)	A	A	B	2A	2A
	9'-0" (2.7 m)	A	A	B	2A	2A
36 (900)	5'-0" (1.5 m)	A	A	B	B	2A
	5'-6" (1.7 m)	A	A	B	B	2A
	6'-0" (1.8 m)	A	A	B	B	2A
	6'-6" (2.0 m)	A	A	B	2A	2A
	7'-0" (2.1 m)	A	A	B	2A	2A
	7'-6" (2.3 m)	A	A	B	2A	2A
	8'-0" (2.4 m)	A	B	B	2A	2A
	8'-6" (2.6 m)	A	B	B	2A	2B
	9'-0" (2.7 m)	A	B	2A	2A	2B
4'-0" (1.2 m)	5'-0" (1.5 m)	A	A	B	2A	2A
	5'-6" (1.7 m)	A	B	B	2A	2A
	6'-0" (1.8 m)	A	B	B	2A	2A
	6'-6" (2.0 m)	A	B	2A	2A	2B
	7'-0" (2.1 m)	A	B	2A	2A	2B
	7'-6" (2.3 m)	A	B	2A	2B	2B
	8'-0" (2.4 m)	A	B	2A	2B	2B
	8'-6" (2.6 m)	B	B	2B	2B	2B
	9'-0" (2.7 m)	B	2A	2B	2B	2B

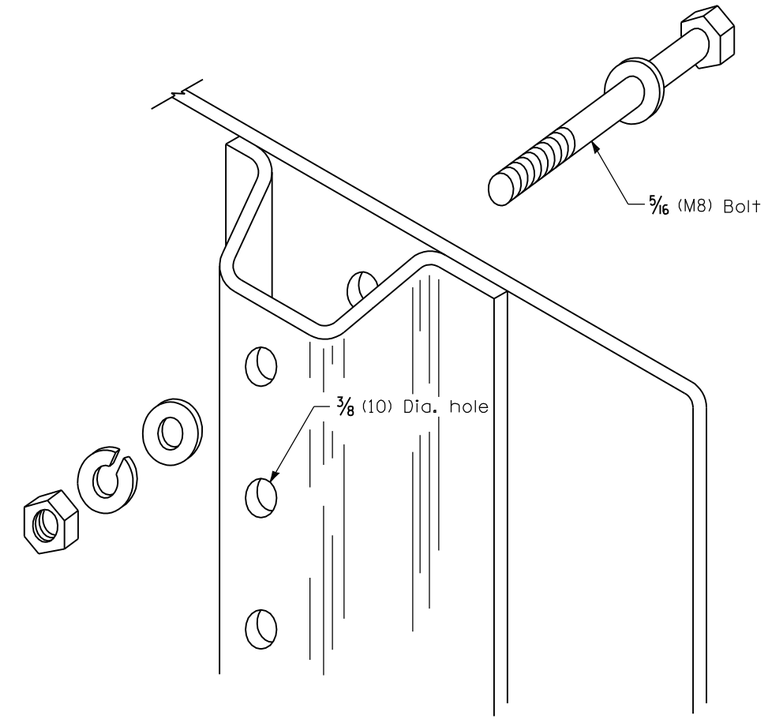

DETAIL OF MOUNTING SIGN TO POST

NOTE: Minimum of 2 bolts per post required.

GENERAL NOTES

DESIGN: Current AASHTO Standard Specifications for Structural Supports for Highway Signs, Luminaires and Traffic Signals.

LOADING: for 60 mph (95 km/h) wind velocity with 30% gust factor, normal to sign.

SOIL PRESSURE: Minimum allowable soil pressure 1.25 tsf (120 kPa).

See Standard 720011 for details of Types A and B posts.

All dimensions are in inches (millimeters) unless otherwise shown.

Illinois Department of Transportation

PASSED January 1, 2009
ENGINEER OF POLICY AND PROCEDURES

APPROVED January 1, 2009
ENGINEER OF DESIGN AND ENVIRONMENT

ISSUED 1-1-97

DATE	REVISIONS
1-1-09	Switched units to English (metric).
1-1-97	Renum. Standard 2363-2.

APPLICATIONS OF TYPES A & B METAL POSTS (FOR SIGNS & MARKERS)

STANDARD 729001-01

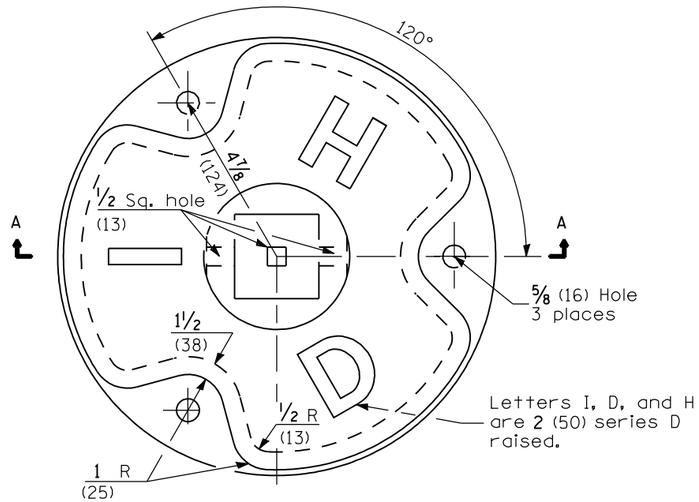

PLAN

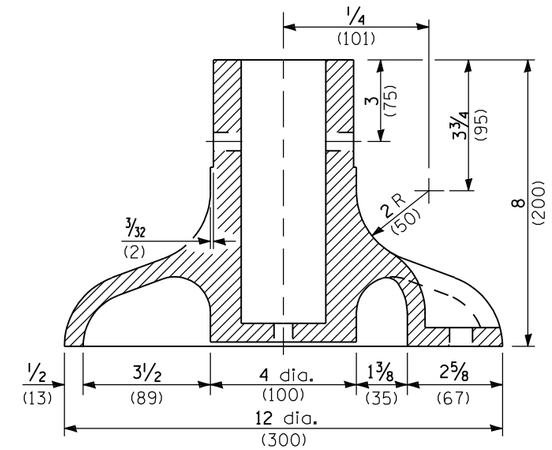

SECTION A-A

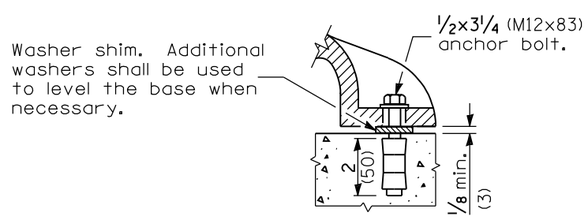

ANCHOR BOLT DETAIL

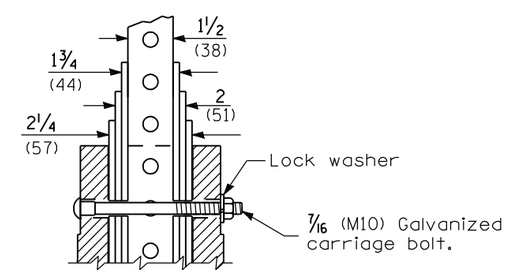

POST ASSEMBLY DETAIL

All dimensions are in inches (millimeters) unless otherwise shown.

Illinois Department of Transportation

APPROVED January 1, 2009
ENGINEER OF OPERATIONS

APPROVED January 1, 2009
ENGINEER OF DESIGN AND ENVIRONMENT

ISSUED 1-1-07

DATE	REVISIONS
1-1-09	Switched units to English (metric).
1-1-07	New Standard. Used to be part of Standard 720006.

BASE FOR TELESCOPING STEEL SIGN SUPPORT

STANDARD 731001-01

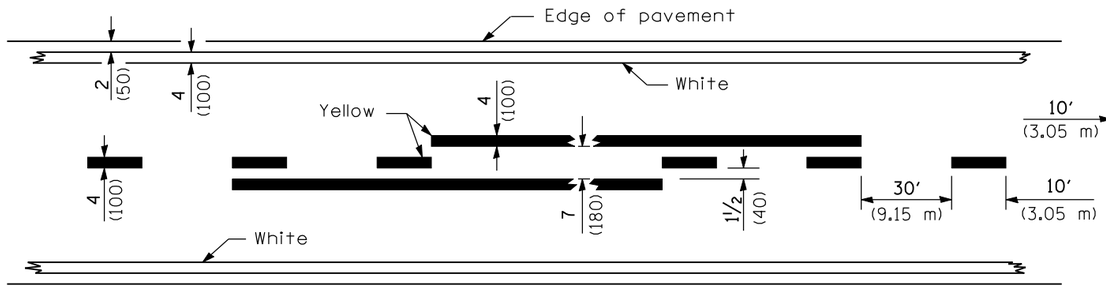

2 LANE

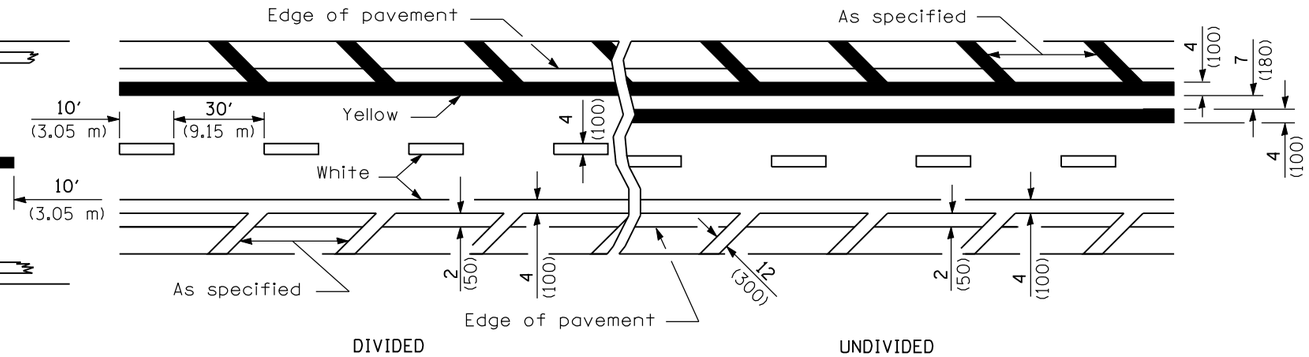

MULTI LANE

LANE AND EDGE LINES

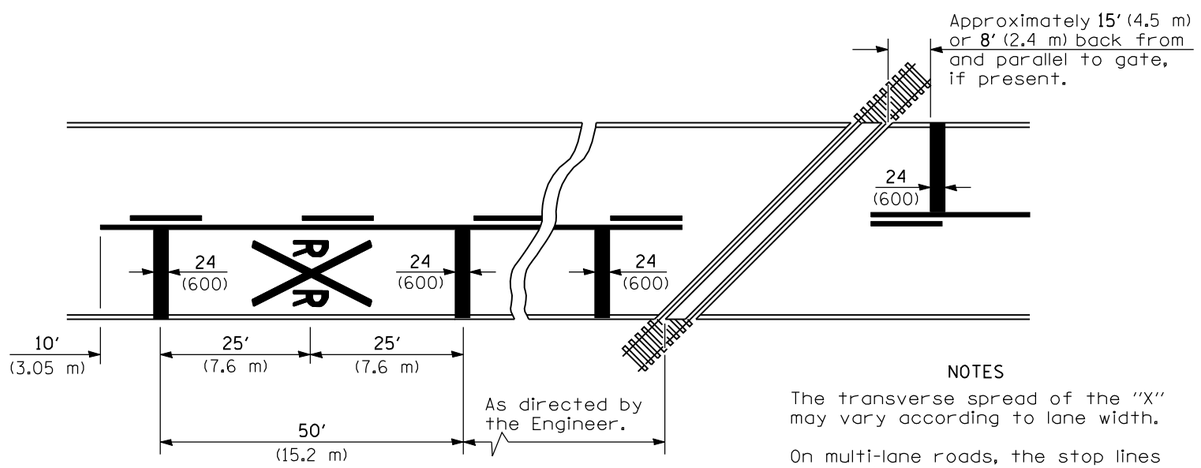

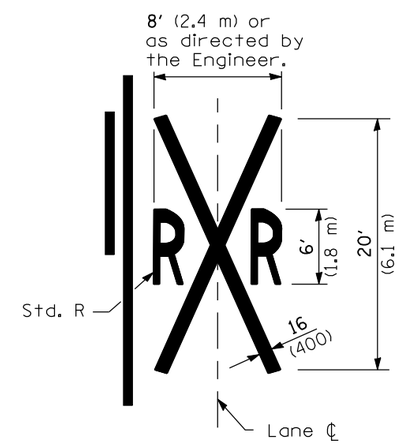

NOTES

The transverse spread of the "X" may vary according to lane width.

On multi-lane roads, the stop lines shall extend across all approach lanes and separate RXR symbols shall be placed adjacent to each other in each lane.

When the pavement marking symbol is used, a portion of the symbol should be located directly adjacent to the Advance Warning Sign (W10-1) as placed by Table II-1, condition B of the MUTCD.

PAVEMENT MARKINGS AT RAILROAD-HIGHWAY GRADE CROSSING

All dimensions are in inches (millimeters) unless otherwise shown.

Illinois Department of Transportation

APPROVED January 1, 2009
ENGINEER OF OPERATIONS

APPROVED January 1, 2009
ENGINEER OF DESIGN AND ENVIRONMENT

ISSUED 1-1-97

DATE	REVISIONS
1-1-09	Switched units to
	English (metric).
1-1-99	Rev. dimen. & added 3rd
	note to pav't markings
	@ RR-Hwy grade Xing.

TYPICAL PAVEMENT MARKINGS

(Sheet 1 of 2)

STANDARD 780001–02

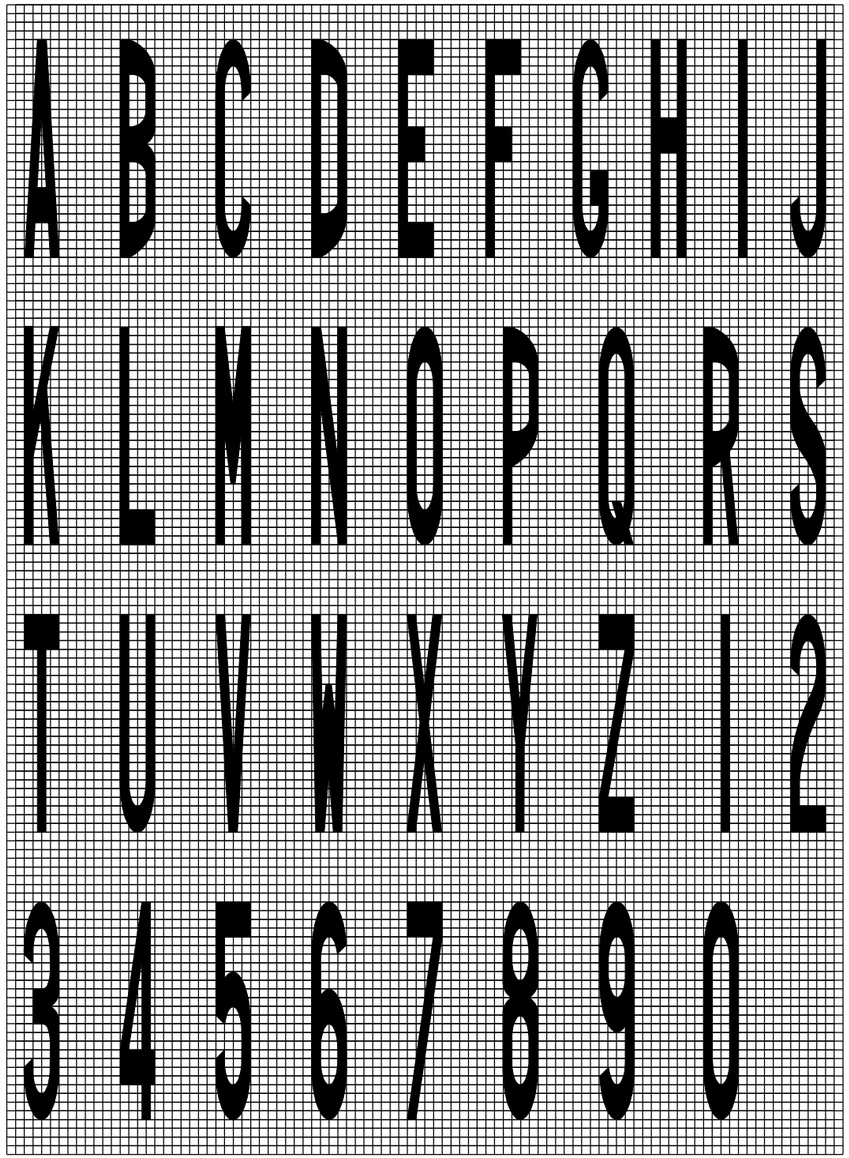

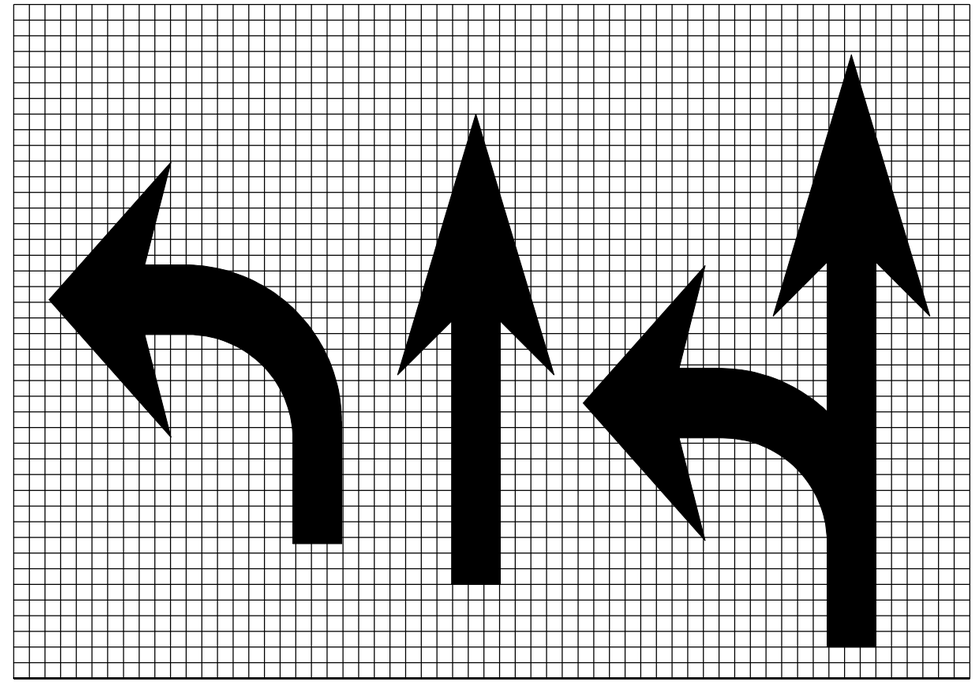

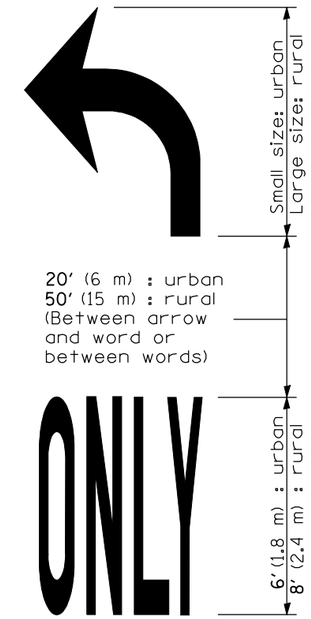

WORD AND ARROW LAYOUT

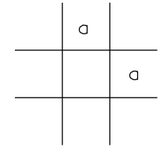

Legend Height	Arrow Size	a
6′ (1.8 m)	Small	2.9 (74)
8′ (2.4 m)	Large	3.8 (96)

The space between adjacent letters or numerals should be approximately 3 (75) for 6′ (1.8 m) legend and 4 (100) for 8′ (2.4 m) legend.

LETTER AND ARROW GRID SCALE

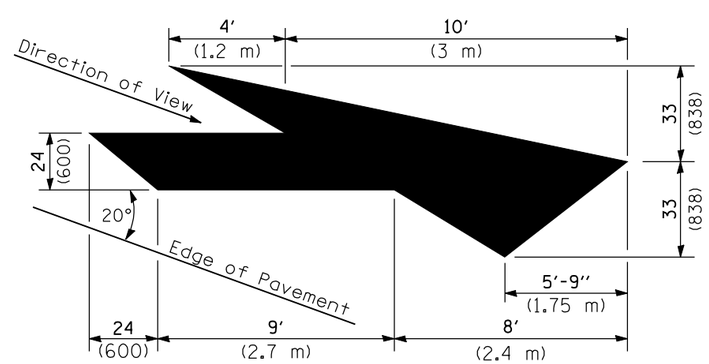

LANE DROP ARROW

Right lane drop arrow shown.
Use mirror image for left lane.

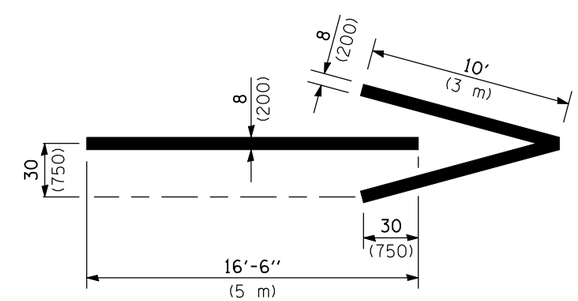

WRONG WAY ARROW

Illinois Department of Transportation

APPROVED January 1, 2009
ENGINEER OF OPERATIONS

APPROVED January 1, 2009
ENGINEER OF DESIGN AND ENVIRONMENT

ISSUED 1-1-97

TYPICAL PAVEMENT MARKINGS

(Sheet 2 of 2)

STANDARD 780001–02

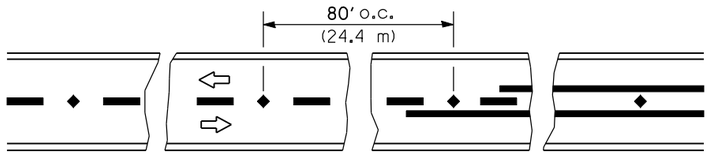

Reduce to 40′ (12.2 m) o.c. on curves with posted or advisory speeds of 45 mph (70 km/h) or less.

TWO-LANE / TWO-WAY

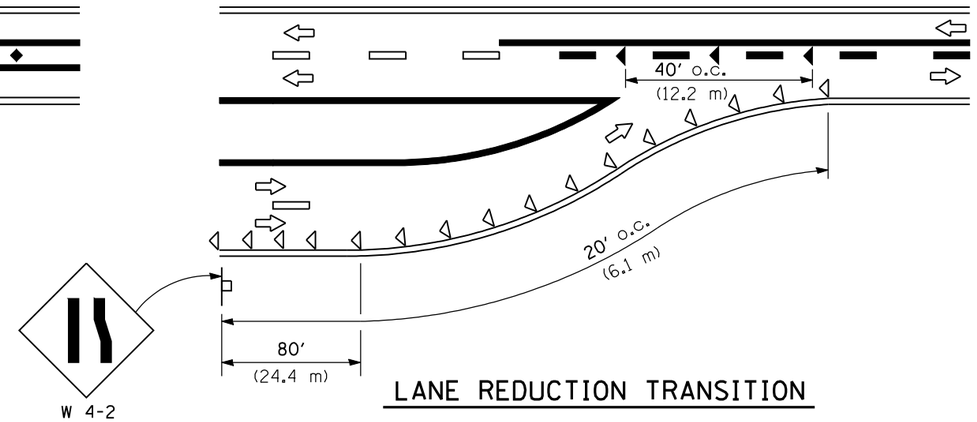

LANE REDUCTION TRANSITION

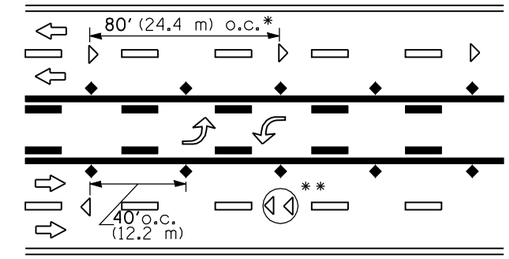

*,** See MULTI LANE DIVIDED detail for lane marker notes.

TWO-WAY LEFT TURN

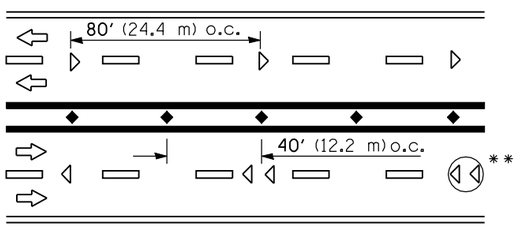

*,** See MULTI LANE DIVIDED detail for lane marker notes.

MULTI-LANE UNDIVIDED

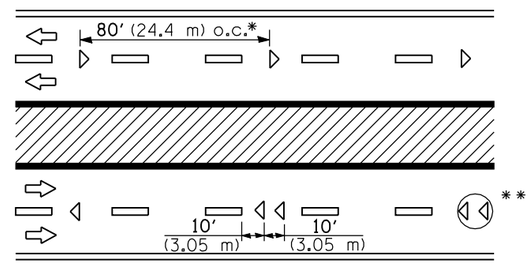

* Reduce to 40′ (12.2 m) o.c. on curves where advisory speeds are 10 mph (15 km/h) lower than posted speeds.

** Where double lane line markers are specified, they shall be spaced as shown.

MULTI-LANE DIVIDED

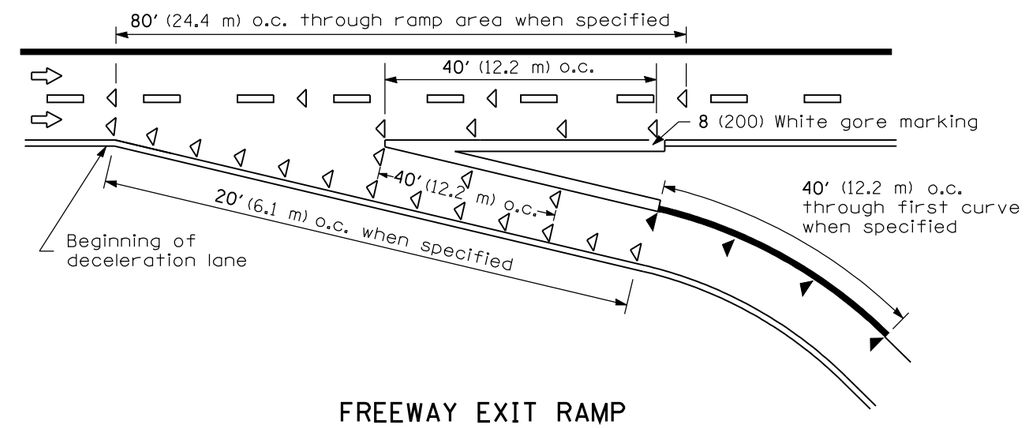

FREEWAY EXIT RAMP

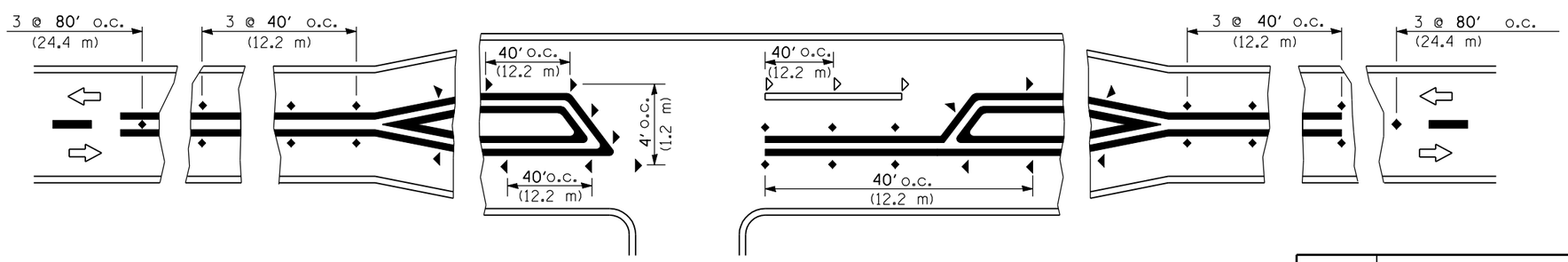

RURAL LEFT TURN

SYMBOLS

- Yellow stripe
- White stripe
- One-way amber marker
- One-way crystal marker
- Two-way amber marker

All dimensions are in inches (millimeters) unless otherwise shown.

Illinois Department of Transportation

APPROVED January 1, 2009
ENGINEER OF OPERATIONS

APPROVED January 1, 2009
ENGINEER OF DESIGN AND ENVIRONMENT

ISSUED 1-1-97

DATE	REVISIONS
1-1-09	Switched units to
	English (metric).
1-1-99	Extended double line to
	show different scenario
	in RURAL LEFT TURN.

TYPICAL APPLICATIONS RAISED REFLECTIVE PAVEMENT MARKERS

STANDARD 781001-03

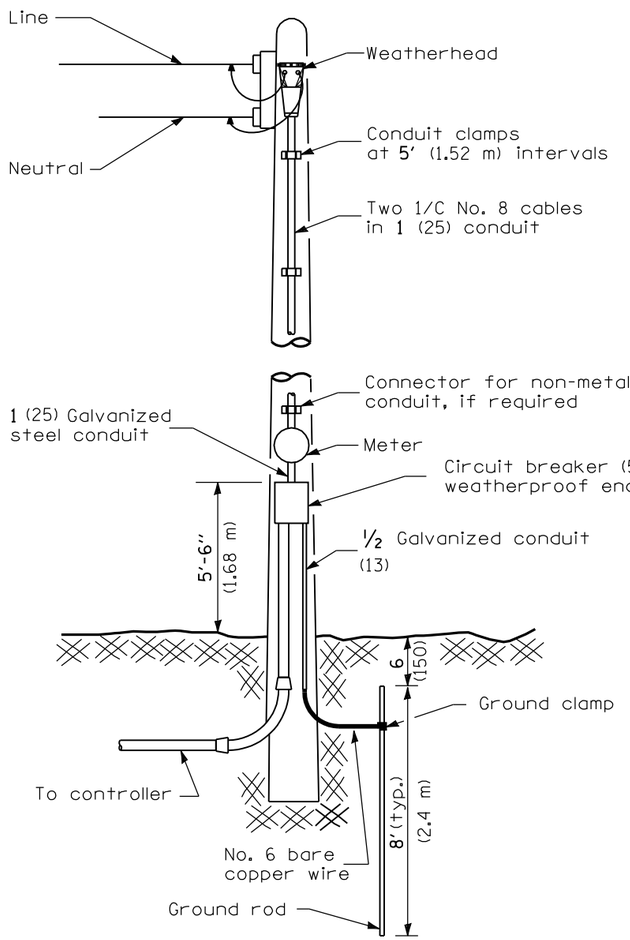

TYPE A

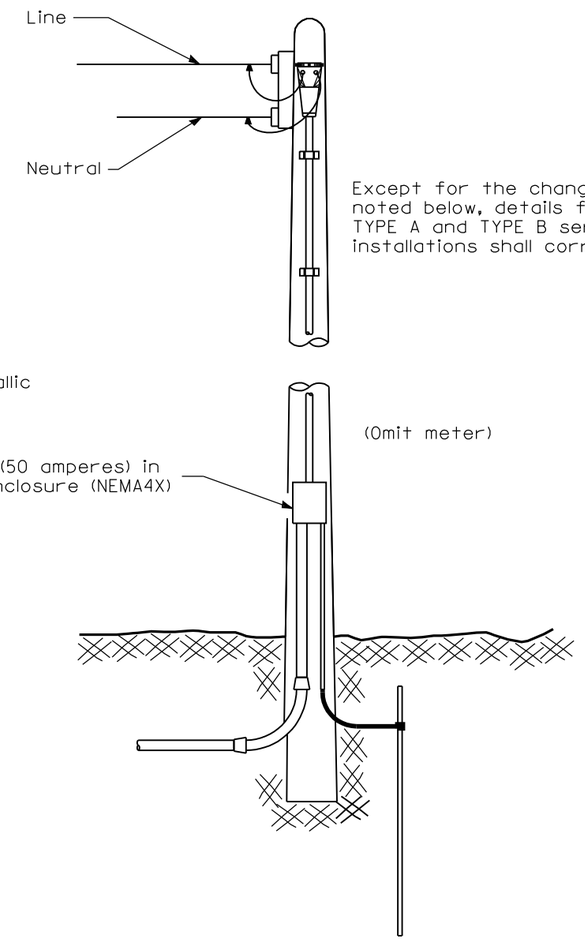

TYPE B

Except for the changes noted below, details for TYPE A and TYPE B service installations shall correspond.

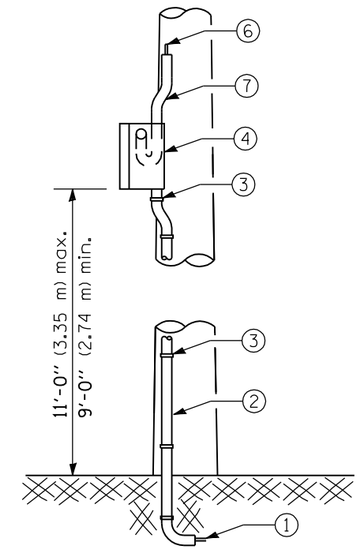

TYPE C

The following equipment is to be furnished and installed on the TYPE C installation.

1 = Cable in conduit (electric cable, No. 6, 2/C except where otherwise specified)

2 = Galvanized steel conduit 1¼ (32) with bend

3 = Galvanized conduit clamps

4 = Aluminum weatherproof box with gasketed cover. Weatherproof box shall be installed facing the adjacent property line. (See diagram for alternate installation.)

5 = Ground stud for neutral connection

6 = Service cables

7 = Offset weatherproof fitting

8 = Circuit breaker

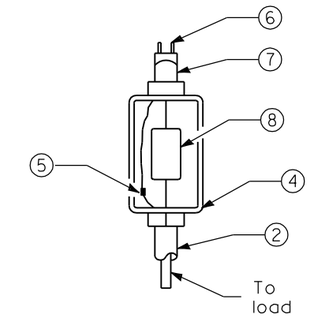

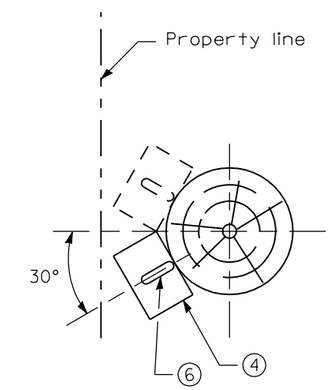

ALTERNATE INSTALLATION

(Installation when weatherproof box cannot be installed facing the adjacent property line.)

All dimensions are in inches (millimeters) unless otherwise shown.

Illinois Department of Transportation

APPROVED January 1, 2009
ENGINEER OF OPERATIONS

APPROVED January 1, 2009
ENGINEER OF DESIGN AND ENVIRONMENT

ISSUED 1-1-02

DATE	REVISIONS
1-1-09	Switched units to English (metric).
1-1-02	Renum. Standard 2373-1.

ELECTRICAL SERVICE INSTALLATION DETAILS

STANDARD 805001-01

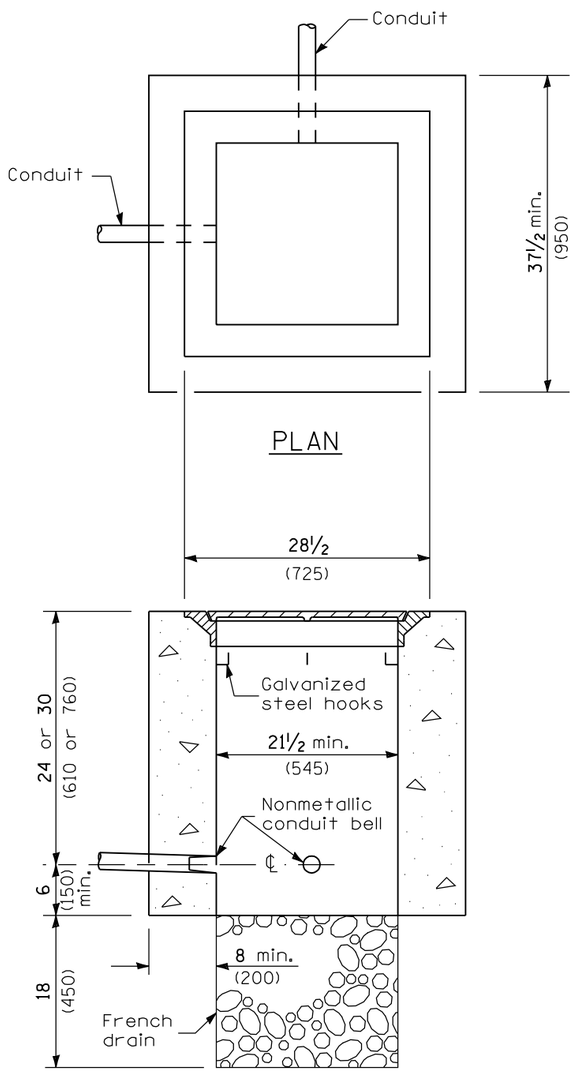

ELEVATION

PORTLAND CEMENT CONCRETE

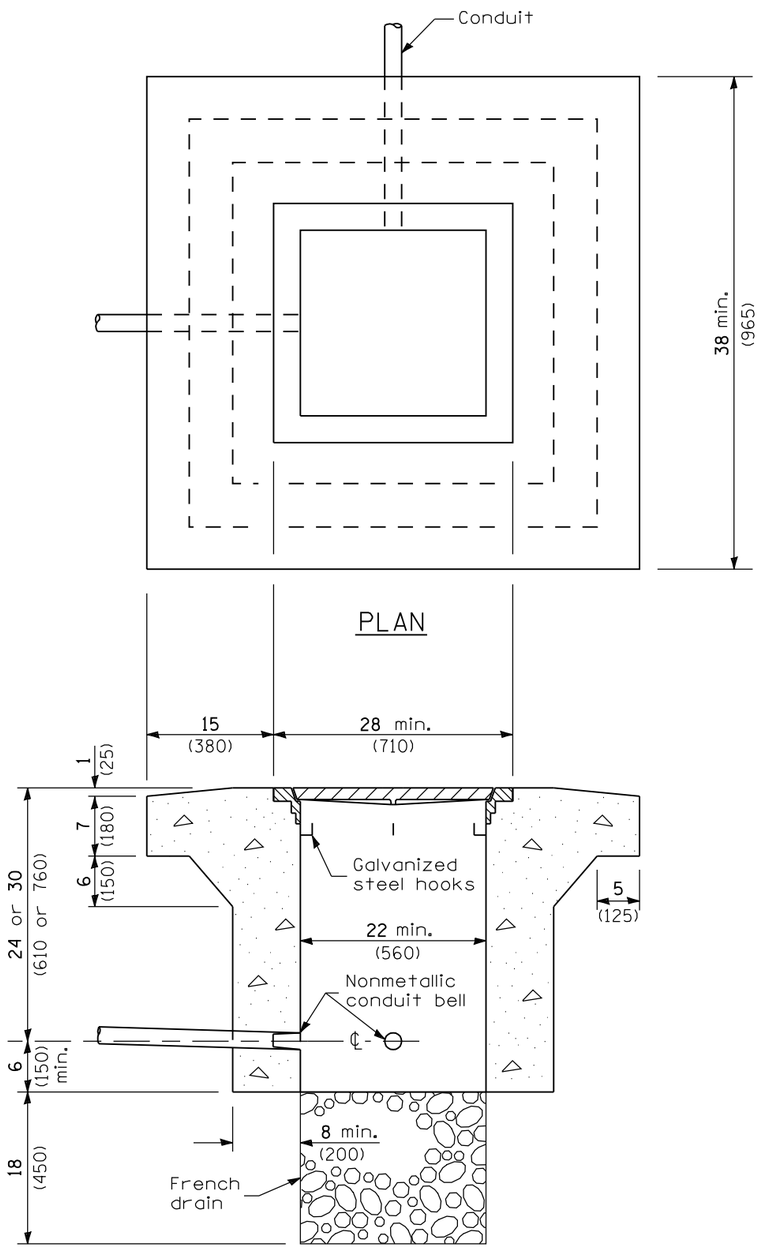

ELEVATION

PORTLAND CEMENT CONCRETE
HEAVY DUTY

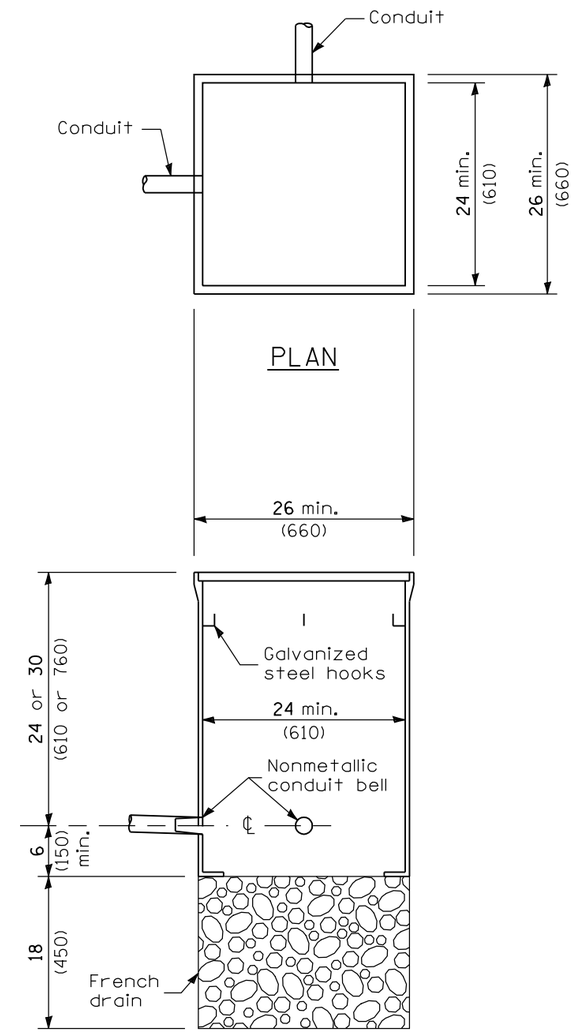

ELEVATION

COMPOSITE CONCRETE

All dimensions are in inches (millimeters) unless otherwise shown.

Illinois Department of Transportation

APPROVED January 1, 2009
ENGINEER OF OPERATIONS
APPROVED January 1, 2009
ENGINEER OF DESIGN AND ENVIRONMENT

ISSUED 1-1-97

DATE	REVISIONS
1-1-09	Switched units to English (metric).
1-1-07	Revised composite conc. handhole. Rem. weights of frames and covers.

HANDHOLES

STANDARD 814001-02

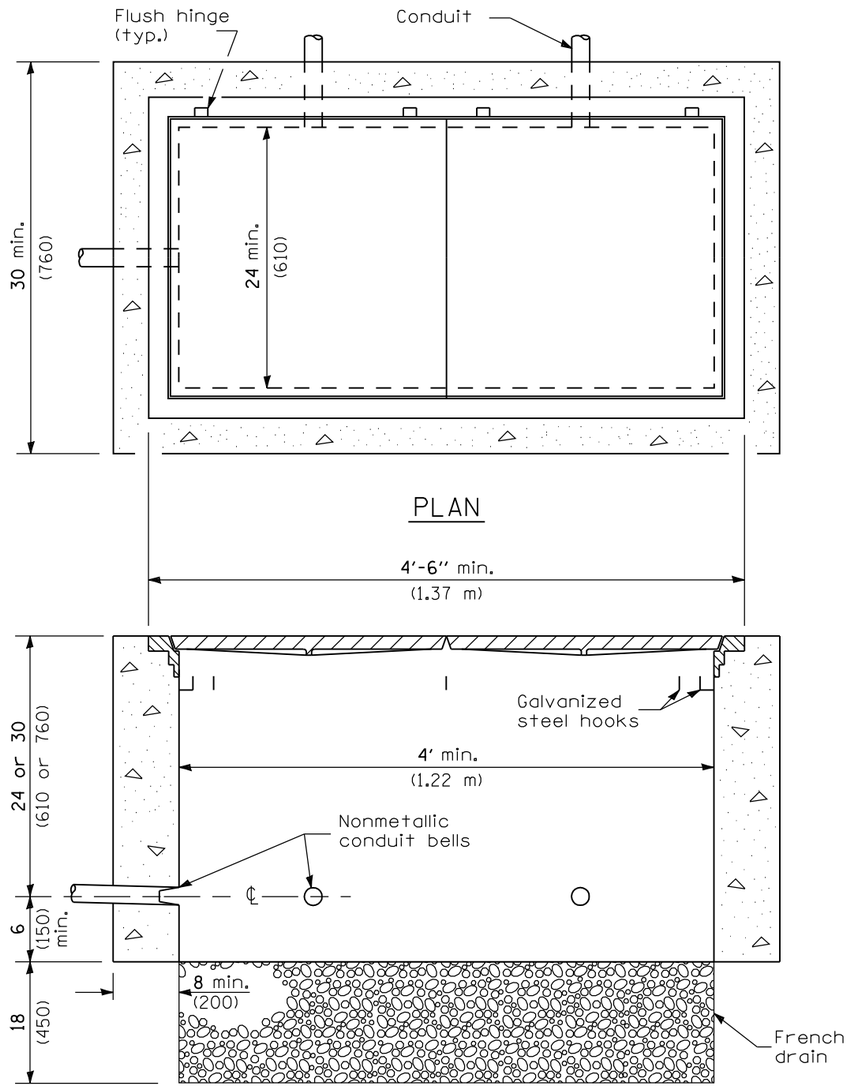

ELEVATION

PORTLAND CEMENT CONCRETE

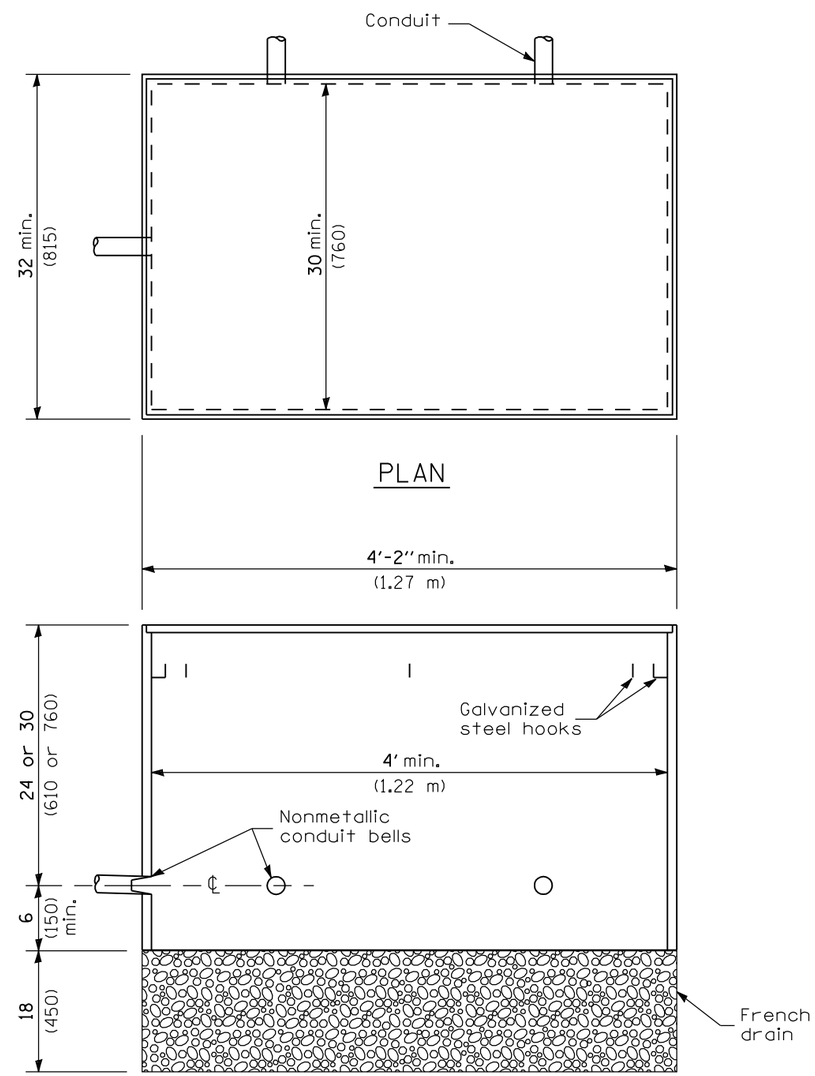

ELEVATION

COMPOSITE CONCRETE

All dimensions are in inches (millimeters) unless otherwise shown.

Illinois Department of Transportation

APPROVED January 1, 2009
ENGINEER OF OPERATIONS

APPROVED January 1, 2009
ENGINEER OF DESIGN AND ENVIRONMENT

ISSUED 1-1-97

DATE	REVISIONS
1-1-09	Switched units to English (metric).
1-1-07	Revised composite conc. handhole. Rem. weights of frames and covers.

DOUBLE HANDHOLES

STANDARD 814006-02

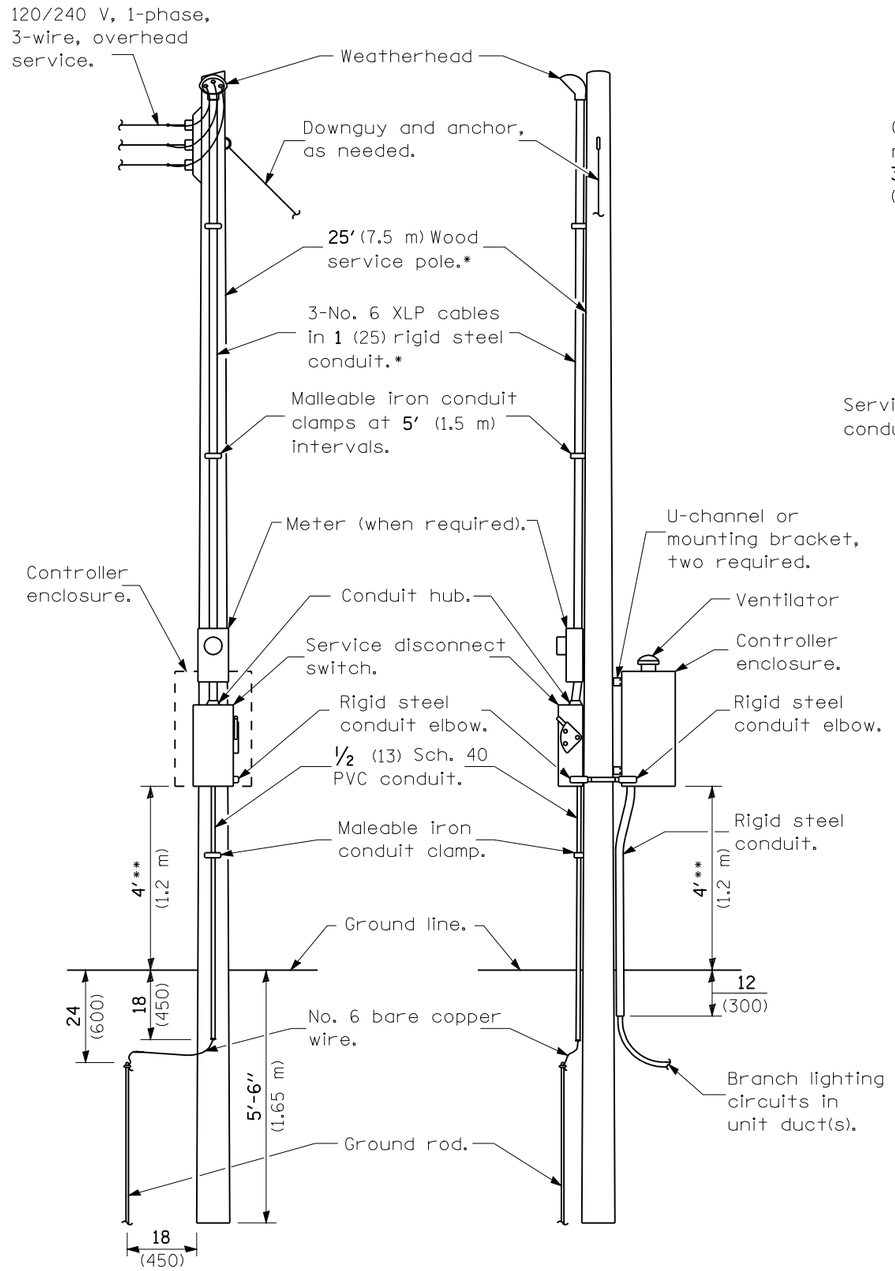

FRONT SIDE

ELECTRIC SERVICE INSTALLATION

** Or as directed by Utility Company.

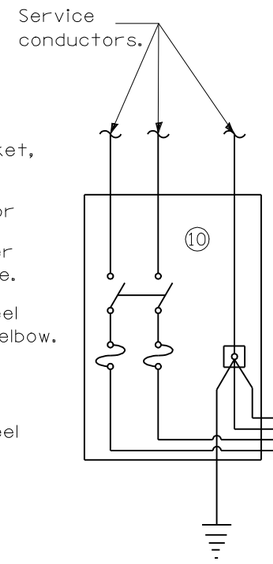

DISCONNECT SWITCH

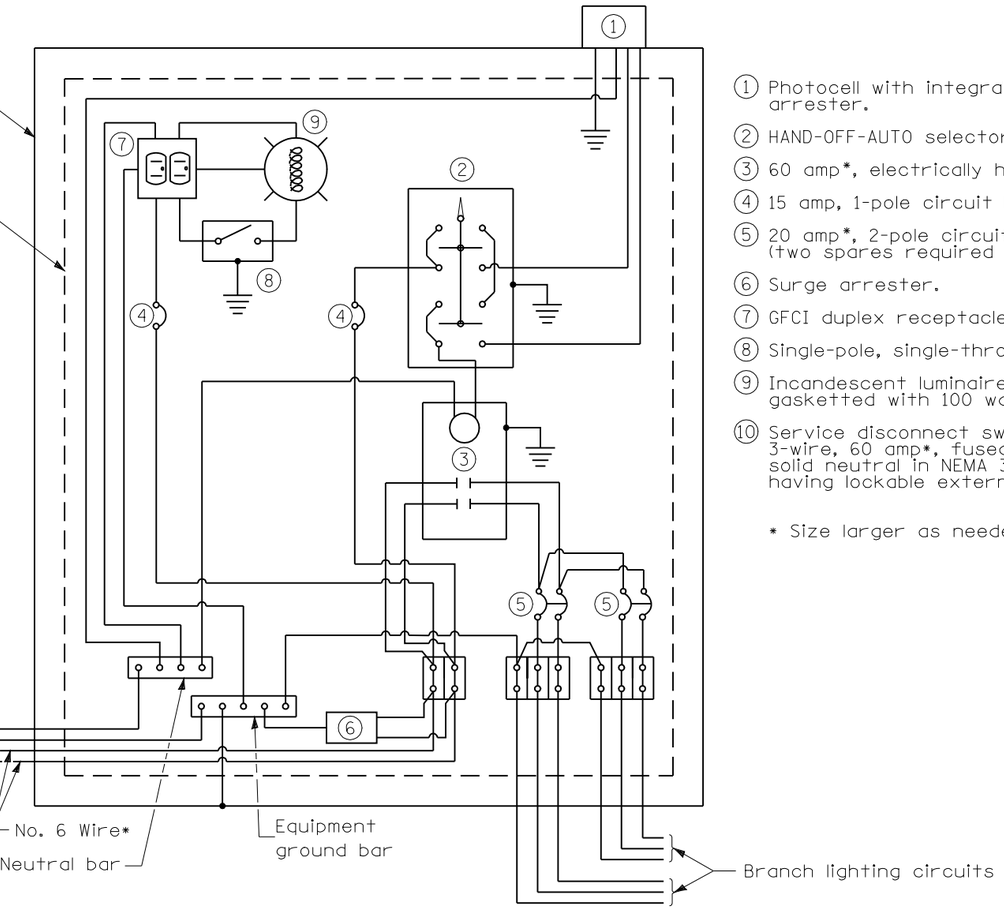

PHOTOCELL RELAY

1. Photocell with integral surge arrester.
2. HAND-OFF-AUTO selector switch.
3. 60 amp*, electrically held contactor.
4. 15 amp, 1-pole circuit breaker.
5. 20 amp*, 2-pole circuit breaker (two spares required but not shown).
6. Surge arrester.
7. GFCI duplex receptacle.
8. Single-pole, single-throw switch.
9. Incandescent luminaire, enclosed and gasketted with 100 watt lamp.
10. Service disconnect switch - 2-pole, 3-wire, 60 amp*, fused at 60 amp*, solid neutral in NEMA 3R enclosure having lockable external handle.

* Size larger as needed.

GENERAL NOTES

Provide 12x9x1 (305x225x25) watertight pouch mounted inside controller door with as-built plans and schematics.

Provide engraved nameplate on front of enclosure reading "LIGHTING".

Enclosure shall be mounted to pole with pole-bands and lag-bolts.

All dimensions are in inches (millimeters) unless otherwise shown.

Illinois Department of Transportation

PASSED January 1, 2010
ENGINEER OF PRELIMINARY ENGINEERING

APPROVED January 1, 2010
ENGINEER OF DESIGN AND ENVIRONMENT

ISSUED 01-1-10

DATE	REVISIONS
1-1-10	New standard.

LIGHTING CONTROLLER 240V, POLE MOUNTED

STANDARD 825001

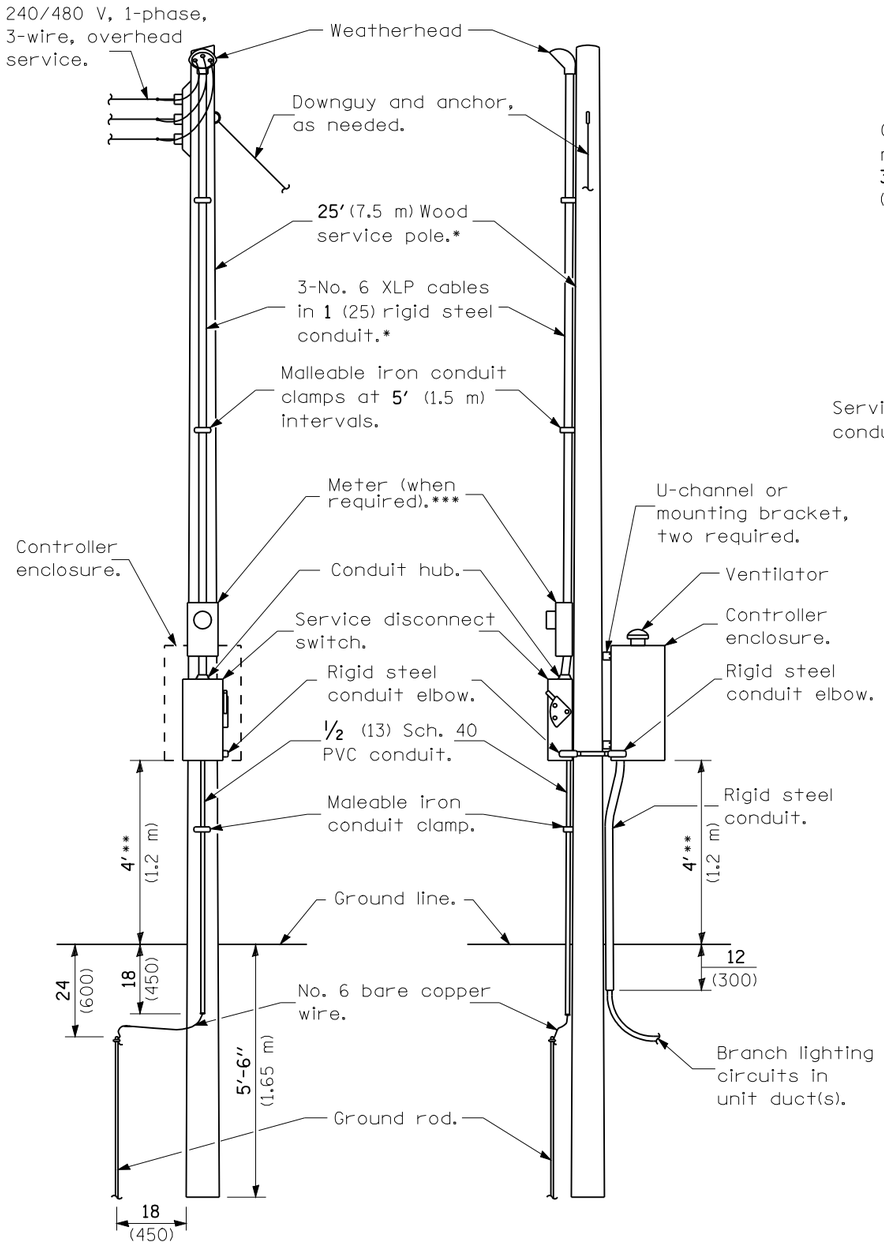

FRONT SIDE

ELECTRIC SERVICE INSTALLATION

** Or as directed by Utility Company.

*** When cold sequencing is required, provide a meter disconnect switch as directed by Utility Company.

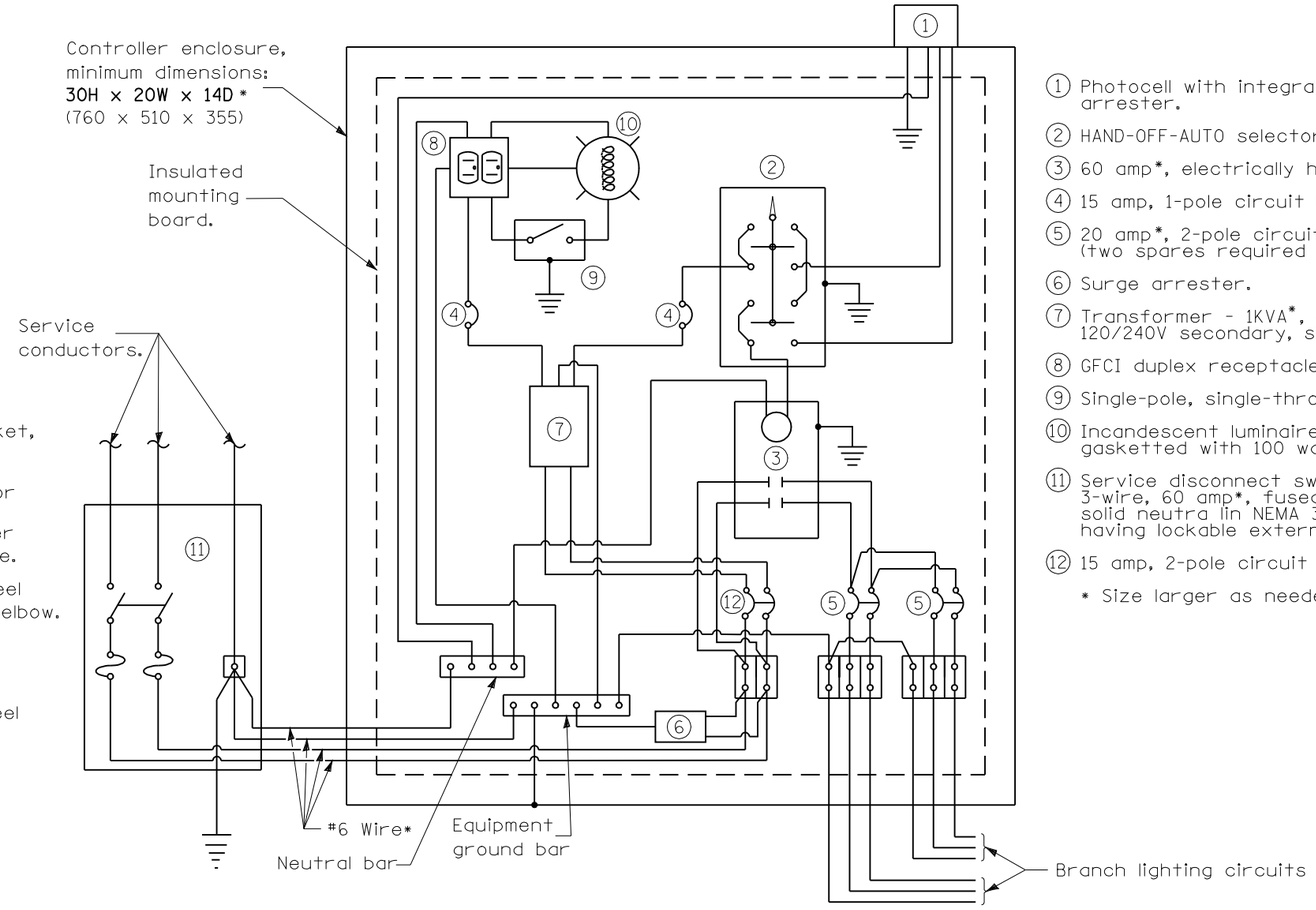

DISCONNECT SWITCH

PHOTOCELL RELAY

1. Photocell with integral surge arrester.
2. HAND-OFF-AUTO selector switch.
3. 60 amp*, electrically held contactor.
4. 15 amp, 1-pole circuit breaker.
5. 20 amp*, 2-pole circuit breaker (two spares required but not shown).
6. Surge arrester.
7. Transformer - 1KVA*, 480V primary, 120/240V secondary, single-phase, 60Hz.
8. GFCI duplex receptacle.
9. Single-pole, single-throw switch.
10. Incandescent luminaire, enclosed and gasketted with 100 watt lamp.
11. Service disconnect switch - 2-pole, 3-wire, 60 amp*, fused at 60 amp*, solid neutra lin NEMA 3R enclosure having lockable external handle.
12. 15 amp, 2-pole circuit breaker.

* Size larger as needed.

GENERAL NOTES

Provide 12x9x1 (305x225x25) watertight pouch mounted inside controller door with as-built plans and schematics.

Provide engraved nameplate on front of enclosure reading "LIGHTING".

Enclosure shall be mounted to pole with pole-bands and lag-bolts.

All dimensions are in inches (millimeters) unless otherwise shown.

Illinois Department of Transportation

PASSED January 1, 2010
ENGINEER OF PRELIMINARY ENGINEERING

APPROVED January 1, 2010
ENGINEER OF DESIGN AND ENVIRONMENT

ISSUED 1-1-10

DATE	REVISIONS
1-1-10	New standard.

LIGHTING CONTROLLER 480V, POLE MOUNTED

STANDARD 825006

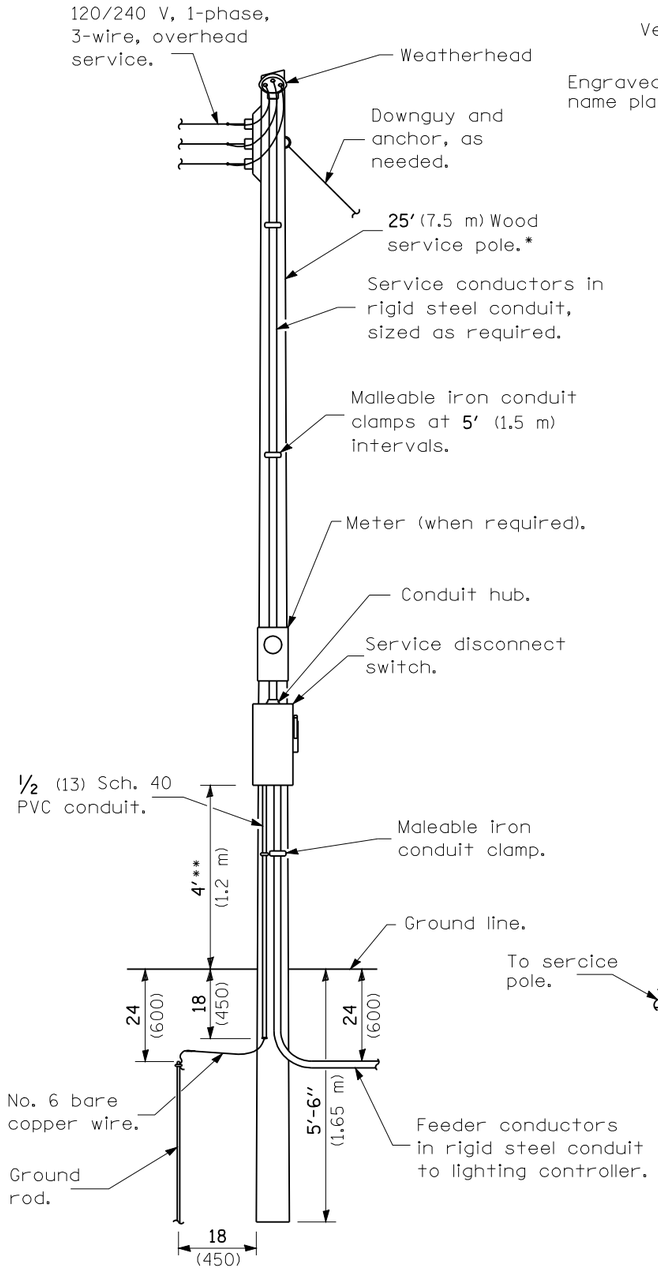

ELECTRIC SERVICE INSTALLATION

** Or as directed by Utility Company.

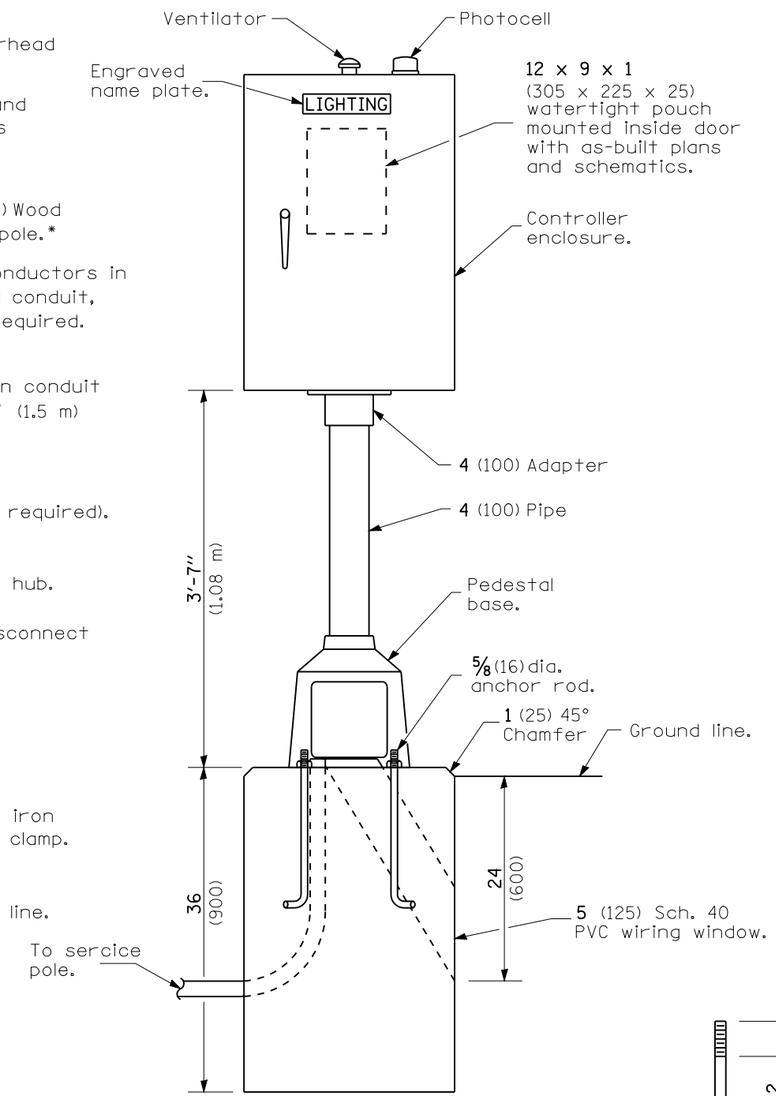

LIGHTING CONTROLLER

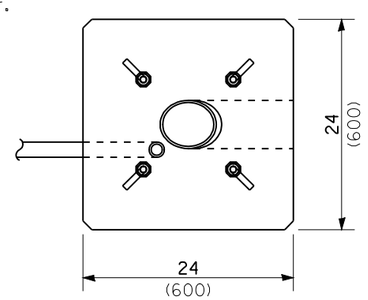

FOUNDATION (PLAN)

(Work pad not shown.)

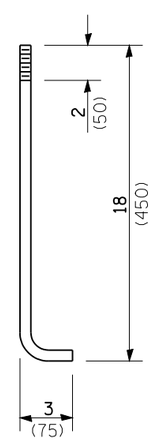

ANCHOR ROD DETAIL

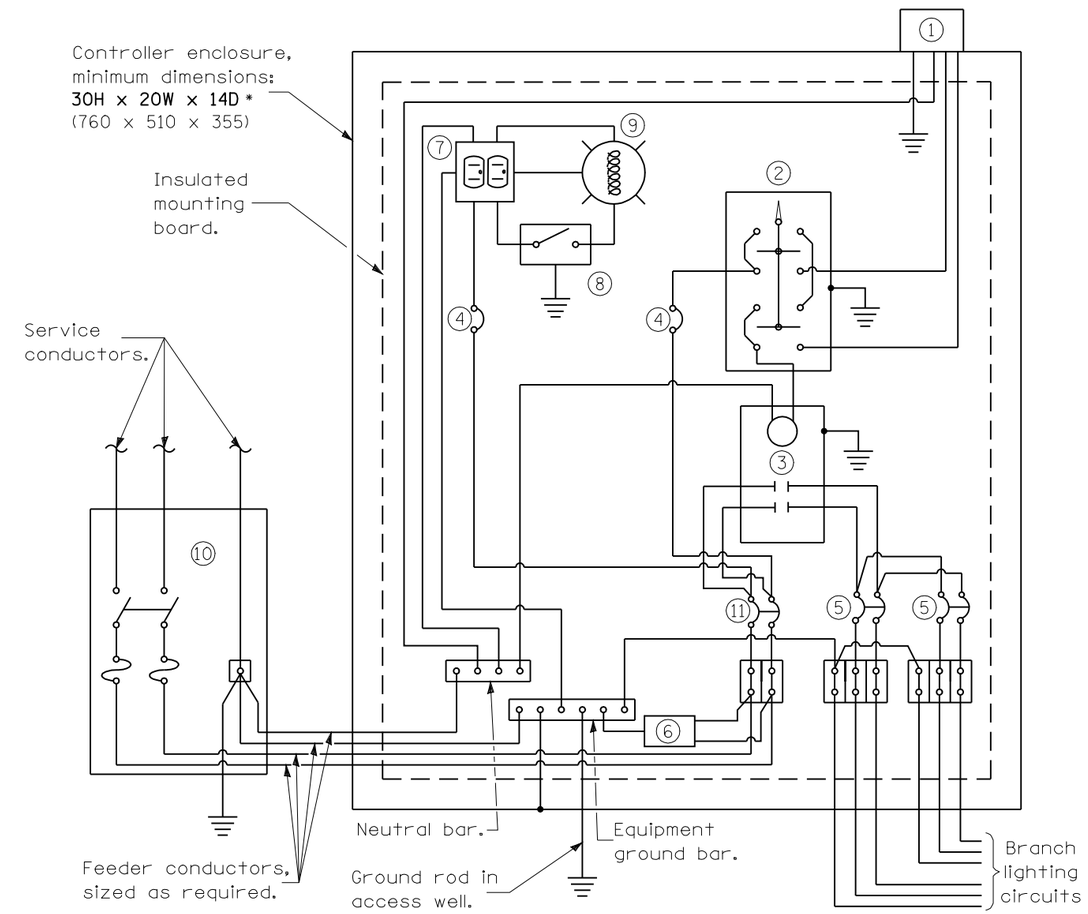

CONTROL SCHEMATIC

1. Photocell with integral surge arrester.
2. HAND-OFF-AUTO selector switch.
3. 60 amp*, electrically held contactor.
4. 15 amp, 1-pole circuit breaker.
5. 20 amp*, 2-pole circuit breaker (two spares required but not shown).
6. Surge arrester.
7. GFCI duplex receptacle.
8. Single-pole, single-throw switch.
9. Incandescent luminaire, enclosed and gasketted with 100 watt lamp.
10. Service disconnect switch - 2-pole, 3-wire, 60 amp*, fused at 60 amp*, solid neutral in NEMA 3R enclosure having lockable external handle.
11. 60 amp*, 2-pole circuit breaker.

* Size larger as needed.

All dimensions are in inches (millimeters) unless otherwise shown.

Illinois Department of Transportation

PASSED January 1, 2010
ENGINEER OF PRELIMINARY ENGINEERING
APPROVED January 1, 2010
ENGINEER OF DESIGN AND ENVIRONMENT

ISSUED 1-1-10

DATE	REVISIONS
1-1-10	New standard.

LIGHTING CONTROLLER 240V, PEDESTAL MOUNTED

STANDARD 825011

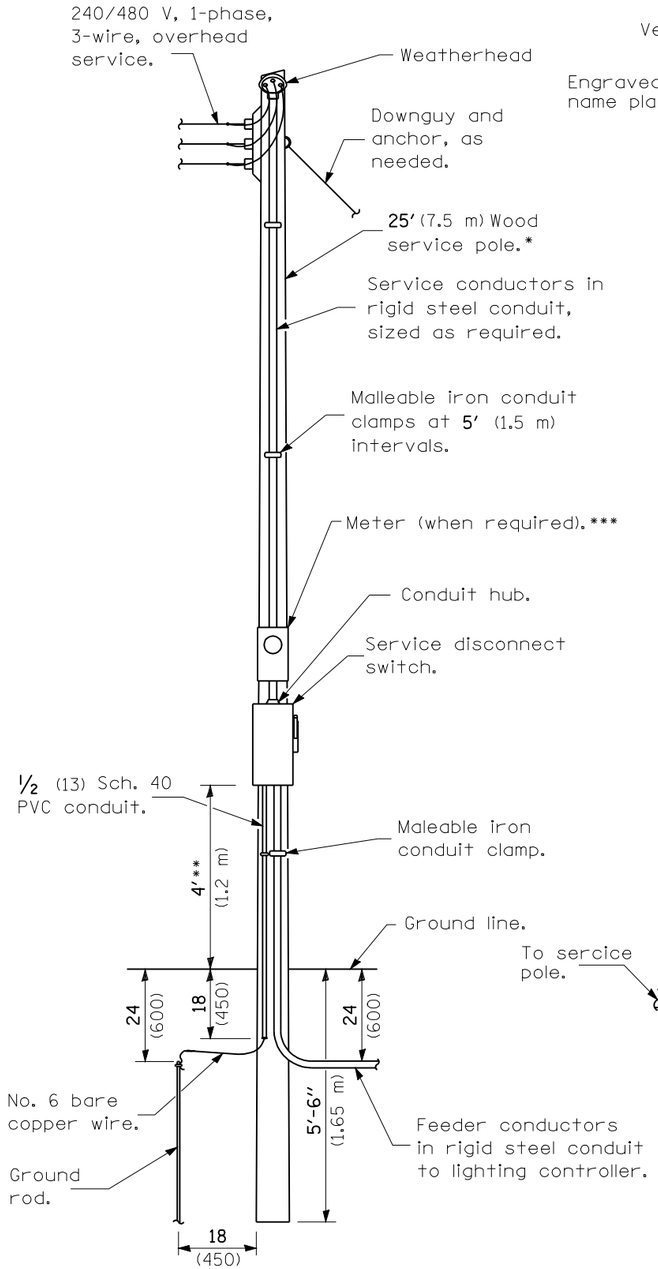

ELECTRIC SERVICE INSTALLATION

** Or as directed by Utility Company.

*** When cold sequencing is required, provide a meter disconnect switch as directed by Utility Company.

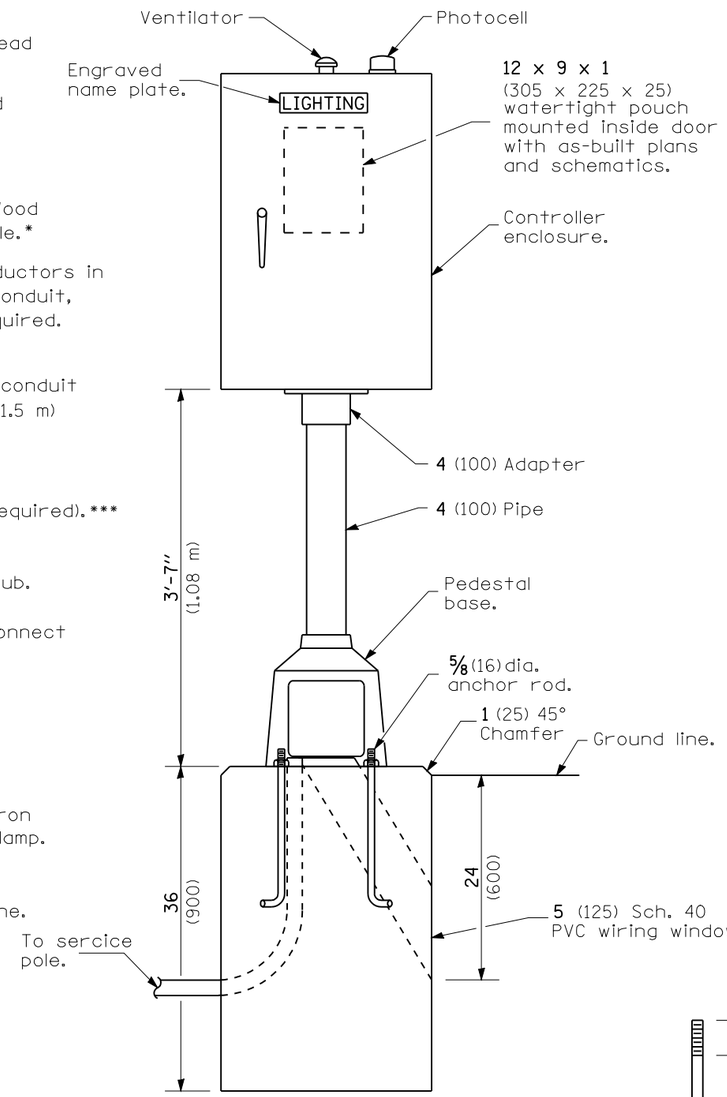

LIGHTING CONTROLLER

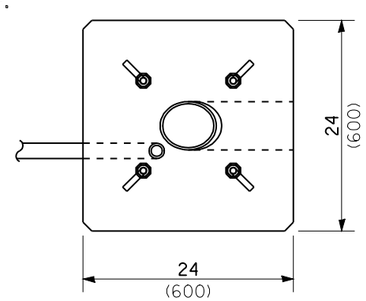

FOUNDATION (PLAN)

(Work pad not shown.)

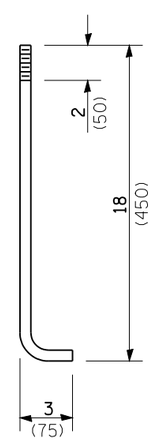

ANCHOR ROD DETAIL

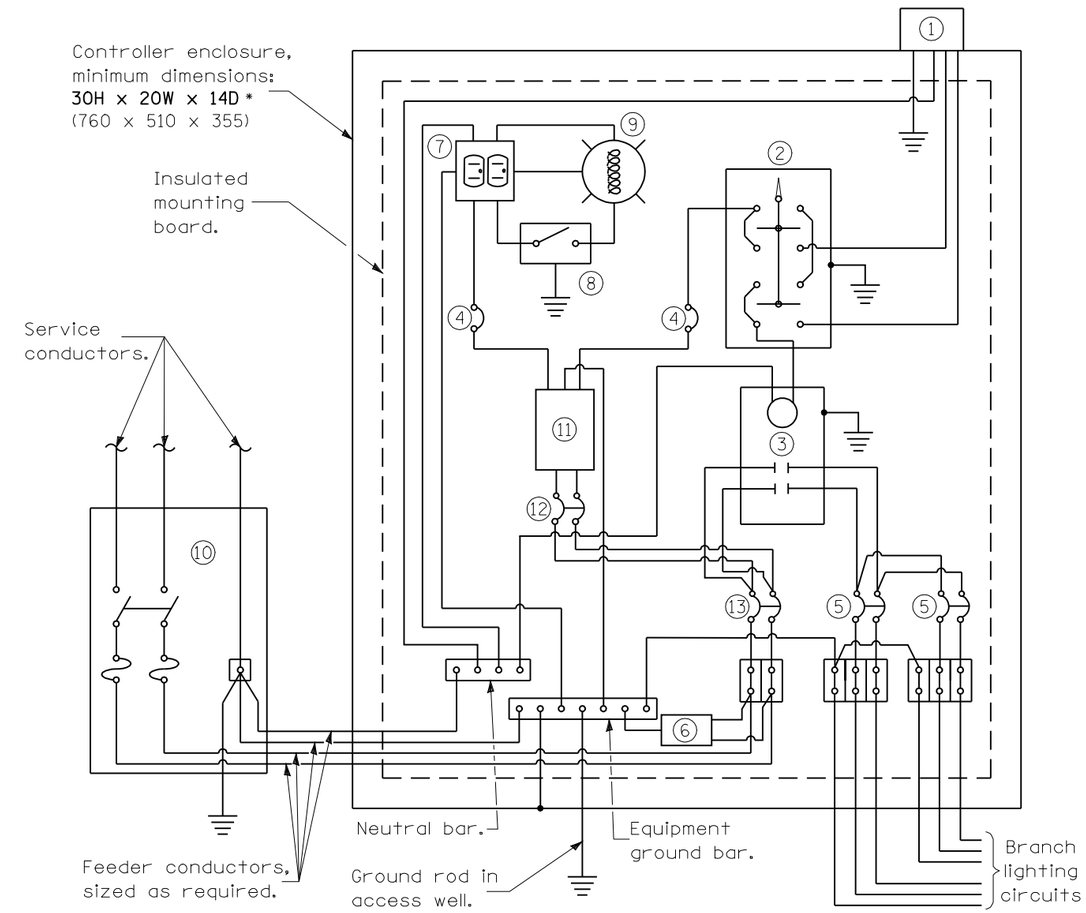

CONTROL SCHEMATIC

1. Photocell with integral surge arrester.
2. HAND-OFF-AUTO selector switch.
3. 60 amp*, electrically held contactor.
4. 15 amp, 1-pole circuit breaker.
5. 20 amp*, 2-pole circuit breaker (two spares required but not shown).
6. Surge arrester.
7. GFCI duplex receptacle.
8. Single-pole, single-throw switch.
9. Incandescent luminaire, enclosed and gasketted with 100 watt lamp.
10. Service disconnect switch - 2-pole, 3-wire, 60 amp*, fused at 60 amp*, solid neutral in NEMA 3R enclosure having lockable external handle.
11. Transformer - 1KVA*, 480V primary, 120/240V secondary, single-phase, 60Hz.
12. 15 amp, 2-pole circuit breaker.
13. 60 amp*, 2-pole circuit breaker.

* Size larger as needed.

All dimensions are in inches (millimeters) unless otherwise shown.

Illinois Department of Transportation

PASSED January 1, 2010
ENGINEER OF PRELIMINARY ENGINEERING
APPROVED January 1, 2010
ENGINEER OF DESIGN AND ENVIRONMENT

ISSUED 1-1-10

DATE	REVISIONS
1-1-10	New standard.

LIGHTING CONTROLLER 480V, PEDESTAL MOUNTED

STANDARD 825016

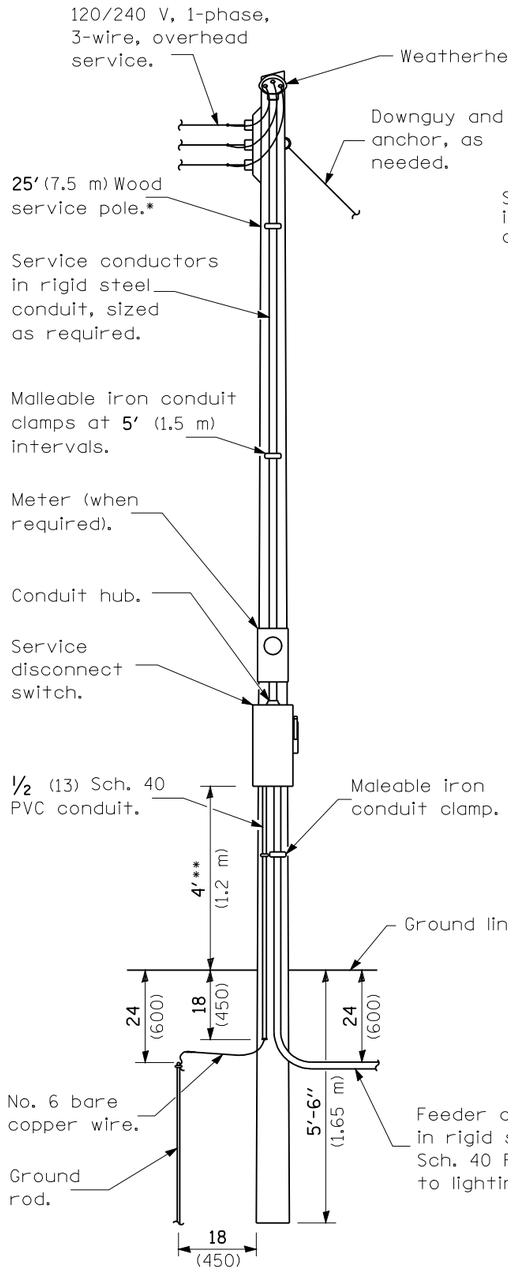

ELECTRIC SERVICE INSTALLATION

** Or as directed by Utility Company.

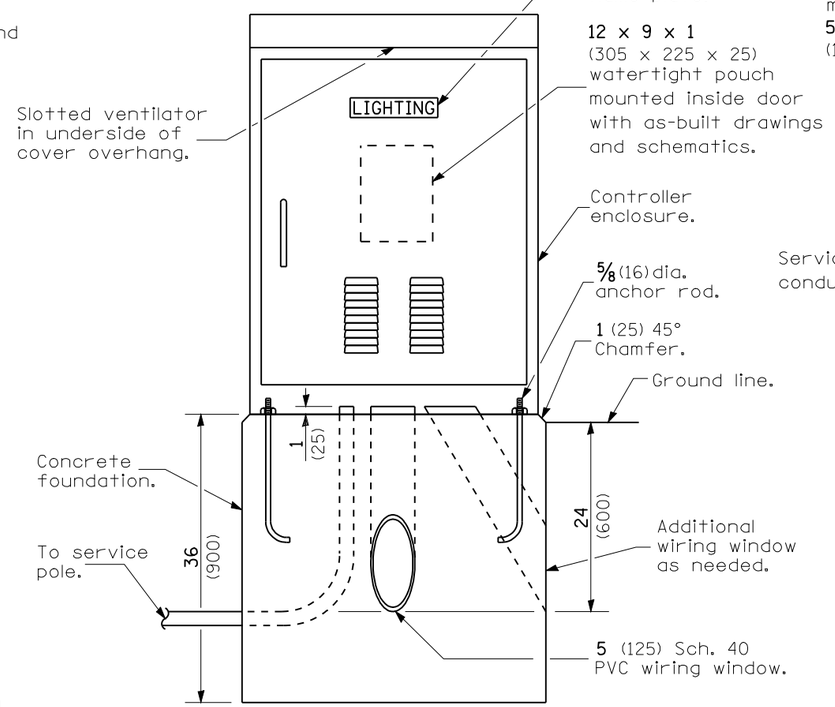

LIGHTING CONTROLLER

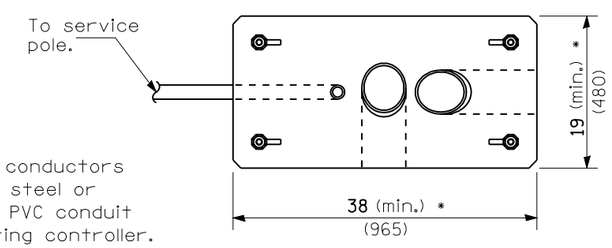

FOUNDATION (PLAN)

(Work pad not shown.)

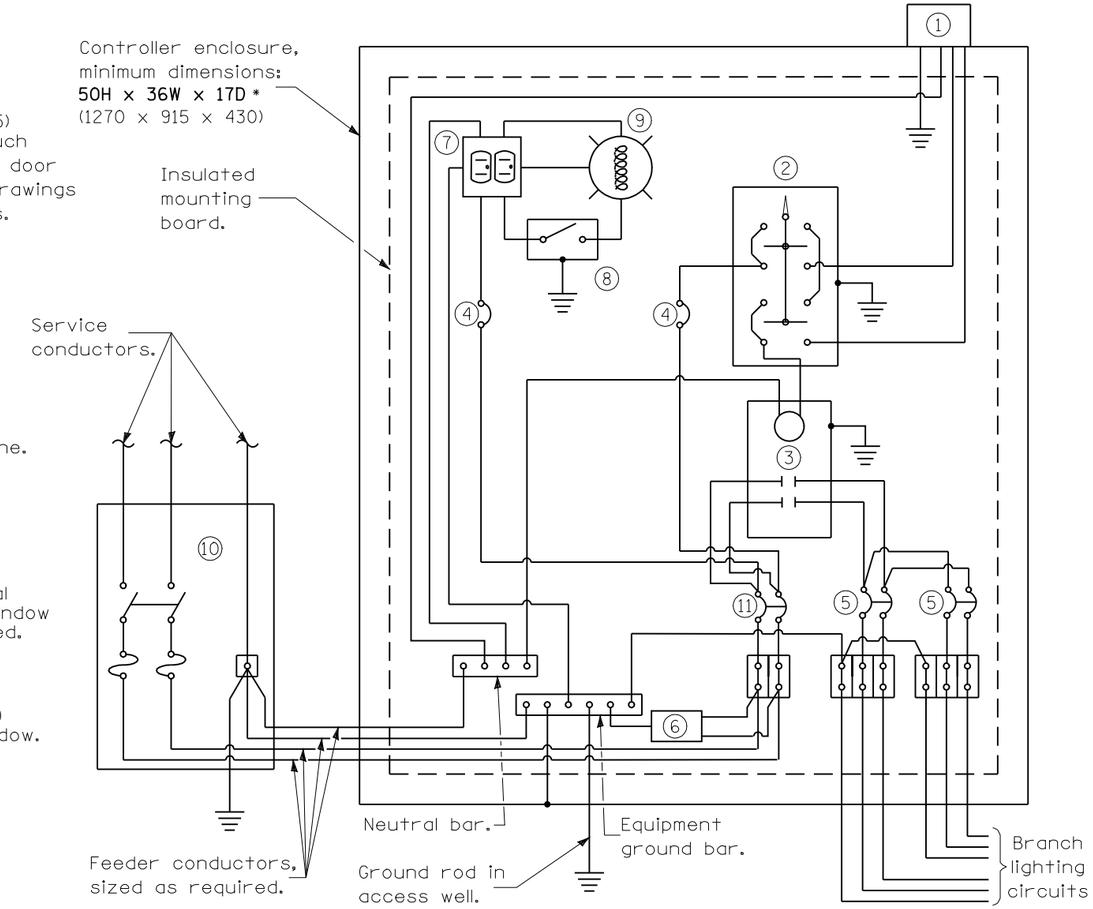

CONTROL SCHEMATIC

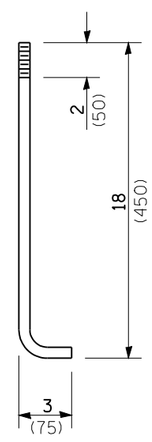

ANCHOR ROD DETAIL

1. Photocell with integral surge arrester.
2. HAND-OFF-AUTO selector switch.
3. 100 amp*, electrically held contactor.
4. 15 amp, 1-pole circuit breaker.
5. 20 amp*, 2-pole circuit breaker (two spares required but not shown).
6. Surge arrester.
7. GFCI duplex receptacle.
8. Single-pole, single-throw switch.
9. Incandescent luminaire, enclosed and gasketted with 100 watt lamp.
10. Service disconnect switch - 2-pole, 3-wire, 100 amp*, fused at 100 amp*, solid neutral in NEMA 3R enclosure having lockable external handle.
11. 100 amp*, 2-pole circuit breaker.

* Size larger as needed.

All dimensions are in inches (millimeters) unless otherwise shown.

Illinois Department of Transportation

PASSED January 1, 2010
ENGINEER OF PRELIMINARY ENGINEERING

APPROVED January 1, 2010
ENGINEER OF DESIGN AND ENVIRONMENT

ISSUED 1-1-10

DATE	REVISIONS
1-1-10	New standard.

LIGHTING CONTROLLER 240V, BASE MOUNTED

STANDARD 825021

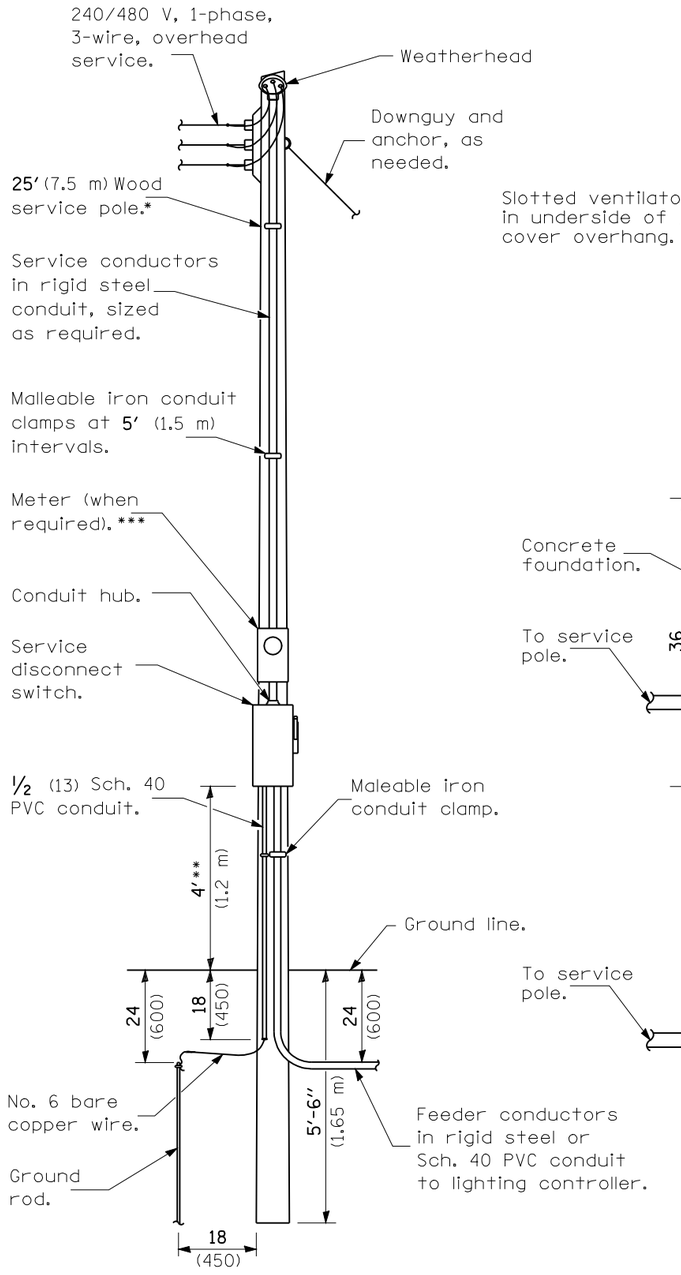

ELECTRIC SERVICE INSTALLATION

** Or as directed by Utility Company.

*** When cold sequencing is required, provide a meter disconnect switch as directed by Utility Company.

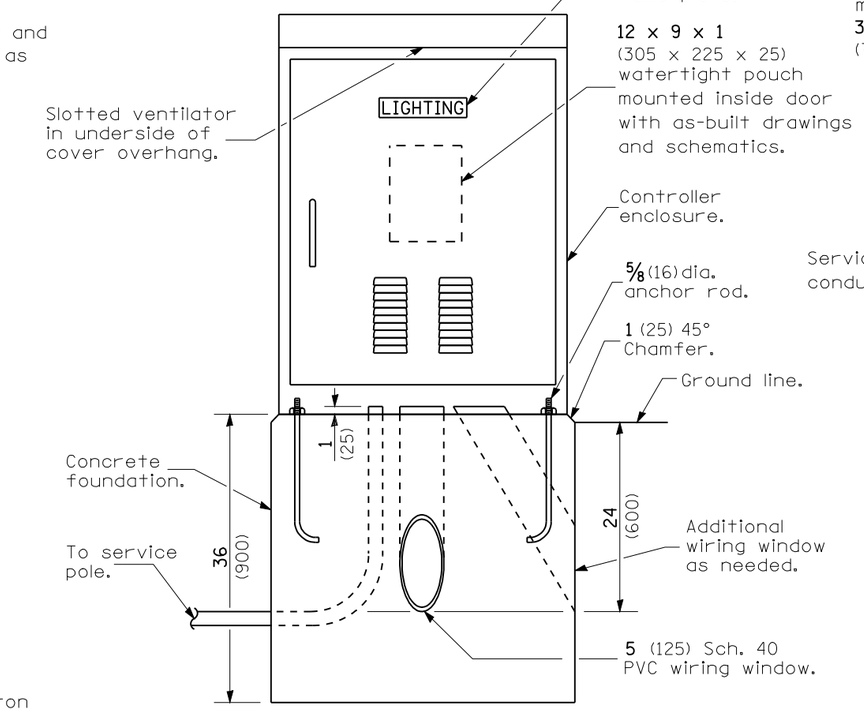

LIGHTING CONTROLLER

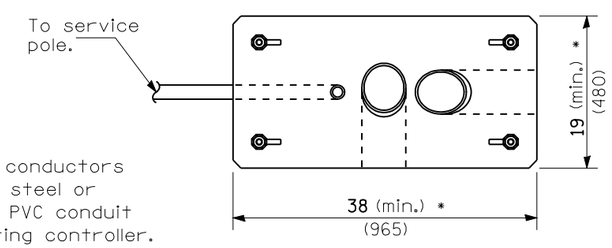

FOUNDATION (PLAN)

(Work pad not shown.)

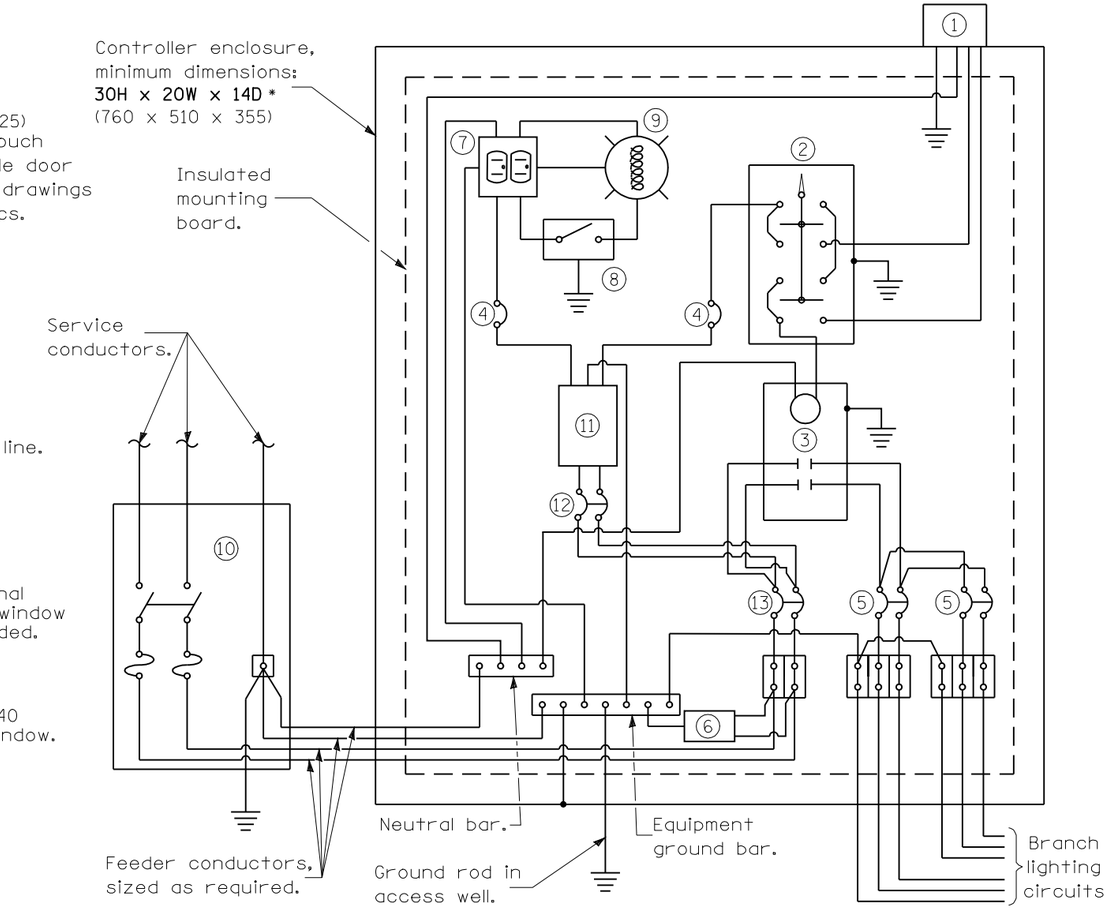

CONTROL SCHEMATIC

1. Photocell with integral surge arrester.
2. HAND-OFF-AUTO selector switch.
3. 100 amp*, electrically held contactor.
4. 15 amp, 1-pole circuit breaker.
5. 20 amp*, 2-pole circuit breaker (two spares required but not shown).
6. Surge arrester.
7. GFCI duplex receptacle.
8. Single-pole, single-throw switch.
9. Incandescent luminaire, enclosed and gasketted with 100 watt lamp.
10. Service disconnect switch - 2-pole, 3-wire, 100 amp*, fused at 100 amp*, solid neutral in NEMA 3R enclosure having lockable external handle.
11. Transformer - 1KVA*, 480V primary, 120/240V secondary, single-phase, 60Hz.
12. 15 amp, 2-pole circuit breaker.
13. 100 amp*, 2-pole circuit breaker.

* Size larger as needed.

All dimensions are in inches (millimeters) unless otherwise shown.

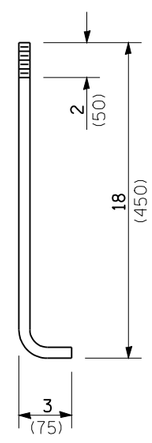

ANCHOR ROD DETAIL

Illinois Department of Transportation

PASSED January 1, 2010
ENGINEER OF PRELIMINARY ENGINEERING

APPROVED January 1, 2010
ENGINEER OF DESIGN AND ENVIRONMENT

ISSUED 1-1-10

DATE	REVISIONS
1-1-10	New standard.

LIGHTING CONTROLLER 480V, BASE MOUNTED

STANDARD 825026

LIGHT POLE MOUNTING HEIGHT	BOLT CIRCLE DIAMETER	METAL FOUNDATION			CONCRETE FOUNDATION		
		SHAFT DIAMETER	SHAFT DEPTH	TOP PLATE (min)	SHAFT DIAMETER	SHAFT DEPTH	ANCHOR ROD LENGTH ①
≤30′ (9.1 m)	11½ (292)	8⅝ (220)	6′ (1.83 m)	12 x 12 x 1 (300 x 300 x 25)	24 (610)	5′-0″ (1.52 m)	4′-9″ (1.45 m)
31′-35′ (9.4 m - 10.7 m)	11½ (292)	8⅝ (220)	6′ (1.83 m)	12 x 12 x 1 (300 x 300 x 25)	24 (610)	5′-6″ (1.67 m)	5′-3″ (1.60 m)
36′-40′ (10.9 m - 12.2 m)	15 (381)③	8⅝ (220)	6′ (1.83 m) ②	15 x 15 x 1¼ (375 x 375 x 31)	30 (762)	6′-0″ (1.83 m)	5′-9″ (1.75 m)
41′-45′ (12.5 m - 13.7 m)	15 (381)③	8⅝ (220)	6′ (1.83 m) ②	15 x 15 x 1¼ (375 x 375 x 31)	30 (762)	6′-6″ (1.98 m)	6′-3″ (1.90 m)
46′-50′ (14.0 m - 15.2 m)	15 (381)③	8⅝ (220)	8′ (2.44 m)	15 x 15 x 1¼ (375 x 375 x 31)	30 (762)	7′-0″ (2.13 m)	6′-9″ (2.00 m)

① Length does not include 4 (100) hook.
② 8⅝ x 8′-0″ (220 x 2.44 m) for twin luminaires.
③ Use the maximum allowable bolt circle diameter (typ. 17(430)) for a transformer base.

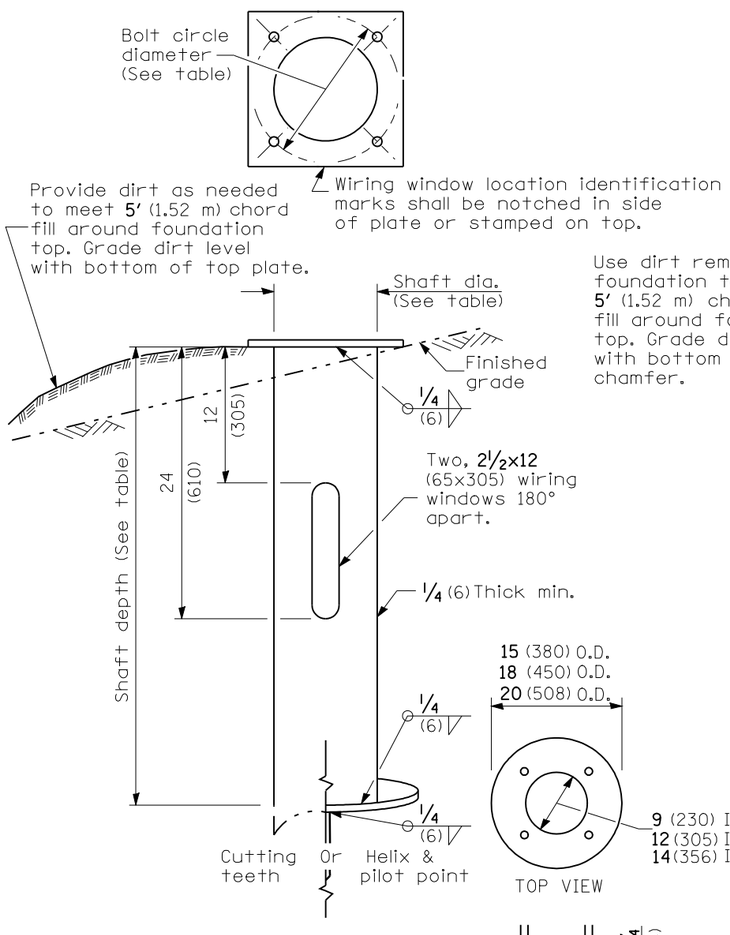

METAL FOUNDATION

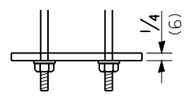

RING PLATE DETAIL

(When rock is encountered and foundation is shallower)

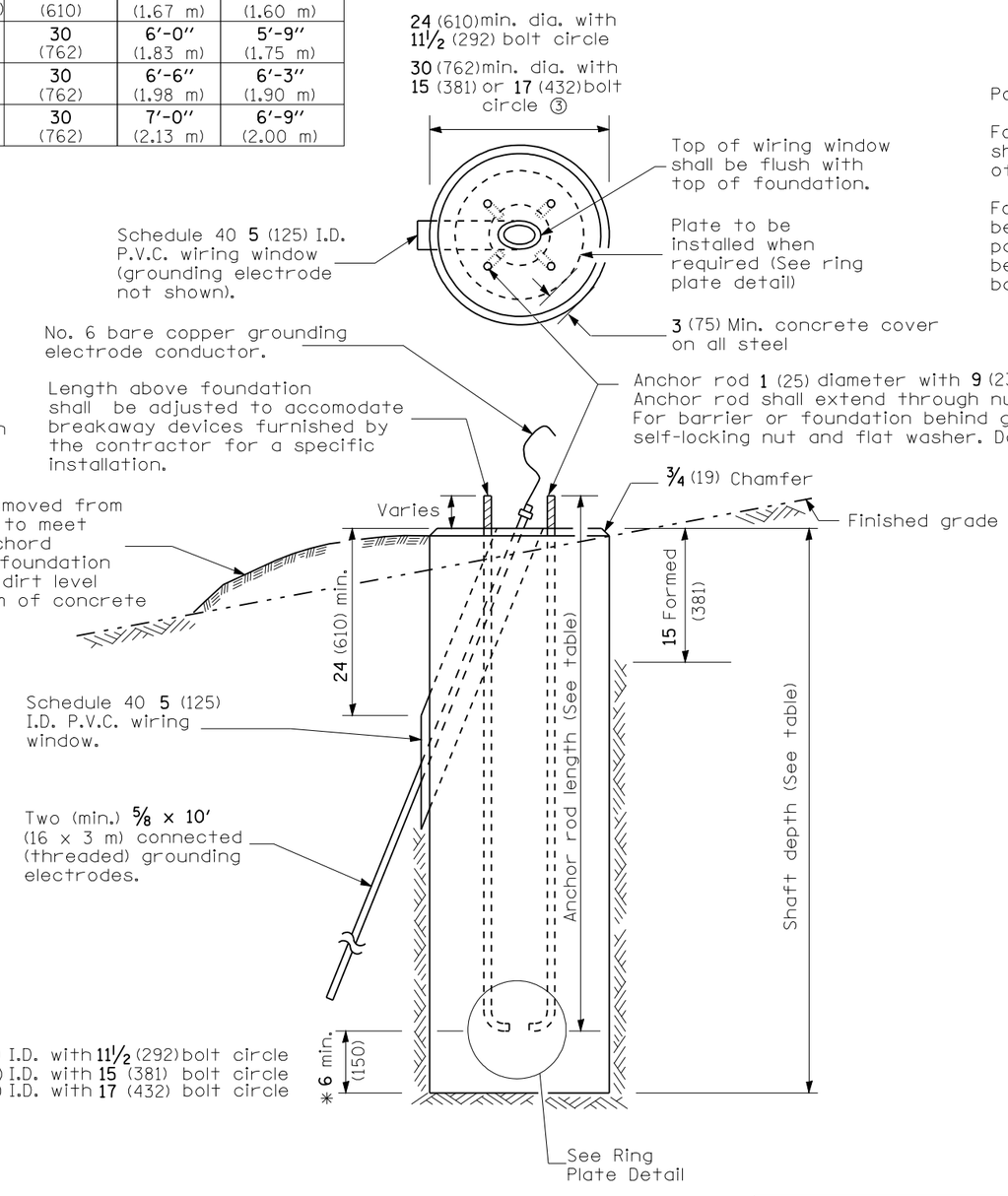

* If the required anchor rod length above top of foundation is less than 3 (75), anchor rods may be lowered below 6 (150).

CONCRETE FOUNDATION

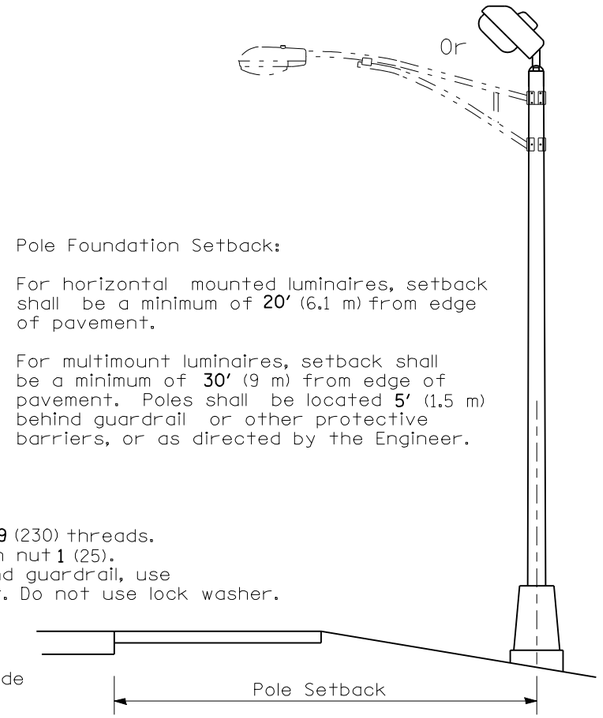

Pole Foundation Setback:

For horizontal mounted luminaires, setback shall be a minimum of 20′ (6.1 m) from edge of pavement.

For multimount luminaires, setback shall be a minimum of 30′ (9 m) from edge of pavement. Poles shall be located 5′ (1.5 m) behind guardrail or other protective barriers, or as directed by the Engineer.

GENERAL NOTES

All foundations are designed to be located on slopes not exceeding 2:1 where soils have an unconfined compressive strength of at least 1.0 TSF. The Contractor shall verify the soil strength during drilling for concrete foundations or by monitoring installation resistance of metal foundations and notify the Engineer if other conditions are encountered.

Anchor rod shall be increased in diameter as needed for 50′ (15.2 m) mounting height or above. The Contractor shall match the breakaway device size or slotted hole size in the pole base plate to accomodate larger rod sizes.

Transformer bases shall not be used on metal foundations.

All dimensions are in inches (millimeters) unless otherwise shown.

Illinois Department of Transportation

PASSED January 1, 2010
ENGINEER OF PRELIMINARY ENGINEERING
APPROVED January 1, 2010
ENGINEER OF DESIGN AND ENVIRONMENT

ISSUED 1-1-10

DATE	REVISIONS
1-1-10	New standard.

LIGHT POLE FOUNDATION

STANDARD 836001

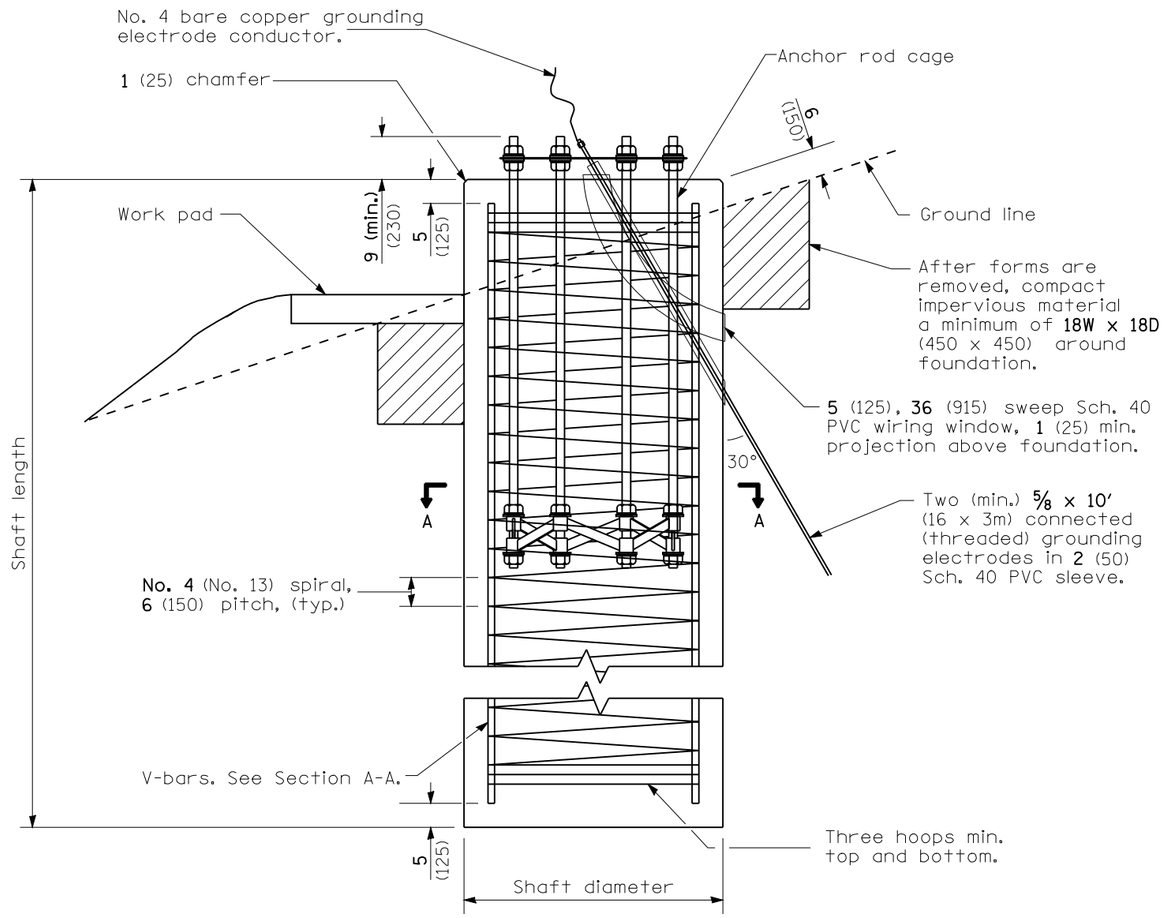

FOUNDATION ELEVATION

SHAFT LENGTH TABLE											
SOIL CONSISTENCY		AVERAGE STRENGTH	LIGHT TOWER HEIGHT								
		Qu in tsf (Qu in kPa)	80' (24 m)	90' (27 m)	100' (30 m)	110' (34 m)	120' (37 m)	130' (40 m)	140' (43 m)	150' (46 m)	160' (49 m)
Cohesive	SOFT	< 0.5 (< 50)	20'-6" (6.2 m)	21'-6" (6.5 m)	22'-6" (6.9 m)	24'-0" (7.2 m)	25'-0" (7.6 m)	26'-6" (8.0 m)	27'-6" (8.3 m)	28'-6" (8.7 m)	30'-0" (9.1 m)
	MEDIUM	0.5 to 1 (50 to 100)	17'-0" (5.1 m)	17'-6" (5.3 m)	18'-6" (5.6 m)	19'-0" (5.8 m)	20'-6" (6.2 m)	21'-6" (6.4 m)	22'-0" (6.7 m)	23'-6" (7.0 m)	24'-0" (7.3 m)
	STIFF	1 to 2 (100 to 200)	14'-6" (4.4 m)	15'-0" (4.5 m)	15'-6" (4.7 m)	16'-0" (4.8 m)	17'-6" (5.2 m)	18'-0" (5.4 m)	18'-6" (5.5 m)	19'-6" (5.9 m)	20'-0" (6.1 m)
	VERY STIFF	2 to 4 (200 to 400)	13'-0" (3.8 m)	13'-0" (3.9 m)	13'-6" (4.1 m)	14'-0" (4.2 m)	15'-0" (4.5 m)	15'-6" (4.6 m)	16'-0" (4.7 m)	17'-0" (5.1 m)	17'-6" (5.2 m)
	HARD	> 4 (> 400)	11'-6" (3.5 m)	12'-0" (3.5 m)	12'-0" 3.6 m)	12'-6" (3.7 m)	13'-6" (4.0 m)	13'-6" (4.1 m)	14'-0" (4.2 m)	15'-0" (4.5 m)	15'-6" (4.6 m)
		N in BLOWS/FT. (N in BLOWS/0.3m)									
Granular	VERY LOOSE	< 5 (< 5)	16'-6" (5.0 m)	17'-6" (5.2 m)	18'-0" (5.4 m)	18'-6" (5.6 m)	19'-0" (5.8 m)	20'-0" (6.0 m)	20'-6" (6.2 m)	21'-0" (6.3 m)	21'-6" (6.5 m)
	LOOSE	5 to 10 (5 to 10)	15'-0" (4.6 m)	16'-0" (4.8 m)	16'-6" (4.9 m)	17'-0" (5.1 m)	17'-6" (5.3 m)	18'-0" (5.5 m)	18'-6" (5.6 m)	19'-0" (5.7 m)	19'-6" (5.9 m)
	MEDIUM	10 to 25 (10 to 25)	14'-6" (4.4 m)	15'-0" (4.5 m)	15'-6" (4.7 m)	16'-0" (4.9 m)	16'-6" (5.0 m)	17'-0" (5.2 m)	17'-6" (5.3 m)	18'-0" (5.5 m)	18'-6" (5.6 m)
	DENSE	25 to 50 (25 to 50)	14'-0" (4.1 m)	14'-6" (4.3 m)	15'-0" (4.5 m)	15'-6" (4.6 m)	15'-6" (4.7 m)	16'-6" (4.9 m)	16'-6" (5.0 m)	17'-0" (5.2 m)	17'-6" (5.3 m)
	VERY DENSE	> 50 (> 50)	13'-0" (3.9 m)	13'-6" (4.1 m)	14'-0" (4.2 m)	14'-6" (4.4 m)	15'-0" (4.5 m)	15'-6" (4.7 m)	16'-0" (4.8 m)	16'-6" (4.9 m)	17'-0" (5.1 m)

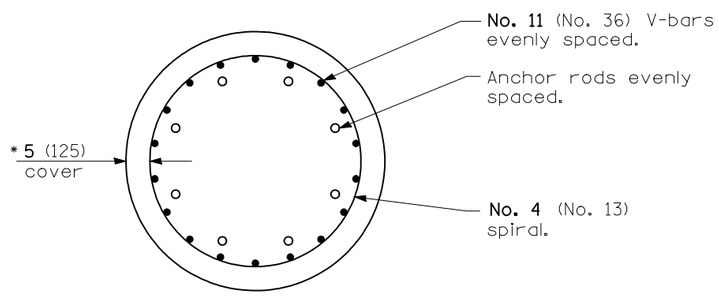

SECTION A-A

* See Rod and Reinforcement Table.

See Sheet 2 for GENERAL NOTES

Illinois Department of Transportation

PASSED January 1, 2010
ENGINEER OF PRELIMINARY ENGINEERING

APPROVED January 1, 2010
ENGINEER OF DESIGN AND ENVIRONMENT

ISSUED 01-1-10

DATE	REVISIONS
1-1-10	New Standard.

LIGHT TOWER FOUNDATION

(Sheet 1 of 2)

STANDARD 837001

ROD AND REINFORCEMENT TABLE					
TOWER HEIGHT	ANCHOR ROD DIAM. (MIN)	ROD CIRCLE DIAM. (MIN)	TOWER BASE DIAM. (MIN)	DRILLED SHAFT DIAM. ①	V BAR QTY.
80′ (25 m)	1½ (38)	30 (760)	24 (610)	4′-0″ (1.2 m)	14
90′ (27 m)	1½ (38)	30 (760)	24 (610)	4′-0″ (1.2 m)	14
100′ (30 m)	1½ (38)	30 (760)	24 (610)	4′-0″ (1.2 m)	14
110′ (34 m)	1½ (38)	30 (760)	24 (610)	4′-0″ (1.2 m)	14
120′ (37 m)	1¾ (44)	36 (915)	26 (660)	4′-6″ (1.4 m)	18
130′ (40 m)	1¾ (44)	36 (915)	28 (710)	4′-6″ (1.4 m)	18
140′ (43 m)	1¾ (44)	36 (915)	28 (710)	4′-6″ (1.4 m)	18
150′ (46 m)	2¼ (57)	38 (965)	30 (760)	5′-0″ (1.5 m)	22
160′ (49 m)	2¼ (57)	38 (965)	32 (810)	5′-0″ (1.5 m)	22

① Diameter based on a 5 (125) conc. cover. The min. cover shall be 3 (75) in dry shaft excavation and 4 (100) in a wet hole. When rock is encountered a 5 (125) cover against soil and a 2 (50) cover against rock shall be required.

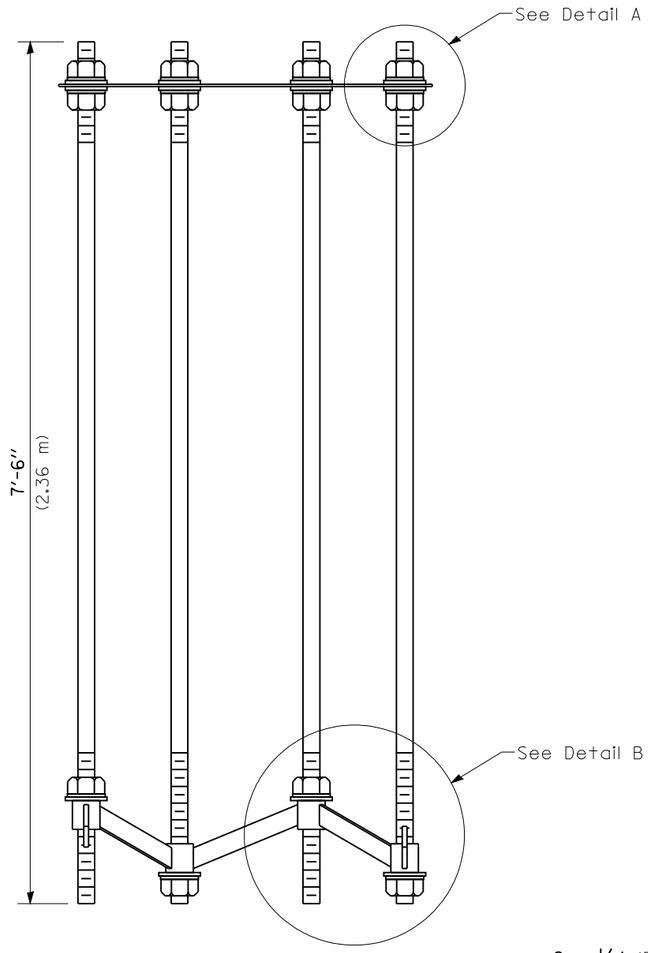

SECTION B-B

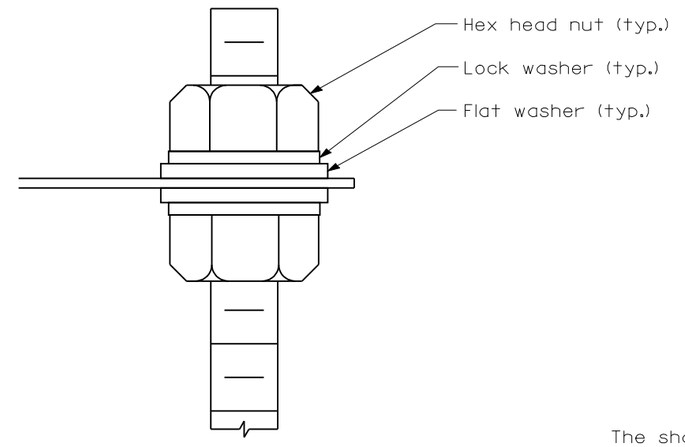

DETAIL A

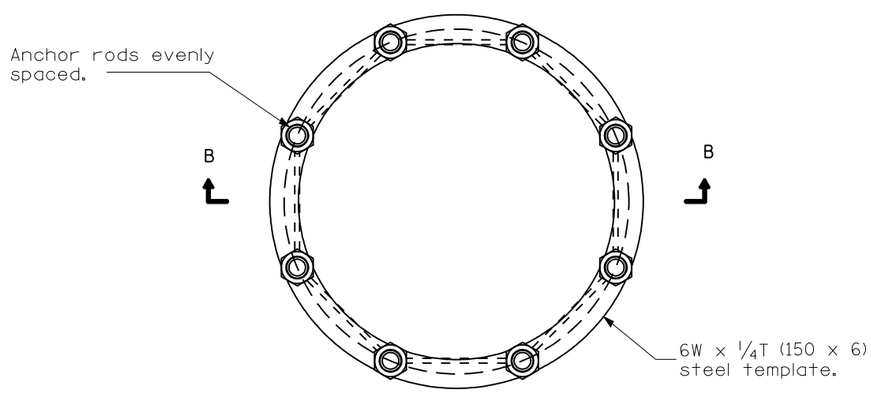

ANCHOR ROD CAGE (PLAN)

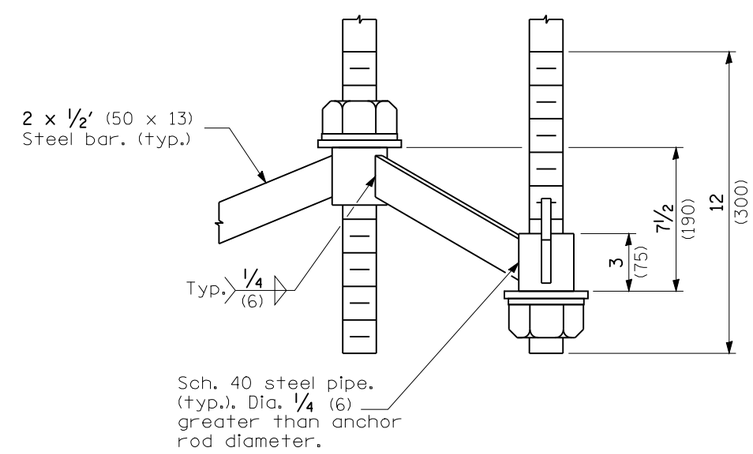

DETAIL B

GENERAL NOTES

The shaft length(s) shall be based on soil borings in the plans. If different soils are encountered, the Engineer shall be notified to provide a revised length.

Anchor rod quantity, diameter, and length shall be determined by the tower manufacturer and approved by the Engineer. Each foundation shall have a minimum of 8 anchor rods.

Coordinate the rod circle diameter of the tower with the diameter of the anchor rod cage.

All foundation reinforcement steel shall be epoxy coated.

The cost of reinforcement shall be included in the cost of the foundation.

Steel anchor rod forms shall not be removed for a minimum of 3 days after concrete is poured. The tower shall not be set for a minimum of 7 days or as approved by the Engineer.

The foundation shall be poured monolithically and shall have no construction joints.

Grounding electrodes shall be installed in an access well when there is a conflict in using the method shown.

All dimensions are in inches (millimeters) unless otherwise shown.

Illinois Department of Transportation

PASSED January 1, 2010
ENGINEER OF PRELIMINARY ENGINEERING

APPROVED January 1, 2010
ENGINEER OF DESIGN AND ENVIRONMENT

ISSUED 1-1-10

LIGHT TOWER FOUNDATION

(Sheet 2 of 2)

STANDARD 837001

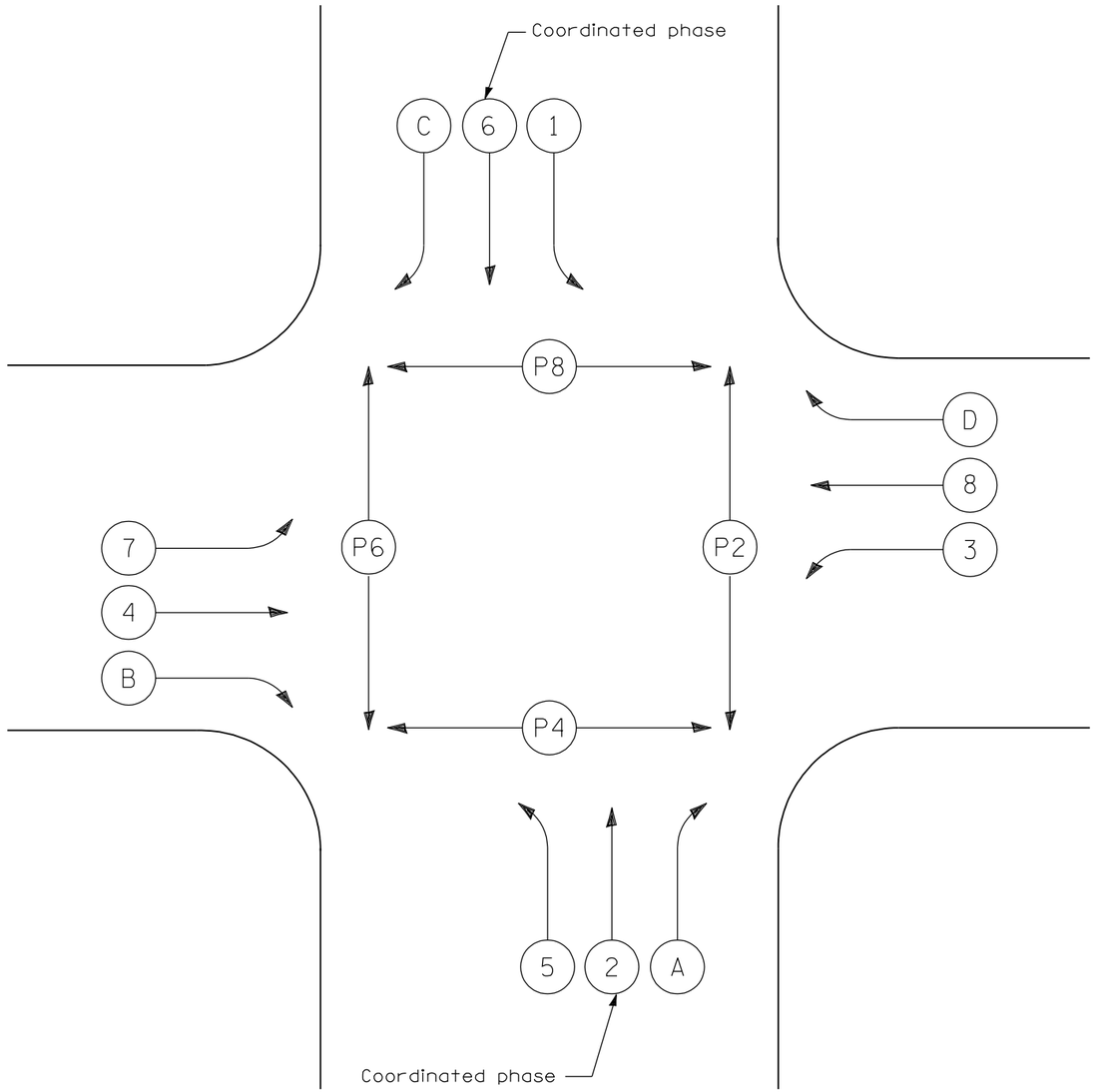

STANDARD PHASE DESIGNATION DIAGRAM (NEMA)

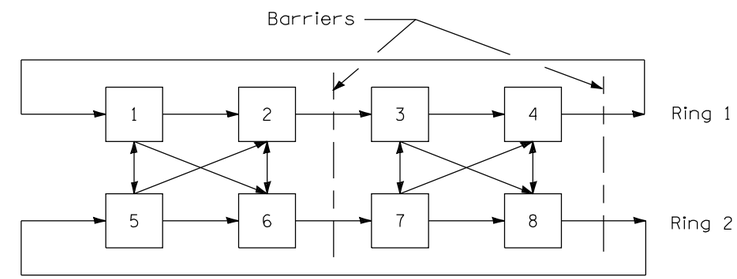

NEMA EIGHT PHASE DUAL RING
ACTUATED CONFIGURATION

LEGEND

(X) , [X]	Vehicular phase no. x
(PX)	Pedestrian phase no. x
(A), (B), (C), (D)	Right turn overlaps where:
(A) = (2) + (3)	
(B) = (4) + (5)	
(C) = (6) + (7)	
(D) = (8) + (1)	
NEMA	National Electrical Manufacturers Association

Illinois Department of Transportation

APPROVED January 1, 2009
ENGINEER OF OPERATIONS
APPROVED January 1, 2009
ENGINEER OF DESIGN AND ENVIRONMENT

ISSUED 1-1-97

DATE	REVISIONS
1-1-09	Omitted note regarding units of length.
1-1-97	Renum. Standard 2393-2.

STANDARD PHASE DESIGNATION DIAGRAMS AND PHASE SEQUENCES
(Sheet 1 of 2)

STANDARD 857001-01

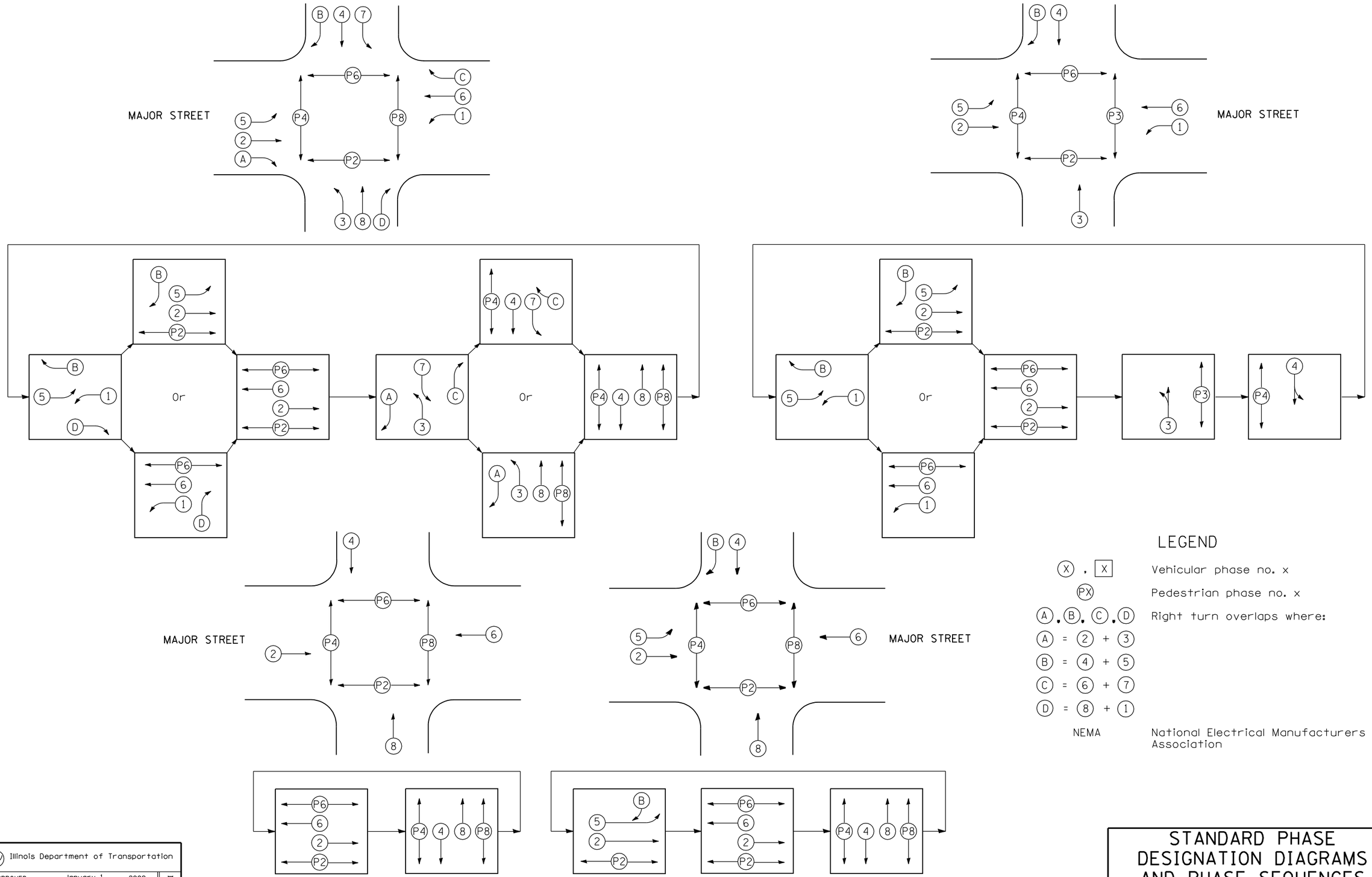

LEGEND

(X) , [X]	Vehicular phase no. x
(PX)	Pedestrian phase no. x
(A), (B), (C), (D)	Right turn overlaps where:
(A) = (2) + (3)	
(B) = (4) + (5)	
(C) = (6) + (7)	
(D) = (8) + (1)	
NEMA	National Electrical Manufacturers Association

PHASE DESIGNATION DIAGRAMS AND CORRESPONDING PHASE SEQUENCES

Illinois Department of Transportation

APPROVED January 1, 2009
ENGINEER OF OPERATIONS

APPROVED January 1, 2009
ENGINEER OF DESIGN AND ENVIRONMENT

ISSUED 1-1-97

STANDARD PHASE DESIGNATION DIAGRAMS AND PHASE SEQUENCES

(Sheet 2 of 2)

STANDARD 857001-01

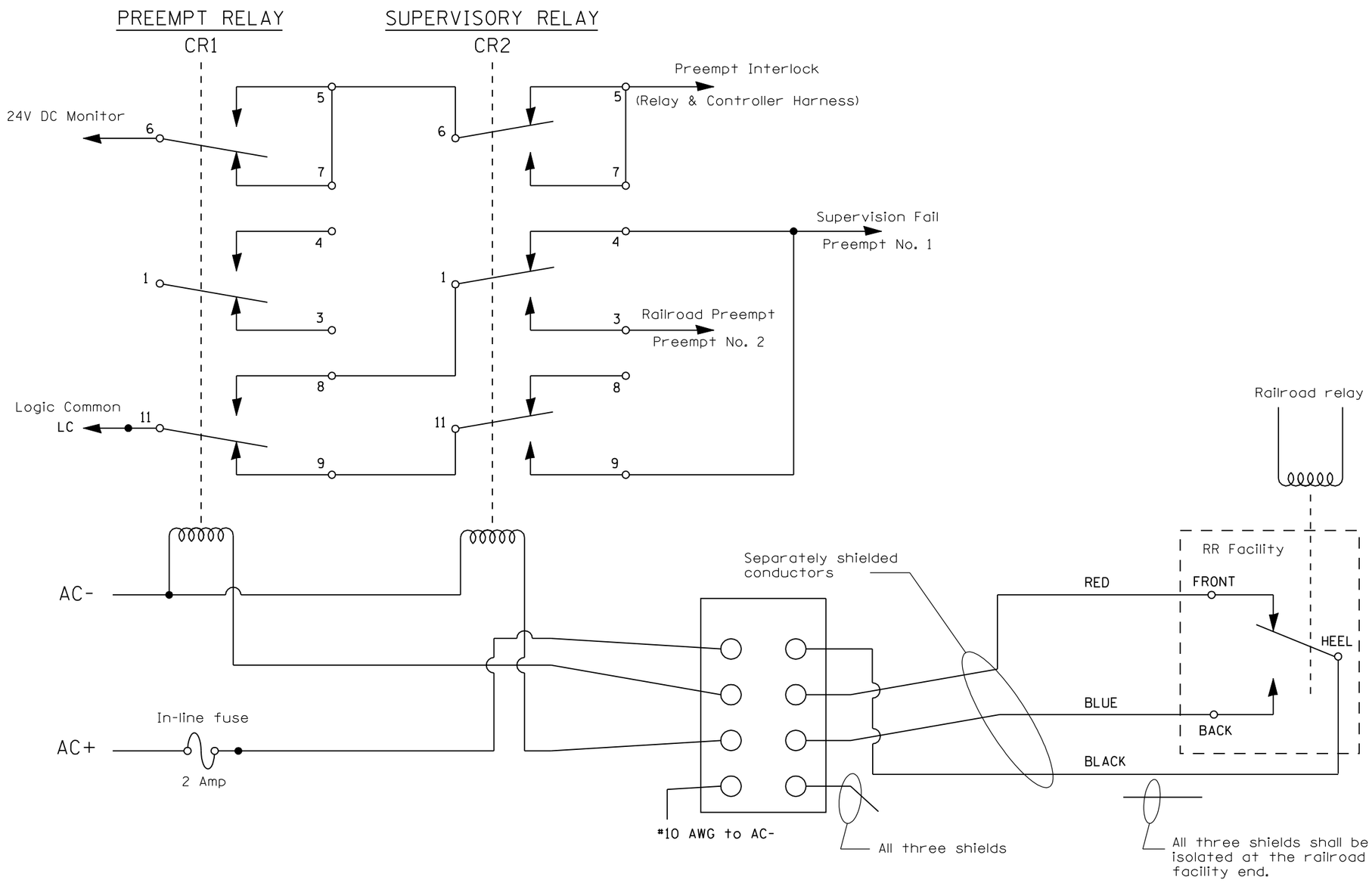

RELAYS IN NON-PREEMPT STATE - RAILROAD AND PREEMPT RELAYS ENERGIZED

GENERAL NOTES

CR1 and CR2 are 120VAC 3PDT Relays.

Supervision Fail is Preempt No. 1, causing traffic signal controller to implement all-red flash following track clearance phase.

Railroad Preempt is Preempt No. 2, causing traffic signal controller to implement railroad preemption routine following 1 second delay.

Preempt No. 1 and Preempt No. 2 shall have priority over all other preempts. The railroad preemption routine shall abbreviate each and all active pedestrian phases by immediately entering into flashing DON'T WALK and timing concurrently with the associated vehicle yellow change interval.

Illinois Department of Transportation

APPROVED January 1, 2009
ENGINEER OF OPERATIONS

APPROVED January 1, 2009
ENGINEER OF DESIGN AND ENVIRONMENT

ISSUED 1-1-04

DATE	REVISIONS
1-1-09	Omitted note regarding units of length.
1-1-04	New Standard.

SUPERVISED RAILROAD INTERCONNECT CIRCUIT

STANDARD 857006-01

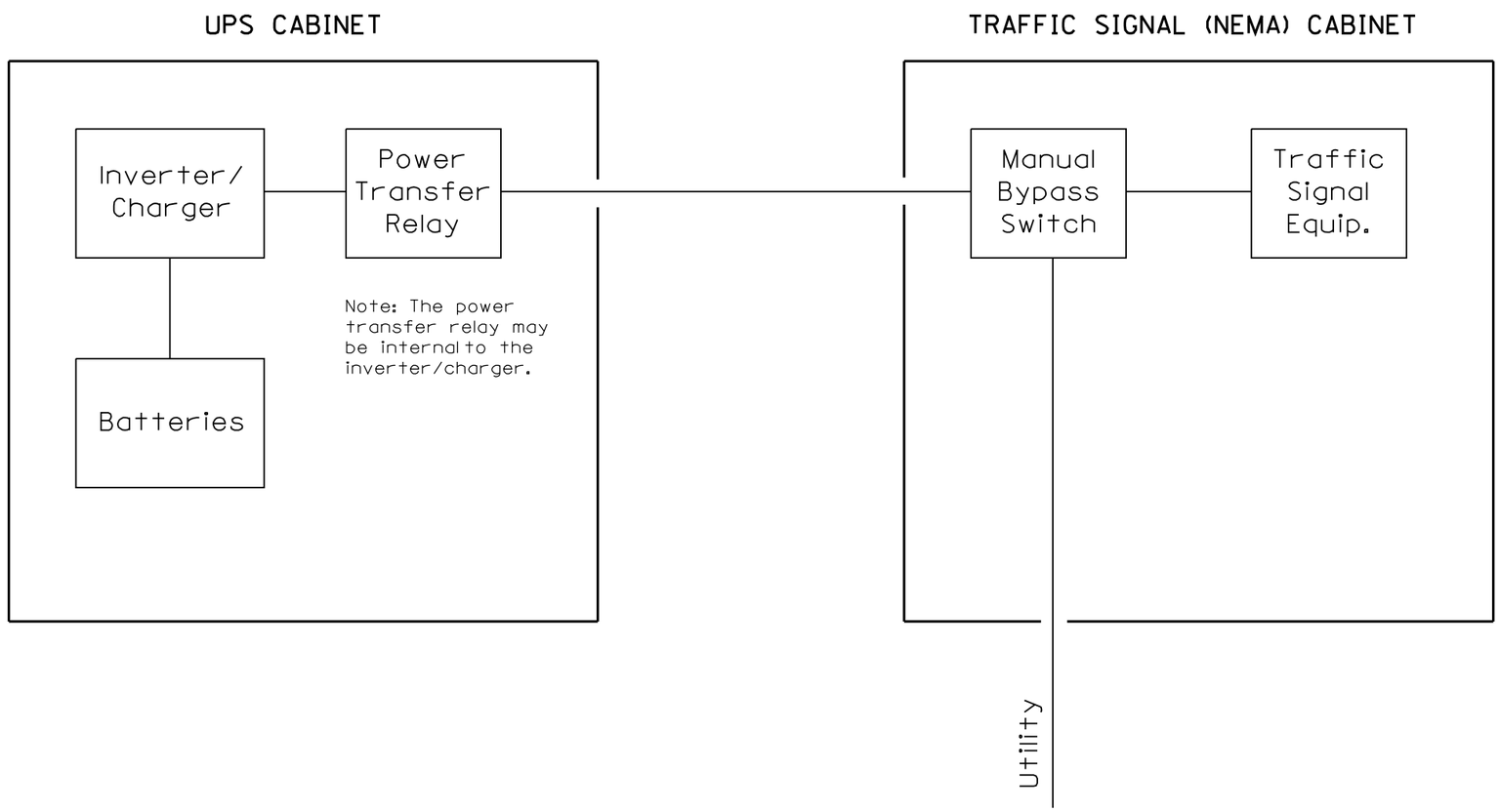

Note: The power transfer relay may be internal to the inverter/charger.

SINGLE LINE BLOCK DIAGRAM

Illinois Department of Transportation

APPROVED January 1, 2009
ENGINEER OF OPERATIONS

APPROVED January 1, 2009
ENGINEER OF DESIGN AND ENVIRONMENT

ISSUED 4-1-06

DATE	REVISIONS
1-1-09	Omitted note regarding units of length.
4-1-06	New Standard

UNINTERRUPTABLE POWER SUPPLY (UPS)

STANDARD 862001-01

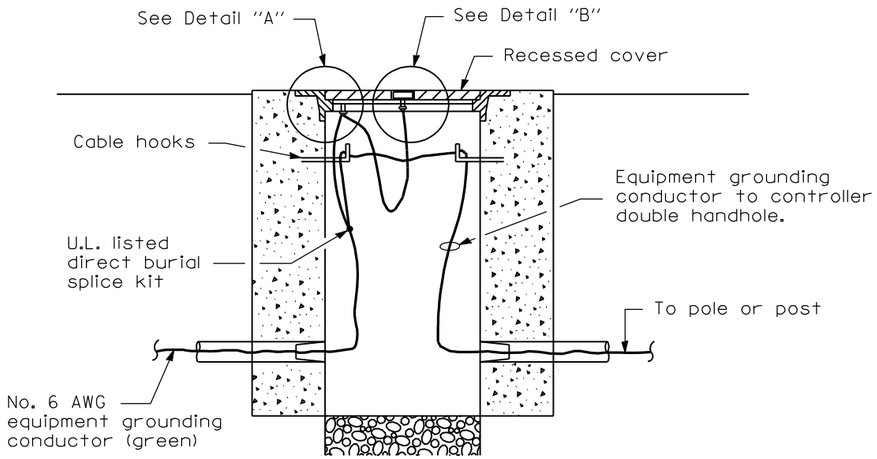

BONDING A HANDHOLE COVER & FRAME

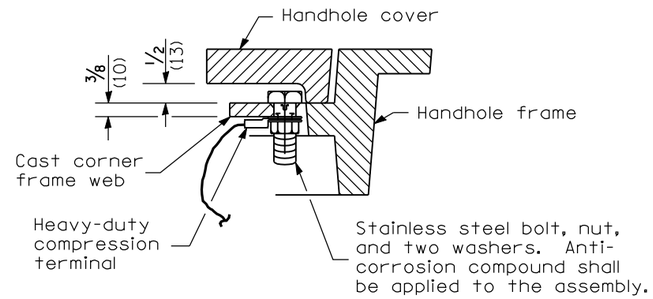

DETAIL "A"

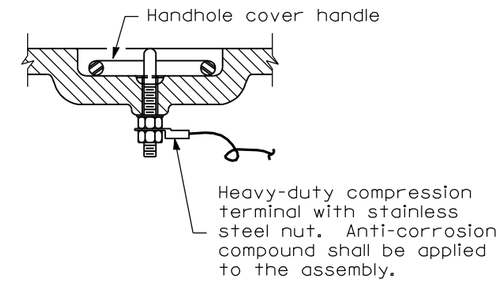

DETAIL "B"

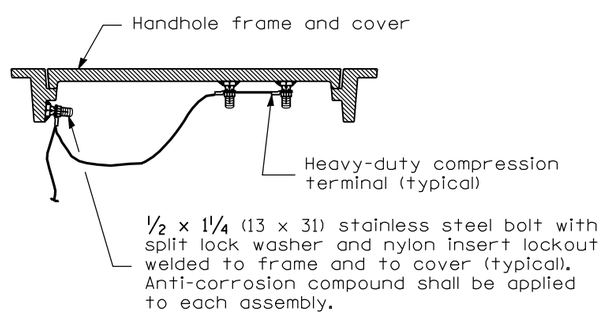

BONDING AN EXISTING HANDHOLE COVER & FRAME

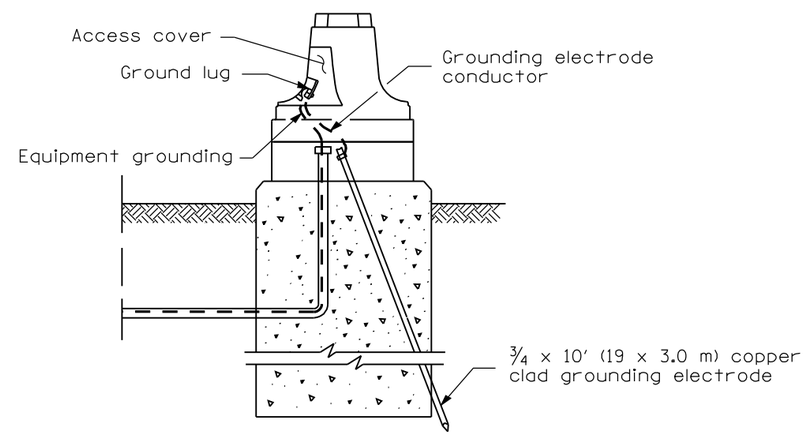

GROUNDING A MAST ARM POLE/POST

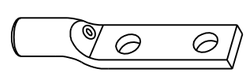

HEAVY-DUTY COMPRESSION TERMINAL

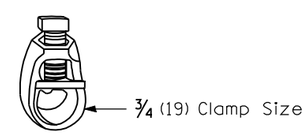

HEAVY-DUTY GROUND ROD CLAMP

All dimensions are in inches (millimeters) unless otherwise shown.

Illinois Department of Transportation

APPROVED January 1, 2009
ENGINEER OF OPERATIONS

APPROVED January 1, 2009
ENGINEER OF DESIGN AND ENVIRONMENT

ISSUED 4-1-96

DATE	REVISIONS
1-1-09	Switched units to English (metric).
1-1-07	Revised terminology.

TRAFFIC SIGNAL GROUNDING & BONDING

STANDARD 873001-02

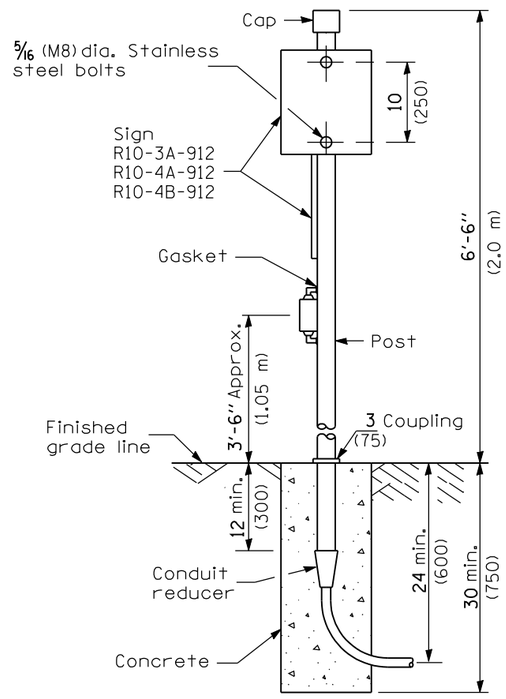

PEDESTRIAN PUSH BUTTON POST

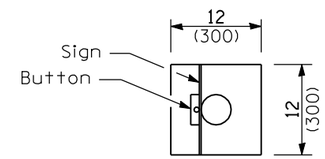

TOP VIEW
TYPICAL ONE BUTTON

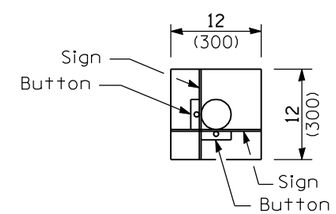

TOP VIEW
TYPICAL TWO BUTTONS

All dimensions are in inches (millimeters) unless otherwise shown.

Illinois Department of Transportation

APPROVED January 1, 2009
ENGINEER OF OPERATIONS

APPROVED January 1, 2009
ENGINEER OF DESIGN AND ENVIRONMENT

ISSUED 1-1-07

DATE	REVISIONS
1-1-09	Switched units to English (metric).
1-1-07	New Standard. Used to be part of Standard 878001.

PEDESTRIAN PUSH BUTTON POST

STANDARD 876001-01

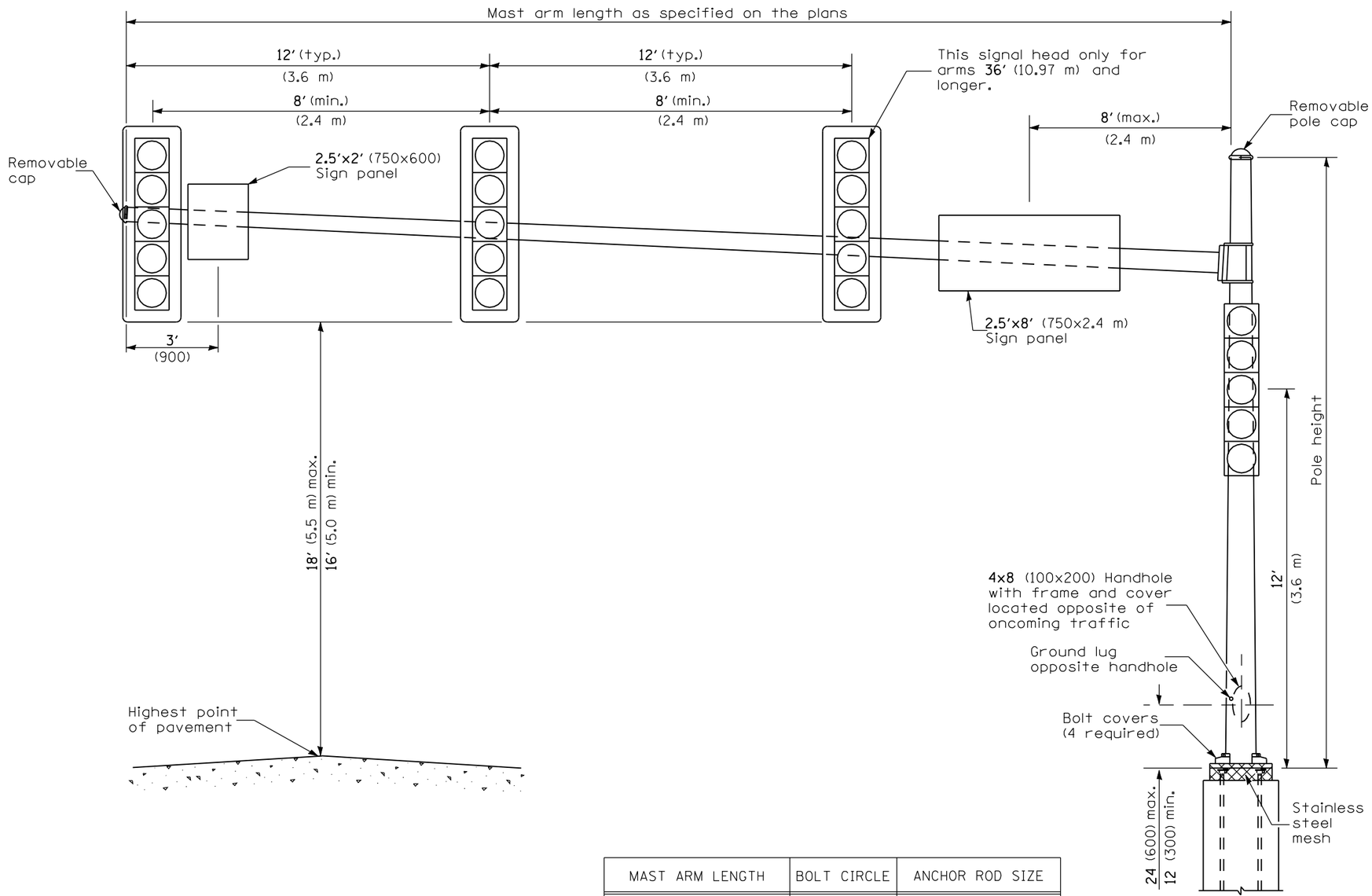

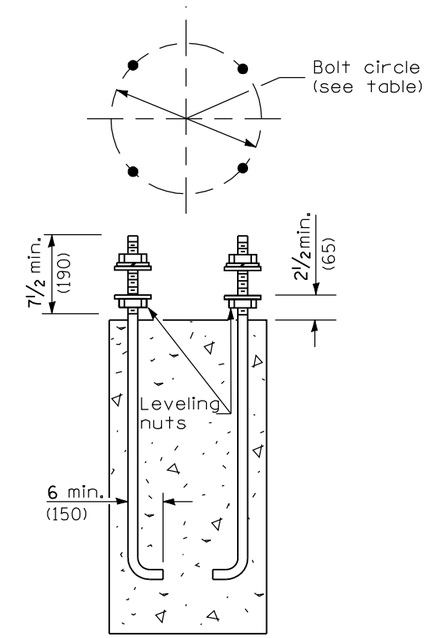

ANCHOR ROD DETAIL

MAST ARM LENGTH	BOLT CIRCLE	ANCHOR ROD SIZE
16′ thru 20′ (4.87 m thru 6.10 m)	15 (380)	1½ x 5′ (38 x 1.5 m)
22′ thru 30′ (6.71 m thru 9.14 m)	18 (450)	1½ x 5′ (38 x 1.5 m)
32′ thru 40′ (9.75 m thru 12.20 m)	18 (450)	1¾ x 7′ (44 x 2.10 m)
42′ thru 55′ (12.80 m thru 16.80 m)	21 (535)	1¾ x 7′ (44 x 2.10 m)

GENERAL NOTES

Signal heads, sign panels, and other attachments are shown for minimum design loading purposes only. Each signal head shall weigh 80 lb (36 kg) and have a projected area of 14.7 sq. ft. (1.37 sq. m).

All dimensions are in inches (millimeters) unless otherwise shown.

DATE	REVISIONS
1-1-09	Switched units to English (metric).
1-1-08	Renamed standard.

STEEL MAST ARM ASSEMBLY AND POLE 16′ THROUGH 55′

STANDARD 877001-04

Illinois Department of Transportation

APPROVED January 1, 2009
ENGINEER OF OPERATIONS

APPROVED January 1, 2009
ENGINEER OF DESIGN AND ENVIRONMENT

ISSUED 1-1-02

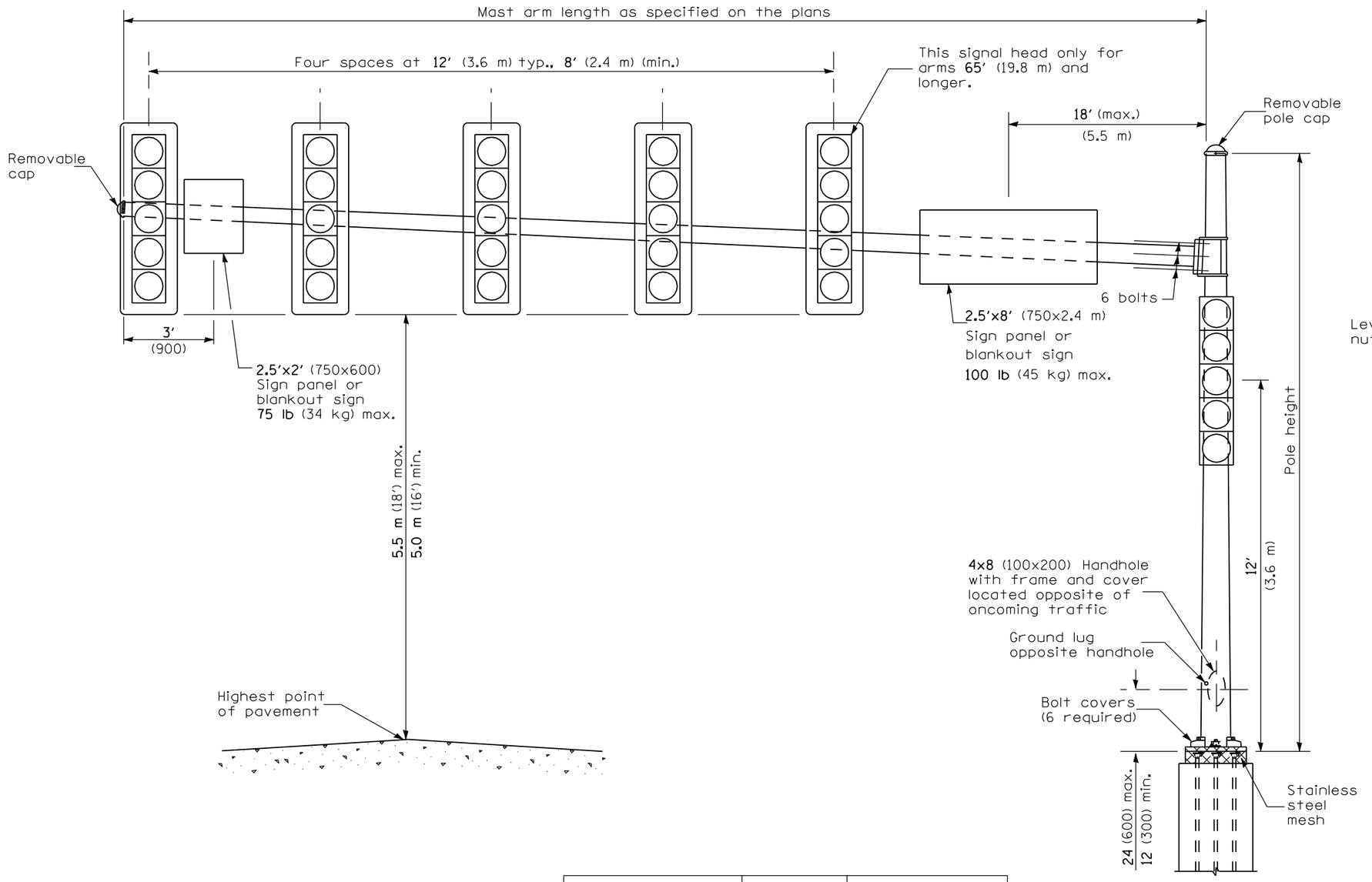

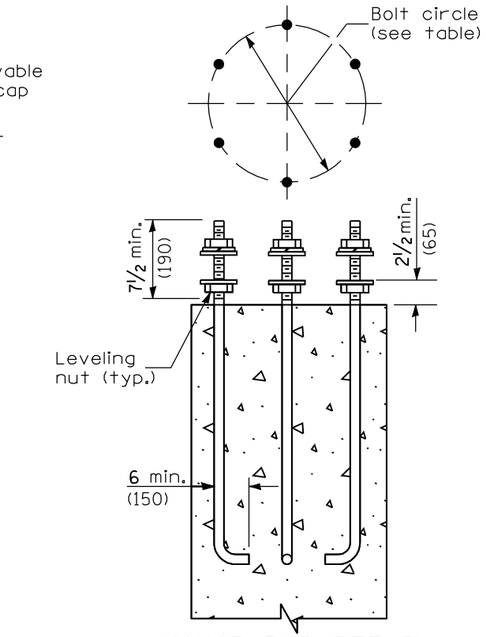

ANCHOR ROD DETAIL

MAST ARM LENGTH	BOLT CIRCLE	ANCHOR ROD SIZE
56′ thru 64′ (17.1 m thru 19.8 m)	24 (610)	1¾ x 7′ (44 x 2.10 m)
65′ thru 75′ (20.1 m thru 22.9 m)	27 (686)	2 x 7′-6″ (51 x 2.30 m)

GENERAL NOTES

Signal heads, sign panels, and other attachments are shown for minimum design loading purposes only. Each signal head shall weigh 80 lbs. (36 kg) and have a projected area of 14.7 sq. ft. (1.37 sq. m).

All dimensions are in inches (millimeters) unless otherwise shown.

DATE	REVISIONS
1-1-09	Switched units to English (metric).
1-1-08	New standard.

STEEL MAST ARM ASSEMBLY AND POLE 56′ THROUGH 75′

STANDARD 877002-01

Illinois Department of Transportation

APPROVED January 1, 2009
ENGINEER OF OPERATIONS

APPROVED January 1, 2009
ENGINEER OF DESIGN AND ENVIRONMENT

ISSUED 1-1-08

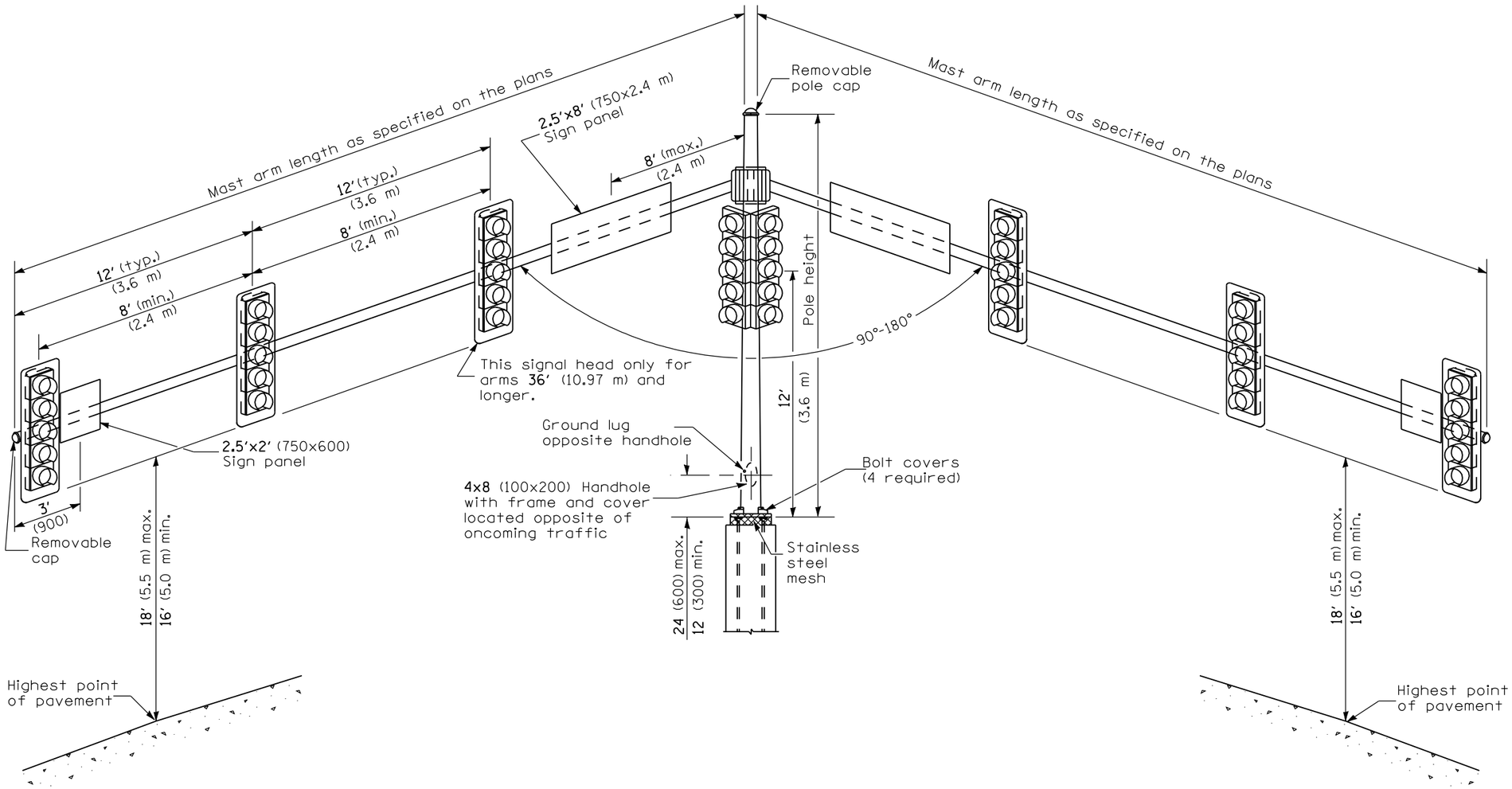

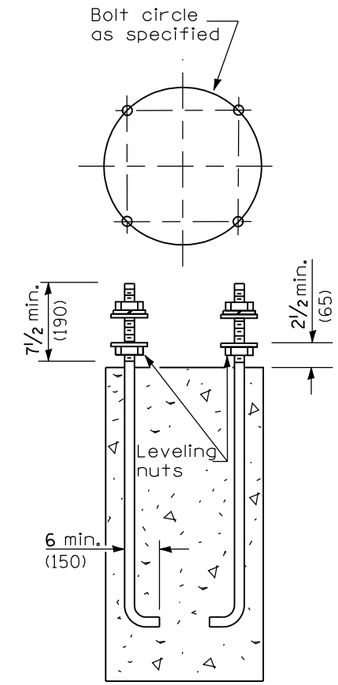

ANCHOR ROD DETAIL

MAST ARM LENGTH	BOLT CIRCLE	ANCHOR ROD SIZE
16' thru 20' (4.87 m thru 6.10 m)	18 (450)	1½ x 5' (38 x 1.5 m)
22' thru 30' (6.71 m thru 9.14 m)	18 (450)	1¾ x 7' (44 x 2.10 m)
32' thru 38' (9.75 m thru 11.60 m)	18 (450)	2 x 7'-6" (51 x 2.30 m)
40' thru 55' (12.20 m thru 16.80 m)	21 (535)	2 x 7'-6" (51 x 2.30 m)

GENERAL NOTES

Signal heads, sign panels, and other attachments are shown for minimum design loading purposes only. Each signal head shall weigh 80 lb (36 kg) and have a projected area of 14.7 sq. ft. (1.37 sq. m).

All dimensions are in inches (millimeters) unless otherwise shown.

Illinois Department of Transportation

APPROVED January 1, 2009
ENGINEER OF OPERATIONS

APPROVED January 1, 2009
ENGINEER OF DESIGN AND ENVIRONMENT

ISSUED 1-1-02

DATE	REVISIONS
1-1-09	Switched units to
	English (metric).
1-1-05	Revised sign panel,
	handhole, arm angle,
	and table.

STEEL MAST ARM ASSEMBLY AND POLE WITH DUAL MAST ARMS

STANDARD 877006-03

TENON TOP FOR VERTICAL MOUNTED LUMINAIRES

Note: The tenon top shall support a bullhorn fitting with two (twin) vertically mounted luminaires (clamp-mounted bullhorn assembly with removable pole cap acceptable). Each luminaire shall weigh 100 lb (45 kg) and have an effective projected (EPA) area of 3.85 sq. ft. (0.36 sq. m).

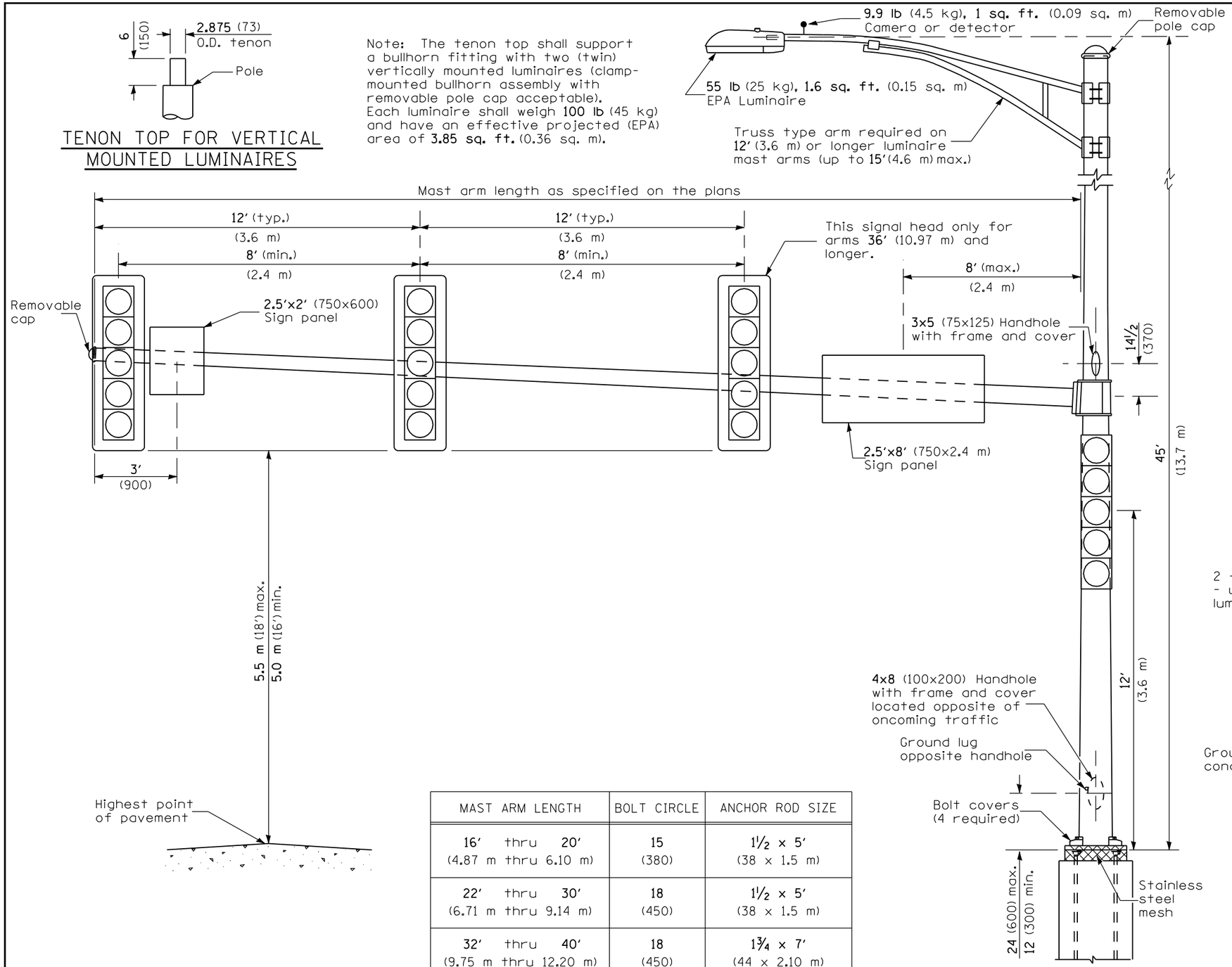

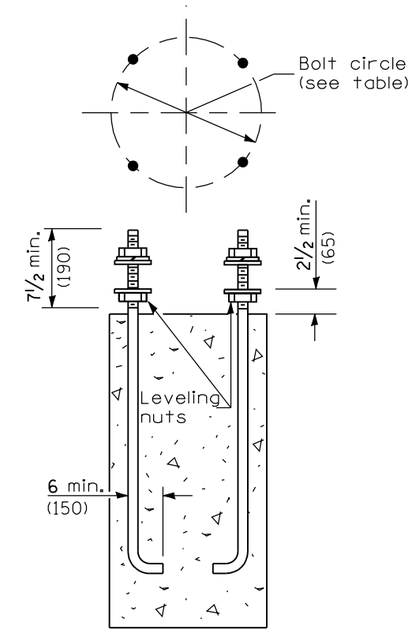

ANCHOR ROD DETAIL

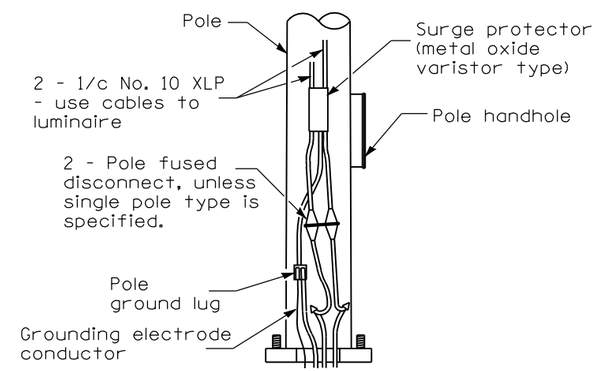

POLE BASE DETAIL

MAST ARM LENGTH	BOLT CIRCLE	ANCHOR ROD SIZE
16′ thru 20′ (4.87 m thru 6.10 m)	15 (380)	1½ x 5′ (38 x 1.5 m)
22′ thru 30′ (6.71 m thru 9.14 m)	18 (450)	1½ x 5′ (38 x 1.5 m)
32′ thru 40′ (9.75 m thru 12.20 m)	18 (450)	1¾ x 7′ (44 x 2.10 m)
42′ thru 55′ (12.80 m thru 16.80 m)	21 (535)	1¾ x 7′ (44 x 2.10 m)

GENERAL NOTES

Signal heads, sign panels, and other attachments are shown for minimum design loading purposes only. Each signal head shall weigh 80 lb (36 kg) and have a projected area of 14.7 sq. ft. (1.37 sq. m).

All dimensions are in inches (millimeters) unless otherwise shown.

Illinois Department of Transportation

APPROVED January 1, 2009
ENGINEER OF OPERATIONS

APPROVED January 1, 2009
ENGINEER OF DESIGN AND ENVIRONMENT

ISSUED 1-1-02

DATE	REVISIONS
1-1-09	Switched units to English (metric).
1-1-08	Renamed standard.

STEEL COMB. MAST ARM ASSEMBLY AND POLE 16′ THROUGH 55′

STANDARD 877011-04

TENON TOP FOR VERTICAL MOUNTED LUMINAIRES

Note: The tenon top shall support a bullhorn fitting with two (twin) vertically mounted luminaires (clamp-mounted bullhorn assembly with removable pole cap acceptable). Each luminaire shall weigh 100 lb (45 kg) and have an effective projected (EPA) area of 3.85 sq. ft. (0.36 sq. m).

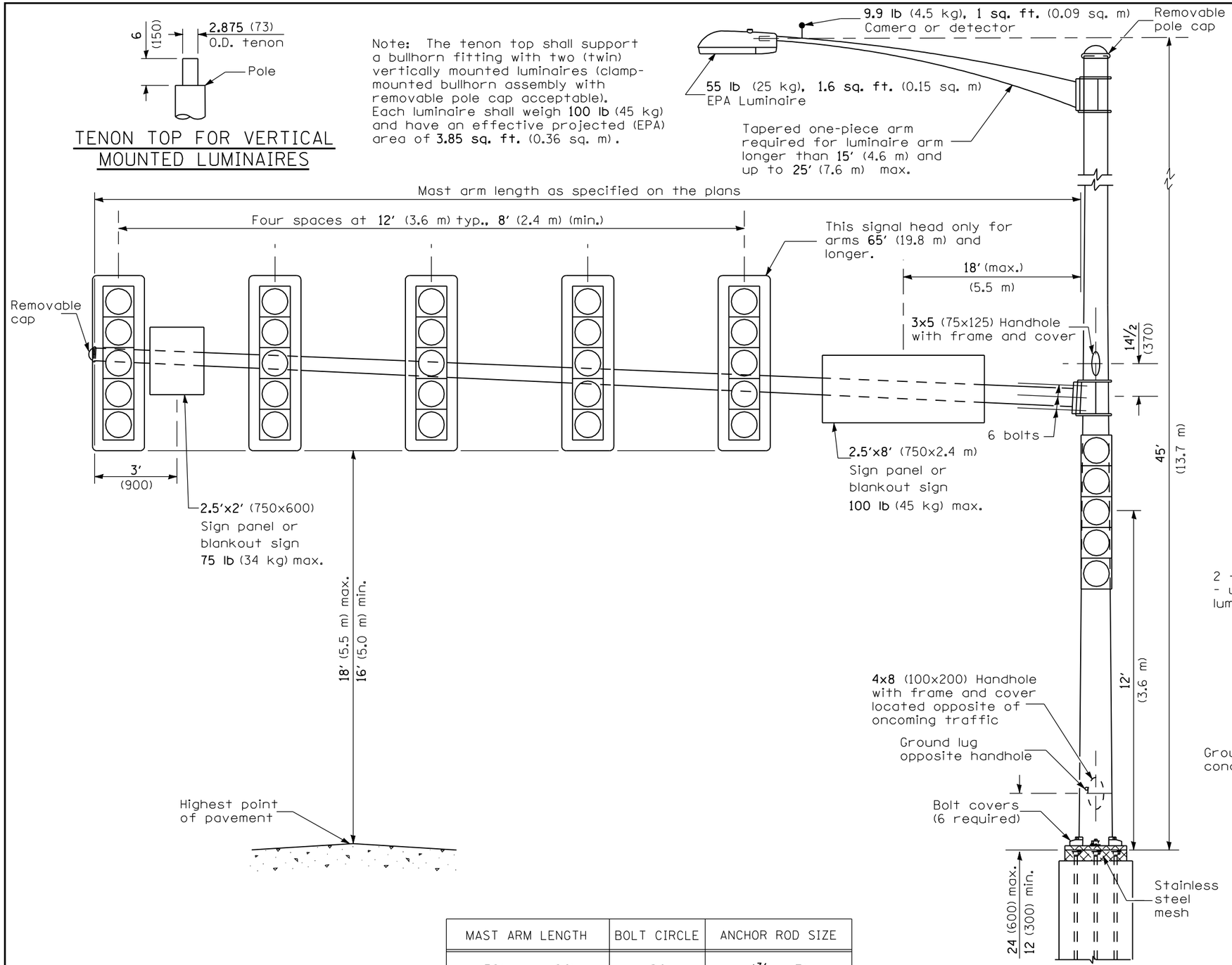

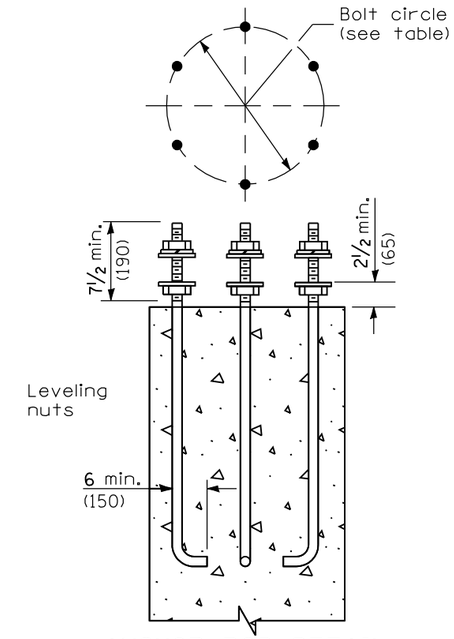

ANCHOR ROD DETAIL

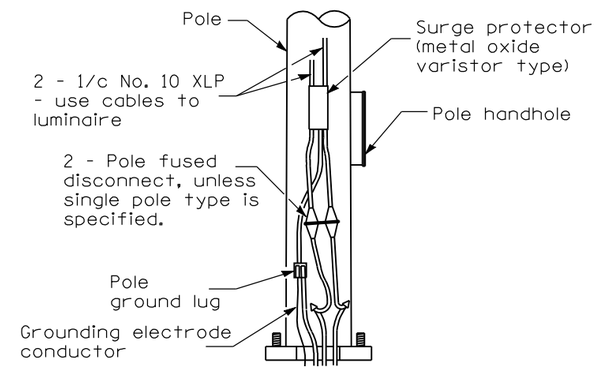

POLE BASE DETAIL

GENERAL NOTES

Signal heads, sign panels, and other attachments are shown for minimum design loading purposes only. Each signal head shall weigh 80 lb (36 kg) and have a projected area of 14.7 sq. ft. (1.37 sq. m).

All dimensions are in inches (millimeters) unless otherwise shown.

MAST ARM LENGTH	BOLT CIRCLE	ANCHOR ROD SIZE
56′ thru 64′ (17.1 m thru 19.8 m)	24 (610)	1¾ x 7′ (44 x 2.10 m)
65′ thru 75′ (20.1 thru 22.9 m)	27 (686)	2 x 7′-6″ (51 x 2.30 m)

DATE	REVISIONS
1-1-09	Switched units to English (metric).
1-1-08	New standard.

STEEL COMB. MAST ARM ASSEMBLY AND POLE 56′ THROUGH 75′

STANDARD 877012-01

Illinois Department of Transportation

APPROVED January 1, 2009
ENGINEER OF OPERATIONS

APPROVED January 1, 2009
ENGINEER OF DESIGN AND ENVIRONMENT

ISSUED 1-1-08

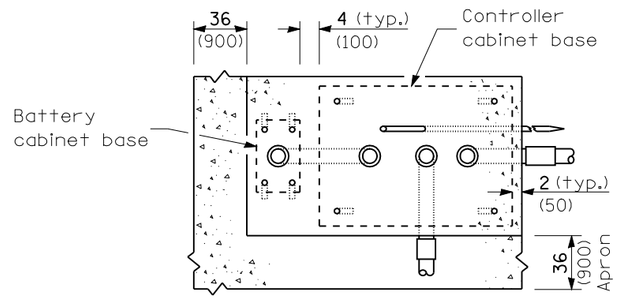

TOP VIEW

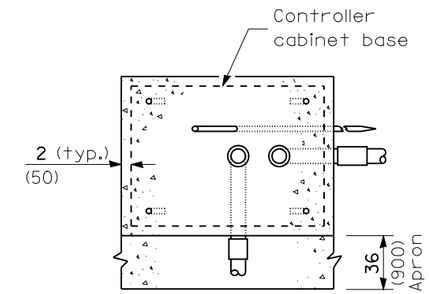

TOP VIEW

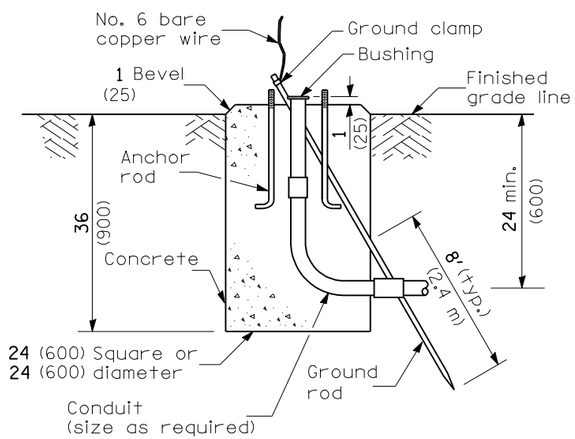

TYPE A

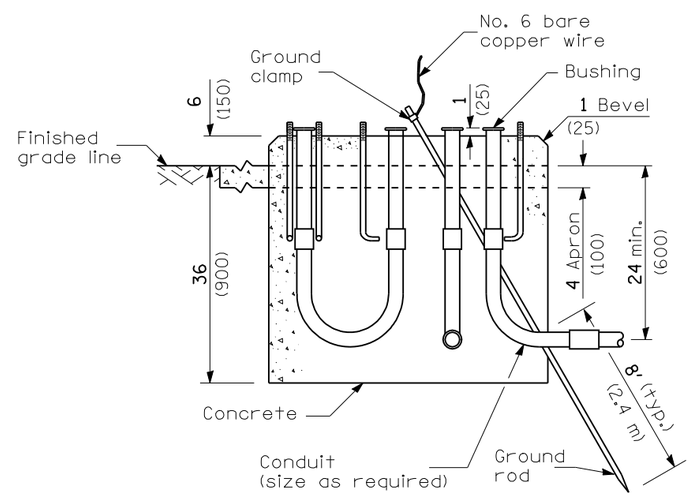

TYPE C
FOR GROUND MOUNTED
CONTROLLER CABINET
AND UPS BATTERY CABINET

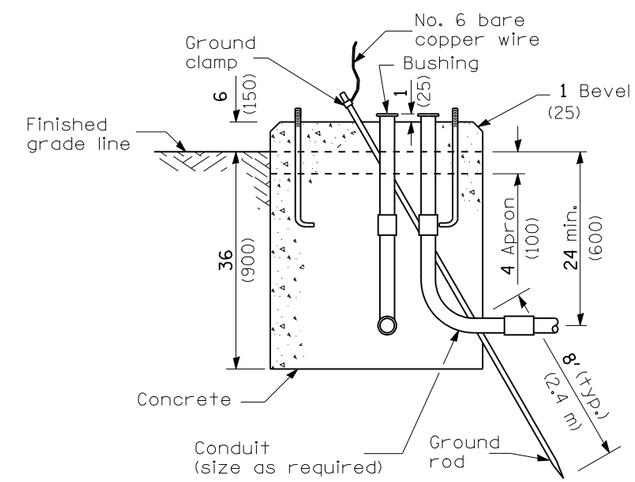

TYPE D
FOR GROUND MOUNTED
CONTROLLER CABINET

All dimensions are in inches (millimeters)
unless otherwise shown.

Illinois Department of Transportation

APPROVED January 1, 2010
ENGINEER OF OPERATIONS

APPROVED January 1, 2010
ENGINEER OF DESIGN AND ENVIRONMENT

ISSUED 1-1-02

DATE	REVISIONS
1-1-10	Revised note for
	foundation depth in tbl.
	Revised sizes of rebars.
1-1-09	Switched units to
	English (metric).

CONCRETE FOUNDATION DETAILS

(Sheet 1 of 2)

STANDARD 878001-08

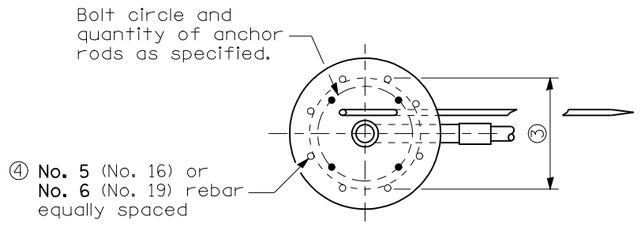

TOP VIEW

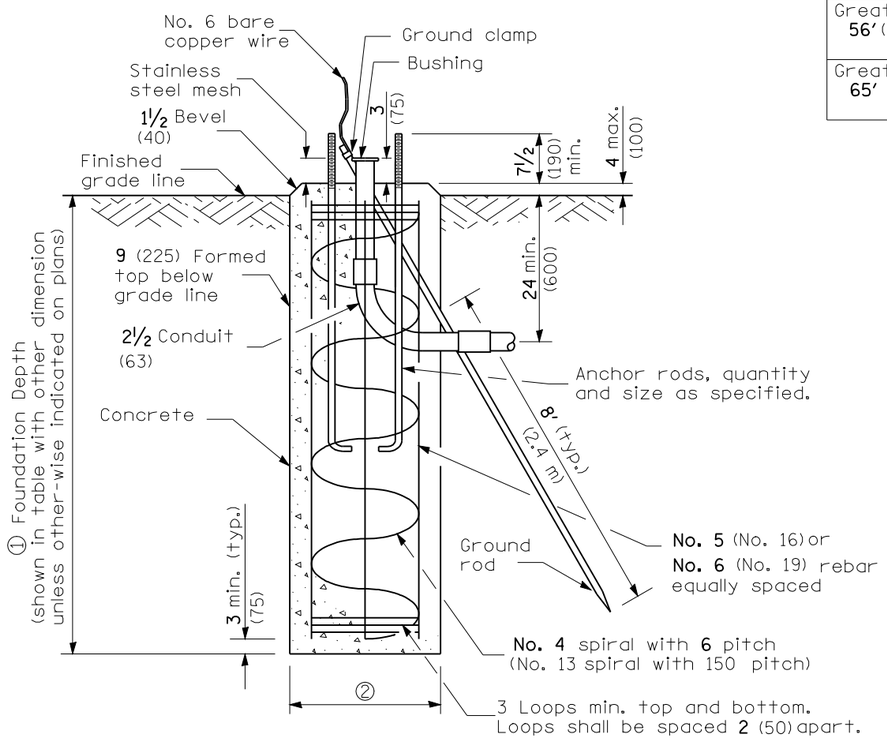

TYPE E

Mast Arm Length	① Foundation Depth *	② Foundation Diameter	③ Spiral Diameter	④ Quantity of Rebars	Size of Rebars
Less than 30' (9.1 m)	10'-0" (3.0 m)	30 (750)	24 (600)	8	6 (19)
Greater than or equal to 30' (9.1 m) and less than 40' (12.2 m)	13'-6" (4.1 m)	30 (750)	24 (600)	8	6 (19)
	11'-0" (3.4 m)	36 (900)	30 (750)	12	7 (22)
Greater than or equal to 40' (12.2 m) and less than 50' (15.2 m)	13'-0" (4.0 m)	36 (900)	30 (750)	12	7 (22)
Greater than or equal to 50' (15.2 m) and up to 55' (16.8 m)	15'-0" (4.6 m)	36 (900)	30 (750)	12	7 (22)
Greater than or equal to 56' (16.8 m) and less than 65' (19.8 m)	21'-0" (6.4 m)	42 (1060)	36 (900)	16	8 (25)
Greater than or equal to 65' (19.8 m) and up to 75' (22.9 m)	25'-0" (7.6 m)	42 (1060)	36 (900)	16	8 (25)

* For standard and combination mast arm assemblies. Foundation depths for standard dual mast arms with the longest arm length upto and including 55' (16.8 m) shall be increased by 1' (0.3 m) of that shown in the table, based on the longer of the two arms.

These foundation depths are for sites which have cohesive soils (clayey silt, sandy clay, etc.) along the length of the shaft, with an average Unconfined Compressive Strength (Qu) > 1.0 tsf (100 kpa). This strength shall be verified by boring data prior to construction or with testing by the Engineer during foundation drilling. The Bureau of Bridges & Structures should be contacted for a revised design if other conditions are encountered.

Illinois Department of Transportation

APPROVED January 1, 2010
ENGINEER OF OPERATIONS

APPROVED January 1, 2010
ENGINEER OF DESIGN AND ENVIRONMENT

ISSUED 1-1-02

CONCRETE FOUNDATION DETAILS

(Sheet 2 of 2)

STANDARD 878001-08

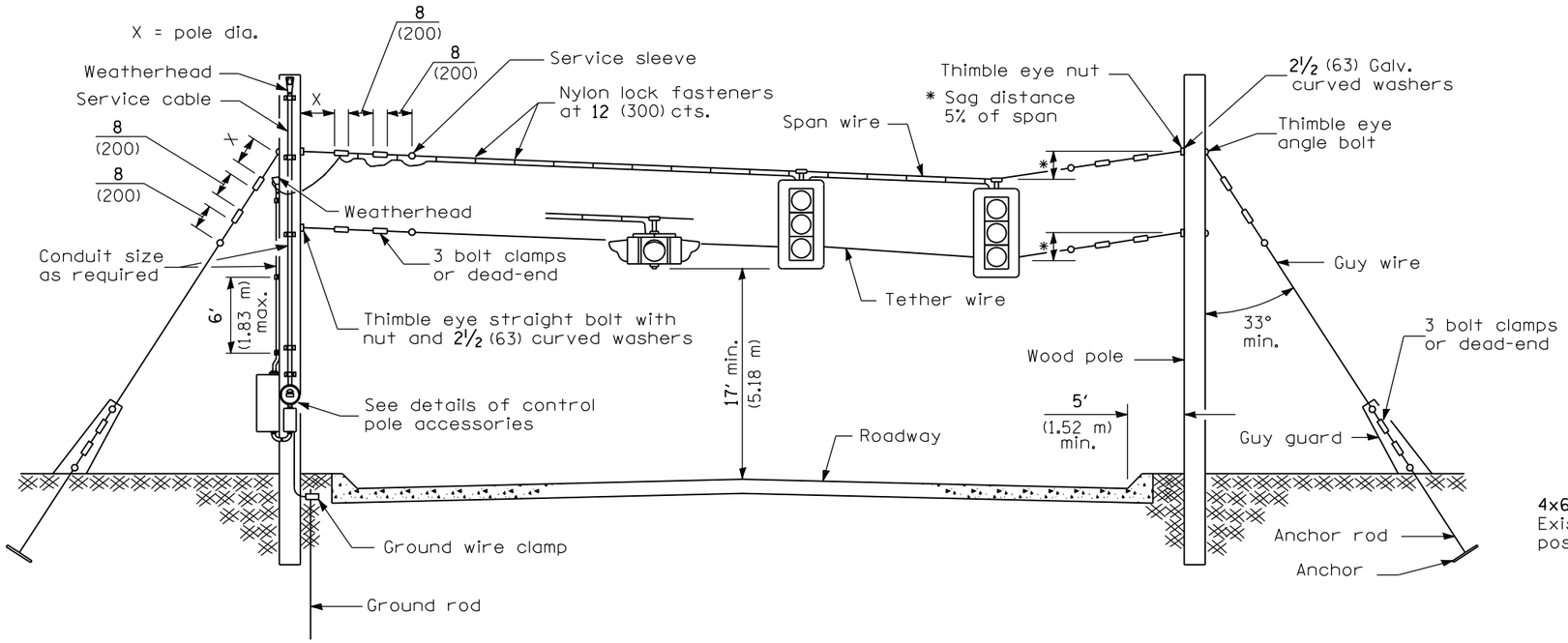

SPAN WIRE MOUNTED SIGNALS AND FLASHING BEACON

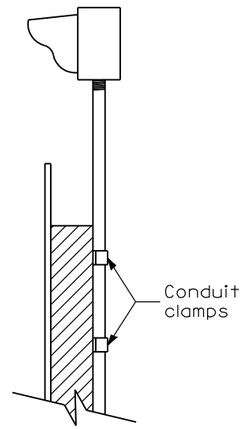

MOUNTING DETAIL

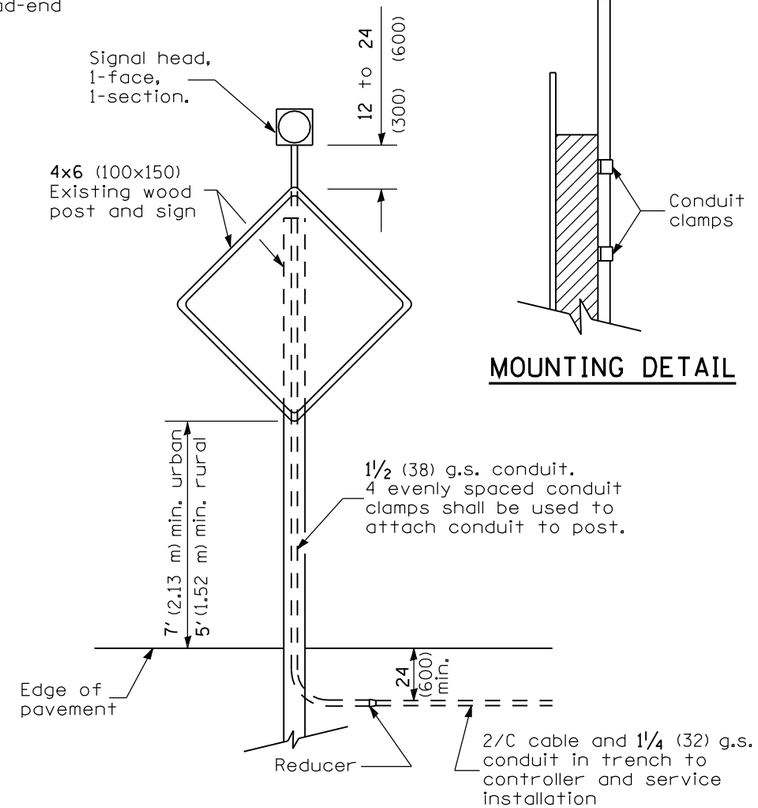

POST MOUNTED FLASHING BEACON

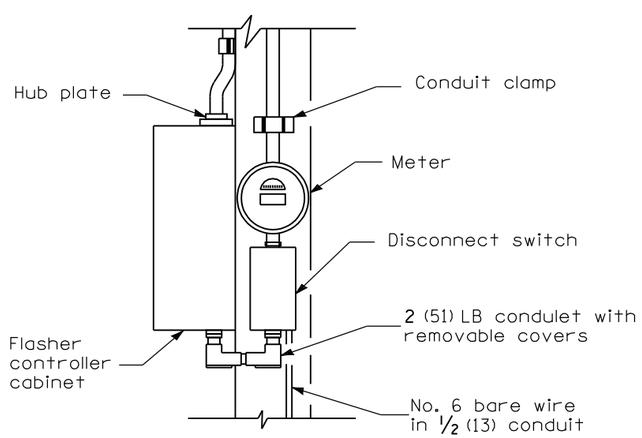

CONTROL POLE DETAIL

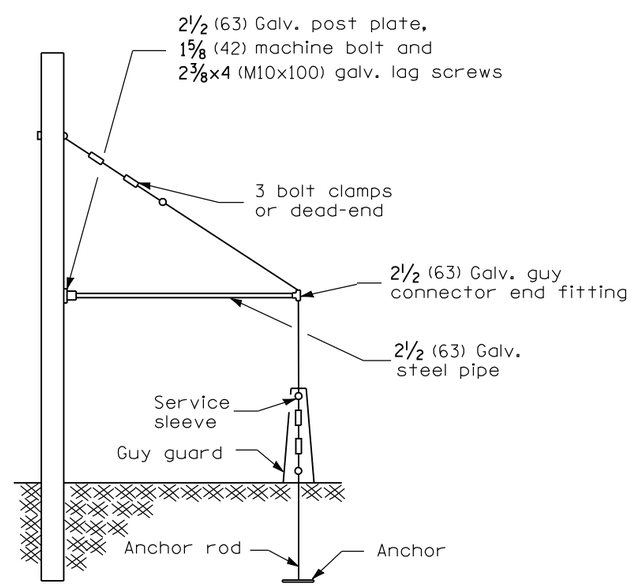

SIDEWALK GUY DETAIL

All dimensions are in inches (millimeters) unless otherwise shown.

Illinois Department of Transportation

APPROVED January 1, 2009
ENGINEER OF OPERATIONS

APPROVED January 1, 2009
ENGINEER OF DESIGN AND ENVIRONMENT

ISSUED 1-1-02

DATE	REVISIONS
1-1-09	Switched units to English (metric).
1-1-02	Renum. Standard 840001.

SPAN WIRE MOUNTED SIGNALS AND FLASHING BEACON INSTALLATION

STANDARD 880001-01

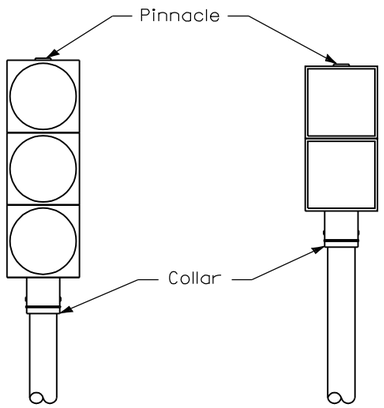

POST MOUNTED
TRAFFIC SIGNAL HEAD

POST MOUNTED
PEDESTRIAN SIGNAL HEAD

ONE WAY

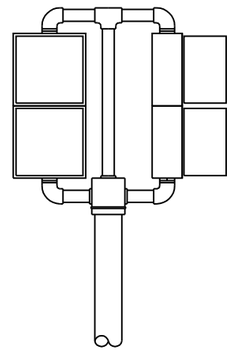

POST MOUNTED
PEDESTRIAN SIGNAL HEAD

TWO WAY

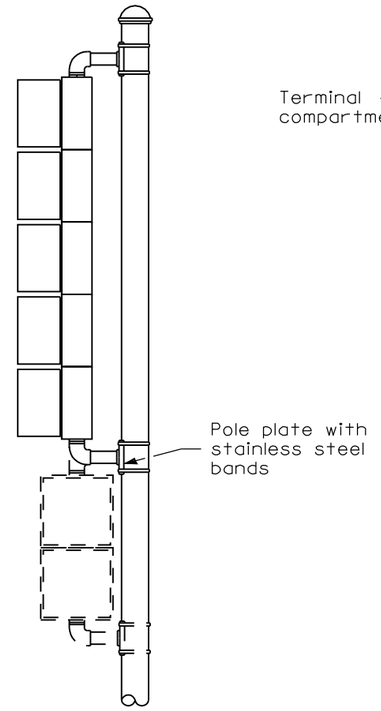

BRACKET MOUNTED
TRAFFIC SIGNAL HEAD

ONE WAY

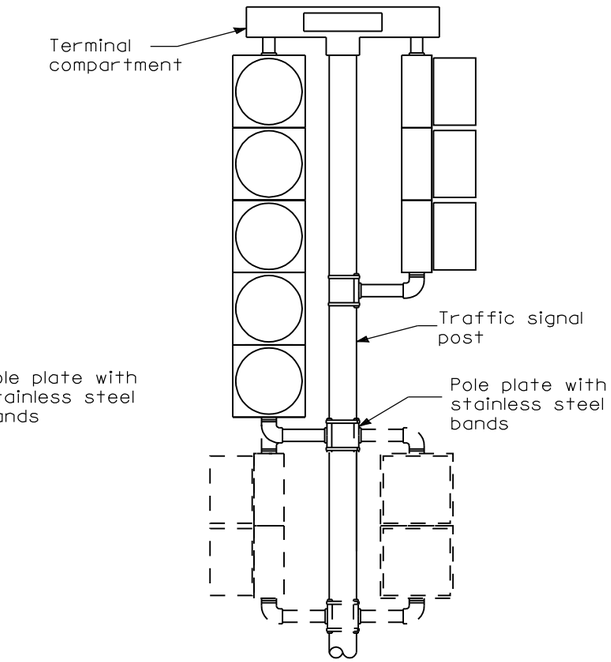

BRACKET MOUNTED
TRAFFIC SIGNAL HEAD

TWO WAY

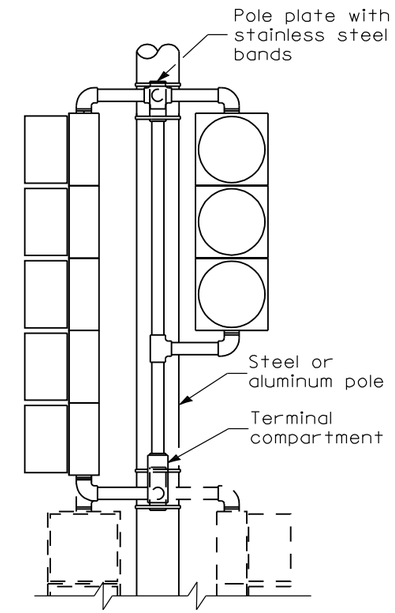

BRACKET MOUNTED
TRAFFIC SIGNAL HEAD

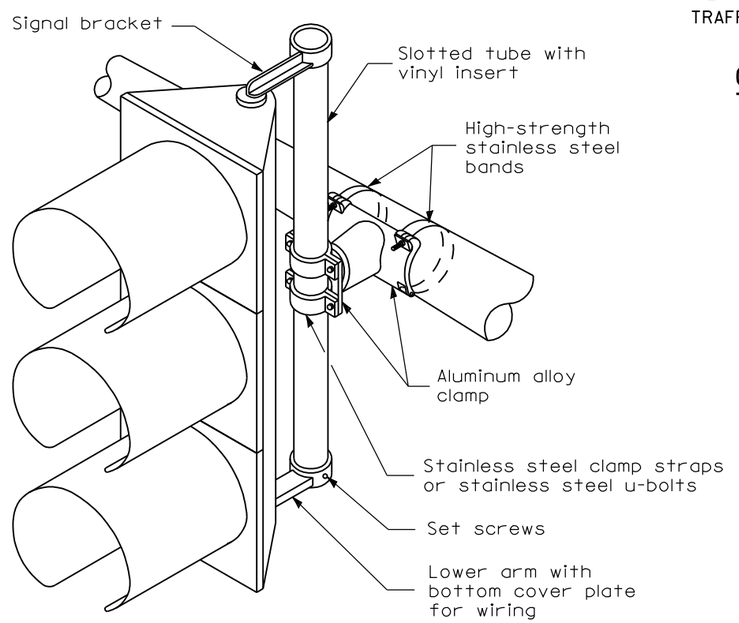

STEEL MAST ARM MOUNTING

Illinois Department of Transportation

APPROVED January 1, 2009
ENGINEER OF OPERATIONS
APPROVED January 1, 2009
ENGINEER OF DESIGN AND ENVIRONMENT

ISSUED 1-1-02

DATE	REVISIONS
1-1-09	Omitted note regarding
	units of length.
1-1-02	Renum. Standard 840006.

TRAFFIC SIGNAL MOUNTING DETAILS

STANDARD 880006-01

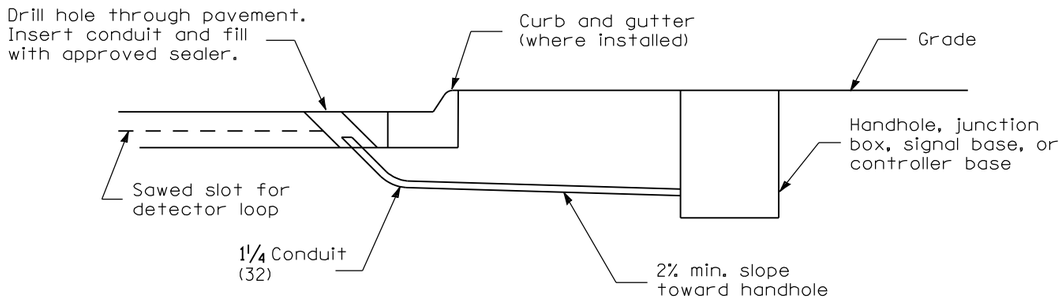

DETECTOR LOOP LEAD-IN

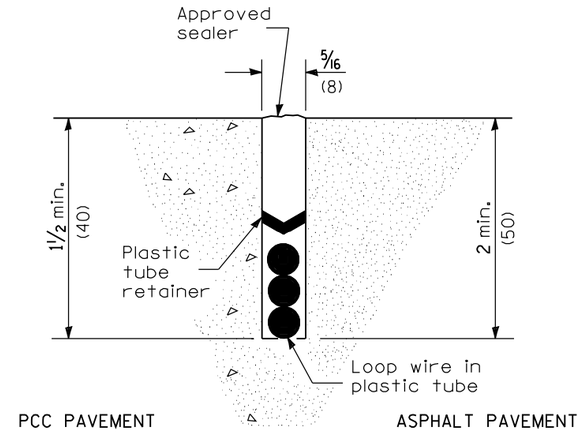

DETECTOR LOOP INSTALLATION

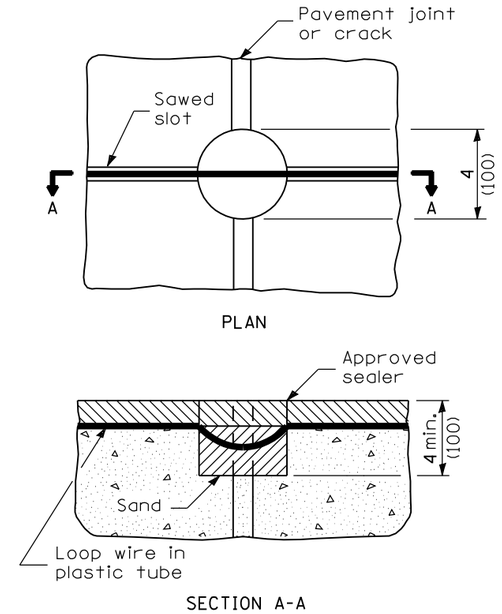

NOTE

Loop wire shall follow saw cut to bottom, forming slack section at joint.

DETECTOR LOOP AT PAVEMENT JOINT OR PAVEMENT CRACK

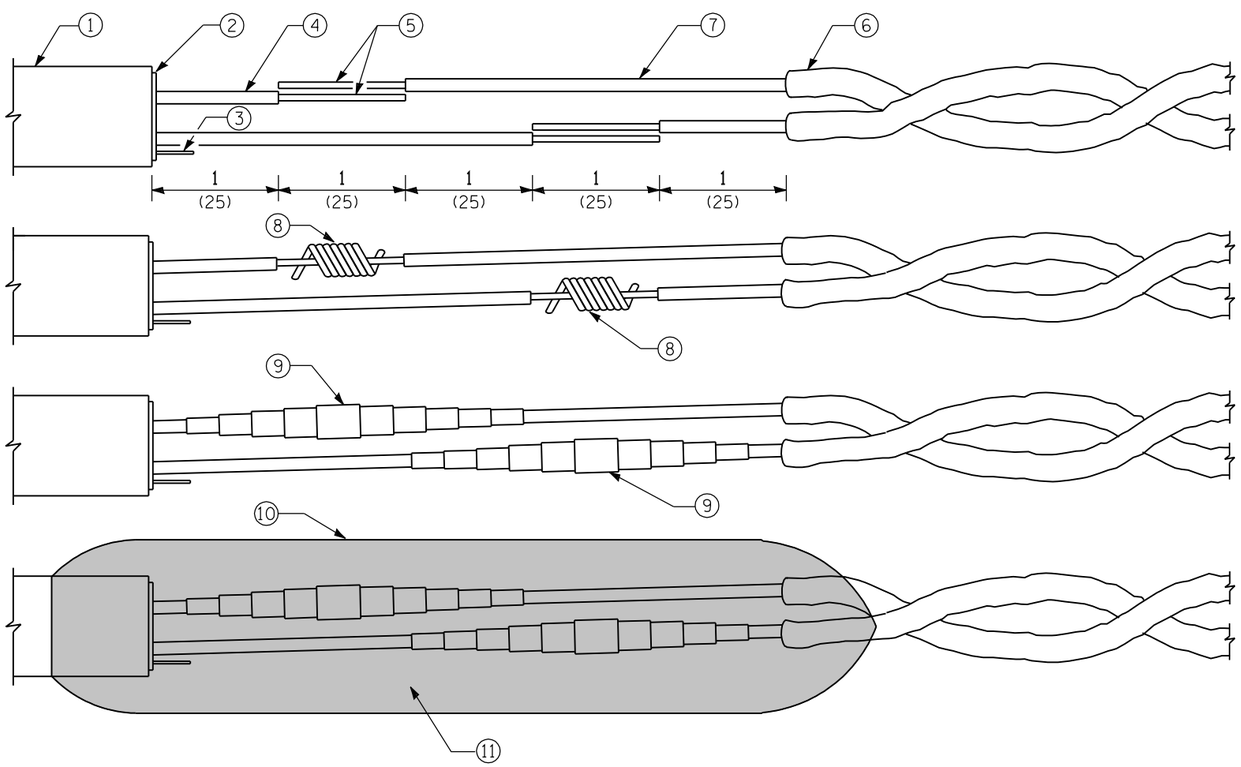

1 = Lead-in cable (single pair or multipair)
2 = Lead-in cable shield
3 = Lead-in cable shield drain-wire
4 = Lead-in cable insulated conductor
5 = Bare conductor
6 = Loop wire in tube
7 = Loop wire insulated conductor
8 = Twisted and resin soldered conductor
9 = Electrical tape insulated spice
10 = Rigid mold
11 = Waterproof and dielectric resin

LOOP WIRE AND LEAD-IN CABLE SPLICE

All dimensions are in inches (millimeters) unless otherwise shown.

Illinois Department of Transportation

APPROVED January 1, 2009
ENGINEER OF OPERATIONS

APPROVED January 1, 2009
ENGINEER OF DESIGN AND ENVIRONMENT

ISSUED 1-1-02

DATE	REVISIONS
1-1-09	Switched units to English (metric)
1-1-02	Renum. Standard 846001.

DETECTOR LOOP INSTALLATIONS

STANDARD 886001-01

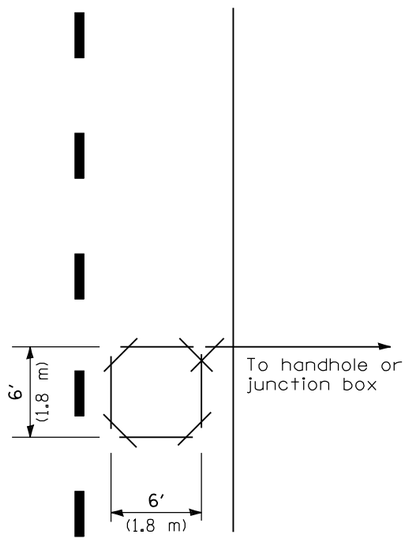

FOR POINT DETECTION
SHORT LOOP

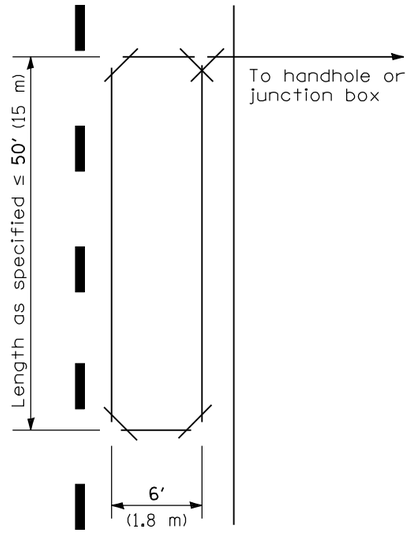

FOR PRESENCE DETECTION
LONG LOOP

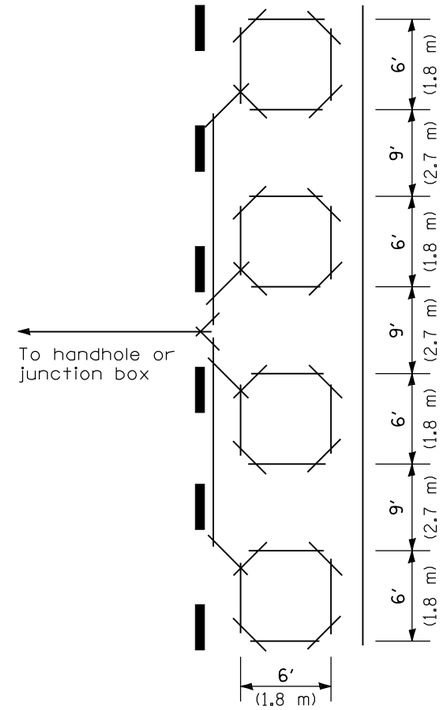

FOR PRESENCE DETECTION
MULTIPLE LOOP IN SERIES

SLOT PLAN

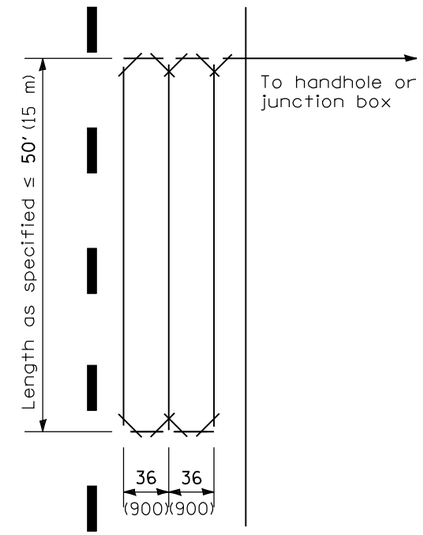

FOR PRESENCE DETECTION
QUADRUPOLE LOOP

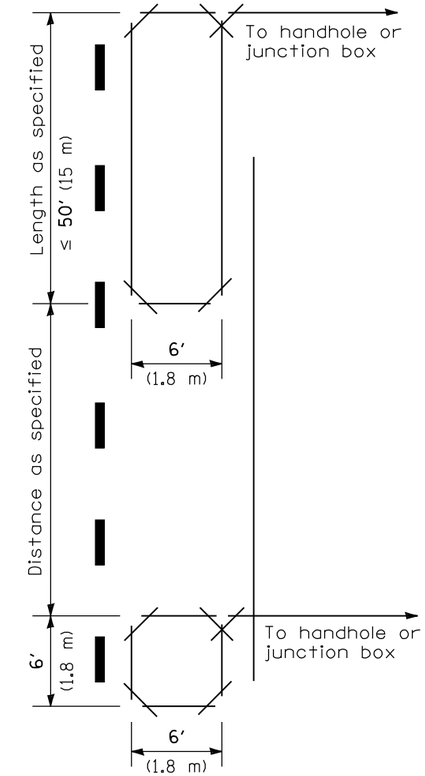

FOR EXTENDED-CALL DETECTION

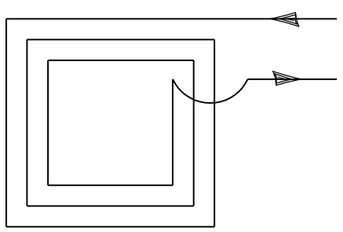

SHORT LOOP

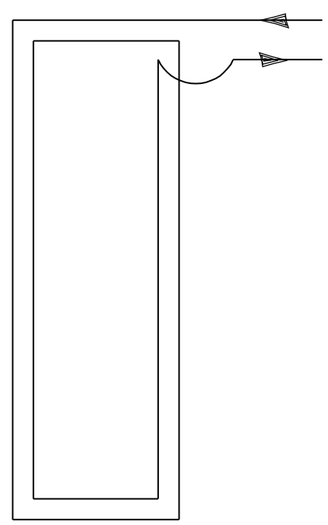

LONG LOOP

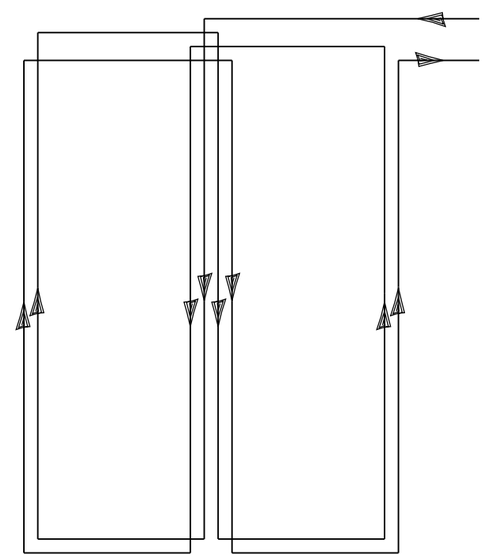

QUADRUPOLE LOOP

WIRING DIAGRAM

All dimensions are in inches (millimeters)
unless otherwise shown.

Illinois Department of Transportation

APPROVED January 1, 2009
ENGINEER OF OPERATIONS

APPROVED January 1, 2009
ENGINEER OF DESIGN AND ENVIRONMENT

ISSUED 1-1-02

DATE	REVISIONS
1-1-09	Switched units to English (metric)
1-1-02	Renum. Standard 846006.

TYPICAL LAYOUTS FOR DETECTION LOOPS

STANDARD 886006–01

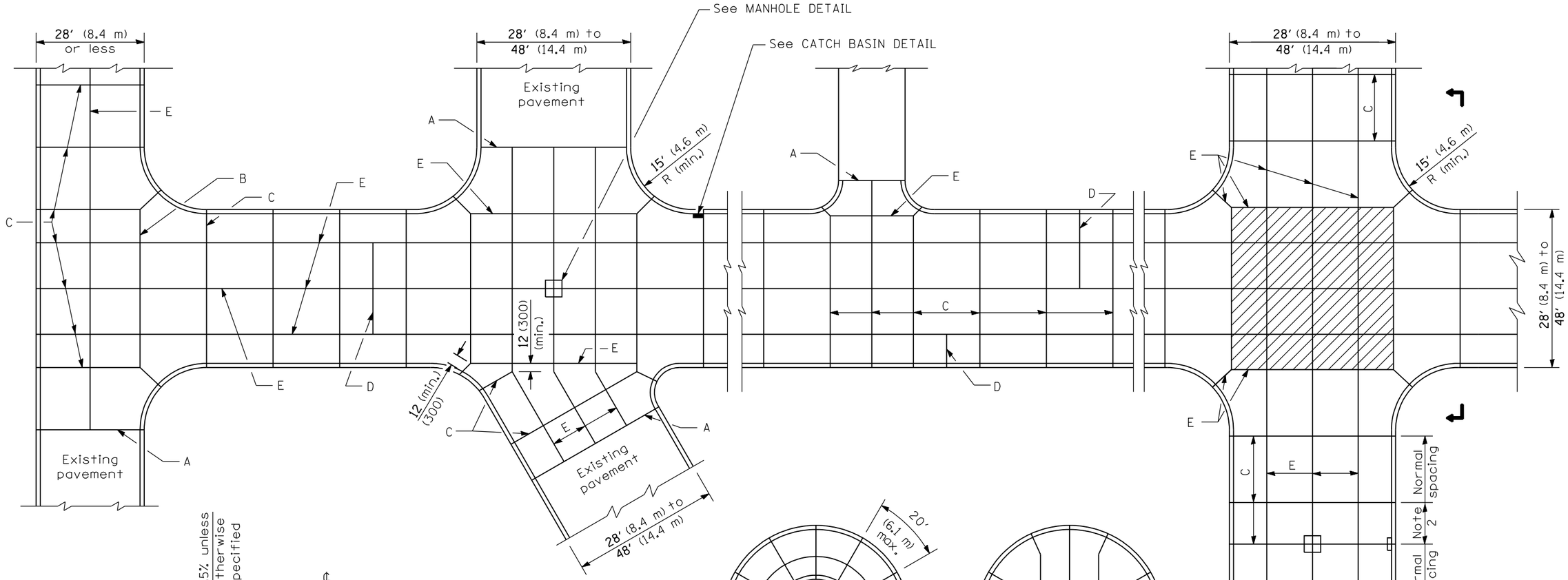

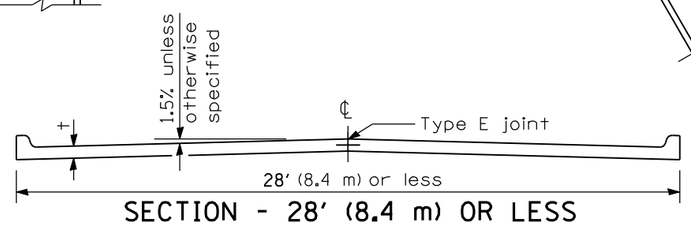

SECTION - 28′ (8.4 m) OR LESS

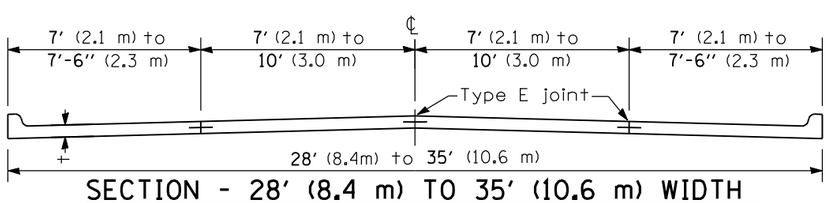

SECTION - 28′ (8.4 m) TO 35′ (10.6 m) WIDTH

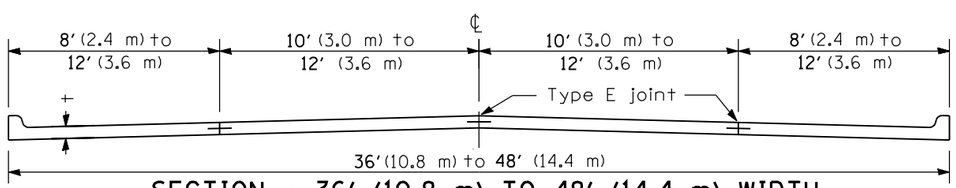

SECTION - 36′ (10.8 m) TO 48′ (14.4 m) WIDTH

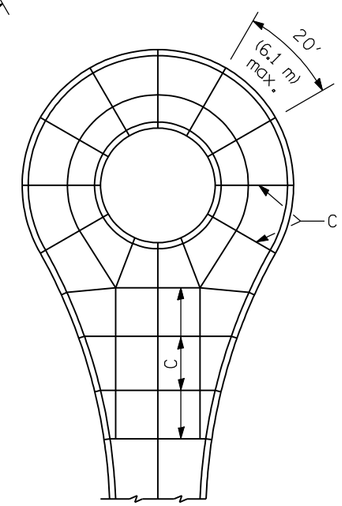

CUL DE SAC OPEN CENTER

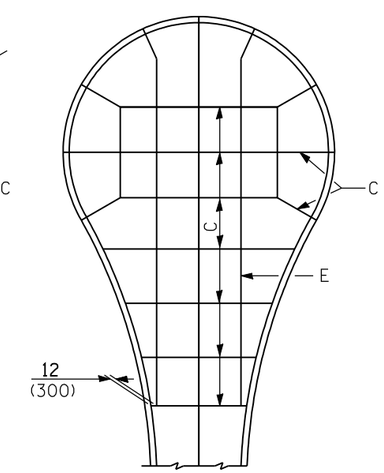

CUL DE SAC FULLY PAVED

All dimensions are in inches (millimeters) unless otherwise shown.

+ = See typical cross section on plans for thickness

Illinois Department of Transportation

APPROVED January 1, 2009
ENGINEER OF LOCAL ROADS AND STREETS

APPROVED January 1, 2009
ENGINEER OF DESIGN AND ENVIRONMENT

ISSUED 1-1-97

DATE	REVISIONS
1-1-09	Switched units to English (metric).
8-1-05	Corrected manhole and catch basin notes on Sheet 1.

PCC PAVEMENT SPECIAL
(NONREINFORCED)

(Sheet 1 of 2)

STANDARD B.L.R. 10-6

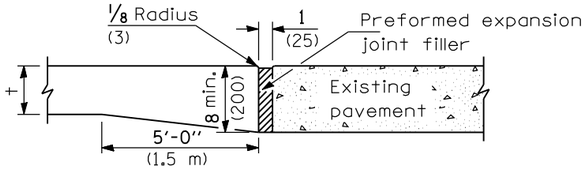

TYPE A
EXPANSION JOINT

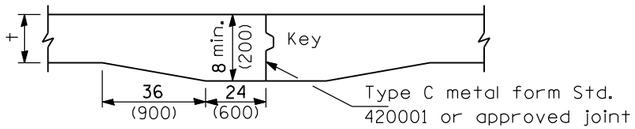

TYPE B
KEYED JOINT

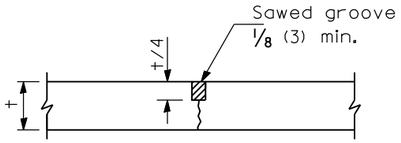

TYPE C
SAWED TRANSVERSE JOINT

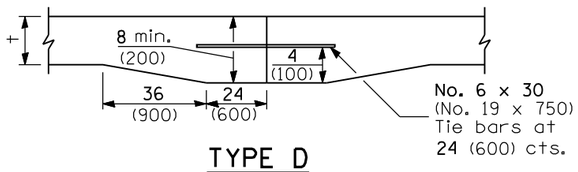

TYPE D
TIED TRANSVERSE CONSTRUCTION JOINT

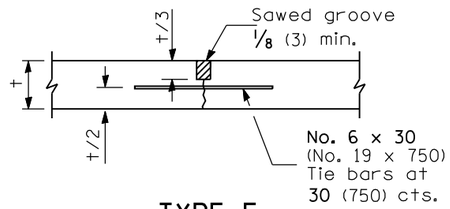

TYPE E
SAWED LONGITUDINAL JOINT

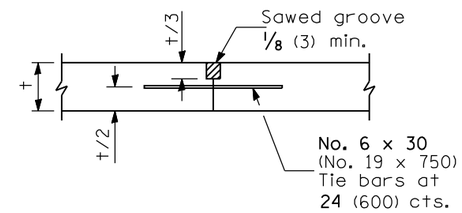

TYPE E
LONGITUDINAL CONSTRUCTION JOINT

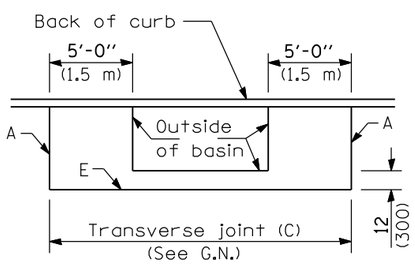

CATCH BASIN DETAIL

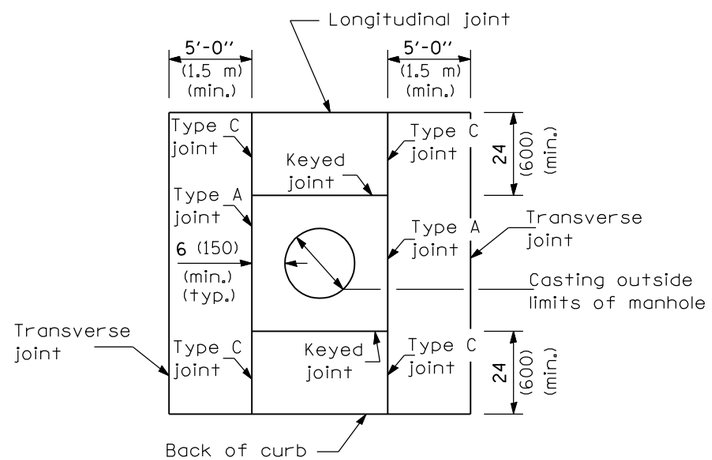

MANHOLE DETAIL
Showing Joint types

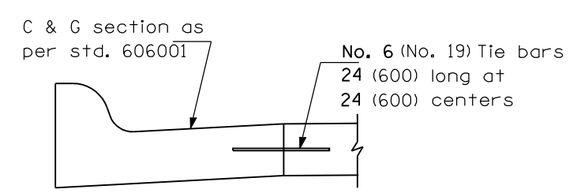

COMB. CURB & GUTTER DETAIL
Alt. const. see G.N.

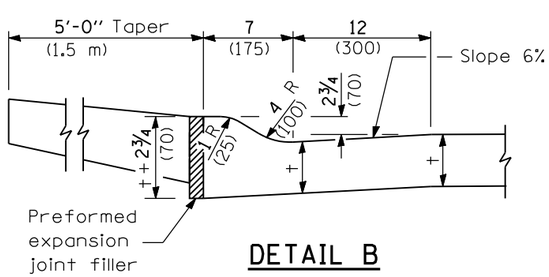

DETAIL B

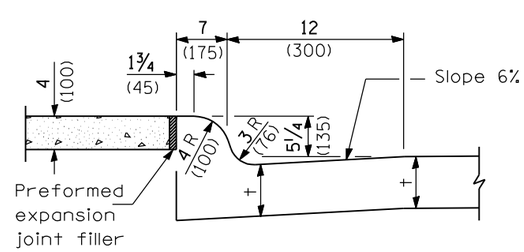

DETAIL A

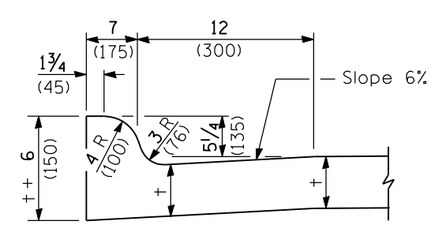

INTEGRAL CURB
See DETAIL A for crosswalks and DETAIL B for driveways.

GENERAL NOTES

All catch basins shall be separated from the pavement and curb by boxing out as shown in the detail. Manhole castings within the pavement limits shall be boxed in a like manner except when telescoping type castings are used.

When a joint falls within 5 ft. (1.5 m) of or contacts basins, manholes, or other structures, shorten one or more panels either side of opening to permit joint to fall at the corners of the box out.

When specified, roundouts as shown on Standard 420111 shall be used in lieu of the manhole detail shown herein.

All transverse joints must extend through curbs and be continuous across pavement, except tied transverse construction joints. Expansion joints will be required as shown on the plans.

When specified, the pavement structure thickness at intersections shall be increased. This requirement generally will occur when the design traffic through the intersection exceeds the typical design of the pavement structure either side of the intersection.

Joints shall be sawed to a depth of t/4 for transverse joints and t/3 for longitudinal joints. Saw joints shall be sealed with material meeting the requirements of Section 1050 of the Standard Specifications.

This alternate construction is at the Contractor's option and shall be constructed in accordance with Section 606 of the Standard Specifications. The combination concrete curb and gutter shall be measured in place and the area computed in sq. yards (sq. meters). This work will be paid for at the contract unit price per sq. yards (sq. meters) for portland cement concrete pavement special with integral curb of the thickness specified and shall include all materials and labor.

Transverse joint spacing shall not exceed 15 ft. (4.6 m).

Construct TYPE D tied transverse construction joint when construction joint does not fall at a TYPE C sawed transverse joint.

Illinois Department of Transportation

APPROVED January 1, 2009
ENGINEER OF LOCAL ROADS AND STREETS

APPROVED January 1, 2009
ENGINEER OF DESIGN AND ENVIRONMENT

ISSUED 1-1-97

PCC PAVEMENT SPECIAL
(NONREINFORCED)

(Sheet 2 of 2)

STANDARD B.L.R. 10-6

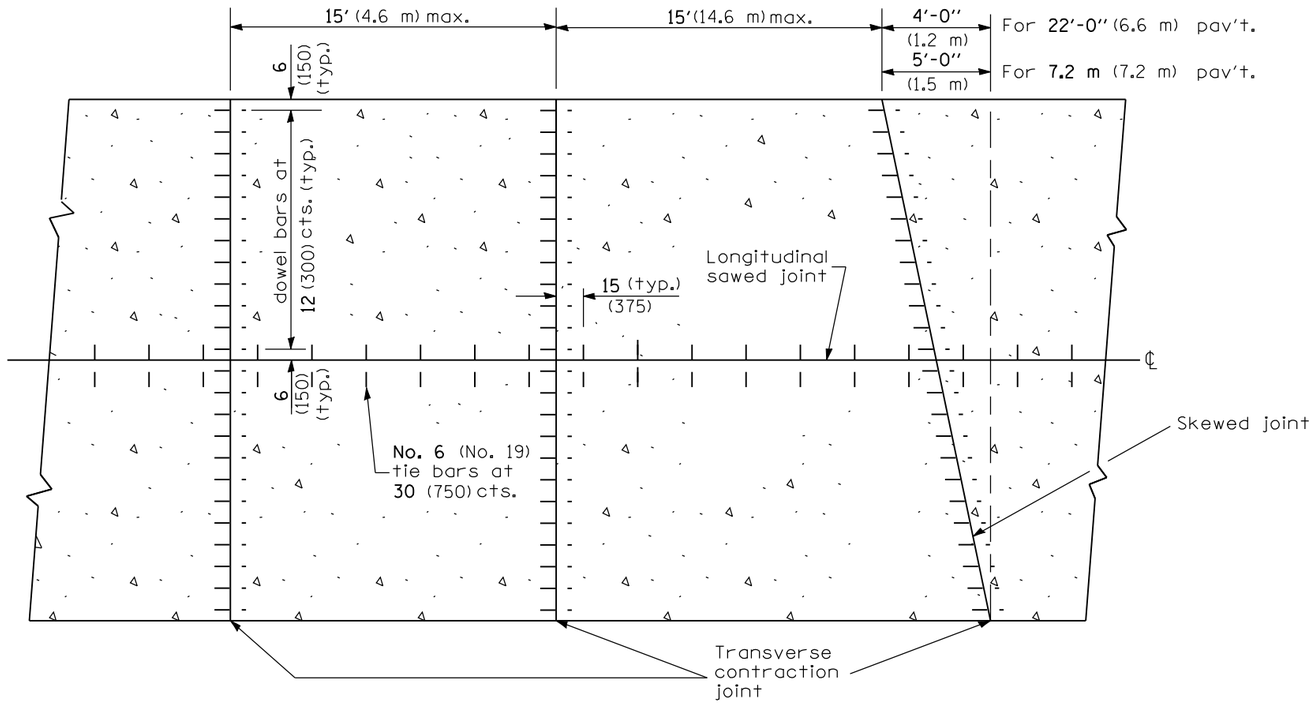

PLAN OF PAVEMENT

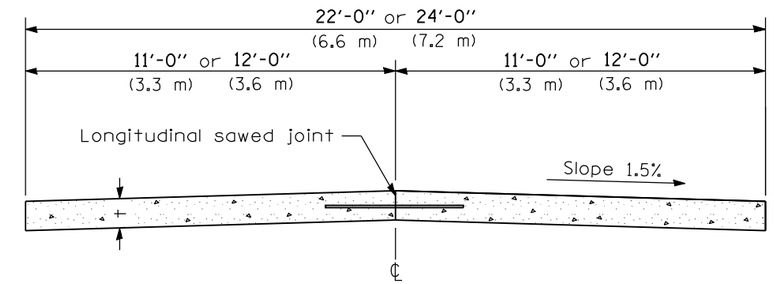

CROSS SECTION OF PAVEMENT

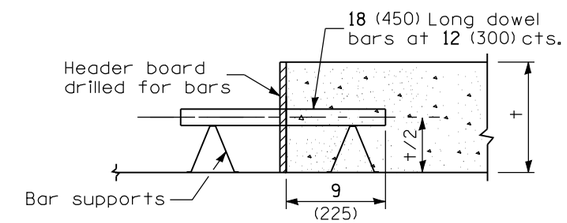

TRANSVERSE CONSTRUCTION JOINT

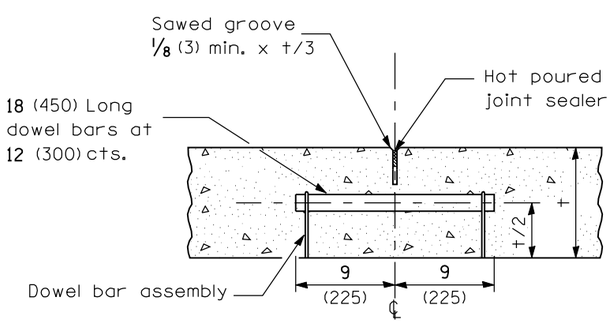

TRANSVERSE CONTRACTION JOINT

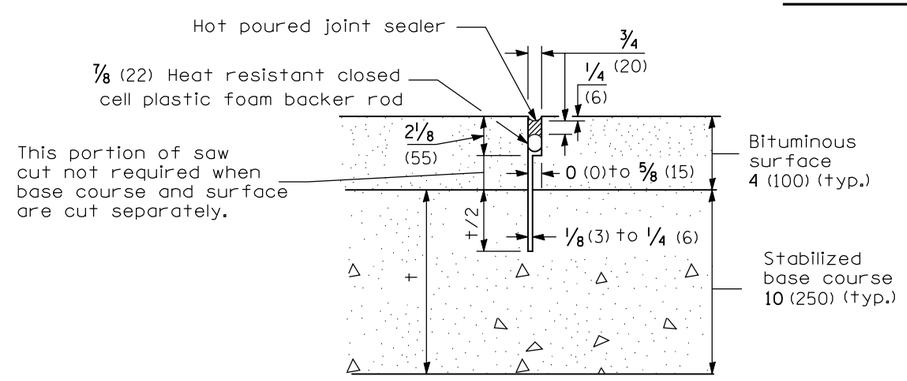

TRANSVERSE CONTRACTION JOINT

(For CAM, CFA and LFA Base Course Mixtures)

DOWEL BAR TABLE	
PAVEMENT THICKNESS	DOWEL BAR DIAMETER
8 (200) or greater	1 1/2 (38)
7 (175) thru 7.99 (199)	1 1/4 (32)
Less than 7 (175)	1 (25)

GENERAL NOTES

See Standard 420001 for details of Transverse Expansion Joints, Longitudinal Sawed Joints and Longitudinal Construction Joints.

Skewed joints shall be used when specified by Special Provisions.

t = Pavement thickness (See Typical Cross Section)

All dimensions are in inches (millimeters) unless otherwise shown.

Illinois Department of Transportation

APPROVED January 1, 2009
ENGINEER OF LOCAL ROADS AND STREETS

APPROVED January 1, 2009
ENGINEER OF DESIGN AND ENVIRONMENT

ISSUED 1-1-97

DATE	REVISIONS
1-1-09	Switched units to
	English (metric).
8-1-05	Deleted sheet 2 and
	minor corrections to
	remaining joint details.

PORTLAND CEMENT CONCRETE PAVEMENT

(NONREINFORCED)

STANDARD B.L.R. 14-10

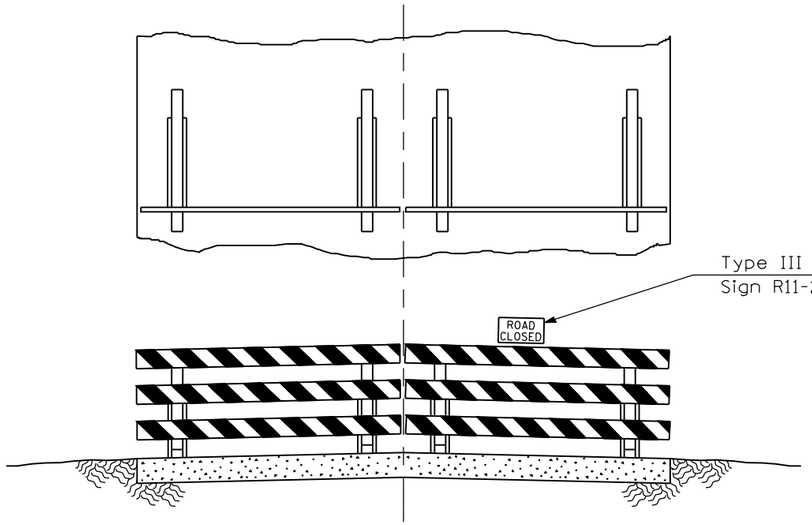

Resident traffic and day labor force's equipment to use road shoulder for passing barricade.

Type III Barricades with Standard Sign R11-2 or R11-4 mounted as shown.

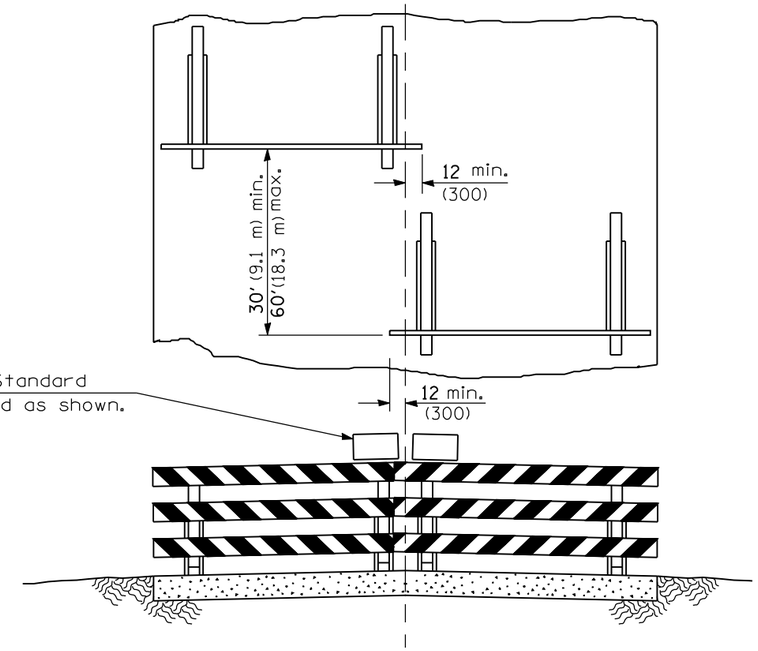

Use when shoulders are too narrow for passage of traffic.

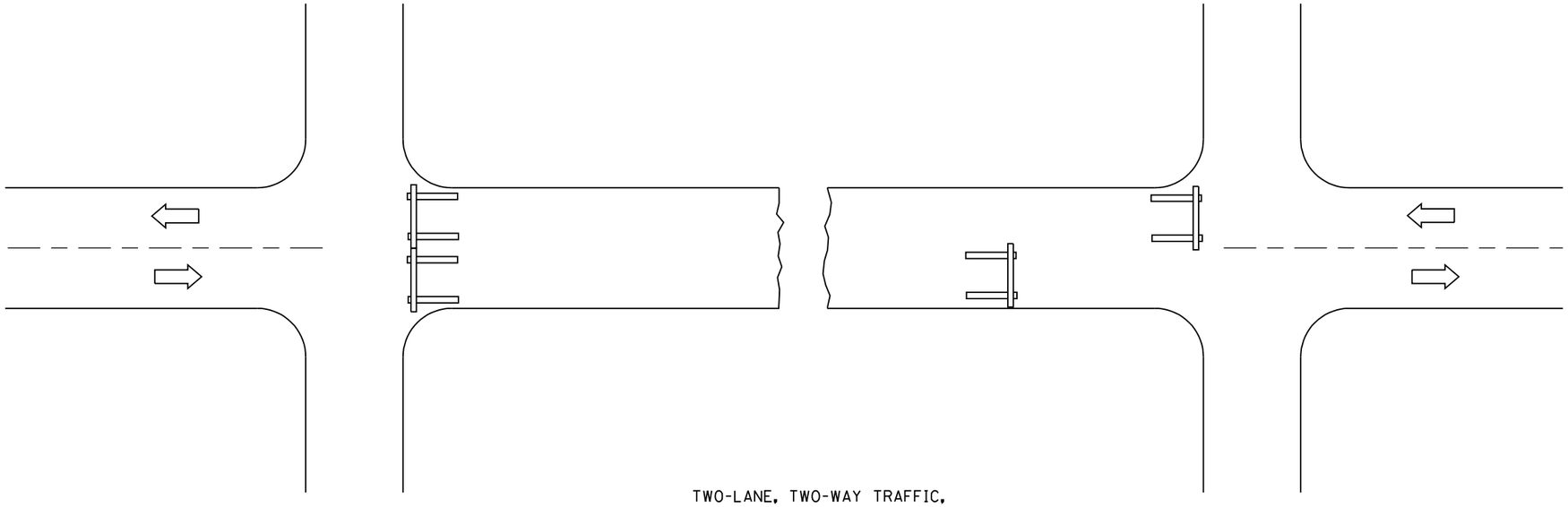

TWO-LANE, TWO-WAY TRAFFIC, RURAL OPERATIONS EXCEEDING ONE DAYLIGHT PERIOD

GENERAL NOTES

Type III barricades to be width of pavement only.

Reflectorized striping shall appear on both sides of barricades. Barricades shall be positioned so that stripes slope downward toward the side on which traffic is to pass.

Although not shown, advance warning signs with minimum dimensions of 36x36 (900x900) and black legends on orange reflectorized backgrounds shall be utilized where needed.

This case is for use on rural local roads where the local authority considers this protection to be appropriate for the specific job conditions.

All dimensions are in inches (millimeters) unless otherwise shown.

Illinois Department of Transportation

APPROVED January 1, 2009
ENGINEER OF LOCAL ROADS AND STREETS

APPROVED January 1, 2009
ENGINEER OF DESIGN AND ENVIRONMENT

ISSUED 1-1-97

DATE	REVISIONS
1-1-09	Switched units to English (metric).
1-1-98	Rev. "R11-1" to "R11-4". Rev. 4th General Note.

TRAFFIC CONTROL DEVICES - DAY LABOR CONSTRUCTION

STANDARD B.L.R. 17-4

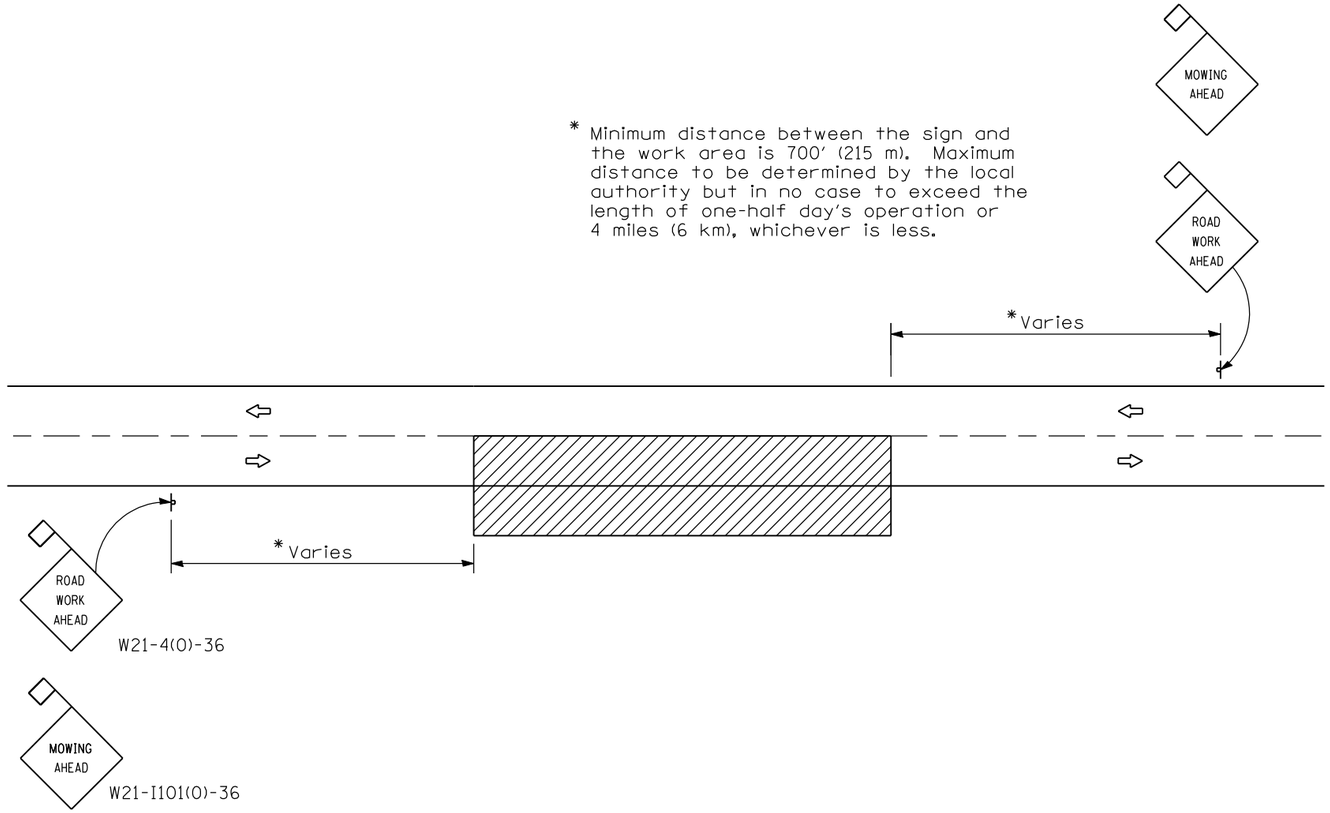

* Minimum distance between the sign and the work area is 700′ (215 m). Maximum distance to be determined by the local authority but in no case to exceed the length of one-half day's operation or 4 miles (6 km), whichever is less.

TWO-LANE, TWO-WAY TRAFFIC
RURAL OPERATIONS
DAY OPERATIONS ONLY

SYMBOLS

Work area

Sign with 18x18 (450x450) min. orange flag attached.

TYPICAL APPLICATIONS

MOWING
SPREADING AGGREGATE
WEED SPRAYING
SURFACE MAINTENANCE
BITUMINOUS RESURFACING
CRACK POURING
SHOULDER REPAIR
CLEANING DITCHES

GENERAL NOTES

Maintenance operations shall be confined to one traffic lane, leaving the opposite lane open to traffic. At least 500′ (150 m) of both traffic lanes shall be available for traffic movement between work areas at intervals not greater than 1000′ (300 m).

When operations are on the pavement and stationary or moving at a speed less than 4 mph (6 kph), a ONE LANE AHEAD, or other appropriate sign, shall be installed in each direction between the ROAD WORK AHEAD sign and the work area. The distance between this sign and the work area shall be a minimum of 400′ (120 m) but in no case to exceed the length of one-half day's operation or 4 miles (6 km), whichever is less. The distance between the two signs shall be approximately 400′ (120 m).

All signs are to be removed at completion of the day's operation.

Any unattended obstacle, excavation, or pavement drop off greater than 3 (75) in the work area shall be protected by Type I or Type II barricades with flashing lights.

Longitudinal dimensions may be adjusted slightly to fit field conditions.

All vehicles, equipment, men, and their acitvities are restricted at all times to one side of the pavment.

Flashing lights or rotating beacons are required for all maintenance vehicles while in operation.

Applicable operations illustrated in Standard 701301 may be used when operations do not exceed 15 minutes on the pavement or 60 minutes on the shoulder respectively.

All warning signs shall have minimum dimensions of 36x36 (900x900) and have black legend on an orange reflectorized background.

When fluorescent signs are used, orange flags are not required.

This case is for use on rural local roads where the local authority considers this protection to be appropriate for the specific job conditions.

All dimensions are in inches (millimeters) unless otherwise shown.

Illinois Department of Transportation

APPROVED January 1, 2009
ENGINEER OF LOCAL ROADS AND STREETS
APPROVED January 1, 2009
ENGINEER OF DESIGN AND ENVIRONMENT

ISSUED 1-1-97

DATE	REVISIONS
1-1-09	Switched units to
	English (metric). Moved
	one General Note.
1-1-99	Delete ROW Line.

TRAFFIC CONTROL DEVICES-DAY LABOR MAINTENANCE

STANDARD B.L.R. 18–5

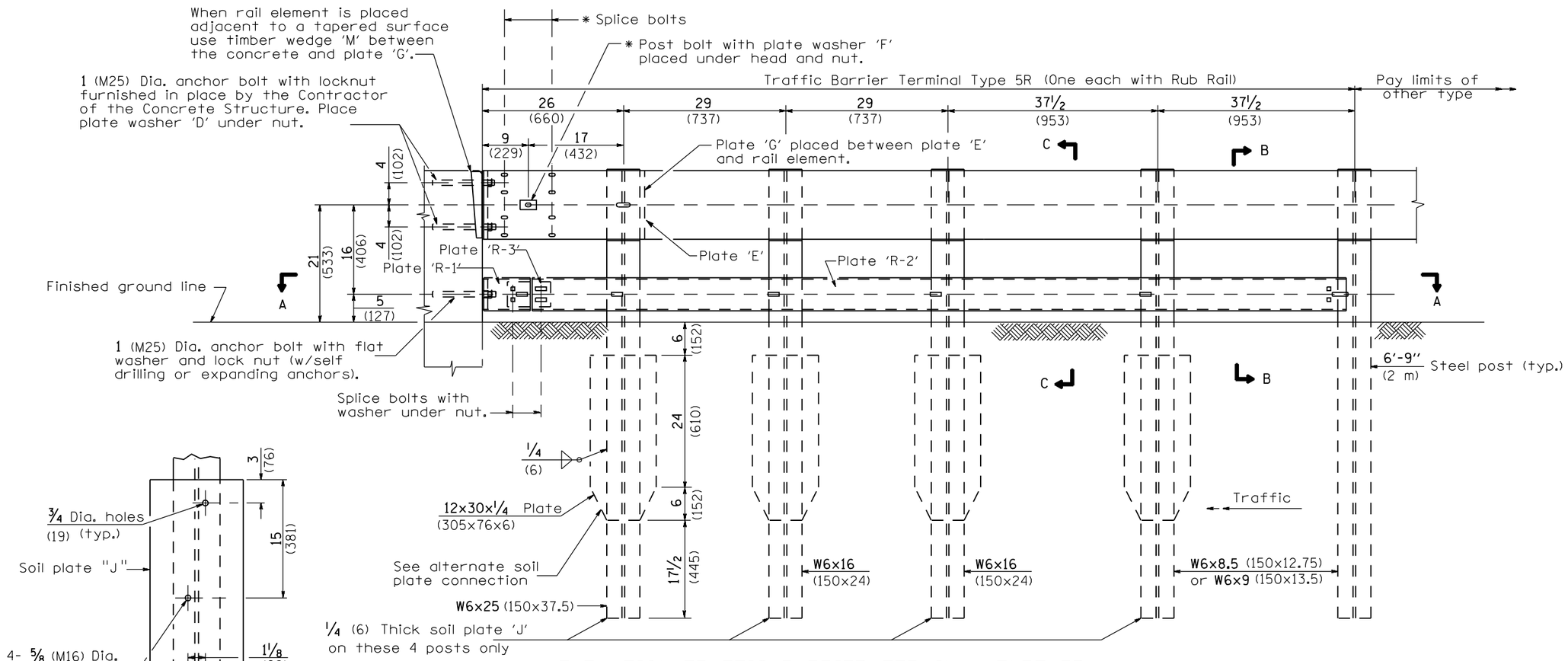

ELEVATION-TRAFFIC BARRIER TERMINAL TYPE 5R

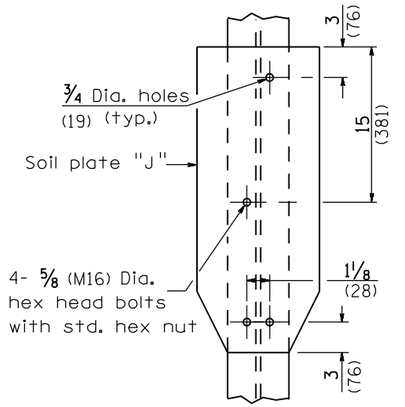

ALTERNATE SOIL PLATE CONNECTION

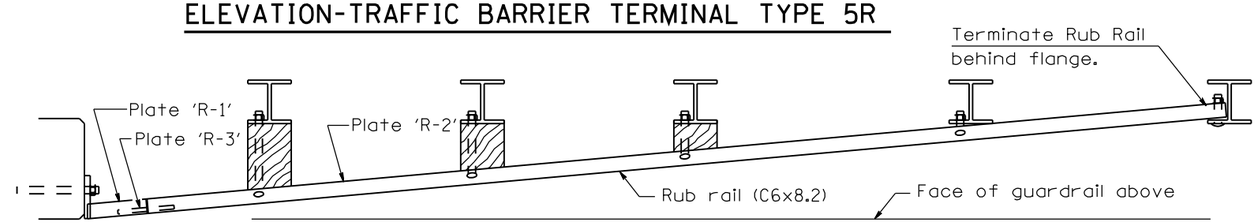

SECTION A-A

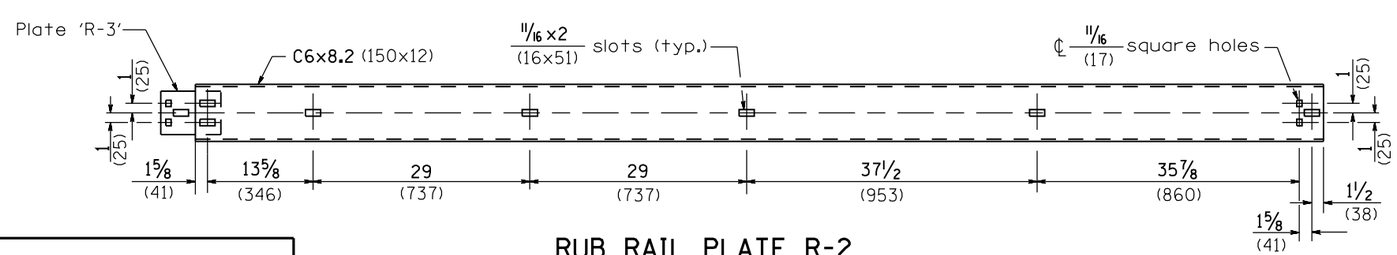

RUB RAIL PLATE R-2

GENERAL NOTES

See Standard B.L.R. 26 for details of guardrail not shown.

Install the face of the guardrail flush with the face of the parapet. Install plate washer "D" so that the 1 (25) projection fills the remainder of the slotted holes in the 1 (25) end plate on plate "G" afterthe 1 (25) bolts are in place.

* When an expantion joint exists below the connector, bolts shall be provided with locknut or double nut and shall be tightened only to a point that will allow plate G to be free to move.

All dimensions are in inches (millimeters) unless otherwise shown.

Illinois Department of Transportation

APPROVED January 1, 2009
ENGINEER OF LOCAL ROADS AND STREETS

APPROVED January 1, 2009
ENGINEER OF DESIGN AND ENVIRONMENT

ISSUED 1-1-97

DATE	REVISIONS
1-1-09	Switched units to English (metric).
1-1-08	Revised General Notes, revised Plate Washer F.

TRAFFIC BARRIER TERMINAL-TYPE 5R

(Sheet 1 of 2)

STANDARD B.L.R. 20-6

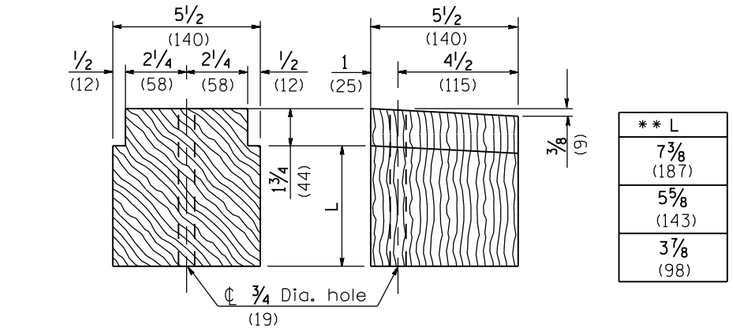

** L
7⅜ (187)
5⅝ (143)
3⅞ (98)

TREATED TIMBER BLOCKING

** Approximate Lengths Field Verify

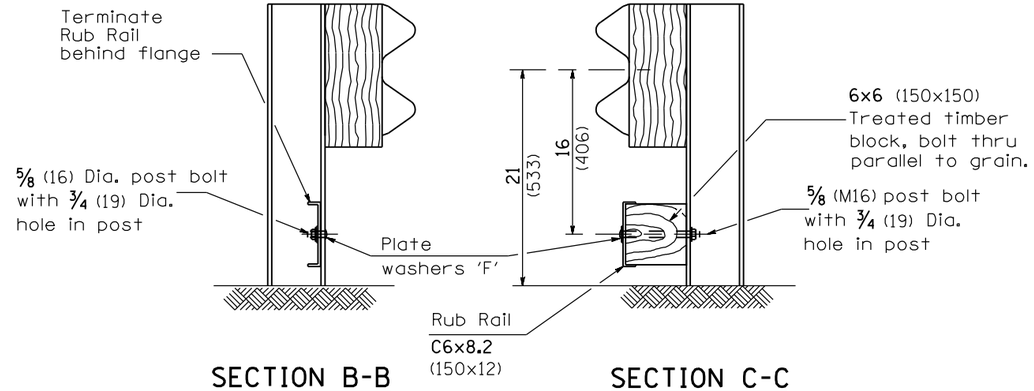

SECTION B-B

SECTION C-C

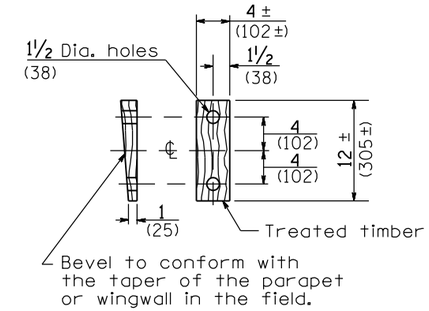

WEDGE M

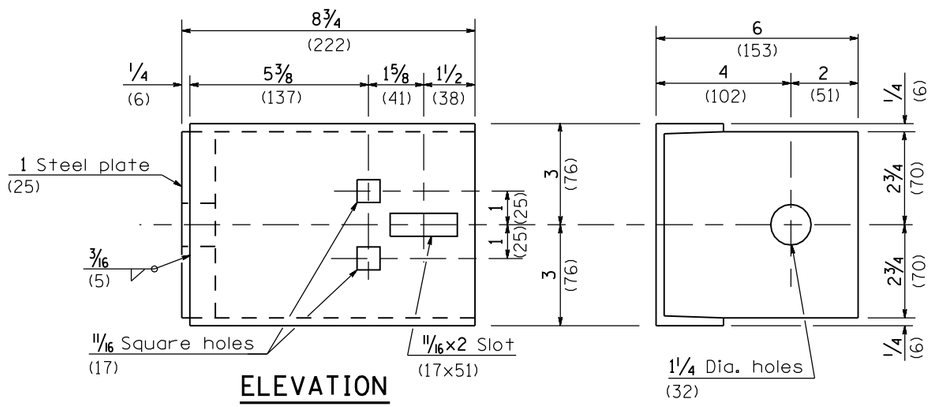

ELEVATION

END VIEW

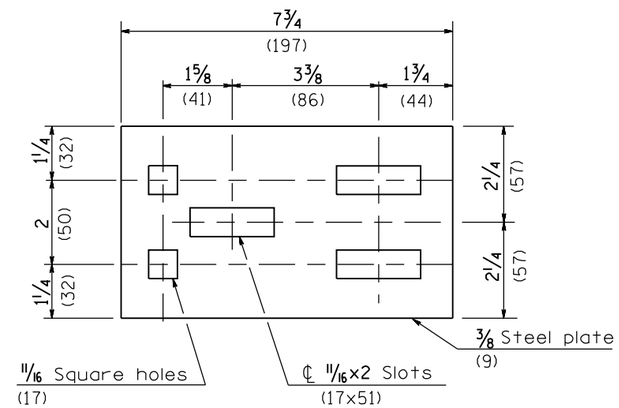

SPLICE PLATE 'R-3'

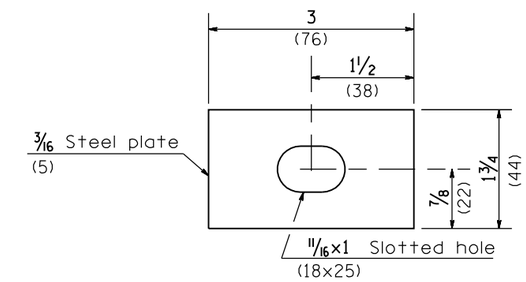

PLATE WASHER F

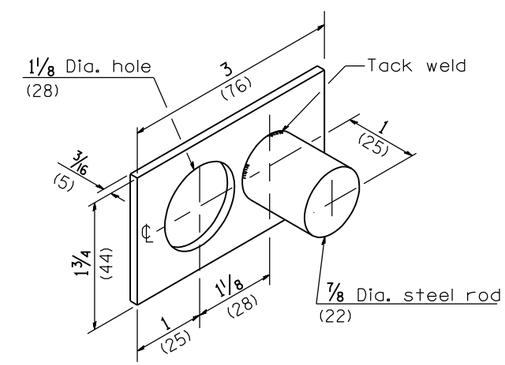

PLATE WASHER D

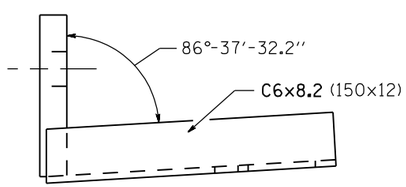

PLAN

RUB RAIL PLATE R-1

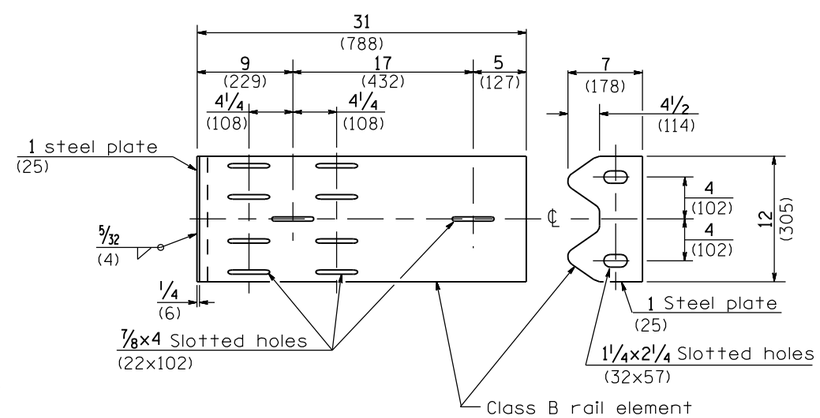

PLATE G

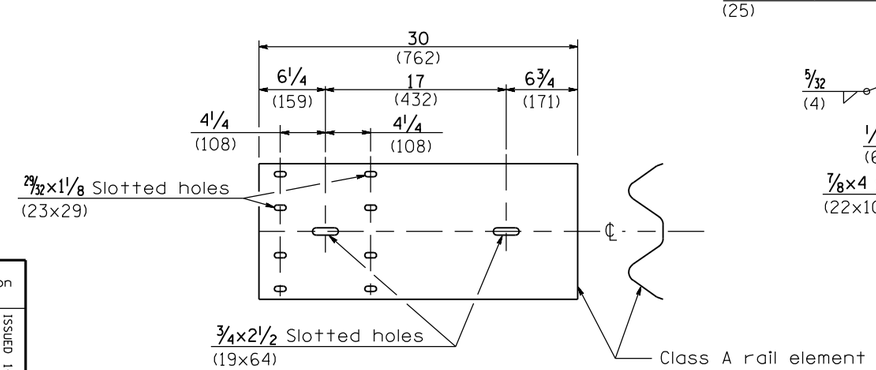

PLATE E

Illinois Department of Transportation

APPROVED January 1, 2009
ENGINEER OF LOCAL ROADS AND STREETS

APPROVED January 1, 2009
ENGINEER OF DESIGN AND ENVIRONMENT

ISSUED 1-1-97

TRAFFIC BARRIER TERMINAL-TYPE 5R

(Sheet 2 of 2)

STANDARD B.L.R. 20-6

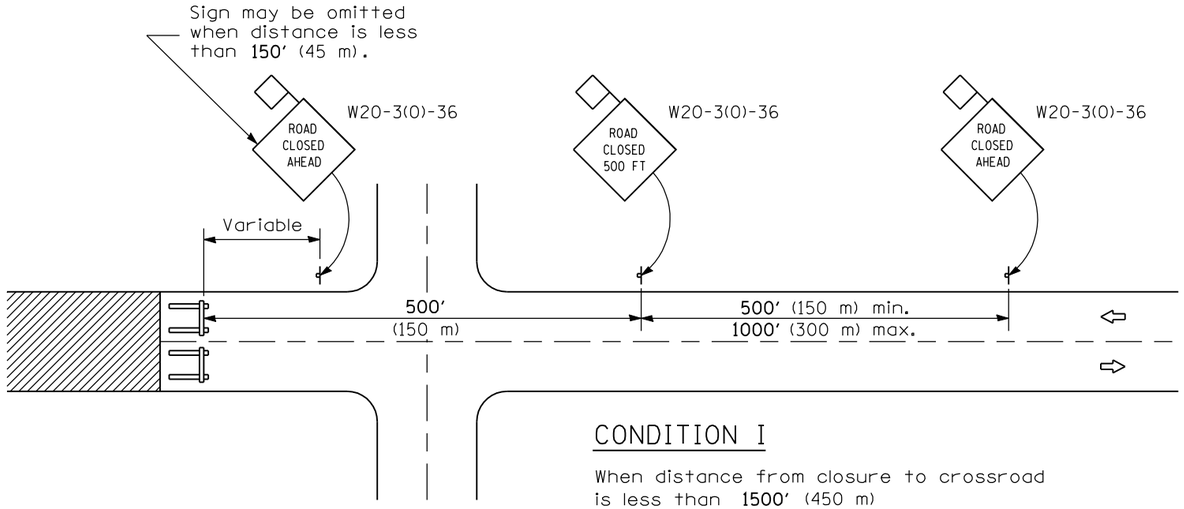

CONDITION I

When distance from closure to crossroad is less than **1500′** (450 m)

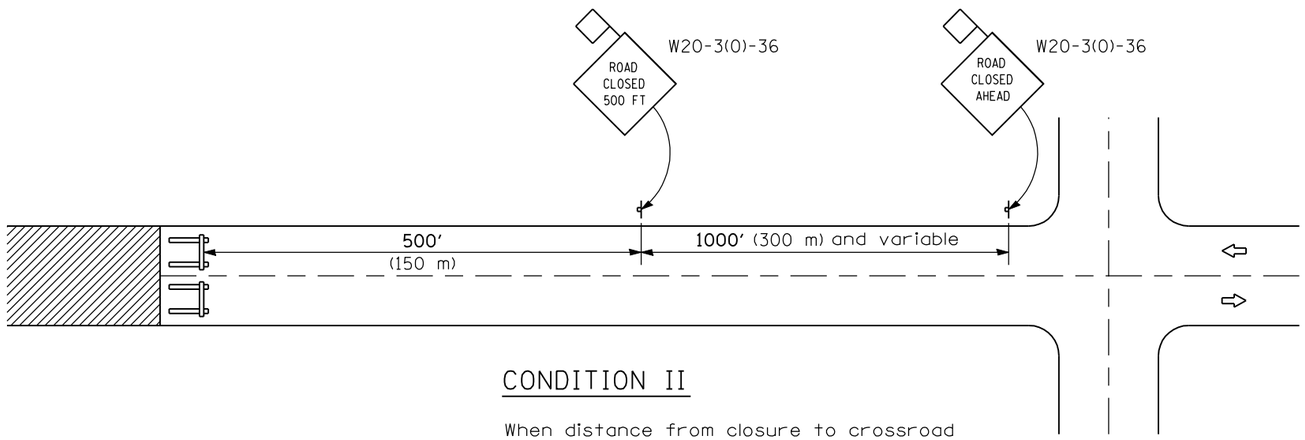

CONDITION II

When distance from closure to crossroad is greater than **1500′** (450 m)

SYMBOLS

Work area

Type III Barricade

Sign with **18x18** (450x450) min. orange flag attached

GENERAL NOTES

Type III Barricades and R11-2-4830 signs shall be positioned as shown in "Road Closed To All Traffic" detail on Highway Standard 701901.

Two Type A Low Intensity Flashing Lights shall be used on each approach in advance of the work area during hours of darkness. One light shall be installed above the barricades and the other above the first advance warning sign.

All signs shall be post mounted if the closure time exceeds four days.

All warning signs shall have minimum dimensions of 36 x 36 (900 x 900) and have a black legend on an orange reflectorized background.

All work zone signs are required to meet, as a minimum, Type B reflectivity requirements of Table 1091-2 in Article 1091.02 of the Standard Specifications.

When fluorescent signs are used, orange flags are not required.

Longitudinal dimensions may be adjusted to fit field conditions.

When the distance between the barricade and the intersection is between 1500′ (450 m) and 2000′ (600 m), the advance sign shall be placed at the intersection. When the distance between the barricade and the intersection is over 2000′ (600 m), an additional sign shall be placed at the intersection. The additional sign shall give the distance to the barricade in miles or fractions of a mile.

All dimensions are in inches (millimeters) unless otherwise shown.

Illinois Department of Transportation

APPROVED January 1, 2009
ENGINEER OF LOCAL ROADS AND STREETS

APPROVED January 1, 2009
ENGINEER OF DESIGN AND ENVIRONMENT

ISSUED 1-1-97

DATE	REVISIONS
1-1-09	Switched units to
	English (metric).
1-1-08	Revised General Notes
	to reference Standard
	701901.

TYPICAL APPLICATION OF TRAFFIC CONTROL DEVICES FOR CONSTRUCTION ON RURAL LOCAL HIGHWAYS

STANDARD B.L.R. 21-8

CONDITION I
APPROACH TRAFFIC STOPPED

CONDITION II
APPROACH TRAFFIC DOES NOT STOP

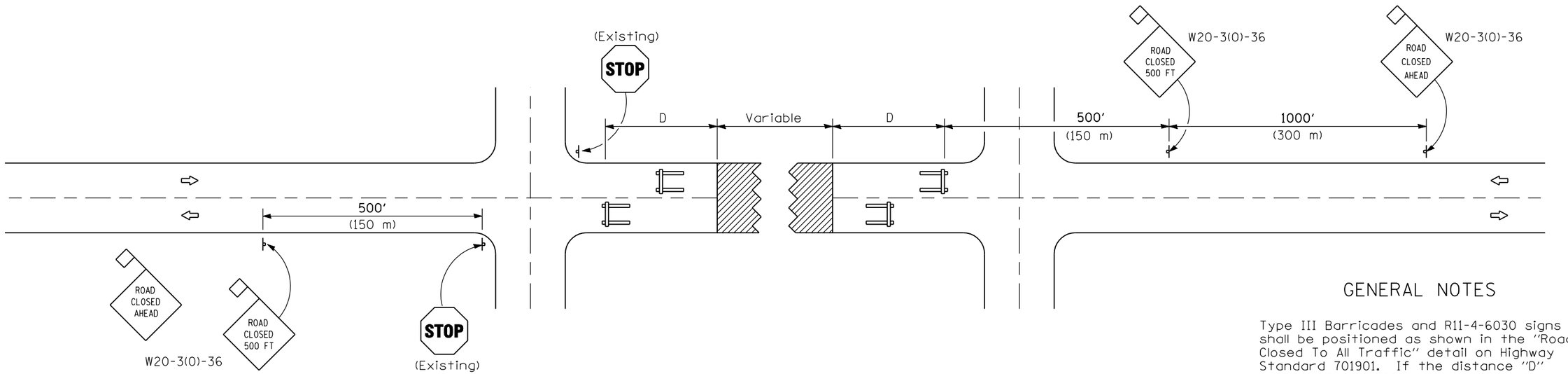

SYMBOLS

Work area

Type III Barricade

Sign with 18x18 (450x450) min. orange flag attached

GENERAL NOTES

Type III Barricades and R11-4-6030 signs shall be positioned as shown in the "Road Closed To All Traffic" detail on Highway Standard 701901. If the distance "D" exceeds 2000′ (600 m), an additional set of barricades and R11-4-6030 shall be placed at each end of the work area.

Two Type A Low Intensity Flashing Lights shall be used on each approach in advance of the work area. One light shall be installed above each barricade. If only one barricade is required, the other light shall be installed above the first advance warning sign.

All signs shall be post mounted if the closure time exceeds four days.

All warning signs shall have minimum dimensions of 36 x 36 (900 x 900) and have a black legend on an orange reflectorized background.

All work zone signs are required to meet, as a minimum, Type B reflectivity requirements of Table 1091-2 in Article 1091.02 of the Standard Specifications.

When fluorescent signs are used, orange flags are not required.

Longitudinal dimensions may be adjusted to fit field conditions.

All dimensions are in inches (millimeters) unless otherwise shown.

Illinois Department of Transportation

APPROVED January 1, 2009
ENGINEER OF LOCAL ROADS AND STREETS

APPROVED January 1, 2009
ENGINEER OF DESIGN AND ENVIRONMENT

ISSUED 1-1-97

DATE	REVISIONS
1-1-09	Revised General Notes
	and switched units to
	English (metric).
1-1-08	Revised General Notes
	to reference Standard
	701901.

TYPICAL APPLICATION OF TRAFFIC CONTROL DEVICES FOR CONSTRUCTION ON RURAL LOCAL HIGHWAYS

(TWO-LANE TWO WAY RURAL TRAFFIC)
(ROAD CLOSED TO THRU TRAFFIC)

STANDARD B.L.R. 22-6

OFFSETS TO FACE OF RAIL		
Post	X ft (m)	Y ft (m)
①	37.22 (11.345)	4.0 (1.22)
②	31.09 (9.475)	2.79 (0.850)
③	24.92 (7.595)	1.79 (0.545)
④	20.79 (6.335)	1.25 (0.380)
⑤	16.64 (5.070)	0.80 (0.245)
⑥	12.49 (3.805)	0.45 (0.135)
⑦	6.25 (1.905)	0.11 (0.035)
⑧	0.00 (0.00)	0.00 (0.00)

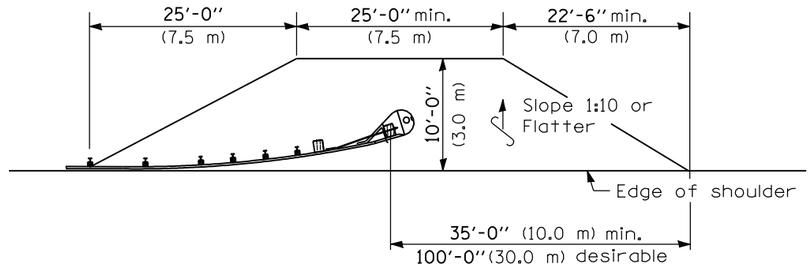

SHOULDER WIDENING TRANSITION

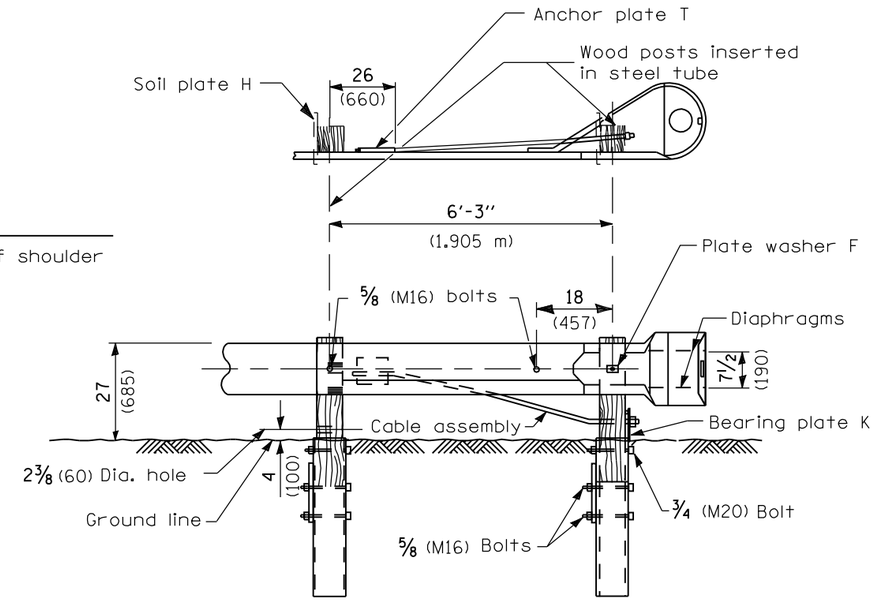

WOOD BREAKAWAY POSTS
TUBULAR STEEL FOUNDATIONS

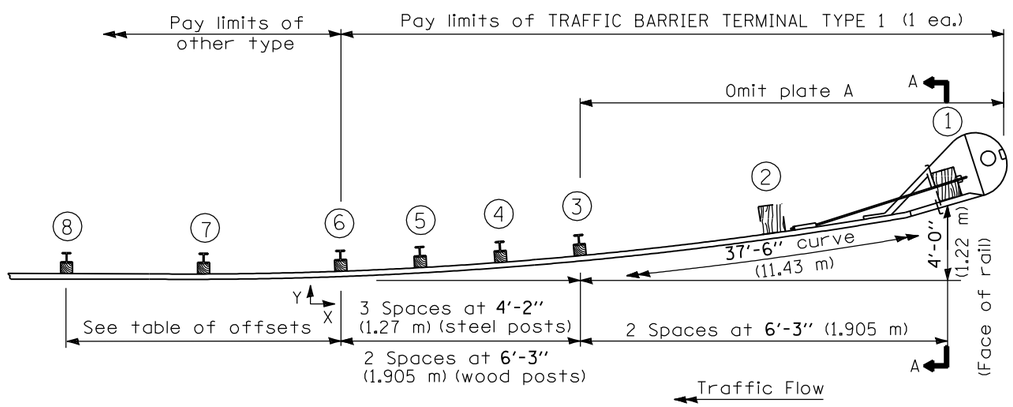

PLAN

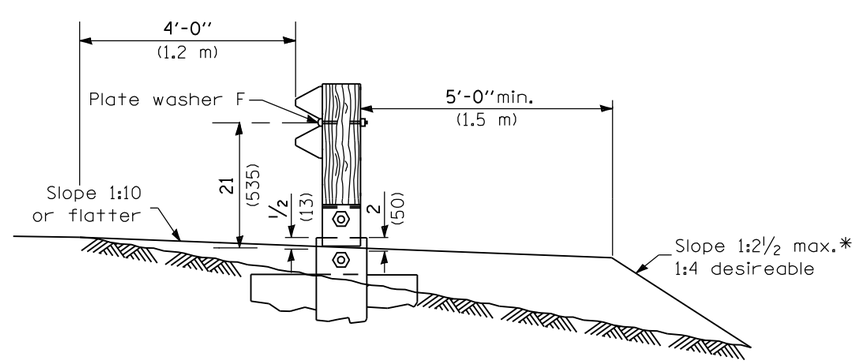

SECTION A-A

* If fill height exceeds 5'-0" (1.5 m) use 1:3 max.

GENERAL NOTES

See Standard B.L.R. 26 for details of guardrail not shown.

Posts at location 1 & 2 shall be wood breakaway posts. Posts other than 1 & 2 may be either standard wood posts or steel posts, at the option of the Contractor. If standard wood posts are used, one post shall be located midway between and in lieu of posts 4 & 5. The offset (Y) for this post shall be 12 (300).

A two-piece assembly may be substituted for the one piece nose shown above.

The bearing plate K shall be held in position by (2) two eightpenny nails driven into the post and bent over the top of the plate.

When this terminal is used with Standard 630001, the guardrail shall transition down to the height of the terminal prior to post 8.

All slope ratios are expressed as units of vertical displacement to units of horizontal displacement (V:H).

All dimensions are in inches (millimeters) unless otherwise shown.

Illinois Department of Transportation

APPROVED January 1, 2009
ENGINEER OF LOCAL ROADS AND STREETS
APPROVED January 1, 2009
ENGINEER OF DESIGN AND ENVIRONMENT

ISSUED 1-1-08

DATE	REVISIONS
1-1-09	Switched units to
	English (metric).
1-1-08	Added plate washer F
	detail. Revised General
	Notes.

TRAFFIC BARRIER TERMINAL TYPE 1

(Sheet 1 of 2)

STANDARD B.L.R. 23-3

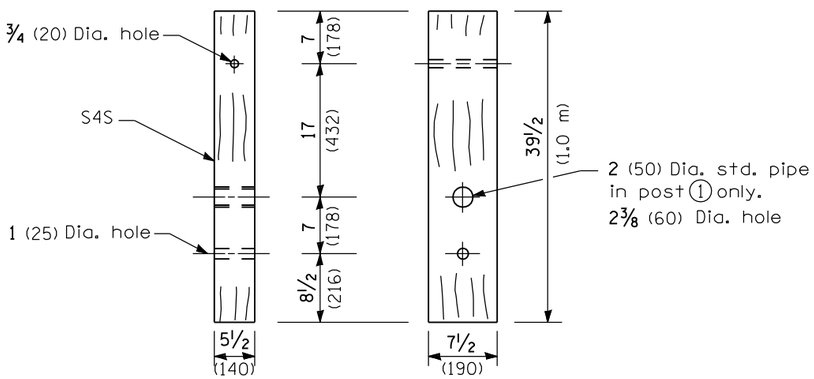

WOOD BREAKAWAY POST

(2 ea.)

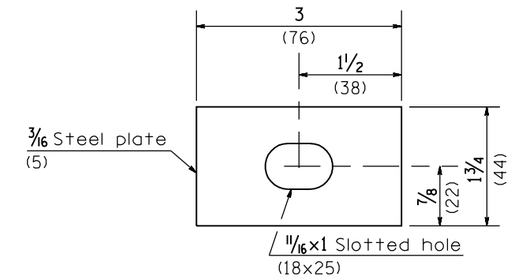

PLATE WASHER F

(1 ea.)

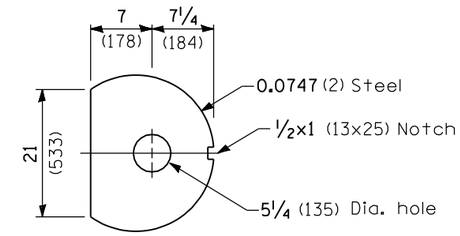

DIAPHRAGM

(2 ea.)

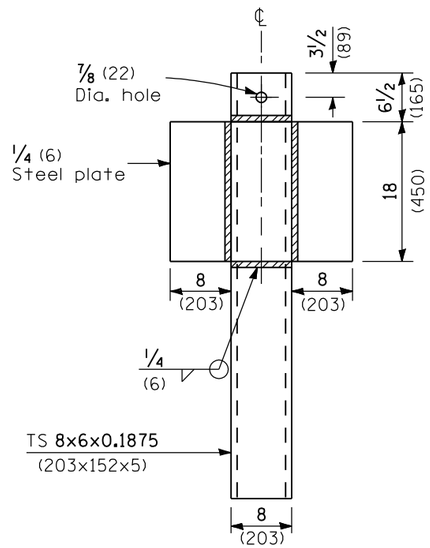

ALTERNATE SOIL PLATE CONNECTION

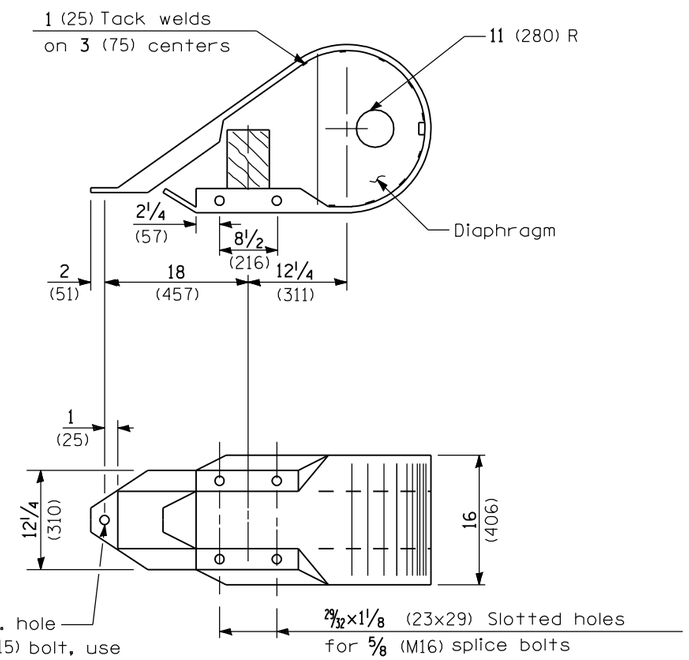

NOSE

(1 ea.)

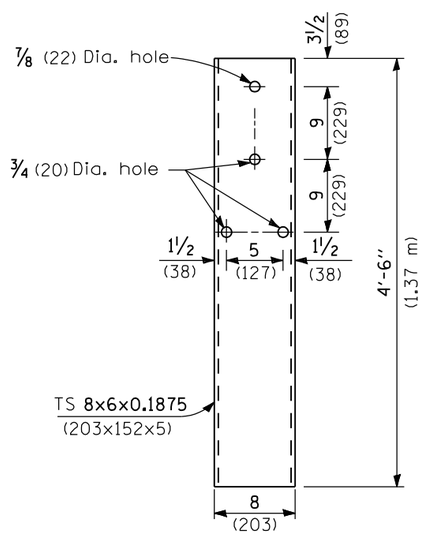

STEEL TUBE

(2 ea.)

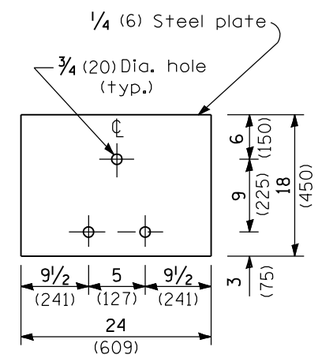

SOIL PLATE H

(2 ea.)

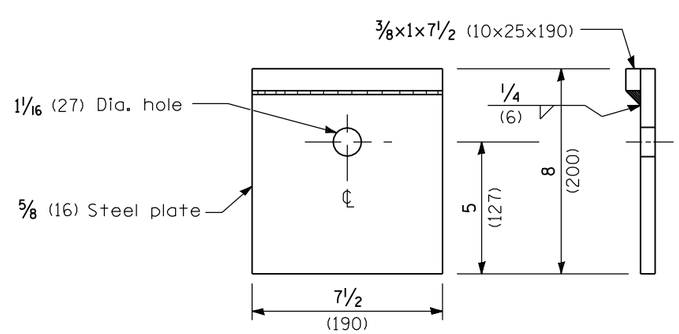

BEARING PLATE K

(1 ea.)

Illinois Department of Transportation

APPROVED January 1, 2009
ENGINEER OF LOCAL ROADS AND STREETS
APPROVED January 1, 2009
ENGINEER OF DESIGN AND ENVIRONMENT

ISSUED 1-1-08

TRAFFIC BARRIER TERMINAL TYPE 1

(Sheet 2 of 2)

STANDARD B.L.R. 23-3

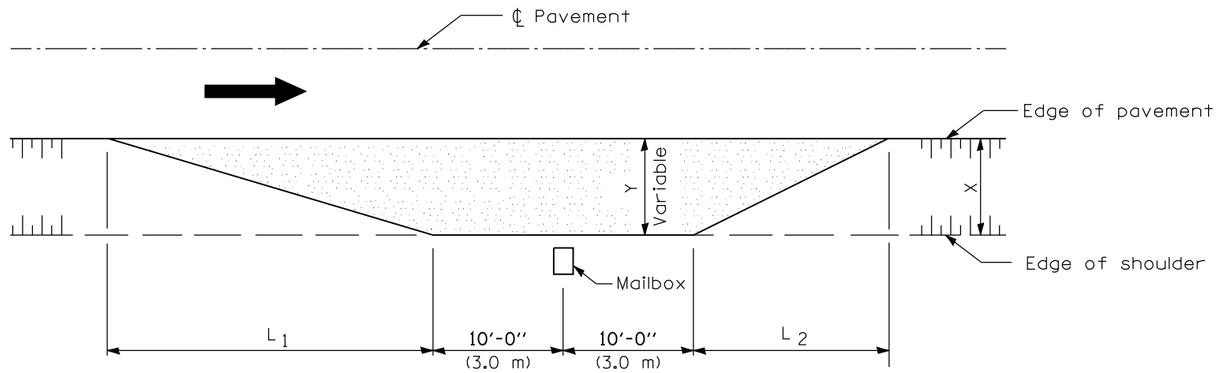

TYPICAL APPLICATION

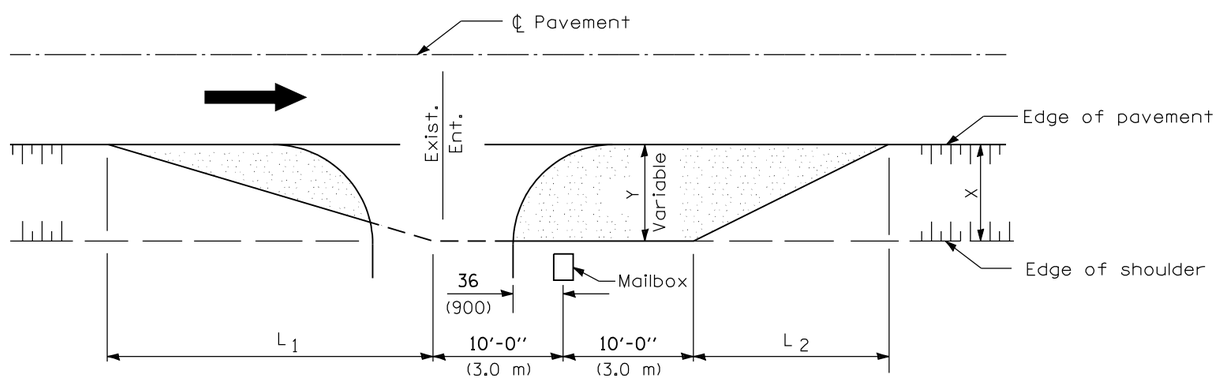

MAILBOX ON FARSIDE OF ENTRANCE

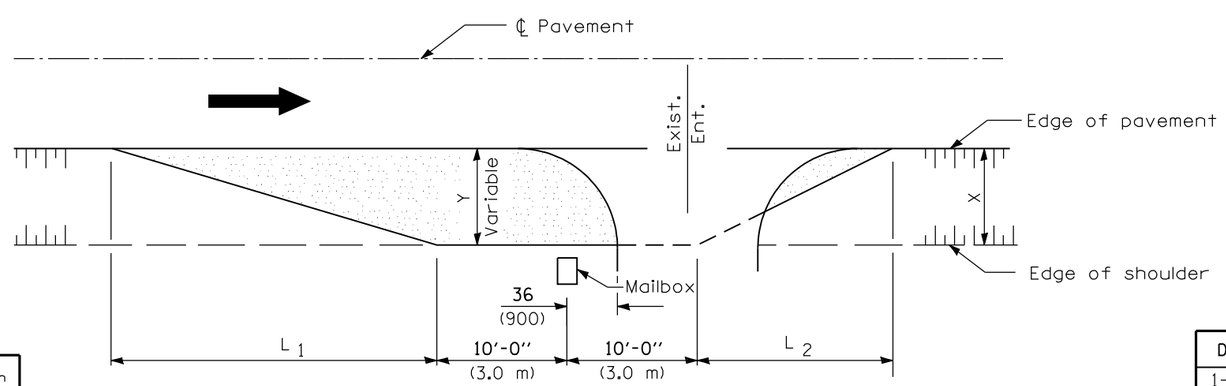

MAILBOX ON NEARSIDE OF ENTRANCE

DIMENSIONS - ft. (m)						
Width of Shoulder (X)	12 (3.6)	10 (3.0)	8 (2.4)	6 (1.8)	5 (1.5)	4 (1.2)
Width of Turnout (Y)	8 (2.4)	8 (2.4)	6 (1.8)	4 (1.2)	4 (1.2)	4 (1.2)
L_1	30 (9.0)	30 (9.0)	23 (6.9)	15 (4.5)	15 (4.5)	15 (4.5)
L_2	20 (6.0)	20 (6.0)	15 (4.5)	10 (3.0)	10 (3.0)	10 (3.0)

Note: Dimensions for Township and District Roads may vary from the above dimensions.

GENERAL NOTES

Mailboxes shall be mounted such that the face of the mailbox is 6 (150) to 12 (300) and the post a minimum of 24 (600) from the edge of the turnout surfacing.

All dimensions are in inches (millimeters) unless otherwise shown.

Illinois Department of Transportation

APPROVED January 1, 2009
ENGINEER OF LOCAL ROADS AND STREETS
APPROVED January 1, 2009
ENGINEER OF DESIGN AND ENVIRONMENT

ISSUED 1-1-97

DATE	REVISIONS
1-1-09	Switched units to
	English (metric).
1-1-99	Add width of shoulder X.

MAILBOX TURNOUT FOR LOCAL ROADS

STANDARD B.L.R. 24-2

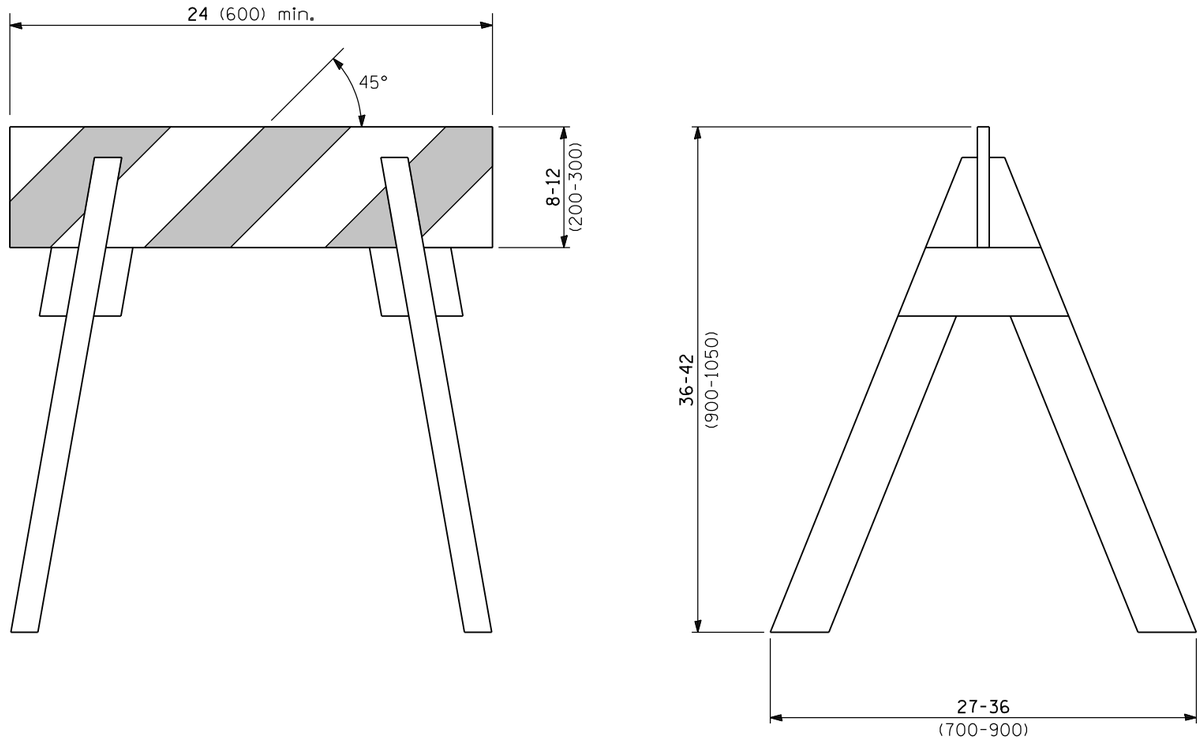

All dimensions are in inches (millimeters) unless otherwise shown.

Illinois Department of Transportation

APPROVED January 1, 2009
ENGINEER OF LOCAL ROADS AND STREETS

APPROVED January 1, 2009
ENGINEER OF DESIGN AND ENVIRONMENT

ISSUED 1-1-03

DATE	REVISIONS
1-1-09	Switched units to
	English (metric).
1-1-03	New standard from
	702001-02

TYPE 1A BARRICADE FOR NON-NHS ROUTES

STANDARD B.L.R. 25–1

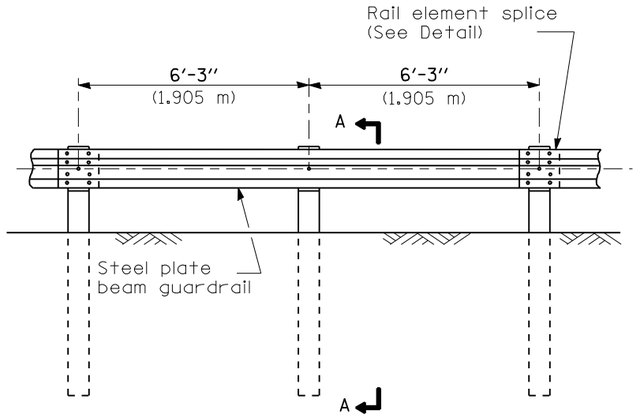

ELEVATION

TYPE A

6'-3" (1.905 m) Typical post spacing

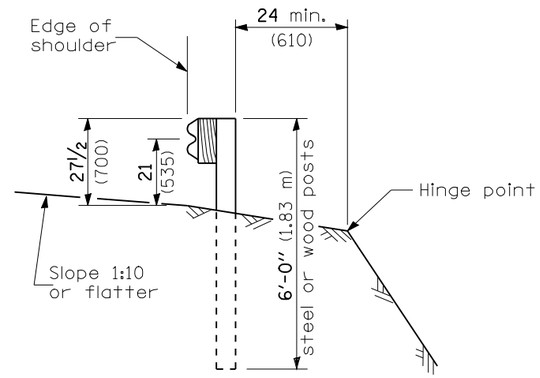

SECTION A-A

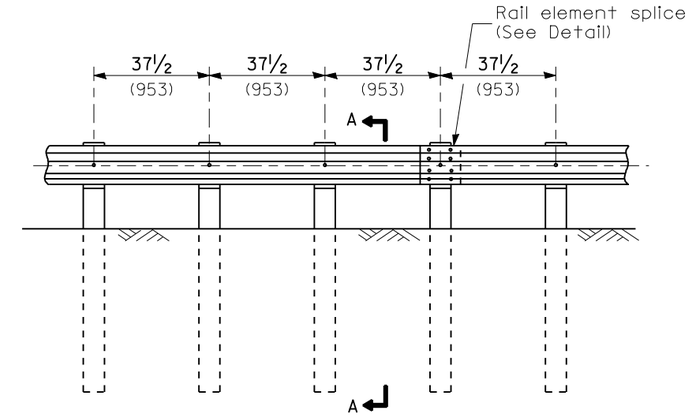

ELEVATION

TYPE B

37½ (953) Closed post spacing

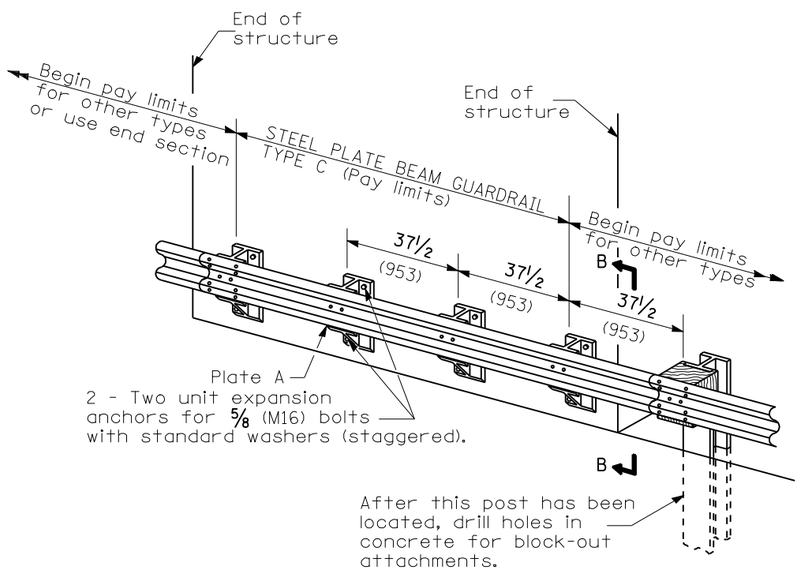

TYPE C

37½ (953) Block-out spacing

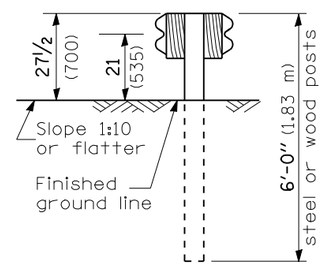

SECTION C-C

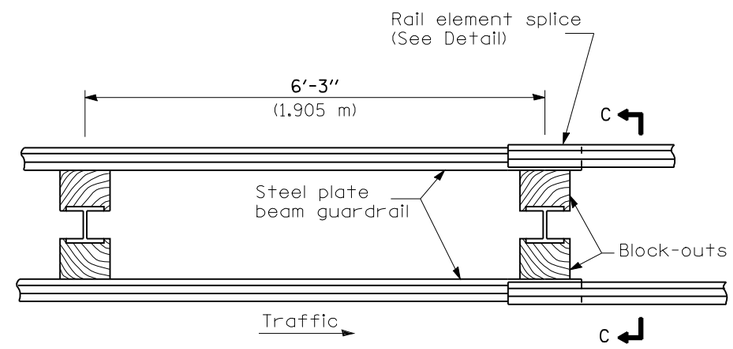

PLAN

TYPE D

Double steel plate beam guardrail
6'-3" (1.905 m) typical post spacing

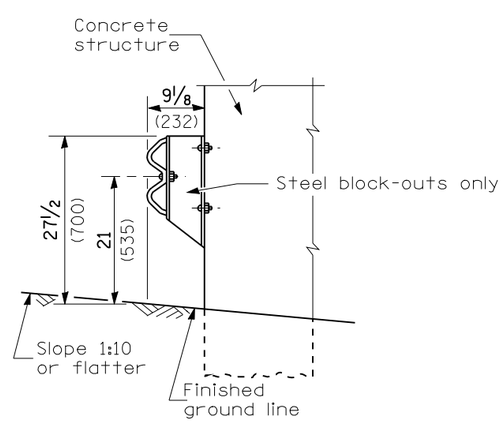

SECTION B-B

GENERAL NOTES

All slope ratios are expressed as units of vertical displacement to units of horizontal displacement (V:H).

All dimensions are in inches (millimeters) unless otherwise shown.

Illinois Department of Transportation

APPROVED January 1, 2010
ENGINEER OF LOCAL ROADS AND STREETS

APPROVED January 1, 2010
ENGINEER OF DESIGN AND ENVIRONMENT

ISSUED 1-1-08

DATE	REVISIONS
1-1-10	Changed post lenght
	from 6'-9" to 6'-0".
	Modified table on sh. 4.
1-1-09	Switched units to
	English (metric).

STEEL PLATE BEAM GUARDRAIL 27½" (700mm) HEIGHT

(Sheet 1 of 4)

STANDARD B.L.R. 26-2

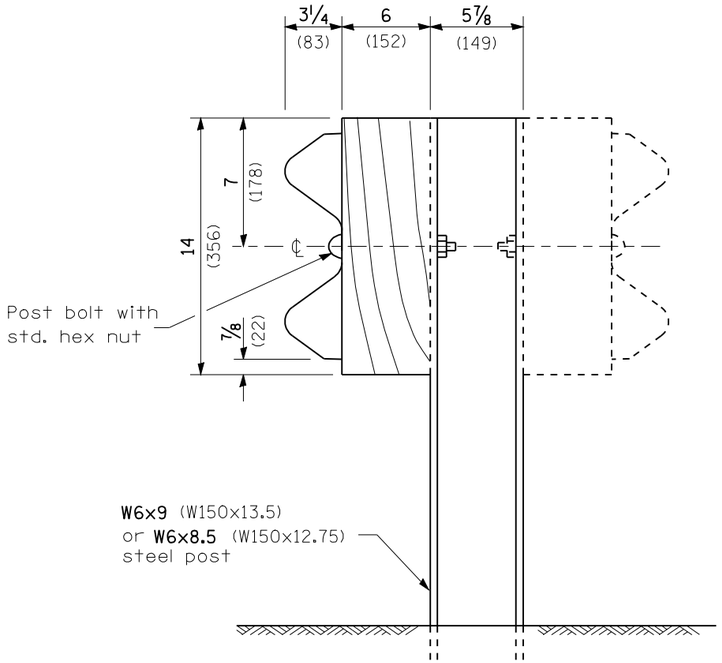

STEEL POST CONSTRUCTION

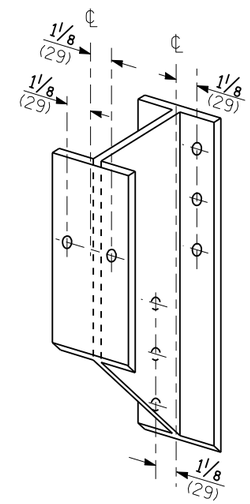

STEEL BLOCK-OUT DETAIL

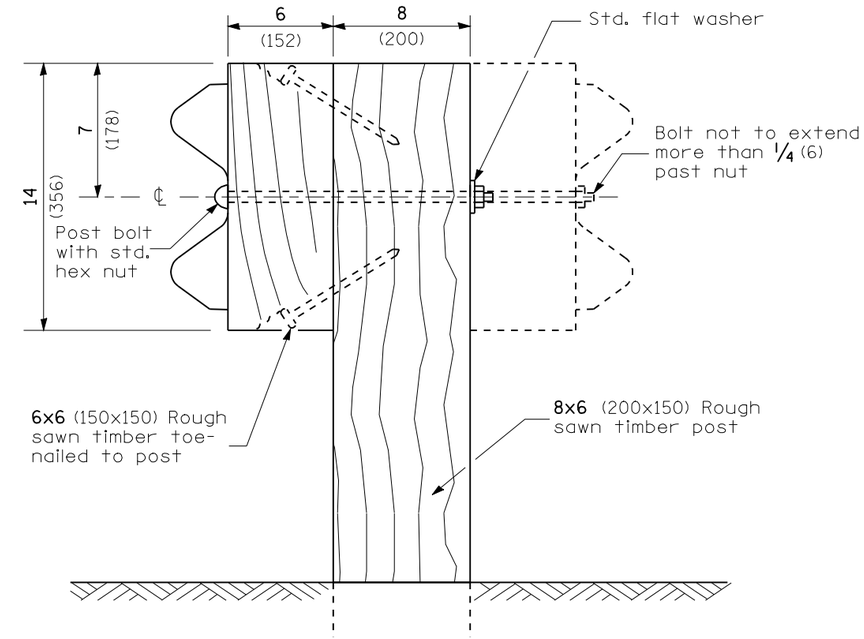

WOOD POST CONSTRUCTION

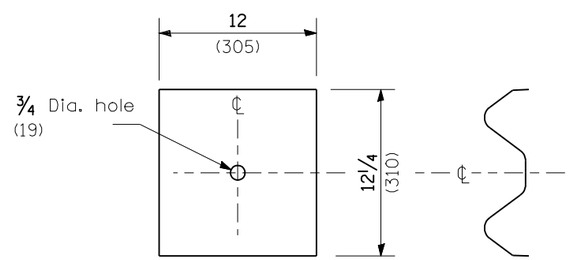

NOTE

Plate A shall be placed between rail element and block-out at non-splice mounting points only when steel block-outs are used.

PLATE A

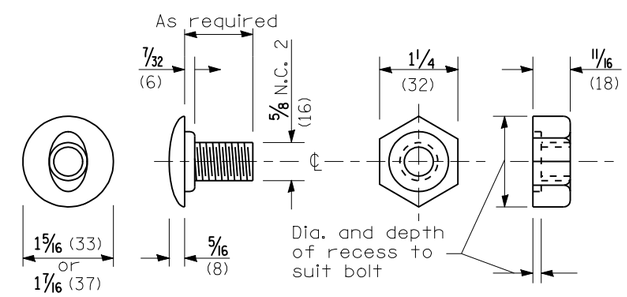

POST OR SPLICE BOLT & NUT

Illinois Department of Transportation

APPROVED January 1, 2010
ENGINEER OF LOCAL ROADS AND STREETS

APPROVED January 1, 2010
ENGINEER OF DESIGN AND ENVIRONMENT

ISSUED 1-1-08

STEEL PLATE BEAM GUARDRAIL
27½" (700mm) HEIGHT
(Sheet 2 of 4)

STANDARD B.L.R. 26–2

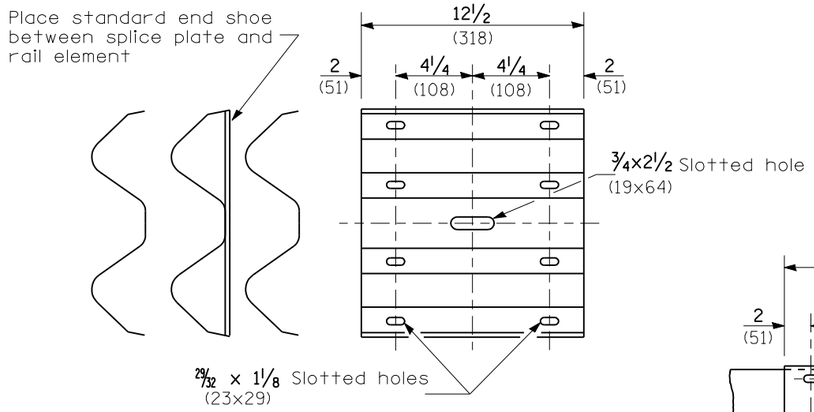

SPLICE PLATE

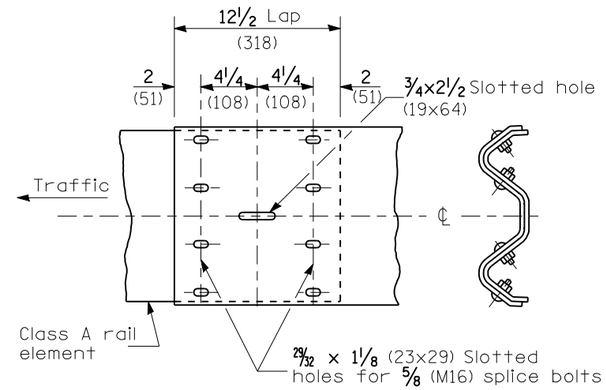

RAIL ELEMENT SPLICE

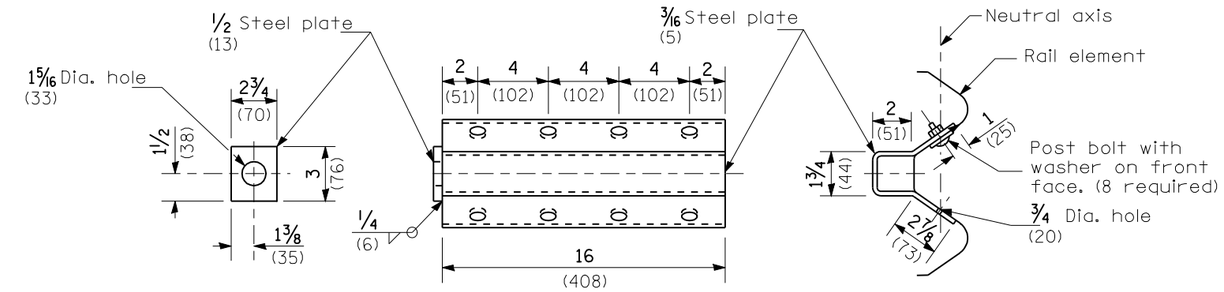

NOTE

Anchor plate T shall be used to attach cable assembly to guardrail when required on traffic barrier terminals.

ANCHOR PLATE T DETAILS

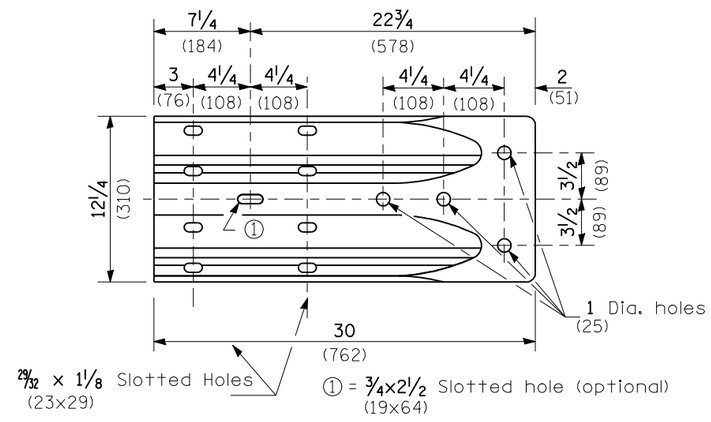

ALTERNATE END SHOE

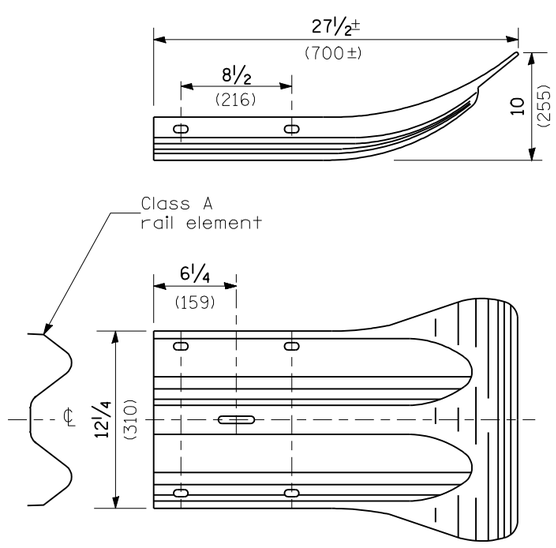

END SECTION

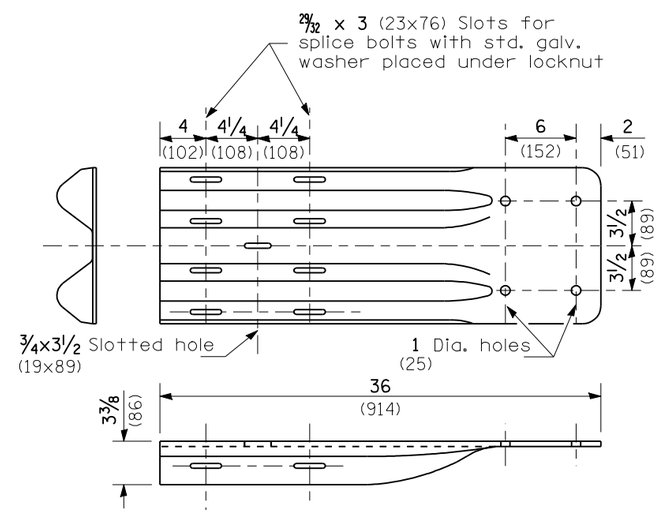

NOTE

When end shoe is attached to a bridge parapet which has an expansion joint, the bolts shall be provided with a locknut or double nut and shall be tightened only to a point that will allow guardrail movement.

The standard end shoe shall be attached to the concrete with pre-drilled or self-drilling anchor bolts. The anchor cone shall be set flush with the surface of the concrete.

Externally threaded studs protruding from the surface of the concrete will not be permitted.

END SHOE

Illinois Department of Transportation

APPROVED January 1, 2010
ENGINEER OF LOCAL ROADS AND STREETS

APPROVED January 1, 2010
ENGINEER OF DESIGN AND ENVIRONMENT

ISSUED 1-1-08

STEEL PLATE BEAM GUARDRAIL
27 1/2" (700mm) HEIGHT
(Sheet 3 of 4)

STANDARD B.L.R. 26-2

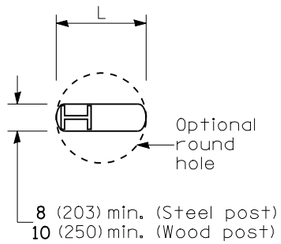

PLAN

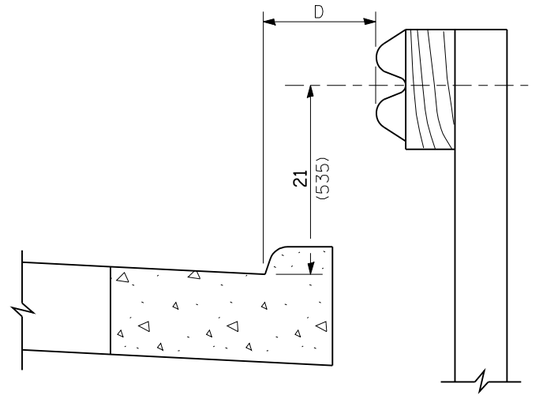

Note:
If it is necessary for D to be more than 12 (300) and less than 10'-0" (3.0 m), Type M-2 (M-5) curb and gutter (Std. 606001) shall be used in front of and in advance of the guardrail.

GUARDRAIL PLACED BEHIND CURB

(D = 0 desirable to 12 (300) maximum)

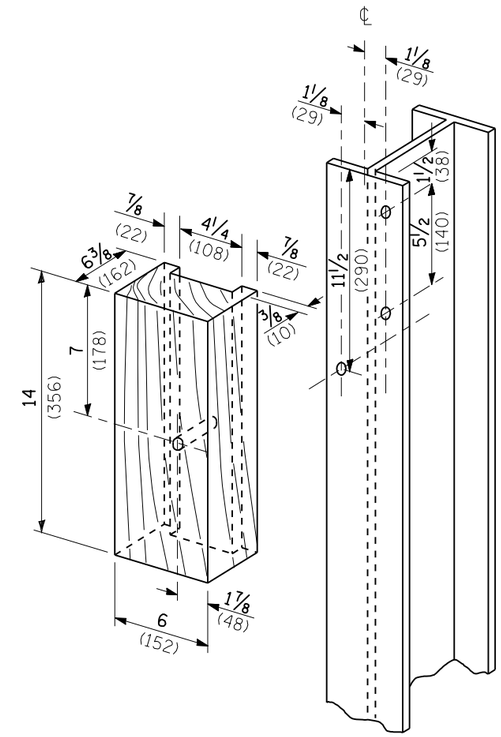

WOOD BLOCK-OUT AND STEEL POST DETAILS

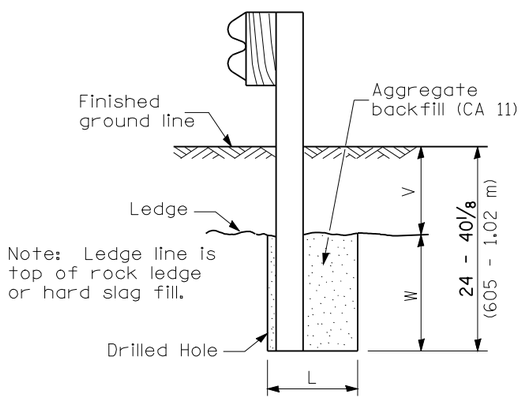

ELEVATION

FOOTING FOR POST WHEN IMPERVIOUS MATERIAL IS ENCOUNTERED

V	W	L	
		Steel Post	Wood Post
0 - 16 1/8 (0 - 410)	24 (610)	21 (530)	23 (580)
>16 1/8 - 28 1/8 (>410 - 714)	12 (305)	8 (203)	10 (250)
>28 1/8 - 40 1/8 (>714 - 1.02 m)	12 - 0 (305 - 0)	8 (203)	10 (250)

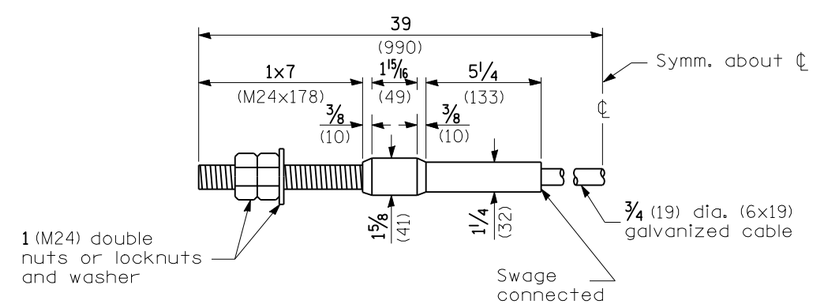

CABLE ASSEMBLY

(40,000 lbs. (18,100 kg) min. breaking strength)
Tighten to taut tension.

Illinois Department of Transportation

APPROVED January 1, 2010
ENGINEER OF LOCAL ROADS AND STREETS
APPROVED January 1, 2010
ENGINEER OF DESIGN AND ENVIRONMENT

ISSUED 1-1-08

STEEL PLATE BEAM GUARDRAIL
27 1/2" (700mm) HEIGHT
(Sheet 4 of 4)

STANDARD B.L.R. 26-2

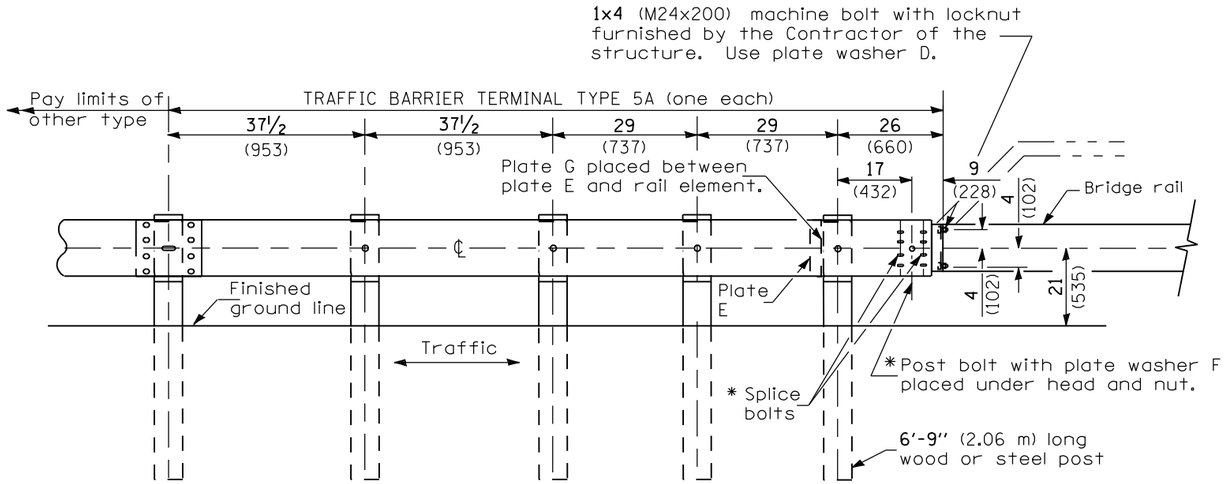

TYPE 5A - STEEL BRIDGE RAIL

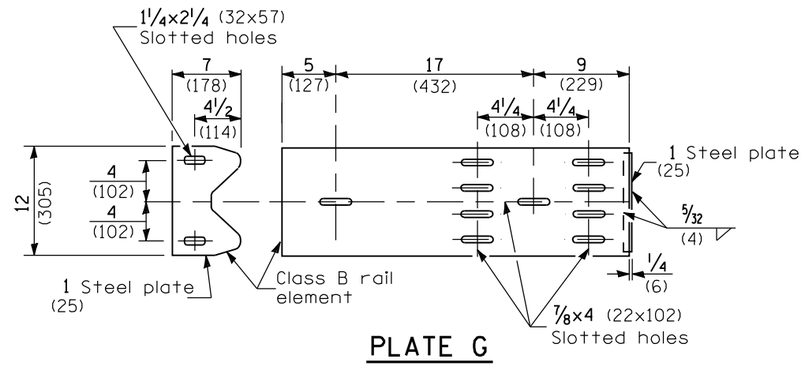

PLATE G

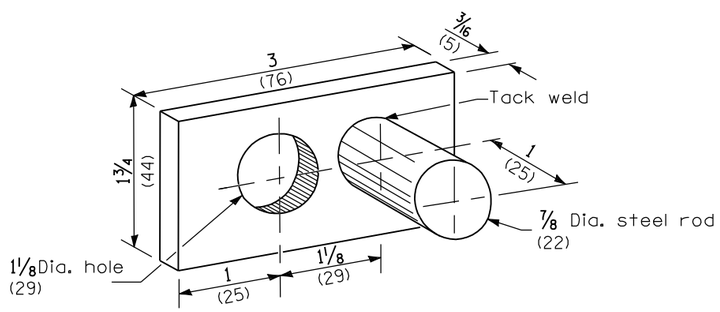

PLATE WASHER D

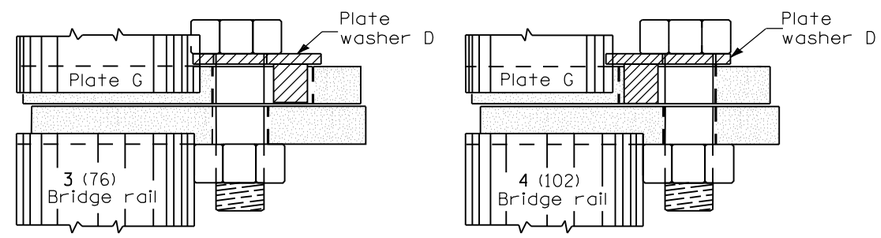

PLACEMENT OF PLATE WASHER D

(PLAN)

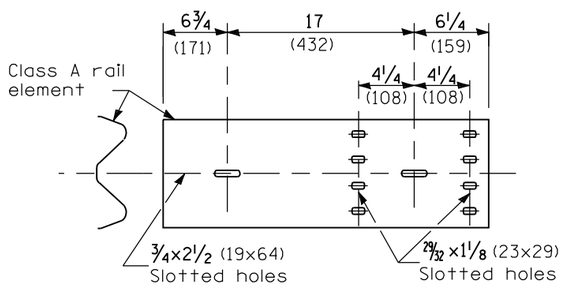

PLATE E

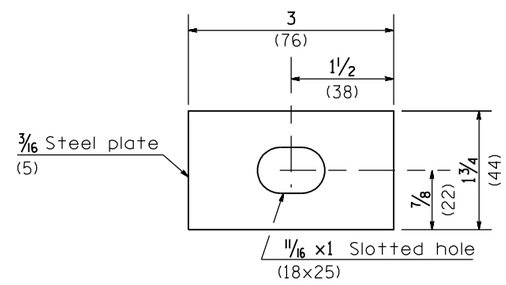

PLATE WASHER F

GENERAL NOTES

See Standard B.L.R. 26 for details of guardrail not shown.

Install plate washer D so the 1 (25) projection fills the remainder of the slotted holes in the 1 (25) end plate on plate G after the 1 (M24) dia. bolts are in place.

* When an expansion joint exists below the connector, bolts shall be provided with a locknut or double nuts and shall be tightened only to a point that will allow plate G to be free to move.

The face of the guardrail shall be installed flush with the face of the bridge rail.

When this terminal is used with Standard 630001, the guardrail shall transition down to the height of the terminal.

All dimensions are in inches (millimeters) unless otherwise shown.

Illinois Department of Transportation

APPROVED January 1, 2009
ENGINEER OF LOCAL ROADS AND STREETS
APPROVED January 1, 2009
ENGINEER OF DESIGN AND ENVIRONMENT

ISSUED 1-1-08

DATE	REVISIONS
1-1-09	Switched units to
	English (metric).
1-1-08	New Standard. Was part
	of Std. 631026 prior to
	January 1, 2007.

TRAFFIC BARRIER TERMINAL TYPE 5A

STANDARD B.L.R. 27-1