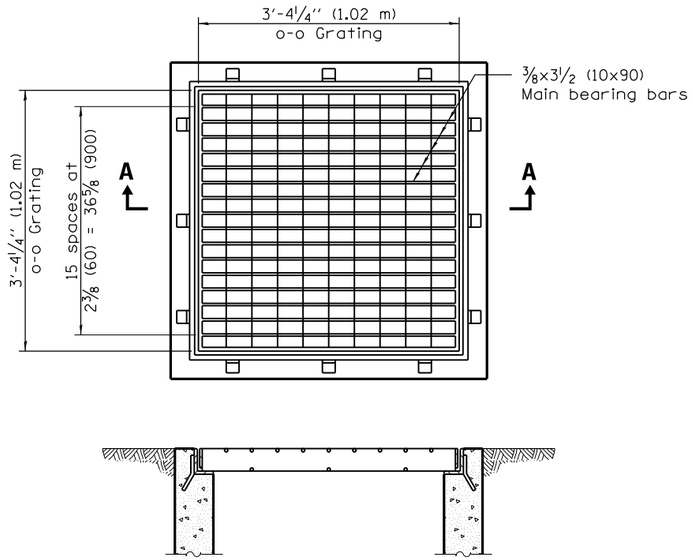

SECTION A–A

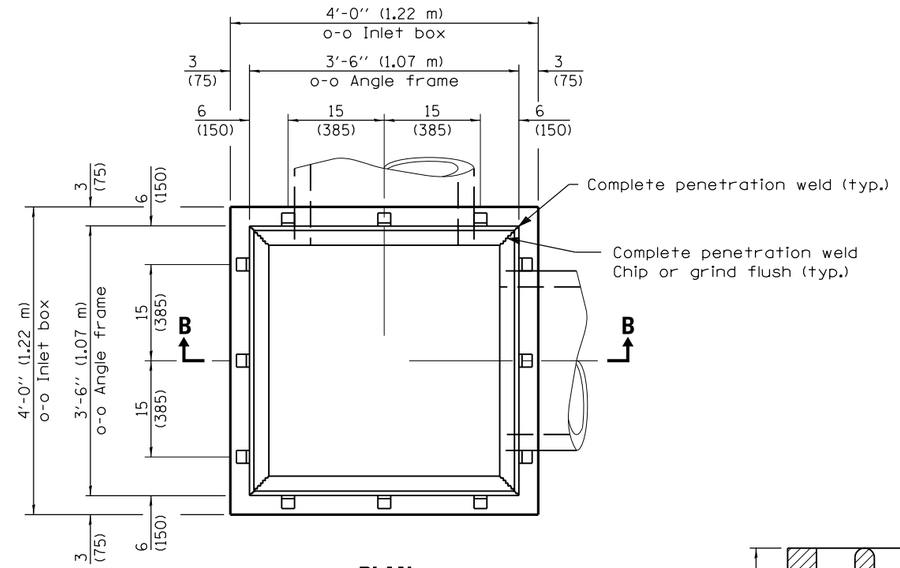

PLAN
(Grating omitted for clarity)

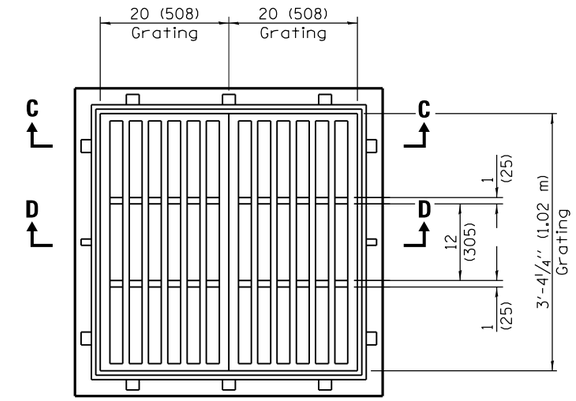

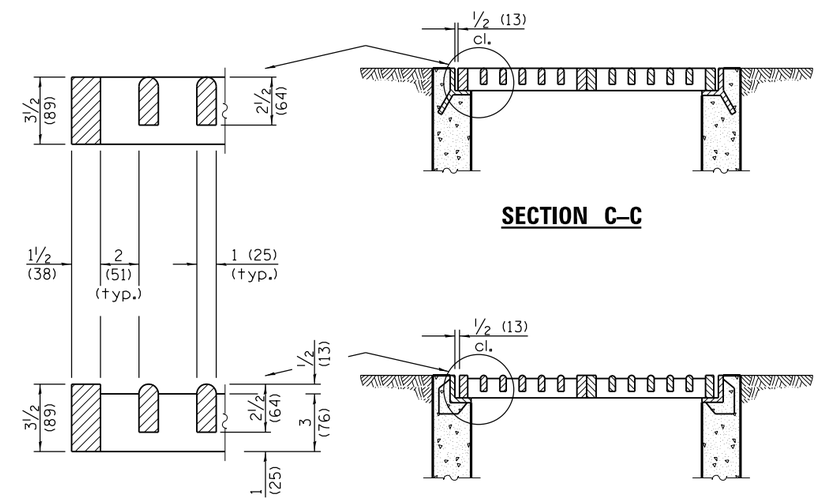

SECTION C–C

SECTION D–D
CAST FRAME & GRATE

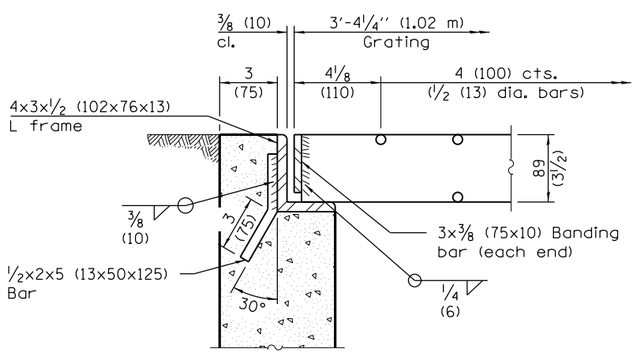

STEEL FRAME & GRATE

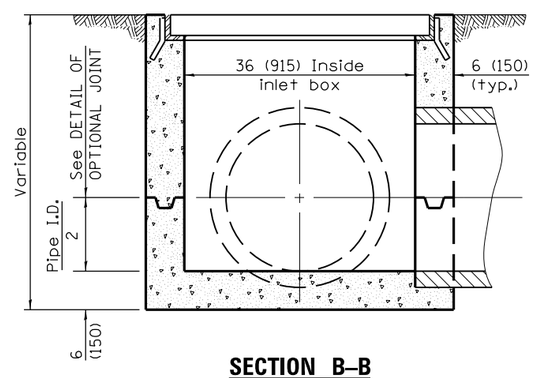

SECTION B–B

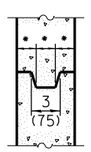

DETAIL of
OPTIONAL JOINT

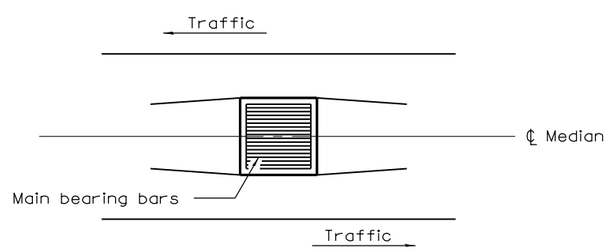

Sketch showing location and direction of main bearing bars in relation to ℄ median

All dimensions are in inches (millimeters) unless otherwise shown.

Illinois Department of Transportation

PASSED January 1, 2009
ENGINEER OF POLICY AND PROCEDURES
APPROVED January 1, 2009
ENGINEER OF DESIGN AND ENVIRONMENT

ISSUED 1-1-97

DATE	REVISIONS
1-1-09	Switched units to
	English (metric).
1-1-97	Renum. Standard 2240-6.

FLUSH INLET BOX FOR MEDIAN

STANDARD 542546–01