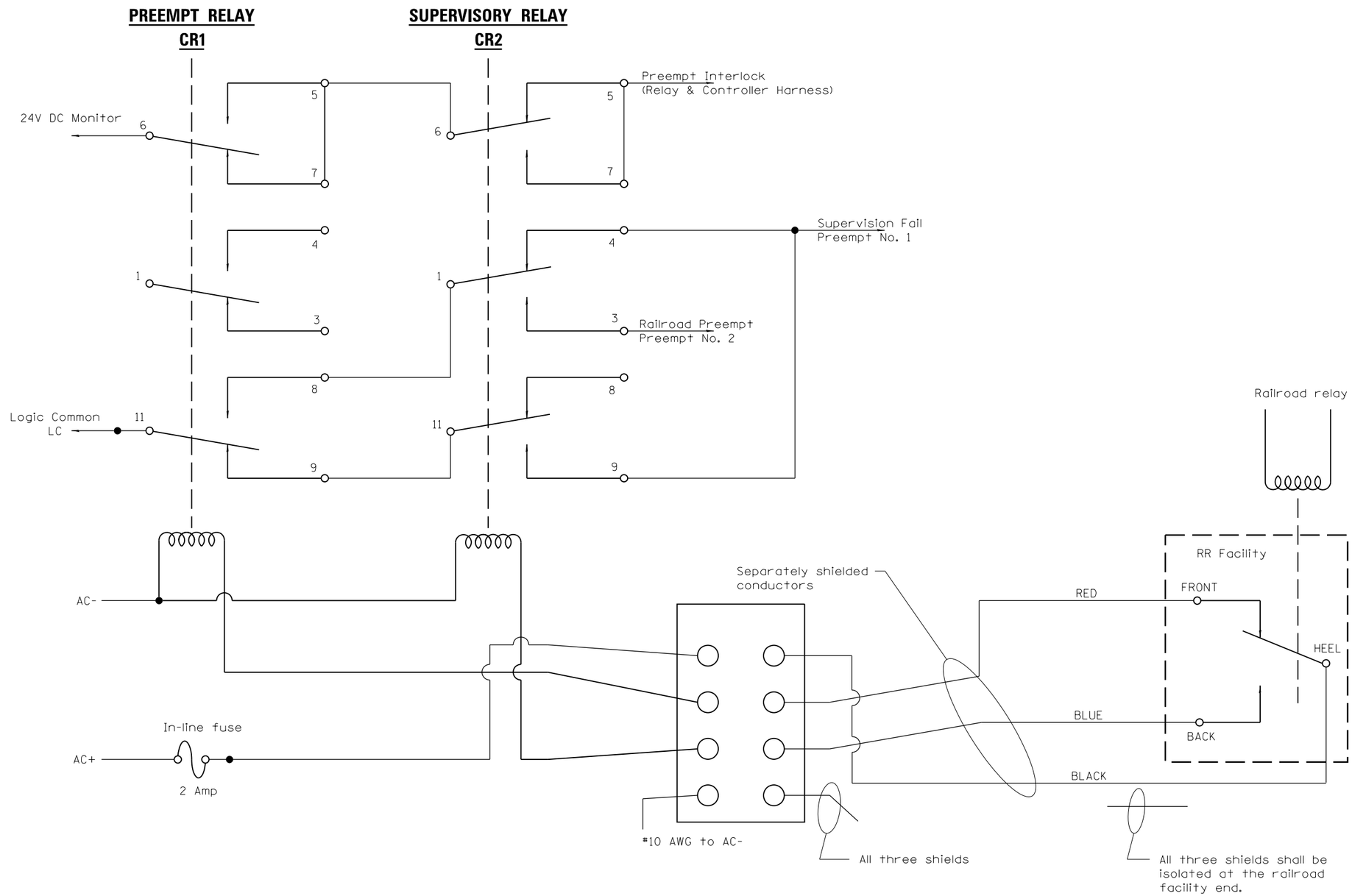


## RELAYS IN NON-PREEMPT STATE – RAILROAD AND PREEMPT RELAYS ENERGIZED

## GENERAL NOTES

CR1 and CR2 are 120VAC 3PDT Relays.

Supervision Fail is Preempt No. 1, causing traffic signal controller to implement all-red flash following track clearance phase.

Railroad Preempt is Preempt No. 2, causing traffic signal controller to implement railroad preemption routine following 1 second delay.

Preempt No. 1 and Preempt No. 2 shall have priority over all other preempts. The railroad preemption routine shall abbreviate each and all active pedestrian phases by immediately entering into flashing DON'T WALK and timing concurrently with the associated vehicle yellow change interval.

Illinois Department of Transportation

APPROVED January 1, 2009
ENGINEER OF OPERATIONS

APPROVED January 1, 2009
ENGINEER OF DESIGN AND ENVIRONMENT

ISSUED 1-1-04

| DATE | REVISIONS |
|---|---|
| 1-1-09 | Omitted note regarding |
| | units of length. |
| | |
| 1-1-04 | New Standard. |
| | |
| | |

# SUPERVISED RAILROAD INTERCONNECT CIRCUIT

STANDARD 857006-01