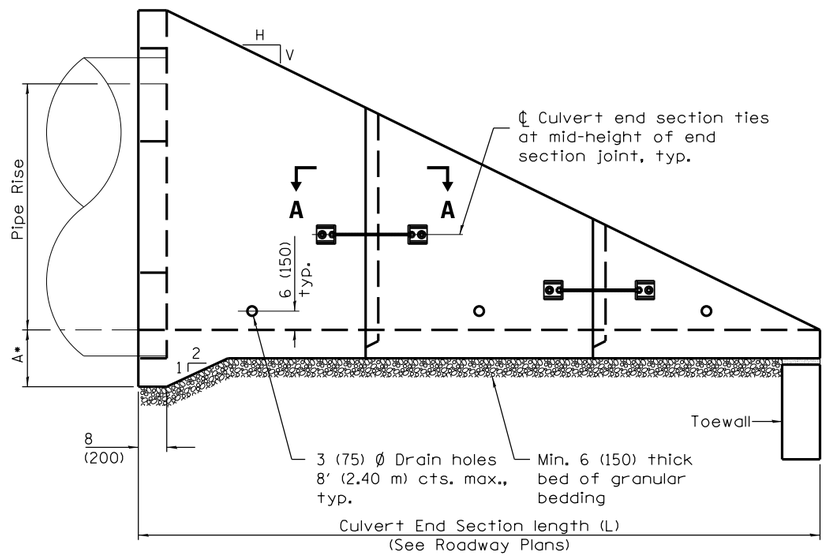


## ELEVATION

• This dimension shall be increased by 1½ (38) for CIP field construction.

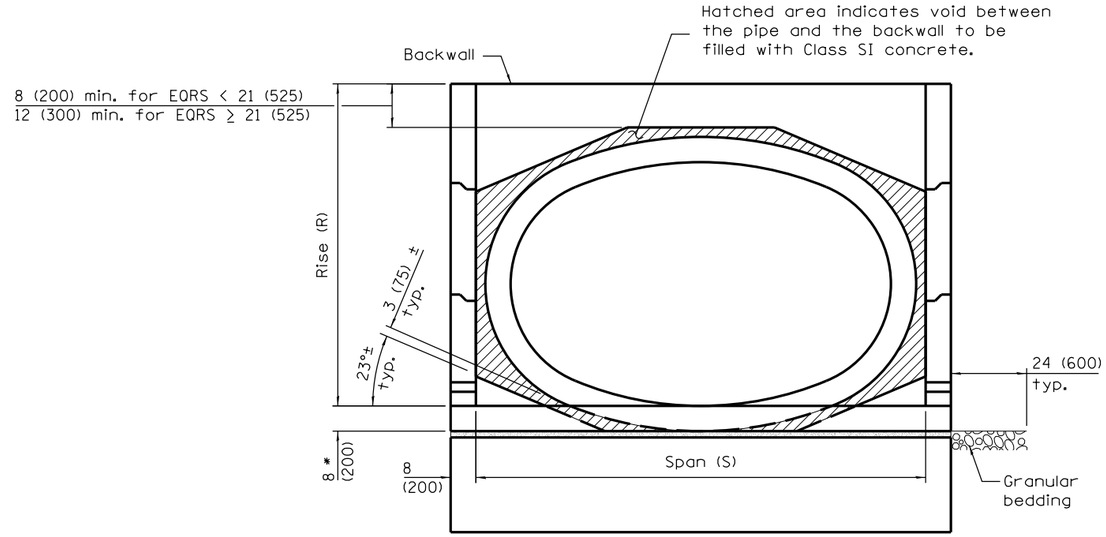


## END VIEW

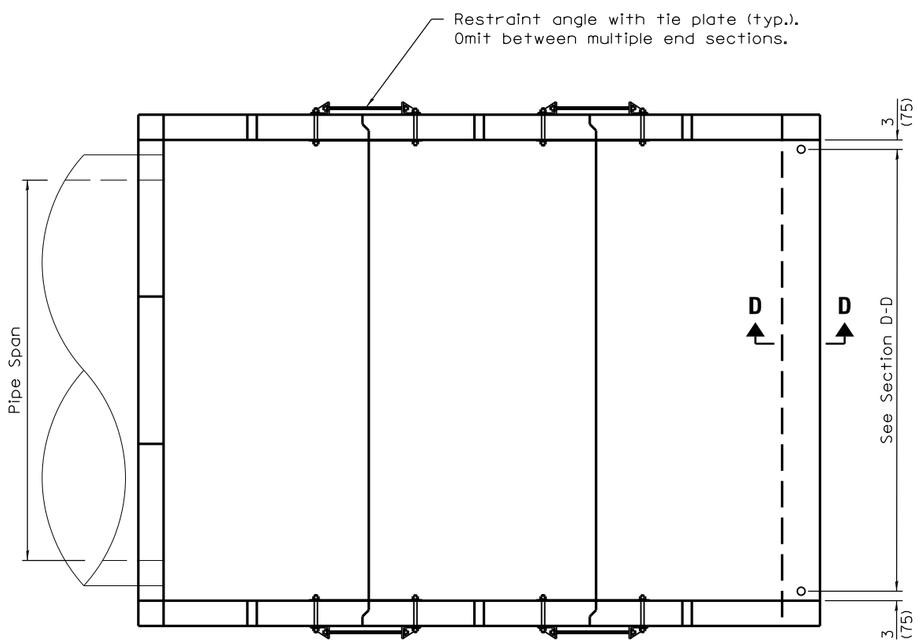


## PLAN

## PIPE CULVERT END SECTION DIMENSIONS

| Equivalent Round Size Pipe I.D. | Pipe Span | Pipe Rise | A | R | S | L | | | |
|---|---|---|---|---|---|---|---|---|---|
| | | | | | | Slope of End Section | | | |
| | | | | | | 1:2 | 1:3 | 1:4 | 1:6 |
| 15 (375) | 23 (575) | 14 (350) | 15 (375) | 28 (711) | 36 (914) | 5′-4″ (1.62 m) | 7′-8″ (2.34 m) | 10′-0″ (3.05 m) | 14′-8″ (4.47 m) |
| 18 (450) | 23 (575) | 14 (350) | 15 (375) | 28 (711) | 36 (914) | 5′-4″ (1.62 m) | 7′-8″ (2.34 m) | 10′-0″ (3.05 m) | 14′-8″ (4.47 m) |
| 21 (525) | 30 (750) | 19 (475) | 15 (375) | 38 (365) | 3′-8″ (1.12 m) | 7′-0″ (2.14 m) | 10′-2″ (3.10 m) | 13′-4″ (4.07 m) | 19′-8″ (6.00 m) |
| 24 (600) | 30 (750) | 19 (475) | 15 (375) | 38 (965) | 3′-8″ (1.12 m) | 7′-0″ (2.14 m) | 10′-2″ (3.10 m) | 13′-4″ (4.07 m) | 19′-8″ (6.00 m) |
| 27 (675) | 34 (850) | 22 (550) | 15 (375) | 3′-5″ (1.04 m) | 4′-0″ (1.22 m) | 7′-6″ (2.29 m) | 10′-11″ (3.33 m) | 14′-4″ (4.38 m) | 21′-2″ (6.46 m) |
| 30 (750) | 38 (950) | 24 (600) | 15 (375) | 3′-7″ (1.09 m) | 4′-4″ (1.32 m) | 7′-10″ (2.39 m) | 11′-5″ (3.48 m) | 15′-0″ (4.57 m) | 22′-2″ (6.75 m) |
| 36 (900) | 45 (1125) | 29 (725) | 16 (400) | 4′-1″ (1.24 m) | 5′-0″ (1.52 m) | 8′-10″ (2.69 m) | 12′-11″ (3.94 m) | 17′-0″ (5.18 m) | 25′-2″ (7.67 m) |
| 42 (1050) | 53 (1325) | 34 (850) | 16 (400) | 4′-6″ (1.37 m) | 5′-10″ (1.78 m) | 9′-8″ (2.95 m) | 14′-2″ (4.32 m) | 18′-8″ (5.69 m) | 27′-8″ (8.44 m) |
| 48 (1200) | 60 (1500) | 38 (950) | 17 (425) | 4′-11″ (1.50 m) | 6′-6″ (1.98 m) | 10′-6″ (3.20 m) | 15′-5″ (4.71 m) | 20′-4″ (6.21 m) | 30′-2″ (9.21 m) |
| 54 (1350) | 68 (1700) | 43 (1075) | 17 (425) | 5′-4″ (1.63 m) | 7′-2″ (2.18 m) | 11′-4″ (3.45 m) | 16′-8″ (5.08 m) | 22′-0″ (6.71 m) | 32′-8″ (9.96 m) |
| 60 (1500) | 76 (1900) | 48 (1200) | 18 (450) | 5′-10″ (1.78 m) | 8′-0″ (2.44 m) | 12′-4″ (3.76 m) | 18′-2″ (5.54 m) | 24′-0″ (7.32 m) | 35′-8″ (10.87 m) |
| 66 (1650) | 83 (2075) | 53 (1325) | 18 (450) | 6′-3″ (1.91 m) | 8′-8″ (2.64 m) | 13′-2″ (4.02 m) | 19′-5″ (5.92 m) | 25′-8″ (7.83 m) | 38′-2″ (11.64 m) |
| 72 (1800) | 91 (2275) | 58 (1450) | 19 (475) | 6′-9″ (2.06 m) | 9′-4″ (2.84 m) | 14′-2″ (4.32 m) | 20′-11″ (6.38 m) | 27′-8″ (8.44 m) | 41′-2″ (12.56 m) |

See Sheet 3 for GENERAL NOTES.

Illinois Department of Transportation

APPROVED April 1, 2016
ENGINEER OF BRIDGES AND STRUCTURES

APPROVED April 1, 2016
ENGINEER OF DESIGN AND ENVIRONMENT

ISSUED 1-1-13

| DATE | REVISIONS |
|---|---|
| 4-1-16 | Added note to omit |
| | restraint angle and tie |
| | plate for mult. end sections. |
| 1-1-13 | New standard. |

# CONCRETE END SECTIONS FOR ELLIPTICAL PIPE CULVERTS 15″ (375 mm) THRU 72″ (1800 mm) EQUIVALENT DIAMETER

(Sheet 1 of 3)

**STANDARD 542011–01**

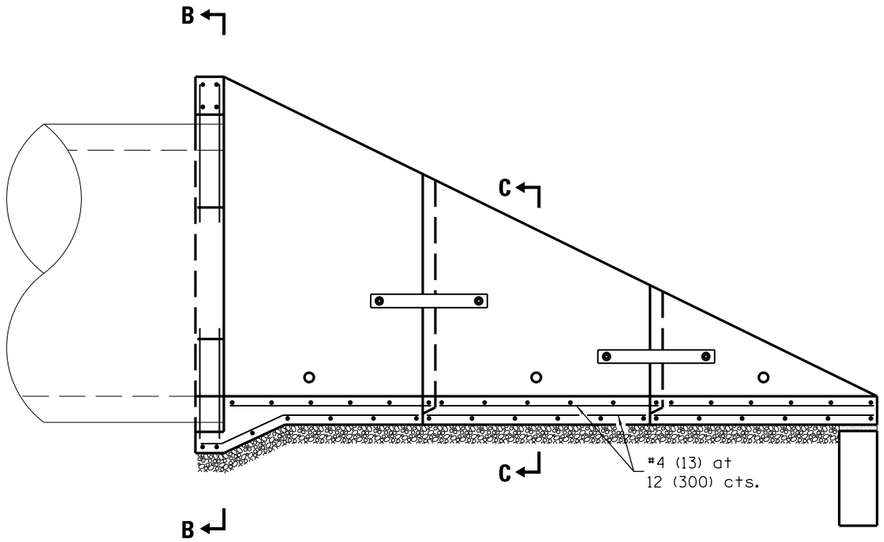


## LONGITUDINAL SECTION

(Showing bottom slab and backwall reinforcement.)

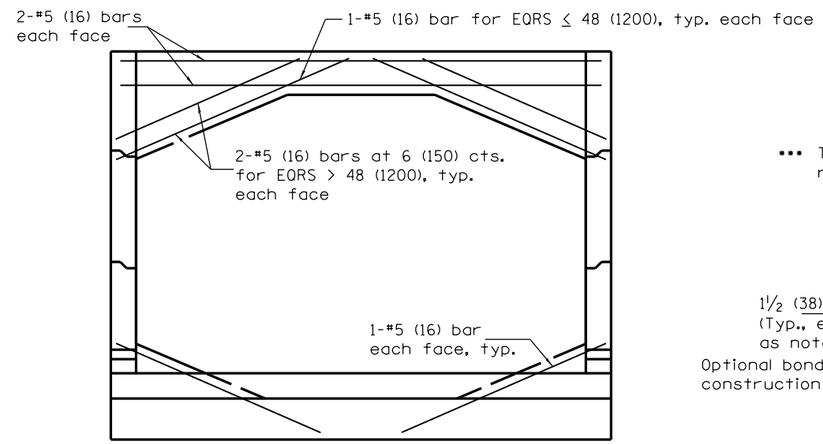


## SECTION B–B

(Showing backwall reinforcement only.)
(Pipe omitted for clarity.)

## LAP DIMENSION

#4 (13) bar = 17 (425)
#5 (16) bar = 21 (525)
#6 (19) bar = 25 (625)

••• The Contractor may use lap splices for the sidewall reinforcement at the locations shown.

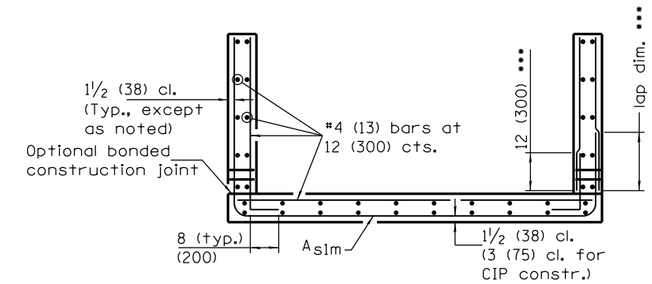


## SECTION C–C

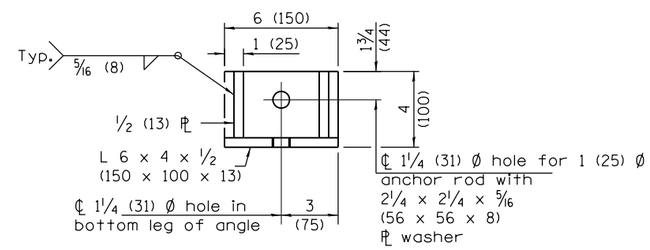


## RESTRAINT ANGLE DETAIL

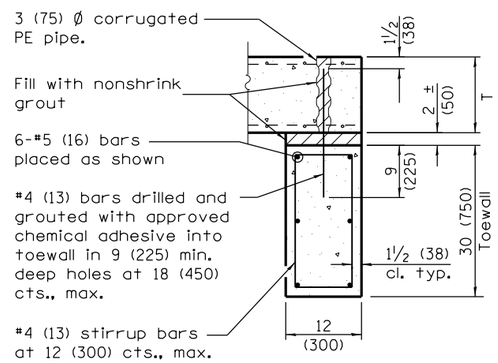


## SECTION D–D

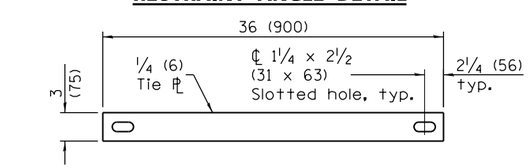


## TIE PLATE DETAIL

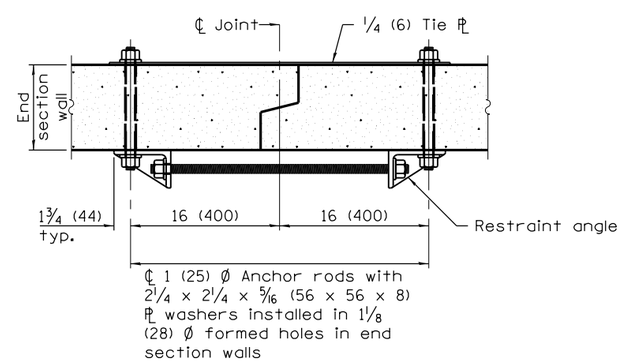


## SECTION A–A

(Showing end section tie details)

## REINFORCEMENT SCHEDULE

| Equivalent Round Size Pipe I.D. | $A_{slm}$ | |
|---|---|---|
| | Bar Size | Bar Spacing |
| 15 (375) | 4 (13) | 12 (300) |
| 18 (450) | 4 (13) | 12 (300) |
| 21 (525) | 4 (13) | 12 (300) |
| 24 (600) | 4 (13) | 12 (300) |
| 27 (700) | 4 (13) | 12 (300) |
| 30 (750) | 4 (13) | 12 (300) |
| 36 (900) | 4 (13) | 12 (300) |
| 42 (1050) | 4 (13) | 12 (300) |
| 48 (1200) | 4 (13) | 8 (200) |
| 54 (1350) | 4 (13) | 8 (200) |
| 60 (1500) | 4 (13) | 8 (200) |
| 66 (1650) | 5 (16) | 8 (200) |
| 72 (1800) | 5 (16) | 8 (200) |

Illinois Department of Transportation

APPROVED April 1, 2016
ENGINEER OF BRIDGES AND STRUCTURES
APPROVED April 1, 2016
ENGINEER OF DESIGN AND ENVIRONMENT

ISSUED 1-1-13

**CONCRETE END SECTIONS FOR ELLIPTICAL PIPE CULVERTS 15" (375 mm) THRU 72" (1800 mm) EQUIVALENT DIAMETER**

(Sheet 2 of 3)

**STANDARD 542011–01**

## QUANTITIES

| Equivalent Round Size Pipe I.D. | Concrete yd³ (m³) ① | | | | Reinforcement Without Lap lbs. (kg) | | | | Reinforcement With Lap lbs (kg) | | | |
|---|---|---|---|---|---|---|---|---|---|---|---|---|
| | Slope of End Section | | | | Slope of End Section | | | | Slope of End Section | | | |
| | 1:2 | 1:3 | 1:4 | 1:6 | 1:2 | 1:3 | 1:4 | 1:6 | 1:2 | 1:3 | 1:4 | 1:6 |
| 15 (375) | 1.5 (1.1) | 1.9 (1.6) | 2.3 (1.8) | 3.0 (2.3) | 220 (120.8) | 270 (148.3) | 320 (172.9) | 420 (228.5) | 240 (132.3) | 300 (164.3) | 350 (192.8) | 470 (257.4) |
| 18 (450) | 1.5 (1.3) | 1.9 (1.6) | 2.3 (1.8) | 3.0 (2.3) | 220 (120.8) | 270 (148.3) | 320 (172.9) | 420 (228.5) | 240 (132.3) | 300 (164.3) | 350 (192.8) | 470 (257.4) |
| 21 (525) | 2.2 (1.7) | 2.8 (2.1) | 3.5 (2.7) | 4.8 (3.7) | 310 (167.2) | 390 (172.9) | 470 (211.5) | 630 (285.2) | 330 (181.8) | 420 (189.3) | 520 (232.9) | 700 (316.3) |
| 24 (600) | 2.2 (1.7) | 2.8 (2.1) | 3.5 (2.7) | 4.8 (3.7) | 310 (167.2) | 390 (172.9) | 470 (211.5) | 630 (285.2) | 330 (181.8) | 420 (189.3) | 520 (232.9) | 700 (316.3) |
| 27 (700) | 2.5 (1.9) | 3.2 (2.4) | 3.9 (3.0) | 5.4 (4.1) | 330 (181.7) | 420 (190.1) | 510 (231.4) | 690 (310.5) | 360 (197.0) | 460 (208.0) | 560 (254.3) | 760 (343.1) |
| 30 (750) | 2.7 (2.1) | 3.5 (2.7) | 4.3 (3.3) | 5.9 (4.5) | 350 (193.1) | 450 (201.9) | 540 (244.9) | 730 (331.3) | 380 (209.5) | 490 (220.4) | 600 (268.7) | 810 (365.3) |
| 36 (900) | 3.3 (2.5) | 4.4 (3.4) | 5.4 (4.1) | 7.5 (5.7) | 430 (237.6) | 560 (252.2) | 690 (309.3) | 940 (423.4) | 470 (255.8) | 610 (273.0) | 740 (335.9) | 1020 (461.8) |
| 42 (1050) | 4.0 (3.1) | 5.3 (4.1) | 6.6 (5.0) | 9.2 (7.0) | 510 (279.8) | 660 (295.6) | 820 (369.1) | 1120 (508.5) | 550 (299.8) | 700 (317.9) | 880 (398.7) | 1220 (551.3) |
| 48 (1200) | 4.7 (3.6) | 6.2 (4.7) | 7.8 (6.0) | 10.9 (8.3) | 660 (362.5) | 870 (391.5) | 1070 (485.4) | 1490 (672.8) | 710 (389.5) | 940 (422.8) | 1160 (525.7) | 1610 (731.4) |
| 54 (1350) | 5.3 (4.1) | 7.2 (5.5) | 9.0 (6.9) | 12.6 (9.6) | 730 (400.1) | 960 (434.4) | 1190 (540.2) | 1670 (756.6) | 780 (428.9) | 1030 (467.9) | 1290 (583.7) | 1810 (820.5) |
| 60 (1500) | 6.3 (4.8) | 8.5 (6.5) | 10.7 (8.2) | 15.1 (11.5) | 830 (458.1) | 1110 (500.0) | 1390 (629.0) | 1950 (882.2) | 890 (488.7) | 1180 (535.9) | 1490 (676.2) | 2100 (951.4) |
| 66 (1650) | 7.1 (5.4) | 9.6 (7.3) | 12.2 (9.3) | 17.2 (13.2) | 1080 (596.0) | 1470 (665.5) | 1840 (836.2) | 2610 (1185.3) | 1180 (650.1) | 1610 (729.0) | 2030 (918.3) | 2880 (1306.3) |
| 72 (1800) | 8.2 (6.3) | 11.1 (8.5) | 14.0 (10.7) | 19.8 (14.9) | 1190 (653.9) | 1620 (734.2) | 2050 (931.6) | 2930 (1328.9) | 1290 (710.7) | 1770 (801.7) | 2250 (1019.9) | 3220 (1460.0) |

① For cast-in-place construction, increase concrete volumes by approximately 13%.

## GENERAL NOTES

The number of segments shown in elevation is for example only. The length and number of precast sections required to construct the end section shall be determined by the Contractor.

See roadway plans for slope (V:H) and pipe inside diameter.

End section may be installed up to ± 15 degrees skewed with roadway.

2¼ x 2¼ x 5/16 (56 x 56 x 8) plate washers shall be provided under each nut required for the anchor rods. Holes in the walls for the culvert tie assembly may be drilled using core bits in lieu of formed holes.

See Standard 542311 for end sections having traversable pipe grate.

All slope ratios are expressed as units of verical dispacement to units of horizontal displacement (V:H).

All dimensions are in inches (millimeters) unless otherwise shown.

Illinois Department of Transportation

APPROVED April 1, 2016
ENGINEER OF BRIDGES AND STRUCTURES

APPROVED April 1, 2016
ENGINEER OF DESIGN AND ENVIRONMENT

ISSUED 1-1-13

**CONCRETE END SECTIONS FOR ELLIPTICAL PIPE CULVERTS 15" (375 mm) THRU 72" (1800 mm) EQUIVALENT DIAMETER**

(Sheet 3 of 3)

**STANDARD 542011-01**