TENON TOP FOR VERTICAL MOUNTED LUMINAIRES

Note: The tenon top shall support a bullhorn fitting with two (twin) vertically mounted luminaires (clamp-mounted bullhorn assembly with removable pole cap acceptable). Each luminaire shall weigh 100 lb (45 kg) and have an effective projected (EPA) area of 3.85 sq. ft. (0.36 sq. m).

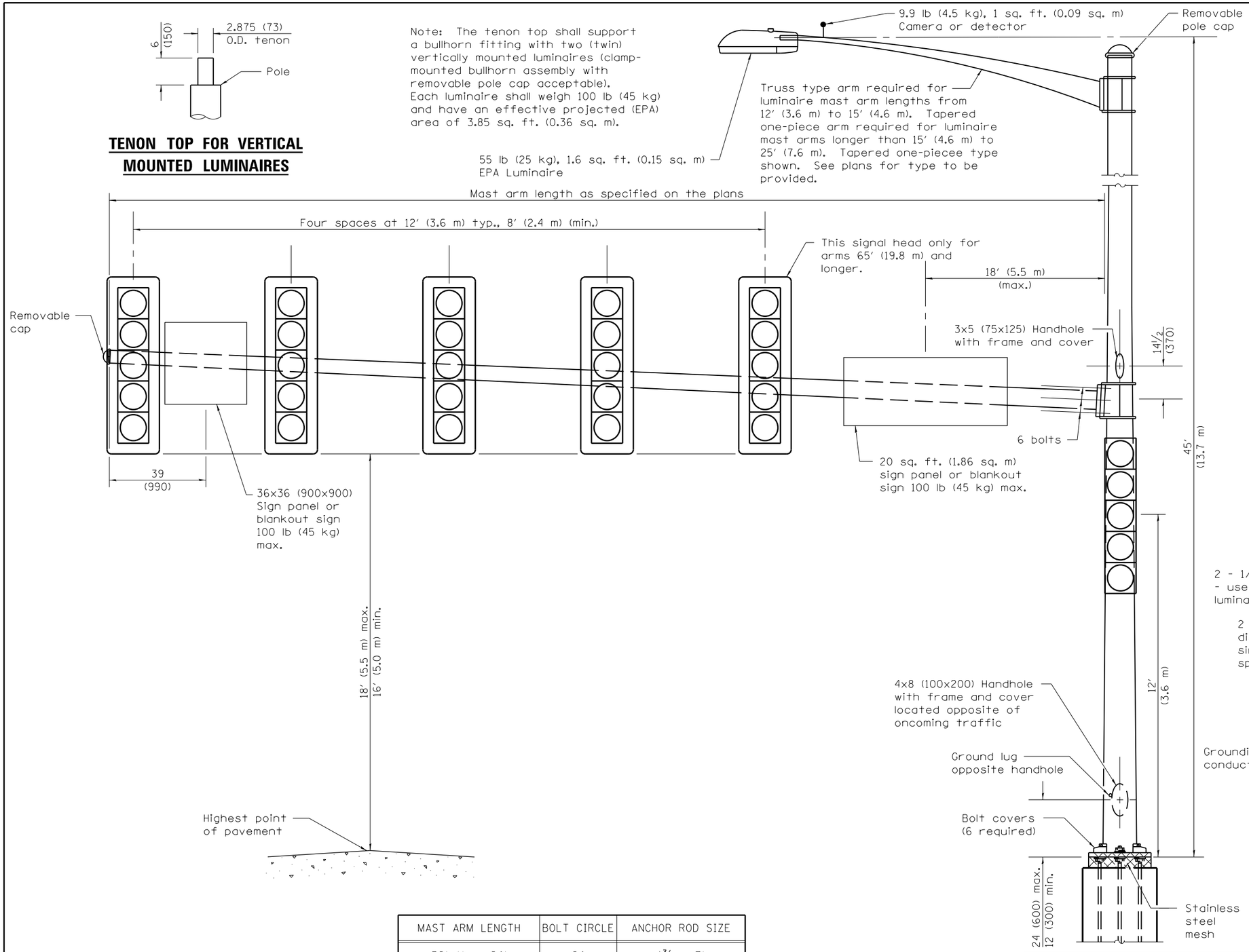

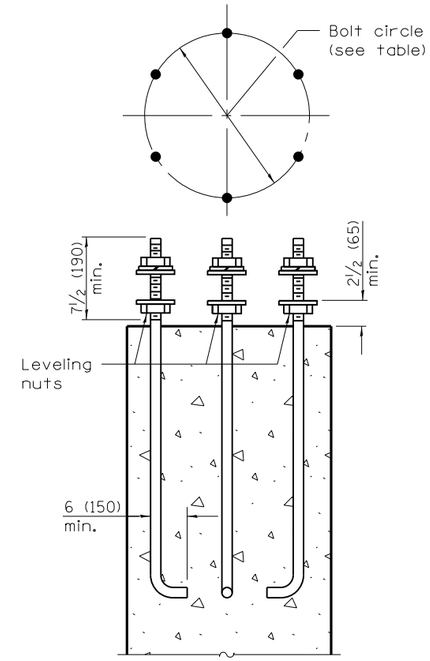

ANCHOR ROD DETAIL

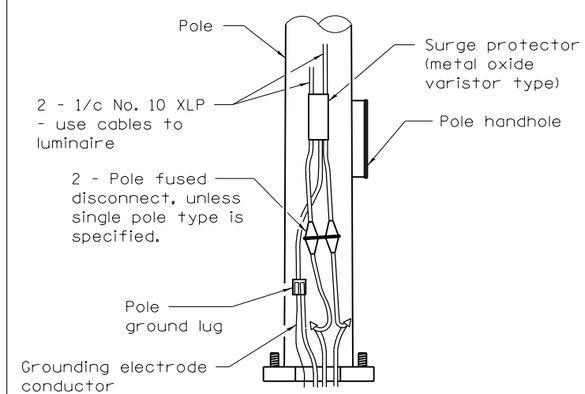

POLE BASE DETAIL

MAST ARM LENGTH	BOLT CIRCLE	ANCHOR ROD SIZE
56′ thru 64′ (17.1 m thru 19.8 m)	24 (610)	1¾ x 7′ (44 x 2.10 m)
65′ thru 75′ (20.1 thru 22.9 m)	27 (686)	2 x 7′-6″ (51 x 2.30 m)

GENERAL NOTES

Signal heads, sign panels, and other attachments are shown for minimum design loading purposes only. Each signal head shall weigh 80 lb (36 kg) and have a projected area of 14.7 sq. ft. (1.37 sq. m).

All dimensions are in inches (millimeters) unless otherwise shown.

Illinois Department of Transportation

APPROVED April 1, 2016
ENGINEER OF OPERATIONS

APPROVED April 1, 2016
ENGINEER OF DESIGN AND ENVIRONMENT

ISSUED 1-1-08

DATE	REVISIONS
4-1-16	Modified luminaire arm note.
	Changed sign panel to 36x36
	and 100 lb. max.
1-1-12	Changed 2.5′x8′ sign panel
	to 20 sq. ft. (1.86 sq. m)
	max.

STEEL COMB. MAST ARM ASSEMBLY AND POLE 56′ THROUGH 75′

STANDARD 877012–03