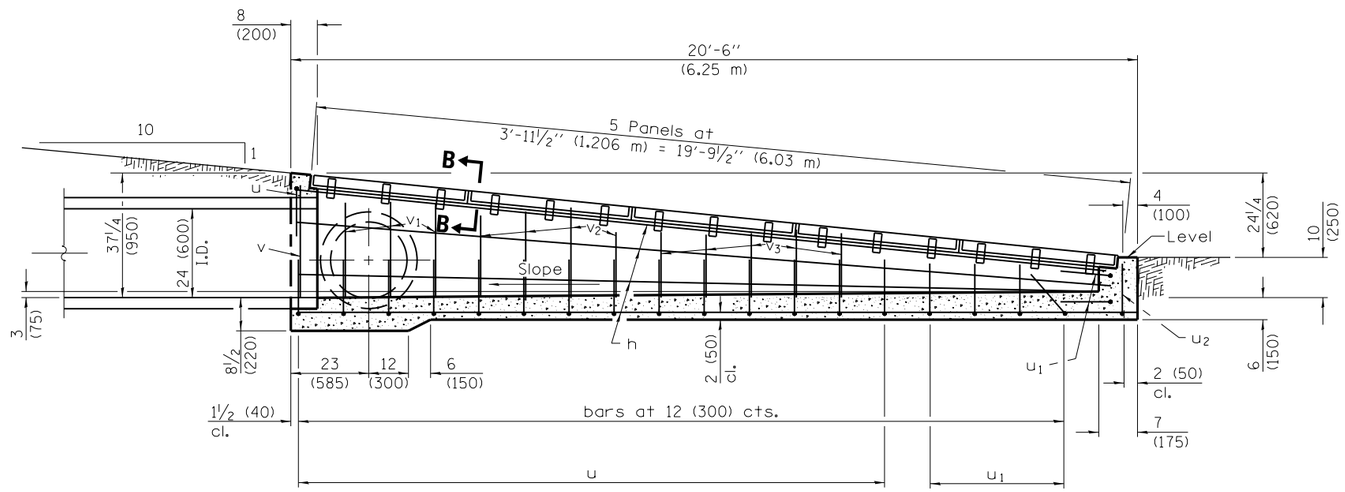

SECTION A–A

NOTE:
Culvert pipe may exit from the side (or sides) by changing reinforcement bars in that area and in the headwall end of box.

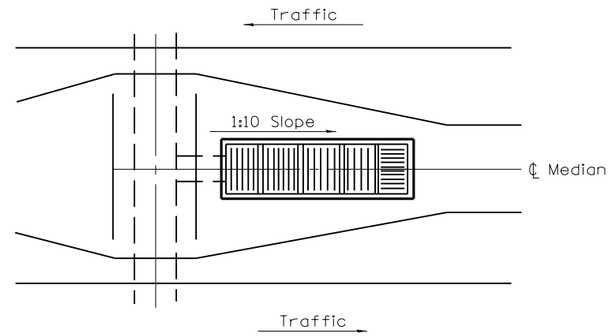

Sketch showing location and direction of main bearing bars in relation to ℄ median (showing exit from end)

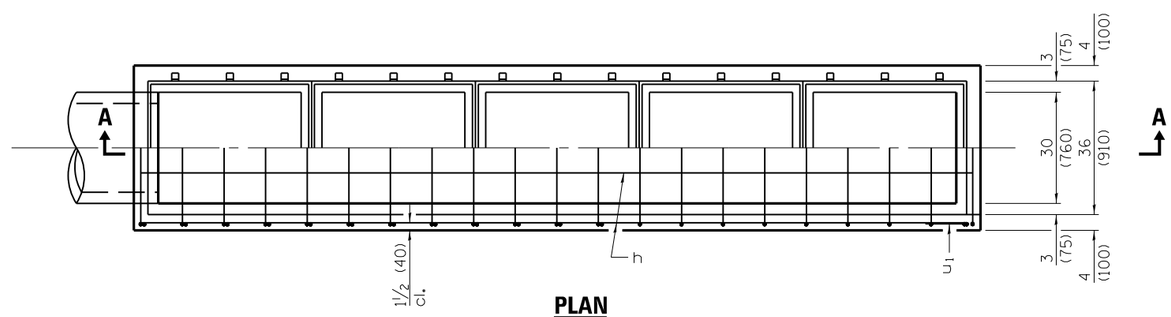

PLAN

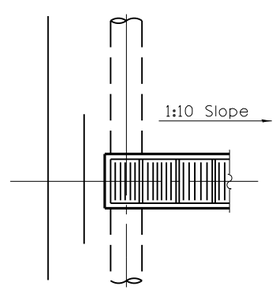

Detail showing exit from side (or sides)

GENERAL NOTES

If field conditions will permit, bottom of inlet box shall have 2 (50) slope.

All slope ratios are expressed as units of vertical displacement to units of horizontal displacement (V:H).

All dimensions are in inches (millimeters) unless otherwise shown.

Illinois Department of Transportation

PASSED January 1, 2011
Michael Brand
ENGINEER OF POLICY AND PROCEDURES
APPROVED January 1, 2011
Scott E. Stokes
ENGINEER OF DESIGN AND ENVIRONMENT

ISSUED 1-1-97

DATE	REVISIONS
1-1-11	Added 36 (910) dimension
	to plan view. Corrected
	weld symbols on Sheet 2.
1-1-09	Switched units to
	English (metric). Revised
	General Notes.

INLET BOX
TYPE 24 (600) G

(Sheet 1 of 2)

STANDARD 542531–04

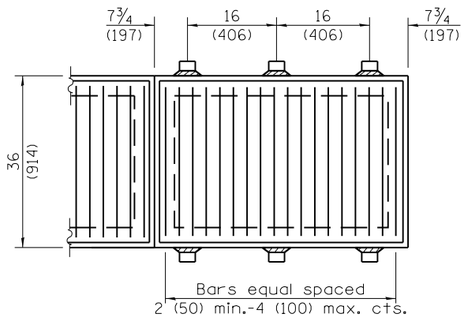

TYPICAL STEEL GRATING

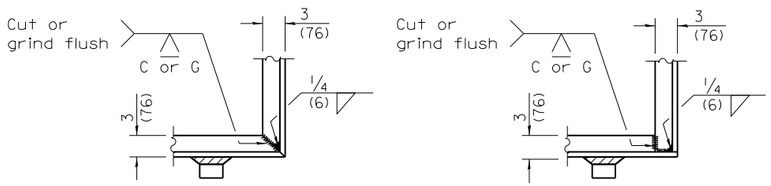

TYPICAL CORNER OF STEEL GRATING FRAME

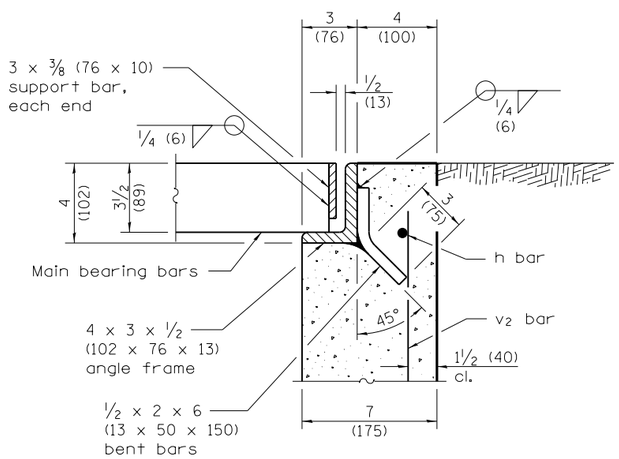

SECTION B–B

Material Required for One Inlet Box

Bar	No.	Size	Length
h	10	No. 4 (No. 13)	20′-0″ (6.10 m)
u	17	No. 4 (No. 13)	6′-5″ (1.96 m)
u_1	6	No. 4 (No. 13)	5′-11″ (1.80 m)
u_2	1	No. 4 (No. 13)	5′-6″ (1.68 m)
v	2	No. 4 (No. 13)	33 (840)
v_1	6	No. 4 (No. 13)	30 (760)
v_2	10	No. 4 (No. 13)	24 (610)
v_3	10	No. 4 (No. 13)	18 (460)
Concrete		cu. yds. (m^3)	3.2 (2.45)
Reinf. Bars		lbs. (kg)	270 (122)
Grating		(sq. ft.) (m^2)	56.0 (5.20)

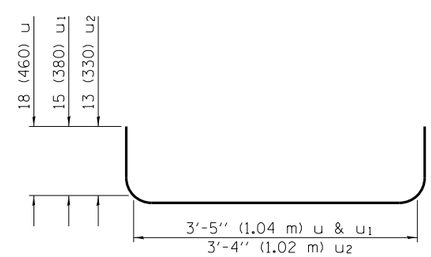

BARS u, u1 & u2

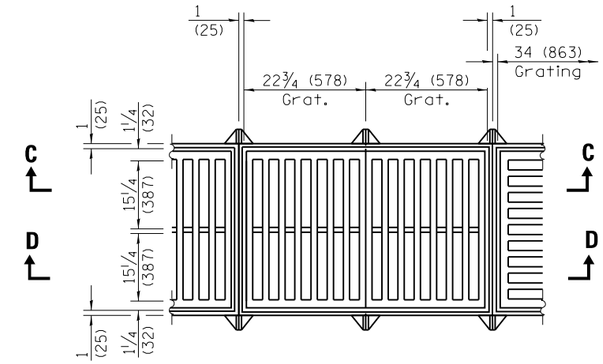

TYPICAL CAST GRATING

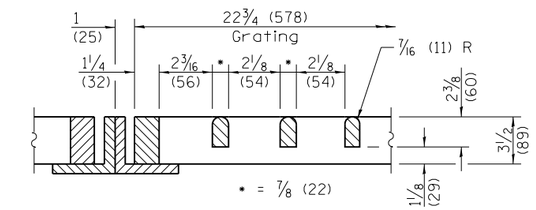

DETAIL B

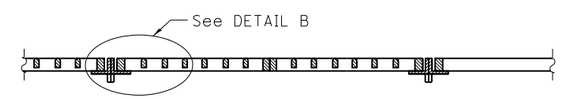

SECTION C–C

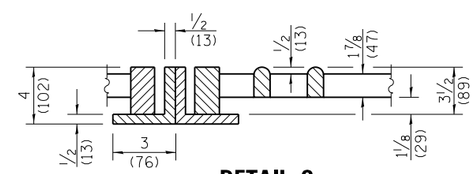

DETAIL C

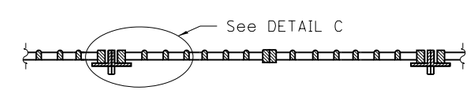

SECTION D–D

Illinois Department of Transportation

PASSED January 1, 2011

Michael Brand
ENGINEER OF POLICY AND PROCEDURES

APPROVED January 1, 2011

ENGINEER OF DESIGN AND ENVIRONMENT

ISSUED 1-1-97

INLET BOX
TYPE 24 (600) G

(Sheet 2 of 2)

STANDARD 542531–04