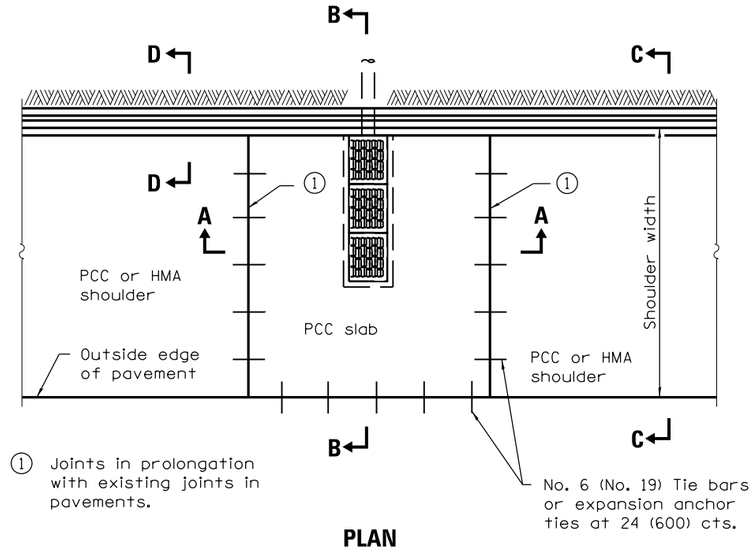

PLAN

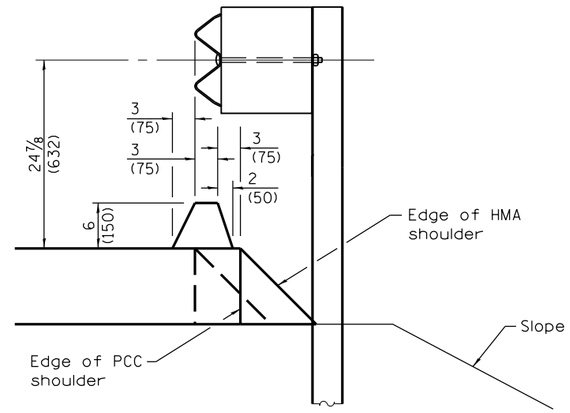

DETAIL B

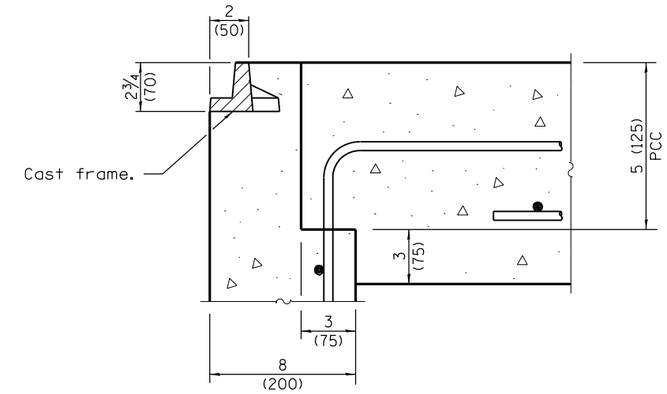

DETAIL A

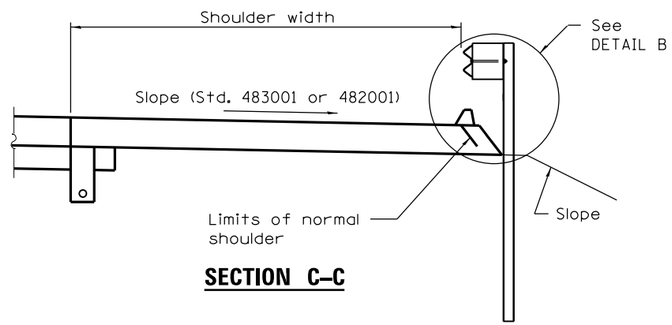

SECTION C–C

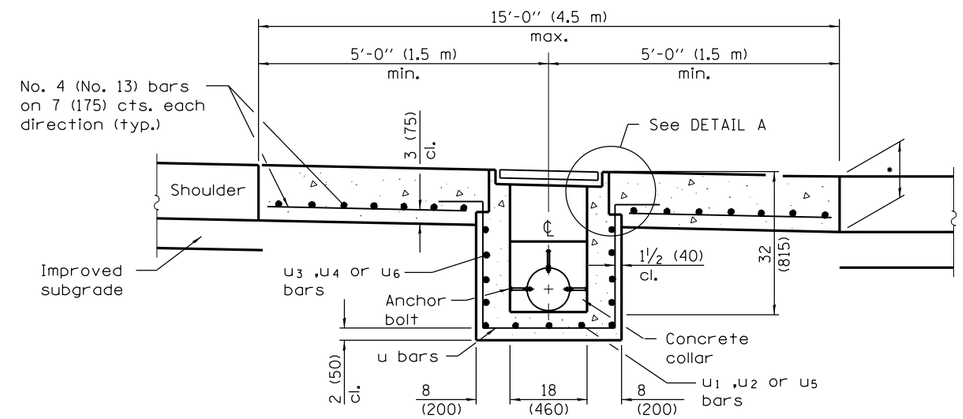

SEC. A–A

- PCC slab thickness same as adjacent shoulder.

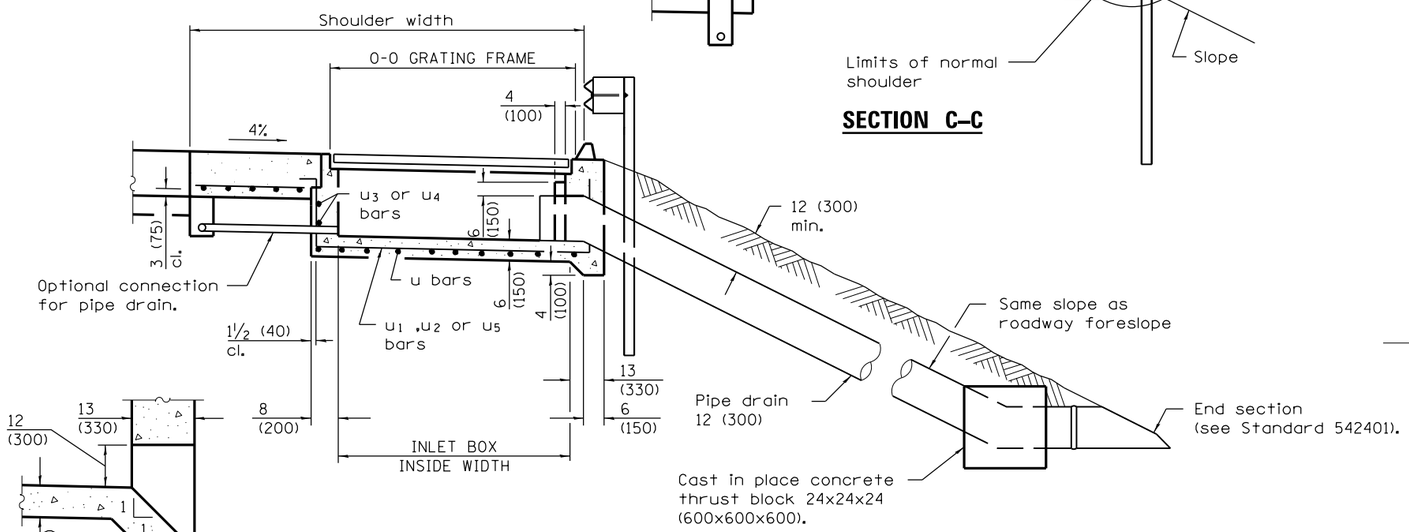

SEC. B–B

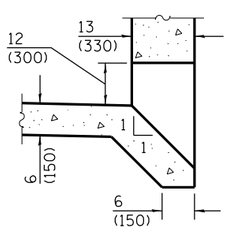

BOX OUTLET WHEN PRECAST

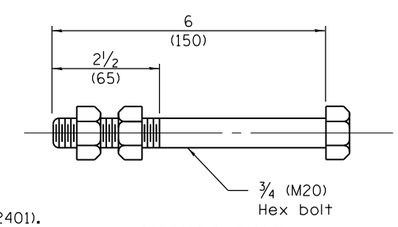

ANCHOR BOLT

(Used to tie pipe to concrete collar)

INLET TYPE	SHOULDER WIDTH	O-O GRATING FRAME	INLET BOX INSIDE WIDTH	INLET BOX INSIDE LENGTH
Type E	8′ (2.4 m)	4′-4″ (1.325 m)	3′-11″ (1.195 m)	18 (460)
Type F	10′ (3.0 m)	6′-5″ (1.960 m)	6′-0″ (1.830 m)	18 (460)
Type G	5′ (1.5 m) or less	27 (690)	22 (560)	18 (460)

GENERAL NOTES

See Standard 420001 for joint details not shown.

See Standard 630001 for details of guardrail not shown.

All exposed edges of the inlet, except the upper perimeter, shall be beveled 3/4 (20).

For placement of drainage elements on existing construction with existing rigid pavement, substitute expansion anchor ties for tie bars. For nonrigid pavements or monolithic construction of PCC slab and shoulder, omit tie bars.

All dimensions are in inches (millimeters) unless otherwise shown.

Illinois Department of Transportation

PASSED January 1, 2017
ENGINEER OF POLICY AND PROCEDURES
APPROVED January 1, 2017
ENGINEER OF DESIGN AND ENVIRONMENT

ISSUED 1-1-97

DATE	REVISIONS
1-1-17	Revised to reflect Midwest
	Guardrail System 12 in.
	blockout. Revised gen. notes.
1-1-12	Added Type G inlet type.

SHOULDER INLET WITH CURB

(Sheet 1 of 2)

STANDARD 610001–07

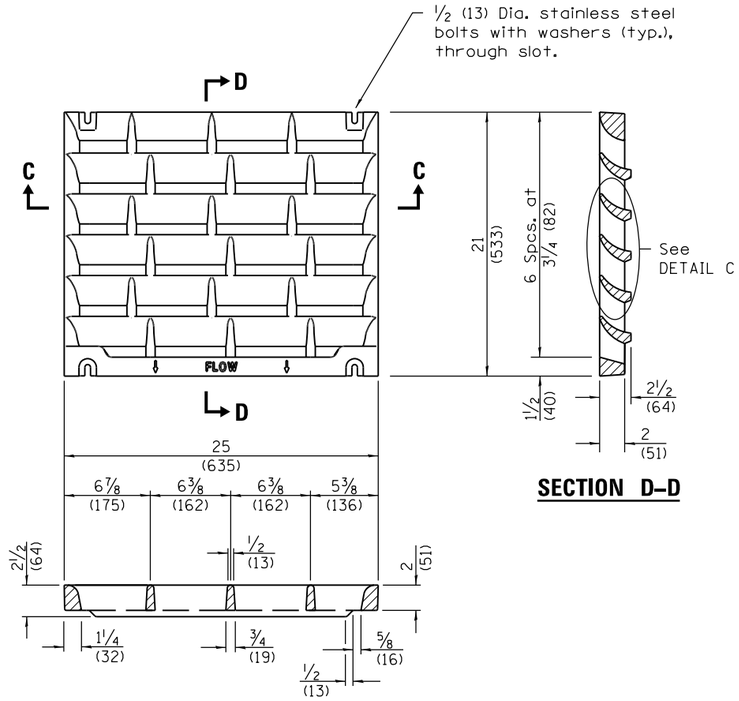

SECTION C–C

SECTION D–D

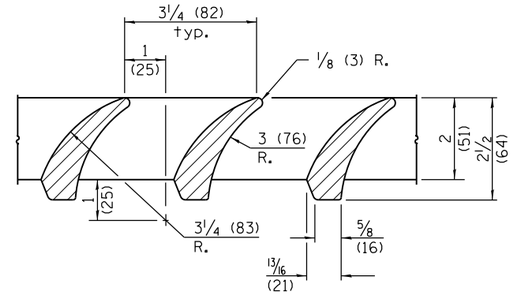

DETAIL C

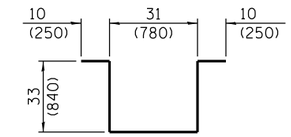

BAR u

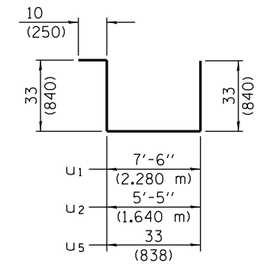

BARS u1 , u2 & u5

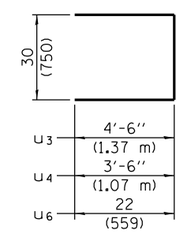

BARS u3 , u4 & u6

INLET BOX

REQUIRED MATERIAL			
TYPE F			
Bar	Qty.	Size	Length
u	8	No. 4 (No.13)	9′-9″ (2.96 m)
u1	3	No. 4 (No.13)	13′-10″ (4.21 m)
u3	6	No. 4 (No.13)	11′-6″ (3.49 m)
Concrete		cu. yds. (m^3)	1.7 (1.3)
Reinf. bars		lbs. (kg)	126 (57.2)
Grating		sq. ft. (m^2)	10.9 (1.02)
TYPE E			
Bar	Qty.	Size	Length
u	6	No. 4 (No.13)	9′-9″ (2.96 m)
u2	3	No. 4 (No.13)	11′-9″ (3.57 m)
u4	6	No. 4 (No.13)	9′-6″ (2.89 m)
Concrete		cu. yds. (m^3)	1.3 (1.0)
Reinf. bars		lbs. (kg)	101 (45.8)
Grating		sq. ft. (m^2)	7.3 (0.68)
TYPE G			
Bar	Qty.	Size	Length
u	4	No. 4 (No.13)	9′-9″ (2.69 m)
u5	3	No. 4 (No.13)	9′-1″ (2.78 m)
u6	4	No. 4 (No.13)	6′-2″ (1.87 m)
Concrete		cu. yds. (m^3)	0.5 (0.4)
Reinf. bars		lbs. (kg)	55 (25.0)
Grating		sq. ft. (m^2)	3.6 (0.34)

DETAIL OF CAST GRATE

Type G requires 1 grate
Type E requires 2 grates
Type F requires 3 grates

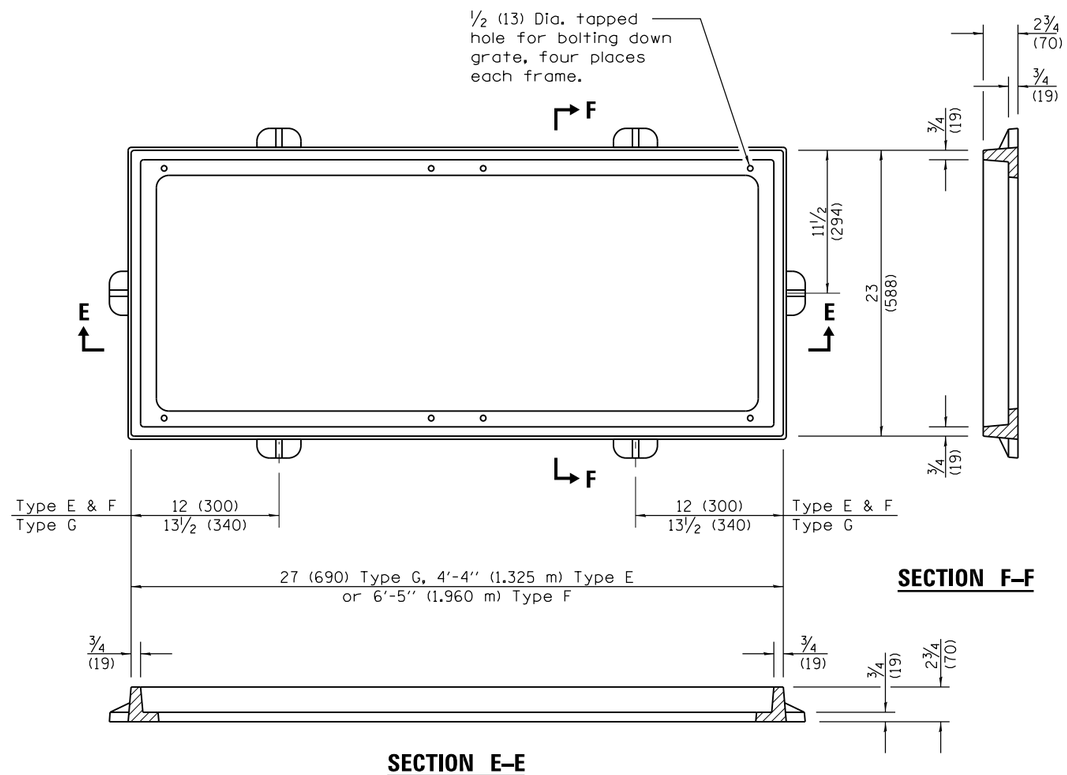

SECTION F–F

SECTION E–E

DETAIL OF CAST FRAME

(Type E shown)

Illinois Department of Transportation

PASSED January 1, 2017
ENGINEER OF POLICY AND PROCEDURES
APPROVED January 1, 2017
ENGINEER OF DESIGN AND ENVIRONMENT

ISSUED 1-1-97

SHOULDER INLET WITH CURB

(Sheet 2 of 2)

STANDARD 610001–07