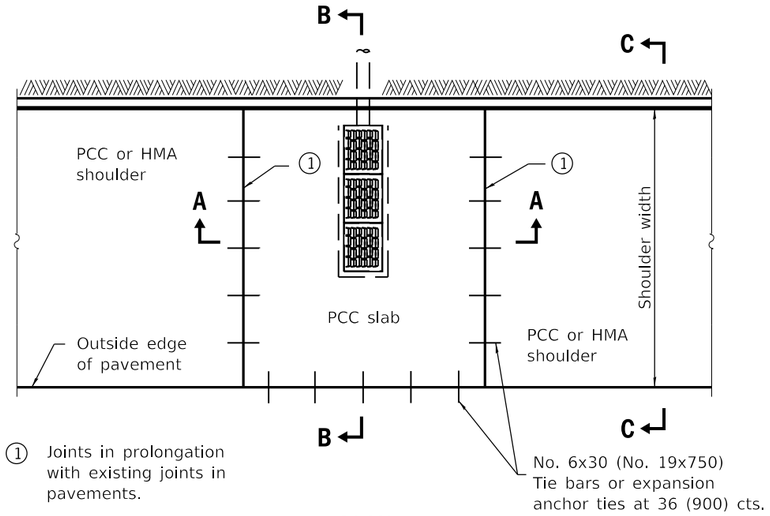

PLAN

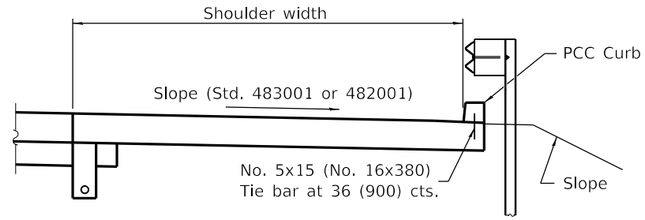

SECTION C-C

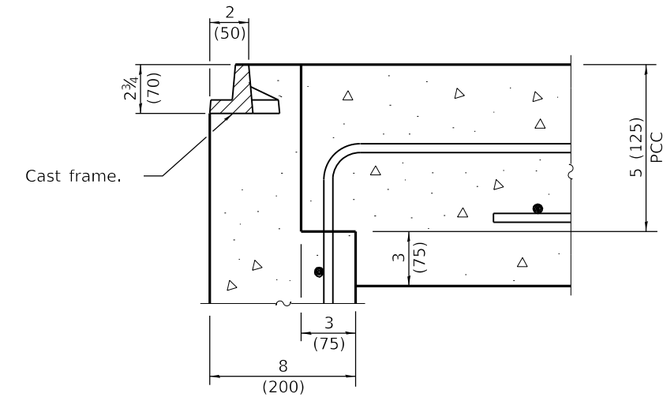

DETAIL A

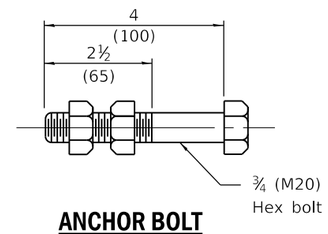

ANCHOR BOLT

(Used to tie pipe to concrete collar)

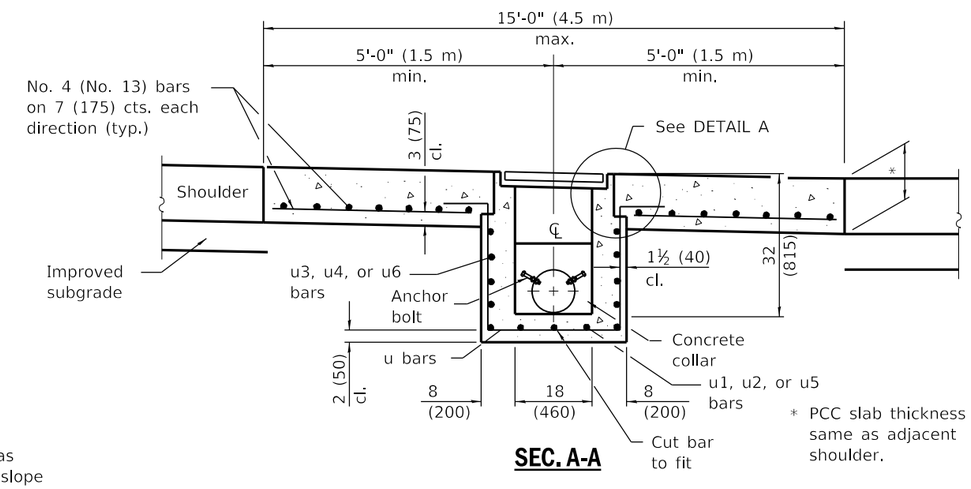

SEC. A-A

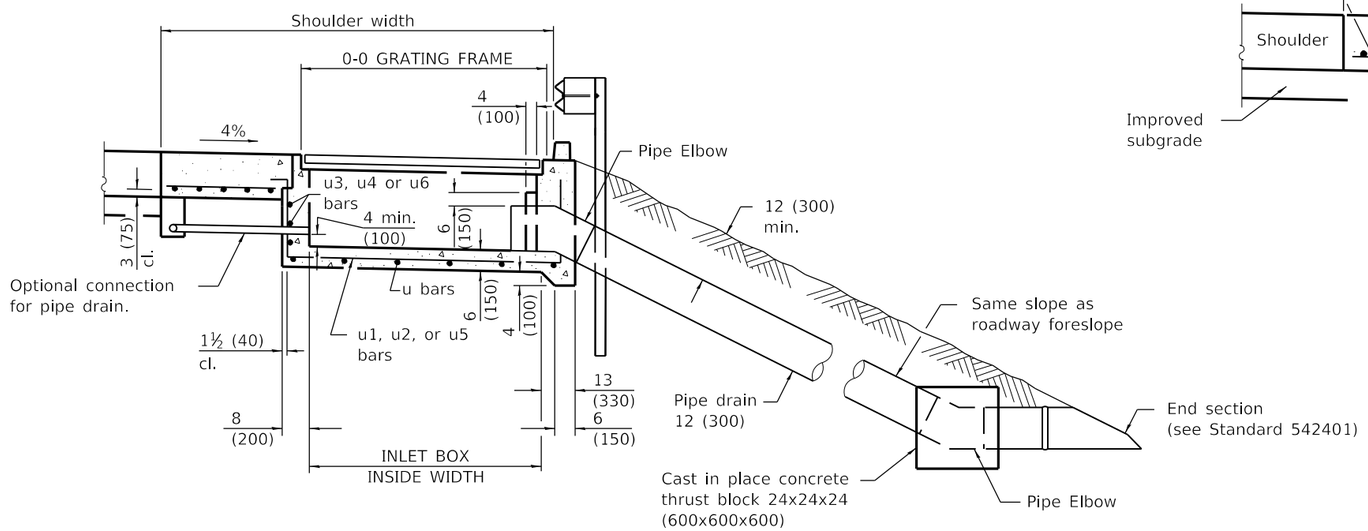

SECTION B-B

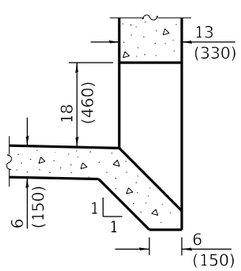

BOX OUTLET WHEN PRECAST

INLET TYPE	SHOULDER WIDTH	O-O GRATING FRAME	INLET BOX INSIDE WIDTH	INLET BOX INSIDE LENGTH
Type E	8' (2.4 m)	4'-4" (1.325 m)	3'-11" (1.195 m)	18 (460)
Type F	10' (3.0 m)	6'-5" (1.960 m)	6'-0" (1.830 m)	18 (460)
Type G	5' (1.5 m) or less	27 (690)	22 (560)	18 (460)

GENERAL NOTES

See Standard 420001 for joint details not shown.

See Standard 630001 for details of guardrail not shown.

All exposed edges of the inlet, except the upper perimeter, shall be beveled ¾ (20).

For placement of drainage elements on existing construction with existing rigid pavement, substitute expansion anchor ties for tie bars. For nonrigid pavements or monolithic construction of PCC slab and shoulder, omit tie bars.

All dimensions are in inches (millimeters) unless otherwise shown.

Illinois Department of Transportation

PASSED January 1, 2021
ENGINEER OF POLICY AND PROCEDURES

APPROVED January 1, 2021
ENGINEER OF DESIGN AND ENVIRONMENT

ISSUED 1-1-97

DATE	REVISIONS
1-1-21	Revised Section B-B, precast
	box outlet, anchor bolts, rebar
	and curb details. Added pipe
	elbows and WWR note.
1-1-18	Changed tie bar spacing to
	36 (900) cts.

SHOULDER INLET WITH CURB

(Sheet 1 of 2)

STANDARD 610001-09

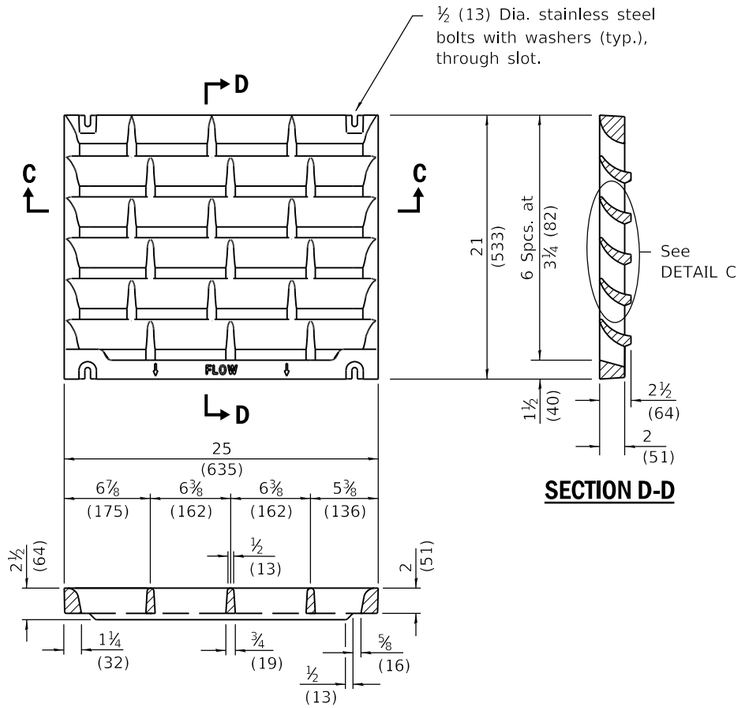

SECTION D-D

SECTION C-C

DETAIL OF CAST GRATE

Type G requires 1 grate
Type E requires 2 grates
Type F requires 3 grates

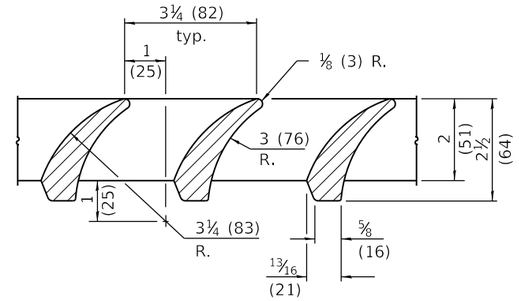

DETAIL C

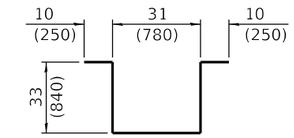

BAR u

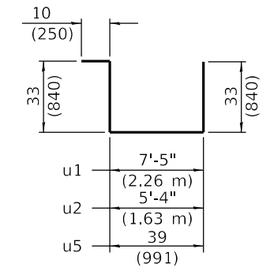

BARS u1, u2, & u5

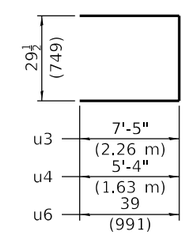

BARS u3, u4 & u6

INLET BOX

REQUIRED MATERIAL			
TYPE F			
Bar	Qty.	Size	Length
u	8	No. 4 (No.13)	9'-9" (2.96 m)
u1	3	No. 4 (No.13)	13'-9" (4.19 m)
u3	4	No. 4 (No.13)	17'-3½" (5.27 m)
Concrete		cu. yds. (m^3)	1.7 (1.3)
Reinf. bars		lbs. (kg)	126 (57.2)
Grating		sq. ft. (m^2)	10.9 (1.02)
TYPE E			
Bar	Qty.	Size	Length
u	6	No. 4 (No.13)	9'-9" (2.96 m)
u2	3	No. 4 (No.13)	11'-8" (3.56 m)
u4	4	No. 4 (No.13)	13'-1½" (4.00 m)
Concrete		cu. yds. (m^3)	1.3 (1.0)
Reinf. bars		lbs. (kg)	98 (44.5)
Grating		sq. ft. (m^2)	7.3 (0.68)
TYPE G			
Bar	Qty.	Size	Length
u	4	No. 4 (No.13)	9'-9" (2.69 m)
u5	3	No. 4 (No.13)	9'-7" (2.92 m)
u6	4	No. 4 (No.13)	8'-11½" (2.73 m)
Concrete		cu. yds. (m^3)	0.5 (0.4)
Reinf. bars		lbs. (kg)	70 (31.8)
Grating		sq. ft. (m^2)	3.6 (0.34)

NOTES

Welded wire reinforcement (WWR) may be used in lieu of reinforcement bars. Only one layer of WWR is permitted to avoid congestion.

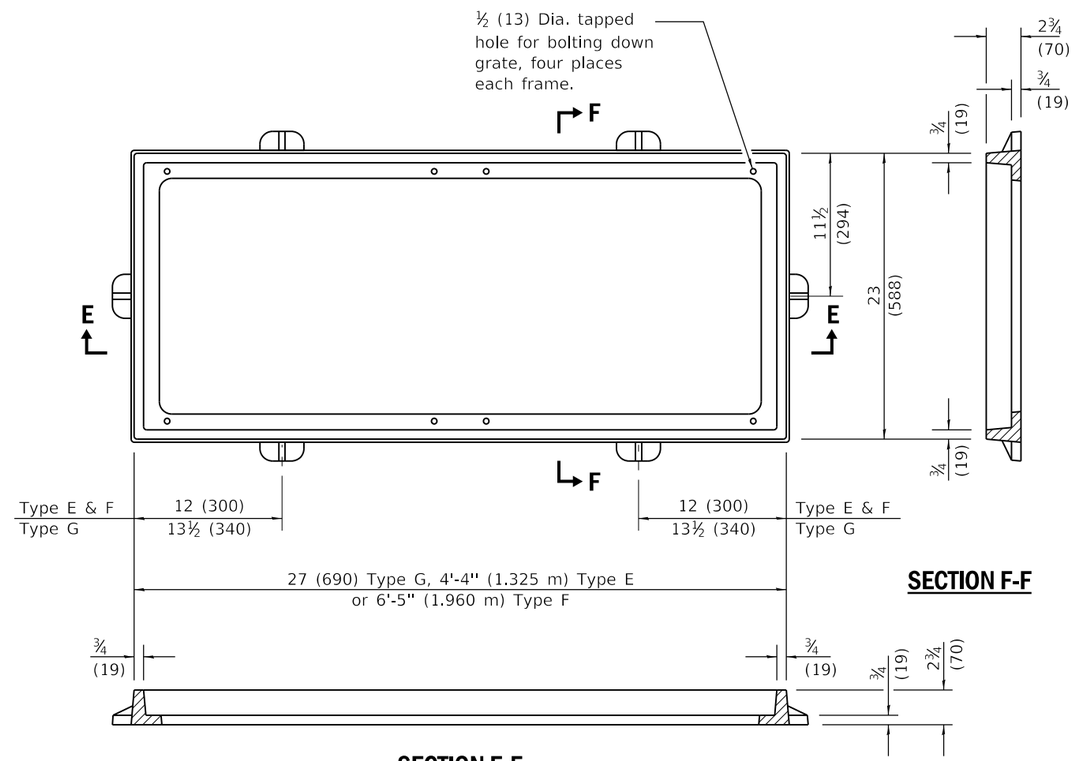

SECTION F-F

SECTION E-E

DETAIL OF CAST FRAME
(Type E shown)

Illinois Department of Transportation

PASSED January 1, 2021
ENGINEER OF POLICY AND PROCEDURES

APPROVED January 1, 2021
ENGINEER OF DESIGN AND ENVIRONMENT

ISSUED 1-1-97

SHOULDER INLET WITH CURB

(Sheet 2 of 2)

STANDARD 610001-09