# Illinois Department of Transportation

## Memorandum

| | |
|---|---|
| To: | Highway Standards Users |
| From: | Omer M. Osman Osman 10/23/15 |
| Subject: | Revision #217 |
| Date: | October 19, 2015 |

Revision #217 of the Highway Standards, effective April 1, 2016, is now available on the department's website.

The revisions are as follows:

| Removed | Inserted | Remarks |
|---|---|---|
| Standards by Subject/Title January 1, 2015 | Standards by Subject/Title April 1, 2016 | Updated. |
| Division 200 Index January 1, 2015 | Division 200 Index April 1, 2016 | Updated. |
| Division 300 Index January 1, 2015 | Division 300 Index April 1, 2016 | Updated. |
| Division 400 Index January 1, 2015 | Division 400 Index April 1, 2016 | Updated. |
| 420401-11 | 420401-12 | Revised pavement connector to be rigid only. Omitted wide flange beam terminal joint. Moved HMA pavement connector to new standard 420406. Renamed standard. |
| | 420406 | New standard for HMA pavement connector (formerly part of standard 420401). |
| 420501-05 | 420501-06 | Changed terminology from 'pavement fabric' to 'welded wire reinforcement'. |
| 420601-05 | 420601-06 | Changed terminology from 'pavement fabric' to 'welded wire reinforcement'. |

| Removed | Inserted | Remarks |
|---|---|---|
| 420701-02 | 420701-03 | Changed terminology from 'pavement fabric' to 'welded wire reinforcement'. Renamed standard. |
| 421001-02 | 421001-03 | Revised general notes with respect to 30' (9 m) bar length |
| Division 500 Index January 1, 2015 | Division 500 Index April 1, 2016 | Updated. |
| 542001-04 | 542001-05 | Added note to omit restraint angles and tie plates for multiple end sections. Corrected typos. |
| 542006-01 | | Deleted standard. Multiple round end sections will be covered by special provision. |
| 542011 | 542011-01 | Added note to omit restraint angles and tie plates for multiple end sections. Corrected typos. |
| 542016 | | Deleted standard. Multiple elliptical end sections will be covered under by special provision. |
| 542206-03 | 542206-04 | Changed terminology from 'welded wire fabric' to 'welded wire reinforcement'. |
| 542306-02 | 542306-03 | Changed terminology from 'fabric' to 'welded wire reinforcement'. |
| 542311-05 | 542311-06 | Corrected typo. |
| 542401-01 | 542401-02 | Revised THICKNESS values in table. |
| 542406-01 | 542406-02 | Revised THICKNESS values in table. |
| 542506-02 | 542506-03 | Increased length of inlet box to provide clearance for top U-bolt. |

| Division 600 Index January 1, 2015 | Division 600 Index April 1, 2016 | Updated. |
|---|---|---|
| 601001-04 | 601001-05 | Renamed standard. Omitted drainage mat option. |
| 601101-01 | 601101-02 | Renamed standard for consistency with standard specifications and other highway standards. |
| 602406-06 | 602406-07 | Changed terminology from 'welded wire fabric' to 'welded wire reinforcement'. |
| 602411-04 | 602411-05 | Changed terminology from 'welded wire fabric' to 'welded wire reinforcement'. |
| 602416-04 | 602416-05 | Changed terminology from 'welded wire fabric' to 'welded wire reinforcement'. |
| 602421-04 | 602421-05 | Changed terminology from 'welded wire fabric' to 'welded wire reinforcement'. |
| 602601-03 | 602601-04 | Changed terminology from 'welded wire fabric' to 'welded wire reinforcement'. |
| 604016-03 | 604016-04 | Corrected dimension on Section A-A. |
| 60606-02 | 60606-03 | Changed terminology from 'welded wire fabric' to 'welded wire reinforcement'. |
| 606101-04 | 606101-05 | Changed terminology from 'welded wire fabric' to 'welded wire reinforcement'. |
| 606201-02 | 606201-03 | Changed terminology from 'welded wire fabric' to 'welded wire reinforcement'. |
| 606306-03 | 606306-04 | Changed terminology from 'pavement fabric' to 'welded wire reinforcement'. |

| | | |
|---|---|---|
| 606401-01 | 606401-02 | Changed terminology from 'welded wire fabric' to 'welded wire reinforcement'. |
| 631031-13 | 631031-14 | Changed terminology from 'bridge approach pavement' to 'bridge approach slab'. |
| 635001-01 | 635001-02 | Added detail of reflector attached to post. Revised signature block. |
| 635006-03 | 725001 | Renumbered standard to 725001. Added object marker details. Moved guardrail / barrier wall / bridge rail reflectors detail to new standard 782006. |
| 635011-02 | 782006 | Renumbered standard to 782006. Added reflector spacing detail from standard 635006 (renumbered to 725001). Added object marker details. |
| Division 700 Index January 1, 2015 | Division 700 Index April 1, 2016 | Updated. |
| 701101-04 | 701101-05 | Corrected typo in title. |
| 701316-09 | 701316-10 | Changed standard reference from 635011 to 782006 in note 2. |
| 701321-14 | 701321-15 | Changed standard reference from 635011 to 782006 in note 2. |
| 701402-10 | 701402-11 | Added reference to standards 704001 and 782006 in note 2. |
| 701406-09 | 701406-10 | Revised distance between work zone speed limit sign and worker for consistency with other standards. |

| | | |
|---|---|---|
| 701416-08 | 701416-09 | Changed vertical panels from back-to-back to single-sided. |
| 701422-07 | 701422-08 | Added steady burn mono-directional lights to devices at work area. |
| 701423-08 | 701423-09 | Corrected reference to standard in note 4. Changed terminology to 'guardrail / barrier wall reflector. |
| 701426-07 | 701426-08 | Added trailer option for attenuator symbol. Added note 4. Revised distance between work and lead truck. Revised general notes. |
| 701427-03 | 701427-04 | Added note 5. Revised distance between work and lead truck. Revised general notes. |
| 701428 | 701428-01 | Added trailer option for attenuator symbol. |
| 701431-10 | 701431-11 | Changed drum spacing at work area to 100' (30 m) centers only. |
| 701446-06 | 701446-07 | Revised note 1 to always require tangent. |
| 701611 | 701611-01 | Moved first reverse curve/turn sign to middle of tangent. |
| 701701-09 | 701701-10 | Corrected sign number for LEFT TURN LANE CLOSED AHEAD. |
| 701801-05 | 701801-06 | Omitted orange safety fence from standard as this is covered in the standard specifications. |
| 701901-04 | 701901-05 | Added dimensions to barricades. Revised note for post mounted signs. Revised cone details. Added width restriction sign. |

| | | |
|---|---|---|
| 704001-07 | 704001-08 | Revised optional chamfer on all edges to 1" (25 mm). Changed standard reference from 635011 to 782006. Changed terminology from 'marker' to 'reflector'. |
| 781001-03 | 781001-04 | Revised LANE ENDS sign W4-2 to agree with MUTCD. |
| 782001 | 782001-01 | Removed word 'prismatic'. Revised title. |
| Division 800 Index January 1, 2015 | Division 800 Index April 1, 2016 | Updated. |
| | 821001 | New standard. |
| | 821006 | New standard. |
| 825001-02 | 825001-03 | Corrected connection at terminal block. |
| 876001-03 | 876001-04 | Revised sign numbers for consistency with current MUTCD. |
| 877001-05 | 877001-06 | Changed sign panel to 36"x36" (900 mm x 900 mm). Added option for blank-out sign. Added maximum weight of 100 lb. (45 kg) for sign panels or blank-out signs. Modified dimension to outer signal head. |
| 877002-02 | 877001-03 | Changed sign panel to 36"x36" (900 mm x 900 mm). Changed maximum weight to 100 lb. (45 lb.) for sign panel or blank-out sign. |
| 877006-04 | 877006-05 | Changed sign panel to 36"x36" (900 mm x 900 mm). Added option for blank-out sign. Added maximum weight of 100 lb. (45 kg) for sign panels or blank-out signs. Modified dimension to outer signal head. |

| | | |
|---|---|---|
| 877011-05 | 877011-06 | Revised luminaire mast arm note. Changed sign panel to 36"x36" (900 mm x 900 mm). Added option for blank-out sign. Added maximum weight of 100 lb. (45 kg) for sign panel or blank-out sign. Modified dimension to outer signal head. |
| 877012-02 | 877012-03 | Revised luminaire mast arm note. Changed sign panel to 36"x36" (900 mm x 900 mm). Added option for blank-out sign. Added maximum weight of 100 lb. (45 kg) for sign panel or blank-out sign. Modified dimension to outer signal head. |
| Division 000 Index January 1, 2015 | Division 000 Index April 1, 2016 | Updated. |
| Division BLR Index January 1, 2015 | Division BLR Index April 1, 2016 | Updated. |

If you have any questions pertaining to the Highway Standards, please contact the Policy and Procedures Section in the Bureau of Design and Environment at (217) 524-9311.

cc: Omer M. Osman
Aaron A. Weatherholt
John Baranzelli
HST-57985

April 1, 2016

Illinois Department of Transportation

**Standards by Division**

## DIVISION 200 EARTHWORK, LANDSCAPING, and EROSION CONTROL

| STD. NO. | TITLE |
|---|---|
| EARTHWORK | |
| 202001-01 | Earth Median Ditch Check |
| EROSION CONTROL | |
| 280001-07 | Temporary Erosion Control Systems |
| 285001-02 | Fabric Formed Concrete Revetment Mats |

April 1, 2016

Illinois Department of Transportation

**Standards by Division**

## DIVISION 300 SUBGRADES, SUBBASES, and BASE COURSES

| STD. NO. | TITLE |
|---|---|
| BASE COURSE | |
| 353001-04 | PCC Base Course with HMA Binder and Surface Courses |

April 1, 2016

Illinois Department of Transportation

**Standards by Division**

## DIVISION 400 SURFACE COURSES, PAVEMENTS, REHABILITATION, AND SHOULDERS

| STD. NO. | TITLE |
|---|---|
| BITUMINOUS SURFACES AND HOT-MIX ASPHALT PAVEMENTS | |
| 406001-06 | Entrance Ramp Terminal (Flexible Ramp Pavement Adjacent to Flexible Mainline Pavement) |
| 406101-05 | Exit Ramp Terminal (Flexible Ramp Pavement Adjacent to Flexible Mainline Pavement) |
| 406201-01 | Mailbox Turnout |
| PORTLAND CEMENT CONCRETE PAVEMENTS AND SIDEWALKS | |
| 420001-08 | Pavement Joints |
| 420101-05 | 24’ (7.2 m) Jointed PCC Pavement |
| 420106-05 | 36’ (10.8 m) Jointed PCC Pavement |
| 420111-03 | PCC Pavement Roundouts |
| 420201-09 | Entrance Ramp Terminal (Jointed PCC Ramp Pavement Adjacent to Jointed PCC Mainline Pavt.) |
| 420206-10 | Entrance Ramp Terminal (Jointed PCC Ramp Pavement Adjacent to CRC Mainline Pavement) |
| 420301-06 | Exit Ramp Terminal (Jointed PCC Ramp Pavement Adjacent to Jointed PCC Mainline Pavt.) |
| 420306-08 | Exit Ramp Terminal (Jointed PCC Ramp Pavement Adjacent to CRC Mainline Pavement) |
| 420401-12 | Pavement Connector (PCC) for Bridge Approach Slab |
| 420406 | Pavement Connector (HMA) for Bridge Approach Slab |
| 420501-06 | PCC Pavement and PCC Base Course Adjacent to Railroad Grade Crossing |
| 420601-06 | 24’ (7.2 m) PCC Pavement |
| 420701-03 | Pavement Welded Wire Reinforcement |
| 421001-03 | Bar Reinforcement for CRC Pavement |
| 421101-09 | 24’ (7.2 m) CRC Pavement (With Wide Flange Beam Terminal Joint) |
| 421106-09 | 36’ (10.8 m) CRC Pavement (With Wide Flange Beam Terminal Joint) |
| 421201-06 | 24’ (7.2 m) CRC Pavement (With Lug System) |
| 421206-06 | 36’ (10.8 m) CRC Pavement (With Lug System) |
| 424001-08 | Perpendicular Curb Ramps for Sidewalks |
| 424006-02 | Diagonal Curb Ramps for Sidewalks |
| 424011-02 | Corner Parallel Curb Ramps for Sidewalks |
| 424016-02 | Mid-block Curb Ramps for Sidewalks |
| 424021-03 | Depressed Corner for Sidewalks |
| 424026-01 | Entrance / Alley Pedestrian Crossings |
| 424031-01 | Median Pedestrian Crossings |
| PAVEMENT REHABILITATION | |
| 442001-04 | Class A Patches |
| 442101-07 | Class B Patches |
| 442201-03 | Class C and D Patches |
| SHOULDERS | |
| 482001-02 | HMA Shoulder Adjacent to Flexible Pavement |

| | |
|---|---|
| 482006-03 | HMA Shoulder Adjacent to Rigid Pavement |
| 482011-03 | HMA Shoulder Strips/Shoulders With Resurfacing or Widening and Resurfacing Projects |
| 483001-04 | PCC Shoulder |

April 1, 2016

Illinois Department of Transportation

**Standards by Division**

## DIVISION 500 BRIDGES and CULVERTS

| STD. NO. | TITLE |
|---|---|
| BRIDGES | |
| 515001-03 | Name Plate for Bridges |
| CULVERTS | |
| 542001-05 | Concrete End Sections for Pipe Culverts 15” (375 mm) thru 84” (2100 mm) Diameter |
| 542011-01 | Concrete End Sections for Elliptical Pipe Culverts 15” (375 mm) thru 72” (1800 mm) Equivalent Diameter |
| 542201-02 | Reinforced Concrete End Sections for Pipe Culverts, 15” (375 mm) thru 36” (900 mm) Diameter Skewed With Roadway |
| 542206-04 | Reinforced Concrete End Sections for Pipe Culverts, 42” (1050 mm) thru 60” (1500 mm) Diameter Skewed With Roadway |
| 542301-03 | Precast Reinforced Concrete Flared End Section |
| 542306-03 | Precast Reinforced Concrete Elliptical Flared End Section |
| 542311-06 | Traversable Pipe Grate |
| 542401-02 | Metal End Section for Pipe Culverts |
| 542406-02 | Metal End Section for Pipe Arches |
| 542501-02 | Inlet Box Type 24 (600) A |
| 542506-03 | Inlet Box Type 24 (600) B |
| 542511-02 | Inlet Box Type 24 (600) C |
| 542516-03 | Inlet Box Type 24 (600) D |
| 542521-02 | Inlet Box Type 24 (600) E |
| 542526-03 | Inlet Box Type 24 (600) F |
| 542531-04 | Inlet Box Type 24 (600) G |
| 542536-03 | Inlet Box Type 36 (900) A |
| 542541-02 | Inlet Box Type 48 (1200) A |
| 542546-01 | Flush Inlet Box for Median |
| 542601-03 | Reinforced Concrete Pipe Elbow 24”, 30” or 36” (600 mm, 750 mm or 900 mm) |
| 542606-02 | Reinforced Concrete Pipe Tee |

April 1, 2016

Illinois Department of Transportation

**Standards by Division**

## DIVISION 600 INCIDENTAL CONSTRUCTION

| STD. NO. | TITLE |
|---|---|
| DRAINAGE RELATED ITEMS | |
| 601001-05 | Pipe Underdrains |
| 601101-02 | Concrete Headwall for Pipe Underdrain |
| 602001-02 | Catch Basin, Type A |
| 602006-04 | Catch Basin, Type B |
| 602011-02 | Catch Basin, Type C |
| 602016-02 | Catch Basin, Type D |
| 602101-02 | Drainage Structures, Types 1, 2 & 3 |
| 602106-01 | Drainage Structures, Types 4, 5 & 6 |
| 602301-04 | Inlet, Type A |
| 602306-03 | Inlet, Type B |
| 602401-03 | Manhole, Type A |
| 602406-07 | Manhole, Type A, 6’ (1.8 m) Diameter |
| 602411-05 | Manhole, Type A, 7’ (2.1 m) Diameter |
| 602416-05 | Manhole, Type A, 8’ (2.4 m) Diameter |
| 602421-05 | Manhole, Type A, 9’ (2.7 m) Diameter |
| 602501-02 | Valve Vault, Type A |
| 602601-04 | Precast Reinforced Concrete Flat Slab Top |
| 602701-02 | Manhole Steps |
| 604001-04 | Frame and Lids, Type 1 |
| 604006-05 | Frame and Grate, Type 3 |
| 604011-05 | Frame and Grate, Type 3V |
| 604016-04 | Frame and Grate, Type 4 |
| 604021-03 | Base, Frame and Lids, Type 5 |
| 604026-03 | Frame and Grate, Type 6 |
| 604031-03 | Grate, Type 7 |
| 604036-03 | Grate, Type 8 |
| 604041-03 | Frame and Grate, Type 9 |
| 604046-03 | Frame and Grate, Type 10 |
| 604051-04 | Frame and Grate, Type 11 |
| 604056-04 | Frame and Grate, Type 11V |
| 604061-03 | Frame and Grate, Type 12 |
| 604066-02 | Frame and Lid, Type 15 |
| 604071-05 | Frame and Grate, Type 20 |
| 604076-04 | Frame and Grate, Type 21 |
| 604081-04 | Frames and Grates, Type 22 |
| 604086-03 | Frame and Grate, Type 23 |
| 604091-03 | Frame and Grate, Type 24 |
| 604101-01 | Median Inlet for 24” (600 mm) Reinforced Concrete Pipe |

| | |
|---|---|
| 604106-01 | Median Inlet for 36” (900 mm) Reinforced Concrete Pipe |
| 606001-06 | Concrete Curb Type B and Combination Concrete Curb and Gutter |
| 606006-03 | Outlet for Concrete Curb and Gutter, Type B-6.24 (B-15.60) |
| 606101-05 | Type A Gutter (Inlet, Outlet, and Entrance) |
| 606106-04 | Outlet, Type l for Type A Gutter |
| 606111-03 | Outlets, Type 2 for Type A Gutter |
| 606201-03 | Type B Gutter (Inlet, Outlet, and Entrance) |
| 606206-03 | Outlet, Type 1 for Type B Gutter |
| 606211-03 | Outlets, Type 2 for Type B Gutter |
| 606301-04 | PC Concrete Islands And Medians |
| 606306-04 | Corrugated PC Concrete Medians |
| 606401-02 | Paved Ditch |
| 610001-06 | Shoulder Inlet With Curb |

SAFETY RELATED ITEMS

| | |
|---|---|
| 630001-10 | Steel Plate Beam Guardrail |
| 630101-09 | Guardrail Mounted on Existing Culverts |
| 630106-01 | Long-Span Guardrail Over Culvert |
| 630201-06 | PCC/HMA Stabilization at Steel Plate Beam Guardrail |
| 630301-06 | Shoulder Widening for Type 1 (Special) Guardrail Terminals |
| 631006-08 | Traffic Barrier Terminal, Type 1B |
| 631011-09 | Traffic Barrier Terminal, Type 2 |
| 631026-06 | Traffic Barrier Terminal, Type 5 |
| 631031-14 | Traffic Barrier Terminal, Type 6 |
| 631032-08 | Traffic Barrier Terminal, Type 6A |
| 631033-06 | Traffic Barrier Terminal, Type 6B |
| 631046-04 | Traffic Barrier Terminal, Type 10 |
| 631051-03 | Traffic Barrier Terminal, Type 11 |
| 635001-02 | Delineators |
| 635011-02 | Reflector Marker and Mounting Details |
| 636001-02 | Cable Road Guard Single Strand |
| 637001-05 | Concrete Barrier 32 in. (815 mm) Height |
| 637006-03 | Concrete Barrier 42 in. (1065 mm) Height |
| 638101-02 | Concrete Glare Screen |
| 639001-02 | Sight Screen Precast Prestressed Concrete Panel Wall |
| 640001-01 | Sight Screen Chain Link Fence |
| 641001-01 | Sight Screen Cedar Stockade Fence Type S |
| 641006-01 | Sight Screen Wood Plank Fence Type P |
| 642001-02 | Shoulder Rumble Strips, 16 in. |
| 642006 | Shoulder Rumble Strips, 8 in. |
| 643001-02 | Sand Module Impact Attenuators |

OTHER ITEMS

| | |
|---|---|
| 664001-02 | Chain Link Fence |
| 665001-02 | Woven Wire Fence |
| 666001-01 | Right-of-Way Markers |
| 667001-01 | Drainage Markers |
| 667101-02 | Permanent Survey Markers |
| 668001-01 | U.S. Geological Survey and National Geodetic Survey Benchmarks, Resetting Method |

April 1, 2016

Illinois Department of Transportation

**Standards by Division**

## DIVISION 700 WORK ZONE TRAFFIC CONTROL AND PROTECTION, SIGNING, AND PAVEMENT MARKING

| STD. NO. | TITLE |
|---|---|
| WORK ZONE TRAFFIC CONTROL AND PROTECTION | |
| 701001-02 | Off-Road Operations, 2L, 2W, More Than 15’ (4.5 m) Away |
| 701006-05 | Off-Road Operations, 2L, 2W, 15’ (4.5 m) to 24” (600 mm) From Pavement Edge |
| 701011-04 | Off-Road Moving Operations, 2L, 2W, Day Only |
| 701101-05 | Off-Road Operations, Multilane, 15’ (4.5 m) to 24” (600 mm) From Pavement Edge |
| 701106-02 | Off-Road Operations, Multilane, More Than 15’ (4.5 m) Away |
| 701201-04 | Lane Closure, 2L, 2W, Day Only, for Speeds ≥ 45 MPH |
| 701206-03 | Lane Closure, 2L, 2W, Night Only, for Speeds ≥ 45 MPH |
| 701301-04 | Lane Closure, 2L, 2W, Short Time Operations |
| 701306-03 | Lane Closure, 2L, 2W, Slow Moving Operations Day Only, for Speeds ≥ 45 MPH |
| 701311-03 | Lane Closure, 2L, 2W, Moving Operations - Day Only |
| 701316-10 | Lane Closure, 2L, 2W, Bridge Repair, for Speeds ≥ 45 MPH |
| 701321-15 | Lane Closure, 2L, 2W, Bridge Repair with Barrier |
| 701326-04 | Lane Closure, 2L, 2W, Pavement Widening, for Speeds ≥ 45 MPH |
| 701331-04 | Lane Closure, 2L, 2W, With Run-Around, for Speeds ≥ 45 MPH |
| 701336-06 | Lane Closure, 2L, 2W, Work Areas in Series, for Speeds ≥ 45 MPH |
| 701400-08 | Approach to Lane Closure, Freeway/Expressway |
| 701401-09 | Lane Closure, Freeway/Expressway |
| 701402-11 | Lane Closure, Freeway/Expressway, with Barrier |
| 701406-10 | Lane Closure, Freeway/Expressway, Day Operations Only |
| 701411-09 | Lane Closure, Multilane, at Entrance or Exit Ramp, for Speeds ≥ 45 MPH |
| 701416-09 | Lane Closure, Freeway/Expressway, with Crossover and Barrier |
| 701421-07 | Lane Closure, Multilane, Day Operations Only, for Speeds ≥ 45 MPH to 55 MPH |
| 701422-08 | Lane Closure, Multilane, for Speeds ≥ 45 MPH to 55 MPH |
| 701423-09 | Lane Closure, Multilane, with Barrier, for Speeds ≥ 45 MPH to 55 MPH |
| 701426-08 | Lane Closure, Multilane, Intermittent or Moving Operation, for Speeds ≥ 45 MPH |
| 701427-04 | Lane Closure, Multilane, Intermittent or Moving Operation, for Speeds ≤ 40 MPH |
| 701428-01 | Traffic Control, Setup and Removal, Freeway/Expressway |
| 701431-11 | Lane Closure, Multilane, Undivided with Crossover, for Speeds ≥ 45 MPH to 55 MPH |
| 701446-07 | Two Lane Closure, Freeway/Expressway |
| 701451-03 | Ramp Closure Freeway/Expressway |
| 701456-03 | Partial Exit Ramp Closure Freeway/Expressway |
| 701501-06 | Urban Lane Closure, 2L, 2W, Undivided |
| 701502-06 | Urban Lane Closure, 2L, 2W, with Bidirectional Left Turn Lane |
| 701601-09 | Urban Lane Closure, Multilane, 1W or 2W with Nontraversable Median |
| 701602-07 | Urban Lane Closure, Multilane, 2W with Bidirectional Left Turn Lane |
| 701606-10 | Urban Single Lane Closure, Multilane, 2W with Mountable Median |
| 701611-01 | Urban Half Road Closure, Multilane, 2W with Mountable Median |

| | |
|---|---|
| 701701-10 | Urban Lane Closure, Multilane Intersection |
| 701801-06 | Sidewalk, Corner or Crosswalk Closure |
| 701901-05 | Traffic Control Devices |
| 704001-08 | Temporary Concrete Barrier |

SIGNING

| | |
|---|---|
| 720001-01 | Sign Panel Mounting Details |
| 720006-04 | Sign Panel Erection Details |
| 720011-01 | Metal Posts for Signs, Markers and Delineators |
| 720016-03 | Mast Arm Mounted Street Name Signs |
| 720021-02 | Sign Panels, Extruded Aluminum Type |
| 725001 | Object and Terminal Markers |
| 728001-01 | Telescoping Steel Sign Support |
| 729001-01 | Applications of Types A and B Metal Posts (For Signs & Markers) |
| 731001-01 | Base for Telescoping Steel Sign Support |

PAVEMENT MARKING

| | |
|---|---|
| 780001-05 | Typical Pavement Markings |
| 781001-04 | Typical Applications Raised Reflective Pavement Markers |
| 782001-01 | Prismatic Curb Reflectors |
| 782006 | Guardrail and Barrier Wall Reflector Mounting Details |

April 1, 2016

Illinois Department of Transportation

**Standards by Division**

## DIVISION 800 ELECTRICAL

| STD. NO. | TITLE |
|---|---|
| GENERAL ELECTRICAL REQUIREMENTS | |
| 805001-01 | Electrical Service Installation Details |
| WIREWAY AND CONDUIT SYSTEMS | |
| 812001 | Raceway Embedded in Structure |
| 814001-03 | Handholes |
| 814006-02 | Double Handholes |
| LIGHTING – LUMINAIRES | |
| 821001 | Underpass Lighting Wall Mount |
| 821006 | Underpass Lighting Suspended |
| 821101-01 | Luminaire Wiring Diagram |
| LIGHTING – CONTROLLERS | |
| 825001-03 | Lighting Controller, Pole Mounted, 240V |
| 825006-02 | Lighting Controller, Pole Mounted, 480V |
| 825011-03 | Lighting Controller, Pedestal Mounted, 240V |
| 825016-03 | Lighting Controller, Pedestal Mounted, 480V |
| 825021-03 | Lighting Controller, Base Mounted, 240V |
| 825026-03 | Lighting Controller, Base Mounted, 480V |
| 826001-01 | Navigation Obstruction Lighting Controller, 240V |
| 826006-01 | Navigation Obstruction Lighting Controller, 480V |
| LIGHTING – POLES | |
| 830001-03 | Light Pole Aluminum Mast Arm |
| 830006-03 | Light Pole Aluminum Davit Arm |
| 830011-02 | Light Pole Steel Mast Arm |
| 830016-02 | Light Pole Steel Davit Arm |
| 830021-02 | Light Pole Steel Tenon Top |
| 830026 | Temporary Roadway Lighting |
| LIGHTING – TOWERS | |
| 835001-01 | Light Tower |
| LIGHTING – FOUNDATIONS | |
| 836001-02 | Light Pole Foundation |
| 836006-01 | Light Pole Foundation with 32 in. (815 mm) Concrete Median Barrier |
| 836011-01 | Light Pole Foundation with 42 in. (1065 mm) Concrete Median Barrier |
| 837001-04 | Light Tower Foundation |

LIGHTING – BREAKAWAY DEVICES

| | |
|---|---|
| 838001 | Breakaway Devices |

TRAFFIC SIGNALS - CONTROLLERS AND EQUIPMENT

| | |
|---|---|
| 857001-01 | Standard Phase Designation Diagrams and Phase Sequences |
| 857006-01 | Supervised Railroad Interconnect Circuit |
| 862001-01 | Uninterruptable Power Supply (UPS) |

TRAFFIC SIGNALS - WIRE AND CABLE

| | |
|---|---|
| 873001-02 | Traffic Signal Grounding & Bonding |

TRAFFIC SIGNALS - POSTS AND FOUNDATIONS

| | |
|---|---|
| 876001-04 | Pedestrian Push Button Post |
| 877001-06 | Steel Mast Arm Assembly and Pole 16’ Through 55’ |
| 877002-03 | Steel Mast Arm Assembly and Pole 56’ Through 75’ |
| 877006-05 | Steel Mast Arm Assembly and Pole with Dual Mast Arms |
| 877011-06 | Steel Combination Mast Arm Assembly and Pole 16’ Through 55’ |
| 877012-03 | Steel Combination Mast Arm Assembly and Pole 56’ Through 75’ |
| 878001-10 | Concrete Foundation Details |

TRAFFIC SIGNALS - SIGNAL HEADS

| | |
|---|---|
| 880001-01 | Span Wire Mounted Signals and Flashing Beacon Installation |
| 880006-1 | Traffic Signal Mounting Details |

TRAFFIC SIGNALS - DETECTION

| | |
|---|---|
| 886001-01 | Detector Loop Installations |
| 886006-01 | Typical Layout for Detection Loops |

April 1, 2016

Illinois Department of Transportation

**Standards by Division**

## DIVISION 000 MISCELLANEOUS TABLES

| STD. NO. | TITLE |
|---|---|
| 000001-06 | Standard Symbols, Abbreviations and Patterns |
| 001001-02 | Areas of Reinforcement Bars |
| 001006 | Decimal of an Inch and of a Foot |

April 1, 2016

Illinois Department of Transportation

**Standards by Division**

## DIVISION BLR LOCAL ROADS

| STD. NO. | TITLE |
|---|---|
| BLR 10-6 | PCC Pavement Special |
| BLR 14-11 | Portland Cement Concrete Pavement (Nonreinforced) |
| BLR 17-4 | Traffic Control Devices - Day Labor Construction |
| BLR 18-6 | Traffic Control Devices - Day Labor Maintenance |
| BLR 20-7 | Traffic Barrier Terminal - Type 5R |
| BLR 21-9 | Typical Application of Traffic Control Devices for Construction on Rural Local Highways |
| BLR 22-7 | Typ. Appl. of T.C.D. for Rural Loc. Hwys. (2-Lane 2 Way Rural Traff.) (Rd. Closed to Thru Traff.) |
| BLR 23-4 | Traffic Barrier Terminal Type 1 |
| BLR 24-2 | Mailbox Turnout for Local Roads |
| BLR 25-1 | Type 1A Barricade for Non-NHS Routes |
| BLR 26-3 | Steel Plate Beam Guardrail 29 in. (731 mm) Height |
| BLR 27-1 | Traffic Barrier Terminal Type 5A |

Illinois Department of Transportation

**Standards by Subject/Title** **April 1, 2016**


| SUBJECT/TITLE | STD. NO. |
|---|---|
| **A** | |
| Abbreviations, Symbols and Patterns | 000001 |
| **B** | |
| Barricade, Type 1A for Non-NHS Routes | BLR 25 |
| Barrier, Concrete, 32 in. (815 mm) Height | 637001 |
| Barrier, Concrete, 42 in. (1065 mm) Height | 637006 |
| Barrier, Concrete, Temporary | 704001 |
| Base Course, PCC with HMA Binder and Surface Courses | 353001 |
| Benchmarks, Method of Resetting | 668001 |
| **C** | |
| Cable, Road Guard, Single Strand | 636001 |
| Catch Basin, Type A | 602001 |
| Catch Basin, Type B | 602006 |
| Catch Basin, Type C | 602011 |
| Catch Basin, Type D | 602016 |
| Circuit, Supervised Railroad Interconnect | 857006 |
| Curb Type B and Combination Curb and Gutter, Concrete | 606001 |
| Curb Ramps for Sidewalks, Corner Parallel | 424011 |
| Curb Ramps for Sidewalks, Diagonal | 424006 |
| Curb Ramps for Sidewalks, Mid-block | 424016 |
| Curb Ramps for Sidewalks, Perpendicular | 424001 |
| **D** | |
| Decimal Equivalents of an Inch and Foot | 001006 |
| Delineators | 635001 |
| Depressed Corner for Sidewalks | 424021 |
| Detection Loops, Typical Layout | 886006 |
| Detector Loop Installations | 886001 |
| Ditch, Paved | 606401 |
| Ditch Check, Earth Median | 202001 |
| Drainage Structures, Type 1, 2 and 3 | 602101 |
| Drainage Structures, Type 4, 5 and 6 | 602106 |
| **E** | |
| Elbow, Concrete Pipe, 24 in. (600 mm), 30 in. (750 mm) or 36 in. (900) Diameter | 542601 |
| Electrical Service Installation Details | 805001 |
| End Section, Flared, Precast Reinforced Concrete, Elliptical | 542306 |
| End Section, Flared, Precast Reinforced Concrete, Round | 542301 |
| End Section, Metal, for Pipe Arch | 542406 |
| End Section, Metal, for Pipe Culvert | 542401 |

End Sections, Reinforced Concrete:
Pipe Culverts, 15 in. (375 mm) thru 84 in. (2100 mm) Diameter.....542001
Pipe Culverts, Elliptical, 15 in. (375 mm) thru 72 in. (1800 mm) Equivalent Diameter .....542011
Skewed, for 15 in. (375 mm) thru 36 in. (900 mm) Diameter.....542201
Skewed, for 42 in. (1050 mm) thru 60 in. (1500 mm) Diameter.....542206
Erosion Control Systems, Temporary .....280001

F

Fence, Chain Link.....664001
Fence, Woven Wire .....665001
Flashing Beacon Installation .....880001
Flat Slab Top, Precast Reinforced Concrete.....602601
Foundations, Details, Concrete.....878001
Frames, Grates and Lids:
Type 1 Frame and Lids .....604001
Type 3 Frame and Grate.....604006
Type 3V Frame and Grate.....604011
Type 4 Frame and Grate.....604016
Type 5 Base, Frame and Lids .....604021
Type 6 Frame and Grate.....604026
Type 7 Grate .....604031
Type 8 Grate .....604036
Type 9 Frame and Grate.....604041
Type 10 Frame and Grate.....604046
Type 11 Frame and Grate.....604051
Type 11V Frame and Grate.....604056
Type 12 Frame and Grate.....604061
Type 15 Frame and Lid .....604066
Type 20 Frame and Grate.....604071
Type 21 Frame and Grate.....604076
Type 22 Frames and Grates .....604081
Type 23 Frame and Grate.....604086
Type 24 Frame and Grate.....604091

G

Glare Screen, Concrete .....638101
Grate, Traversable Pipe.....542311
Guardrail:
Long Span Over Culverts.....630106
Mounted on Existing Culverts.....630101
Steel Plate Beam, .....630001
Steel Plate Beam, 29 in. (731 mm) Height .....BLR 26
Steel Plate Beam, PCC/HMA Stabilization .....630201

H

Handholes, Concrete and Polymer Concrete, Double.....814006
Handholes, Polymer Concrete, Single.....814001
Headwall for Pipe Underdrains, Concrete .....601101

I

Impact Attenuators, Sand Module ..... 643001
Inlet:
For 24 in. (600 mm) Reinforced Concrete Pipe in Median ..... 604101
For 36 in. (900 mm) Reinforced Concrete Pipe in Median ..... 604106
For Shoulder With Curb ..... 610001
For Type B Gutter ..... 606201
Outlet & Entrance for Type A Gutter ..... 606101
Type A ..... 602301
Type B ..... 602306
Inlet Box:
Flush for Median ..... 542546
Type 24 (600) A ..... 542501
Type 24 (600) B ..... 542506
Type 24 (600) C ..... 542511
Type 24 (600) D ..... 542516
Type 24 (600) E ..... 542521
Type 24 (600) F ..... 542526
Type 24 (600) G ..... 542531
Type 24 (900) A ..... 542536
Type 48 (1200) A ..... 542541
Islands, Concrete ..... 606301

J/K

Joints, Pavement ..... 420001

L

Lane Closure ..... (see Traffic Control and Protection)
Lighting Controller, Pole Mounted, 240V ..... 825001
Lighting Controller, Pole Mounted, 480V ..... 825006
Lighting Controller, Pedestal Mounted, 240V ..... 825011
Lighting Controller, Pedestal Mounted, 480V ..... 825016
Lighting Controller, Base Mounted, 240V ..... 825021
Lighting Controller, Base Mounted, 480V ..... 825026
Lighting Controller, Navigation Obstruction, 240V ..... 826001
Lighting Controller, Navigation Obstruction, 480V ..... 826006
Lighting, Underpass, Suspended ..... 820006
Lighting, Underpass, Wall Mount ..... 820001
Light Pole, Aluminum, Mast Arm ..... 830001
Light Pole, Aluminum, Davit Arm ..... 830006
Light Pole, Breakaway Devices ..... 838001
Light Pole, Steel, Mast Arm ..... 830011
Light Pole, Steel, Davit Arm ..... 830016
Light Pole, Steel, Tenon Top ..... 830021
Light Tower ..... 835001
Light Pole Foundation ..... 836001
Light Pole Foundation with 32 in. (815 mm) Concrete Median Barrier ..... 836006
Light Pole Foundation with 42 in. (1065 mm) Concrete Median Barrier ..... 836011
Light Tower Foundation ..... 837001
Luminaire Wiring Diagram ..... 821101

M

Mailbox Turnout, Local System ..... BLR-24
Mailbox Turnout, State System ..... 406201
Manhole, Type A ..... 602401
Manhole, Type A, 6 ft. (1.8 m) Diameter ..... 602406
Manhole, Type A, 7 ft. (2.1 m) Diameter ..... 602411
Manhole, Type A, 8 ft. (2.4 m) Diameter ..... 602416
Manhole, Type A, 9 ft. (2.7 m) Diameter ..... 602421
Manhole Steps ..... 602701
Markers:
- Drainage ..... 667001
- Permanent Survey ..... 667101
- Right-of-Way ..... 666001

Mast Arm Assembly and Pole 16’ Through 55’, Steel Combination ..... 877011
Mast Arm Assembly and Pole 56’ Through 75’, Steel Combination ..... 877012
Mast Arm Assembly and Pole, Steel, Dual Mast Arms ..... 877006
Mast Arm Assembly and Pole 16’ Through 55’, Steel ..... 877001
Mast Arm Assembly and Pole 56’ Through 75’, Steel ..... 877002
Mast Arm Mounted Street Name Signs ..... 720016
Median, Concrete ..... 606301
Median, Concrete, Corrugated ..... 606306

N

Name Plates for Bridges ..... 515001

O

Object and Terminal Markers ..... 725001
Outlet:
- Inlet and entrance for Type A Gutter ..... 606101
- Type 1, for Type A Gutter ..... 606106
- Type 1, for Type B Gutter ..... 606206
- Type 2, for Type A Gutter ..... 606111
- Type 2, for Type B Gutter ..... 606211
- Type B-6.24 (B-15.60) for Concrete Curb and Gutter ..... 606006
- For Type B Gutter, Standard ..... 606201

P/Q

Patching, Class A ..... 442001
Patching, Class B ..... 442101
Patching, Class C and D ..... 442201
Pavement:
- 24' (7.2 m) Continuously Reinforced PCC With Lug System ..... 421201
- 24' (7.2 m) Continuously Reinforced PCC With Wide Flange Beam Term. Joint ..... 421101
- 24' (7.2 m) Jointed PCC ..... 420101
- 24' (7.2 m) PCC ..... 420601
- 36' (10.8 m) Continuously Reinf. PCC With Wide Flange Beam Term. Joint ..... 421106
- 36' (10.8 m) Continuously Reinforced PCC With Lug System ..... 421206
- 36' (10.8 m) Jointed PCC ..... 420106
- Adjacent to Railroad Grade Crossing, PCC ..... 420501

Connector (HMA) for Bridge Approach Slab....420406
Connector (PCC) for Bridge Approach Slab....420401
Nonreinforced PCC....BLR 14
Reinforcement for Continuously Reinforced PCC Pavement....421001
Roundouts, PCC....420111
Special, PCC....BLR 10
Welded Wire Reinforcement....420701
Pavement Markers, Raised Reflective, Applications....781001
Pavement Markings....780001
Pedestrian Crossings, Entrance / Alley....424026
Pedestrian Crossings, Median....424031
Phase Sequences....857001
Pipe Underdrains....601001
Posts, Metal, Applications for Type A and B....729001
Posts, Metal, for Signs, Markers and Delineators....720011
Push Button Post....876001

R

Raceway Embedded in Structure....812001
Ramp Closure, Freeway/Expressway....701451
Ramp Closure, Partial Exit, Freeway/Expressway....701456
Ramp Terminal:
Entrance, Flexible Adjacent to Flexible Mainline Pavement....406001
Entrance, Jointed PCC Adjacent to CRC Mainline Pavement....420206
Entrance, Jointed PCC Adjacent to Jointed PCC Mainline Pavement....420201
Exit, Flexible Adjacent to Flexible Mainline Pavement....406101
Exit, Jointed PCC Adjacent to CRC Mainline Pavement....420306
Exit, Jointed PCC Adjacent to Jointed PCC Mainline Pavement....420301
Reflector Marker and Mounting Details....635011
Reflector Mounting Details, Guardrail and Barrier....782006
Reflectors, Prismatic Curb....782001
Reinforcement Bars, Areas, Weights and Spacing....001001
Revetment Mat, Fabric Formed Concrete....285001
Rumble Strips, Shoulder, 16 inch....642001
Rumble Strips, Shoulder, 8 inch....642006

S

Shoulder:
Adjacent to Flexible Pavement, HMA....482001
Adjacent to Rigid Pavement, HMA....482006
PCC....483001
or Shoulder Strips With Resurfacing or Widening and Resurfacing Projects....482011
Sidewalks, Corner Parallel Curb Ramps for....424011
Sidewalks, Diagonal Curb Ramps for....424006
Sidewalks, Mid-block Curb Ramps for....424016
Sidewalks, Perpendicular Curb Ramps for....424001
Sight Screen, Chain Link Fence....640001
Sight Screen, Concrete Panel Wall, Precast Prestressed....639001
Sight Screen, Wood Fence, Cedar Stockade....641001
Sight Screen, Wood Fence, Wood Plank....641006

Sign Panel, Erection Details....720006
Sign Panel, Extruded Aluminum Type....720021
Sign Panel, Mounting Details....720001
Sign Support, Telescoping Steel....728001
Sign Support, Telescoping Steel, Base for....731001
Symbols, Abbreviations, and Patterns....000001

T

Tee, Concrete Pipe....542606
Traffic Barrier Terminal:
- Type 1.... BLR-23
- Type 1B....631006
- Type 1 Special, Shoulder Widening for....630301
- Type 2....631011
- Type 5A....BLR 27
- Type 5R....BLR 20
- Type 6....631031
- Type 6A....631032
- Type 6B....631033
- Type 10....631046
- Type 11....631051

Traffic Control:
- Devices....701901
- Devices:
  - Type 1A Barricade for Non-NHS Routes....BLR 25
  - Day Labor Construction....BLR 17
  - Day Labor Maintenance....BLR 18
  - Typical Application of, for Construction on Rural Local Highways....BLR 21
  - Typical Application of, for Construction on Rural Local Highways (Two-Lane Two Way Rural Traffic) (Road Closed to Thru Traffic)....BLR 22
- Lane Closure, 2L, 2W:
  - Bridge Repair, for Speeds ≥ 45 MPH....701316
  - Bridge Repair with Barrier....701321
  - Day Only, for Speeds ≥ 45 MPH....701201
  - Moving Operations - Day Only....701311
  - Night Only, for Speeds ≥ 45 MPH....701206
  - Pavement Widening, for Speeds ≥ 45 MPH....701326
  - Short Time Operations....701301
  - Slow Moving Operations Day Only, for Speeds ≥ 45 MPH....701306
  - With Run-Around, for Speeds ≥ 45 MPH....701331
  - Work Areas in Series, for Speeds ≥ 45 MPH....701336
- Lane Closure, Freeway/Expressway....701401
- Lane Closure, Freeway/Expressway:
  - Approach to....701400
  - Day Operations Only....701406
  - Sidewalk, Corner or Crosswalk Closure....701801
  - Two Lane Closure....701446
  - with Barrier....701402
  - with Crossover and Barrier....701416
- Lane Closure, Multilane:

at Entrance or Exit Ramp, for Speeds ≥ 45 MPH.....701411
Day Operations Only, for Speeds ≥ 45 MPH to 55 MPH.....701421
for Speeds ≥ 45 MPH to 55 MPH .....701422
Intermittent or Moving Operation, for Speeds ≥ 45 MPH .....701426
Intermittent or Moving Operation, for Speeds ≤ 40 MPH .....701427
Undivided With Crossover, for Speeds ≥ 45 MPH to 55 MPH.....701431
with Barrier, for Speeds ≥ 45 MPH to 55 MPH.....701423
Lane Closure, Urban:
2L, 2W, Undivided.....701501
2L, 2W, with Bidirectional Left Turn Lane.....701502
Multilane, 1W or 2W with Nontraversable Median .....701601
Multilane, 2W with Bidirectional Left Turn Lane.....701602
Multilane, Single Lane Closure, 2W with Mountable Median .....701606
Multilane, Half Road, Closure, 2W with Mountable Median .....701611
Multilane Intersection.....701701
Off-Road Operations:
2L 2W, 15 ft. (4.5 m) to 24 in (600 mm) From Pavement Edge .....701006
2L 2W, More Than 15 ft. (4.5 m) Away.....701001
Moving, 2L 2W, Day Only.....701011
Multilane, 15 ft. (4.5 m) to 24 in. (600 mm) From Pavement Edge .....701101
Multilane, More Than 15 ft. (4.5 m) Away.....701106
Setup and Removal, Freeway/Expressway .....701428
Traffic Signal Grounding & Bonding.....873001
Traffic Signal Mounting Details, Post and Bracket Mounted.....880006
Traffic Signal Mounting Details, Span Wire Mounted and Flashing Beacon.....880001

U-Z

Uninterruptable Power Supply (UPS).....862001
Valve Vault, Type A .....602501

| | |
|---|---|
| ABV | ABOVE |
| A/C | ACCESS CONTROL |
| AC | ACRE |
| ADJ | ADJUST |
| AS | AERIAL SURVEYS |
| AGG | AGGREGATE |
| AH | AHEAD |
| APT | APARTMENT |
| ASPH | ASPHALT |
| AUX | AUXILIARY |
| AGS | AUXILIARY GAS VALVE (SERVICE) |
| AVE | AVENUE |
| AX | AXIS OF ROTATION |
| BK | BACK |
| B-B | BACK TO BACK |
| BKPL | BACKPLATE |
| B | BARN |
| BARR | BARRICADE |
| BGN | BEGIN |
| BM | BENCHMARK |
| BIND | BINDER |
| BIT | BITUMINOUS |
| BTM | BOTTOM |
| BLVD | BOULEVARD |
| BRK | BRICK |
| BBOX | BUFFALO BOX |
| BLDG | BUILDING |
| CIP | CAST IRON PIPE |
| CB | CATCH BASIN |
| C-C | CENTER TO CENTER |
| CL | CENTERLINE OR CLEARANCE |
| CL-E | CENTERLINE TO EDGE |
| CL-F | CENTERLINE TO FACE |
| CTS | CENTERS |
| CERT | CERTIFIED |
| CHSLD | CHISELED |
| CS | CITY STREET |
| CP | CLAY PIPE |
| CLSD | CLOSED |
| CLID | CLOSED LID |
| CT | COAT OR COURT |
| COMB | COMBINATION |
| C | COMMERCIAL BUILDING |
| CE | COMMERCIAL ENTRANCE |
| CONC | CONCRETE |
| CONST | CONSTRUCT |
| CONTD | CONTINUED |
| CONT | CONTINUOUS |
| COR | CORNER |
| CORR | CORRUGATED |
| CMP | CORRUGATED METAL PIPE |
| CNTY | COUNTY |
| CH | COUNTY HIGHWAY |
| CSE | COURSE |
| XSECT | CROSS SECTION |
| $m^3$ | CUBIC METER |
| $mm^3$ | CUBIC MILLIMETER |
| CU YD | CUBIC YARD |
| CULV | CULVERT |
| C&G | CURB & GUTTER |
| D | DEGREE OF CURVE |
| DC | DEPRESSED CURVE |
| DET | DETECTOR |
| DIA | DIAMETER |
| DIST | DISTRICT |
| DOM | DOMESTIC |
| DBL | DOUBLE |
| DSEL | DOWNSTREAM ELEVATION |
| DSFL | DOWNSTREAM FLOWLINE |
| DR | DRAINAGE OR DRIVE |
| DI | DRAINAGE INLET OR DROP INLET |
| DRV | DRIVEWAY |
| DCT | DUCT |
| EA | EACH |
| EB | EASTBOUND |
| EOP | EDGE OF PAVEMENT |
| E-CL | EDGE TO CENTERLINE |
| E-E | EDGE TO EDGE |
| EL | ELEVATION |
| ENTR | ENTRANCE |
| EXC | EXCAVATION |
| EX | EXISTING |
| EXPWAY | EXPRESSWAY |
| E | EXTERNAL DISTANCE OF HORIZONTAL CURVE |
| E | OFFSET DISTANCE TO VERTICAL CURVE |
| F-F | FACE TO FACE |
| FA | FEDERAL AID |
| FAI | FEDERAL AID INTERSTATE |
| FAP | FEDERAL AID PRIMARY |
| FAS | FEDERAL AID SECONDARY |
| FAUS | FEDERAL AID URBAN SECONDARY |
| FP | FENCE POST |
| FE | FIELD ENTRANCE |
| FH | FIRE HYDRANT |
| FL | FLOW LINE |
| FB | FOOT BRIDGE |
| FDN | FOUNDATION |
| FR | FRAME |
| F&G | FRAME & GRATE |
| FRWAY | FREEWAY |
| GAL | GALLON |
| GALV | GALVANIZED |
| G | GARAGE |
| GM | GAS METER |
| GV | GAS VALVE |
| GRAN | GRANULAR |
| GR | GRATE |
| GRVL | GRAVEL |
| GND | GROUND |
| GUT | GUTTER |
| GP | GUY POLE |
| GW | GUY WIRE |
| HH | HANDHOLE |
| HATCH | HATCHING |
| HD | HEAD |
| HDW | HEADWALL |
| HDUTY | HEAVY DUTY |
| ha | HECTARE |
| HMA | HOT MIX ASPHALT |
| HWY | HIGHWAY |
| HORIZ | HORIZONTAL |
| HSE | HOUSE |
| IL | ILLINOIS |
| IMP | IMPROVEMENT |
| IN DIA | INCH DIAMETER |
| INL | INLET |
| INST | INSTALLATION |
| IDS | INTERSECTION DESIGN STUDY |
| INV | INVERT |
| IP | IRON PIPE |
| IR | IRON ROD |
| JT | JOINT |
| kg | KILOGRAM |
| km | KILOMETER |
| LS | LANDSCAPING |
| LN | LANE |
| LT | LEFT |
| LP | LIGHT POLE |
| LGT | LIGHTING |
| LF | LINEAL FEET OR LINEAR FEET |
| L | LITER OR CURVE LENGTH |
| LC | LONG CHORD |
| LNG | LONGITUDINAL |
| L SUM | LUMP SUM |
| MACH | MACHINE |
| MB | MAIL BOX |
| MH | MANHOLE |
| MATL | MATERIAL |
| MED | MEDIAN |
| m | METER |
| METH | METHOD |
| M | MID-ORDINATE |
| mm | MILLIMETER |
| mm DIA | MILLIMETER DIAMETER |
| MIX | MIXTURE |
| MBH | MOBILE HOME |
| MOD | MODIFIED |
| MFT | MOTOR FUEL TAX |
| N & BC | NAIL & BOTTLE CAP |
| N & C | NAIL & CAP |
| N & W | NAIL & WASHER |
| NOAA | NATIONAL OCEANIC ATMOSPHERIC ADMINISTRATION |
| NC | NORMAL CROWN |
| NB | NORTHBOUND |
| NE | NORTHEAST |
| NW | NORTHWEST |
| OLID | OPEN LID |
| PAT | PATTERN |
| PVD | PAVED |
| PVMT | PAVEMENT |
| PM | PAVEMENT MARKING |
| PED | PEDESTAL |
| PNT | POINT |
| PC | POINT OF CURVATURE |
| PI | POINT OF INTERSECTION OF HORIZONTAL CURVE |
| PRC | POINT OF REVERSE CURVE |
| PT | POINT OF TANGENCY |
| POT | POINT ON TANGENT |
| POLYETH | POLYETHYLENE |
| PCC | PORTLAND CEMENT CONCRETE |
| PP | POWER POLE OR PRINCIPAL POINT |
| PRM | PRIME |
| PE | PRIVATE ENTRANCE |
| PROF | PROFILE |
| PGL | PROFILE GRADELINE |
| PROJ | PROJECT |
| P.C. | PROPERTY CORNER |
| PL | PROPERTY LINE |
| PR | PROPOSED |
| R | RADIUS |
| RR | RAILROAD |
| RRS | RAILROAD SPIKE |
| RPS | REFERENCE POINT STAKE |
| REF | REFLECTIVE |
| RCCP | REINFORCED CONCRETE CULVERT PIPE |
| REINF | REINFORCEMENT |
| REM | REMOVAL |
| RC | REMOVE CROWN |
| REP | REPLACEMENT |
| REST | RESTAURANT |
| RESURF | RESURFACING |
| RET | RETAINING |
| RT | RIGHT |
| ROW | RIGHT-OF-WAY |
| RD | ROAD |
| RDWY | ROADWAY |
| RTE | ROUTE |
| SAN | SANITARY |
| SANS | SANITARY SEWER |
| SEC | SECTION |
| SEED | SEEDING |
| SHAP | SHAPING |
| S | SHED |
| SH | SHEET |
| SHLD | SHOULDER |
| SW | SIDEWALK OR SOUTHWEST |
| SIG | SIGNAL |
| SOD | SODDING |
| SM | SOLID MEDIAN |
| SB | SOUTHBOUND |
| SE | SOUTHEAST |
| SPL | SPECIAL |
| SD | SPECIAL DITCH |
| SQ FT | SQUARE FEET |
| $m^2$ | SQUARE METER |
| $mm^2$ | SQUARE MILLIMETER |
| SQ YD | SQUARE YARD |
| STB | STABILIZED |
| STD | STANDARD |
| SBI | STATE BOND ISSUE |
| SR | STATE ROUTE |
| STA | STATION |
| SPBGR | STEEL PLATE BEAM GUARDRAIL |
| SS | STORM SEWER |
| STY | STORY |
| ST | STREET |
| STR | STRUCTURE |
| e | SUPERELEVATION RATE |
| S.E. RUN. | SUPERELEVATION RUNOFF LENGTH |
| SURF | SURFACE |
| SMK | SURVEY MARKER |
| T | TANGENT DISTANCE |
| T.R. | TANGENT RUNOUT DISTANCE |
| TEL | TELEPHONE |
| TB | TELEPHONE BOX |
| TP | TELEPHONE POLE |
| TEMP | TEMPORARY |
| TBM | TEMPORARY BENCH MARK |
| TD | TILE DRAIN |
| TBE | TO BE EXTENDED |
| TBR | TO BE REMOVED |
| TBS | TO BE SAVED |
| TWP | TOWNSHIP |
| TR | TOWNSHIP ROAD |
| TS | TRAFFIC SIGNAL |
| TSCB | TRAFFIC SIGNAL CONTROL BOX |
| TSC | TRAFFIC SYSTEMS CENTER |
| TRVS | TRANSVERSE |
| TRVL | TRAVEL |
| TRN | TURN |
| TY | TYPE |
| T-A | TYPE A |
| TYP | TYPICAL |
| UNDGND | UNDERGROUND |
| USGS | U.S. GEOLOGICAL SURVEY |
| USEL | UPSTREAM ELEVATION |
| USFL | UPSTREAM FLOWLINE |
| UTIL | UTILITY |
| VBOX | VALVE BOX |
| VV | VALVE VAULT |
| VLT | VAULT |
| VEH | VEHICLE |
| VP | VENT PIPE |
| VERT | VERTICAL |
| VC | VERTICAL CURVE |
| VPC | VERTICAL POINT OF CURVATURE |
| VPI | VERTICAL POINT OF INTERSECTION |
| VPT | VERTICAL POINT OF TANGENCY |
| WM | WATER METER |
| WV | WATER VALVE |
| WMAIN | WATER MAIN |
| WB | WESTBOUND |
| WILDFL | WILDFLOWERS |
| W | WITH |
| WO | WITHOUT |

Illinois Department of Transportation

PASSED January 1, 2011

Michael Brand

ENGINEER OF POLICY AND PROCEDURES

APPROVED January 1, 2011

ENGINEER OF DESIGN AND ENVIRONMENT

ISSUED 1-1-97

| DATE | REVISIONS |
|---|---|
| 1-1-11 | Updated abbreviations |
| | and symbols. |
| | |
| 1-1-08 | Updated abbreviations |
| | and symbols. |
| | |

# STANDARD SYMBOLS, ABBREVIATIONS AND PATTERNS

(Sheet 1 of 8)

STANDARD 000001–06

## ADJUSTMENT ITEMS

| | EX | PR |
|---|---|---|
| Structure To Be Adjusted | | ADJ |
| Structure To Be Cleaned | | C |
| Main Structure To Be Filled | | FM |
| Structure To Be Filled | | F |
| Structure To Be Filled Special | | FSP |
| Structure To Be Removed | | R |
| Structure To Be Reconstructed | | REC |
| Structure To Be Reconstructed Special | | RSP |
| Frame and Grate To Be Adjusted | | A |
| Frame and Lid To Be Adjusted | | A |
| Domestic Service Box To Be Adjusted | | A |
| Valve Vault To Be Adjusted | | A |
| Special Adjustment | | SP |
| Item To Be Abandoned | | AB |
| Item To Be Moved | | M |
| Item To Be Relocated | | REL |
| Pavement Removal and Replacement | | |

Illinois Department of Transportation

PASSED January 1, 2011
Michael Brand
ENGINEER OF POLICY AND PROCEDURES

APPROVED January 1, 2011
Scott Bennett
ENGINEER OF DESIGN AND ENVIRONMENT

ISSUED 1-1-97

## ALIGNMENT ITEMS

| | EX | PR |
|---|---|---|
| Baseline | | |
| Centerline | | |
| Centerline Break Circle | | |
| Baseline Symbol | | |
| Centerline Symbol | | |
| PI Indicator | | |
| Point Indicator | | |
| Horizontal Curve Data (Half Size) | CURVE<br>P.I. STA=<br>Δ=<br>D=<br>R=<br>T=<br>L=<br>E=<br>e=<br>T.R.=<br>S.E. RUN=<br>P.C. STA=<br>P.T. STA= | CURVE<br>P.I. STA=<br>Δ=<br>D=<br>R=<br>T=<br>L=<br>E=<br>e=<br>T.R.=<br>S.E. RUN=<br>P.C. STA=<br>P.T. STA= |

## BOUNDARIES ITEMS

| | EX | PR |
|---|---|---|
| Dashed Property Line | | |
| Solid Property/Lot Line | | |
| Section/Grant Line | | |
| Quarter Section Line | | |
| Quarter/Quarter Section Line | | |
| County/Township Line | | |
| State Line | | |
| Iron Pipe Found | | |
| Iron Pipe Set | | |
| Survey Marker | | |
| Property Line Symbol | | |
| Same Ownership Symbol (Half Size) | | |
| Northwest Quarter Corner (Half Size) | | |
| Section Corner (Half Size) | | |
| Southeast Quarter Corner (Half Size) | | |

## CONTOUR ITEMS

| | EX | PR |
|---|---|---|
| Approx. Index Line | | |
| Approx. Intermediate Line | | |
| Index Contour | | |
| Intermediate Contour | | |

## DRAINAGE ITEMS

| | EX | PR |
|---|---|---|
| Channel or Stream Line | | |
| Culvert Line | | |
| Grading & Shaping Ditches | | |
| Drainage Boundary Line | | |
| Paved Ditch | | |
| Aggregate Ditch | | |
| Pipe Underdrain | | |
| Storm Sewer | | |
| Flowline | | |
| Ditch Check | | |
| Headwall | | |
| Inlet | | |
| Manhole | | |
| Summit | | |
| Roadway Ditch Flow | | |
| Swale | | |
| Catch Basin | | |
| Culvert End Section | | |
| Water Surface Indicator | | |
| Riprap | | |

# STANDARD SYMBOLS, ABBREVIATIONS AND PATTERNS

(Sheet 2 of 8)

STANDARD 000001-06

## EROSION & SEDIMENT CONTROL ITEMS

| | EX | PR |
|---|---|---|
| Cleaning & Grading Limits | | |
| Dike | | |
| Erosion Control Fence | | |
| Perimeter Erosion Barrier | | |
| Temporary Fence | | |
| Ditch Check Temporary | | |
| Ditch Check Permanent | | |
| Inlet & Pipe Protection | | |
| Sediment Basin | | |
| Erosion Control Blanket | | |
| Fabric Formed Concrete Revetment Mat | | |
| Turf Reinforcement Mat | | |
| Mulch Temporary | | |
| Mulch Method 1 | | |
| Mulch Method 2 Stabilized | | |
| Mulch Method 3 Hydraulic | | |

## NON–HIGHWAY IMPROVEMENT ITEMS

| | EX | PR |
|---|---|---|
| Noise Attn./Levee | | |
| Field Line | | |
| Fence | | |
| Base of Levee | | |
| Mailbox | | |
| Multiple Mailboxes | | |
| Pay Telephone | | |
| Advertising Sign | | |

## LANDSCAPING ITEMS

| | EX | PR |
|---|---|---|
| Contour Mounding Line | | |
| Fence | | |
| Fence Post | | |
| Shrubs | | |
| Mowline | | |
| Perennial Plants | | |
| Seeding Class 2 | | |
| Seeding Class 2A | | |
| Seeding Class 4 | | |
| Seeding Class 4 & 5 Combined | | |

## EXISTING LANDSCAPING ITEMS (contd.)

| | EX | PR |
|---|---|---|
| Seeding Class 5 | | |
| Seeding Class 7 | | |
| Seedlings Type 1 | | |
| Seedlings Type 2 | | |
| Sodding | | |
| Mowstake w/Sign | | |
| Tree Trunk Protection | | |
| Evergreen Tree | E | |
| Shade Tree | E | + |

## LIGHTING

| | EX | PR |
|---|---|---|
| Duct | | |
| Conduit | | |
| Electrical Aerial Cable | A | A |
| Electrical Buried Cable | L | L |
| Controller | | |
| Underpass Luminaire | | |
| Power Pole | | |

Illinois Department of Transportation

PASSED January 1, 2011

Michael Brand
ENGINEER OF POLICY AND PROCEDURES

APPROVED January 1, 2011

ENGINEER OF DESIGN AND ENVIRONMENT

ISSUED 1-1-97

# STANDARD SYMBOLS, ABBREVIATIONS AND PATTERNS

(Sheet 3 of 8)

STANDARD 000001–06

## LIGHTING (contd.)

| | EX | PR |
|---|---|---|
| Pull Point | | |
| Handhole | | |
| Heavy Duty Handhole | | |
| Junction Box | | |
| Light Unit Comb. | | |
| Electrical Ground | | |
| Traffic Flow Arrow | | |
| High Mast Pole (Half Size) | | |
| Light Unit-1 | | |

## PAVEMENT (MISC.)

| | EX | PR |
|---|---|---|
| Keyed Long. Joint | | |
| Keyed Long. Joint w/Tie Bars | | |
| Sawed Long. Joint w/Tie Bars | | |
| Bituminous Shoulder | | |
| Bituminous Taper | | |
| Stabilized Driveway | | |
| Widening | | |

## PAVEMENT MARKINGS

| | EX | PR |
|---|---|---|
| Bike Lane Symbol | | |
| Bike Lane Text | | BIKE LANE |
| Handicap Symbol | | |
| RR Crossing | | RR |
| Raised Marker Amber 1 Way | | |
| Raised Marker Amber 2 Way | | |
| Raised Marker Crystal 1 Way | | |
| Two Way Turn Left | | |
| Shoulder Diag. Pattern | | |
| Skip-Dash White | | |
| Skip-Dash Yellow | | |
| Stop Line | | |
| Solid Line | | |
| Double Centerline | | |
| Dotted Lines | | |
| CL 2Ln 2Way RRPM 12.2 m (40') o.c. | | |
| CL 2Ln 2Way RRPM 80' (24.4 m) o.c. | | |
| CL Multilane Div. RRPM 40' (12.2 m) o.c. | | |
| CL Multilane Div. RRPM 80' (24.4 m) o.c. | | |
| CL Multilane Div. Dbl. RRPM 80' (24.4 m) o.c. | | |
| CL Multilane Undiv. | | |
| Two Way Turn Left Line | | |

Illinois Department of Transportation

PASSED January 1, 2011
Michael Brand
ENGINEER OF POLICY AND PROCEDURES

APPROVED January 1, 2011
Scott E. Stokes
ENGINEER OF DESIGN AND ENVIRONMENT

ISSUED 1-1-97

# STANDARD SYMBOLS, ABBREVIATIONS AND PATTERNS

(Sheet 4 of 8)

STANDARD 000001–06

## PAVEMENT MARKINGS (contd.)

| | EX | PR |
|---|---|---|
| Urban Combination Left | | |
| Urban Combination Right | | |
| Urban Left Turn Arrow | | |
| Urban Right Turn Arrow | | |
| Urban Left Turn Only | | ONLY |
| Urban Right Turn Only | | ONLY |
| Urban Thru Only | | ONLY |
| Urban U-Turn | | |
| Urban Combined U-Turn | | |
| Rural Combination Left | | |
| Rural Combination Right | | |
| Rural Left Turn Arrow | | |
| Rural Right Turn Arrow | | |
| Rural Left Turn Only | | ONLY |
| Rural Right Turn Only | | ONLY |
| Rural Thru Only | | ONLY |

## RAILROAD ITEMS

| | EX | PR |
|---|---|---|
| Abandoned Railroad | | |
| Railroad | | |
| Railroad Point | | |
| Control Box | | |
| Crossing Gate | | |
| Flashing Signal | | |
| Railroad Cant. Mast Arm | | |
| Crossbuck | | |

## REMOVAL ITEMS

| | EX | PR |
|---|---|---|
| Removal Tic | | |
| Bituminous Removal | | |
| Hatch Pattern | | |
| Tree Removal Single | | |

## RIGHT OF WAY ITEMS

| | EX | PR |
|---|---|---|
| Future ROW Corner Monument | | |
| ROW Marker | | |
| ROW Line | | |
| Easement | | |
| Temporary Easement | | |

Illinois Department of Transportation

PASSED January 1, 2011

Michael Brand
ENGINEER OF POLICY AND PROCEDURES

APPROVED January 1, 2011

Scott E. Stokes
ENGINEER OF DESIGN AND ENVIRONMENT

ISSUED 1-1-97

# STANDARD SYMBOLS, ABBREVIATIONS AND PATTERNS

(Sheet 5 of 8)

STANDARD 000001–06

## RIGHT OF WAY ITEMS (contd.)

| | EX | PR |
|---|---|---|
| Access Control Line | AC | AC |
| Access Control Line & ROW | AC | AC |
| Access Control Line & ROW with Fence | AR | AC |
| Excess ROW Line | | XS |

## ROADWAY PLAN ITEMS

| | EX | PR |
|---|---|---|
| Cable Barrier | | |
| Concrete Barrier | | |
| Edge of Pavement | | |
| Bit Shoulders, Medians and C&G Line | | |
| Aggregate Shoulder | | |
| Sidewalks, Driveways | | |
| Guardrail | | |
| Guardrail Post | | |
| Traffic Sign | | |
| Corrugated Median | | |
| Impact Attenuator | | |
| North Arrow with District Office (Half Size) | N | |
| Match Line | | STA. 45+00 |
| Slope Limit Line | | |
| Typical Cross-Section Line | | |

## ROADWAY PROFILES

| | EX | PR |
|---|---|---|
| P.I. Indicator | | |
| Point Indicator | | |
| Earthworks Balance Point | | |
| Begin Point | | |
| Vert. Curve Data | VPI =<br>ELEV=<br>L =<br>E = | VPI =<br>ELEV=<br>L =<br>E = |
| Ditch Profile Left Side | | |
| Ditch Profile Right Side | | |
| Roadway Profile Line | | |
| Storm Sewer Profile Left Side | | |
| Storm Sewer Profile Right Side | | |

## SIGNING ITEMS

| | EX | PR |
|---|---|---|
| Cone, Drum or Barricade | | |
| Barricade Type II | | |
| Barricade Type III | | |
| Barricade With Edge Line | | |
| Flashing Light Sign | | |
| Panels I | | |
| Panels II | | |
| Direction of Traffic | | |
| Sign Flag (Half Size) | | |

## SIGNING ITEMS (contd.)

| | EX | PR |
|---|---|---|
| Reverse Left W1-4L (Half Size) | | |
| Reverse Right W1-4R (Half Size) | | |
| Two Way Traffic Sign W6-3 (Half Size) | | |
| Detour Ahead W20-2(0) (Half Size) | | DETOUR AHEAD |
| Left Lane Closed Ahead W20-5L(0) (Half Size) | | LEFT LANE CLOSED AHEAD |
| Right Lane Closed Ahead W20-5R(0) (Half Size) | | RIGHT LANE CLOSED AHEAD |
| Road Closed Ahead W20-3(0) (Half Size) | | ROAD CLOSED AHEAD |
| Road Construction Ahead W20-1-(0) (Half Size) | | ROAD CONSTRUCTION AHEAD |
| Single Lane Ahead (Half Size) | | SINGLE LANE AHEAD |
| Transition Left W4-2L (Half Size) | | |
| Transition Right W4-2R (Half Size) | | |

Illinois Department of Transportation

PASSED January 1, 2011
Michael Brand
ENGINEER OF POLICY AND PROCEDURES

APPROVED January 1, 2011
ENGINEER OF DESIGN AND ENVIRONMENT

ISSUED 1-1-97

# STANDARD SYMBOLS, ABBREVIATIONS AND PATTERNS

(Sheet 6 of 8)

STANDARD 000001–06

## SIGNING ITEMS (contd.)

| | EX | PR |
|---|---|---|
| One Way Arrow Lrg. W1-6-(0) (Half Size) | | |
| Two Way Arrow Large W1-7-(0) (Half Size) | | |
| Detour M4-10L-(0) (Half Size) | | DETOUR |
| Detour M4-10R-(0) (Half Size) | | DETOUR |
| One Way Left R6-1L (Half Size) | | ONE WAY |
| One Way Right R6-1R (Half Size) | | ONE WAY |
| Left Turn Lane R3-I100L (Half Size) | | LEFT TURN LANE |
| Keep Left R4-7AL (Half Size) | | KEEP LEFT |
| Keep Left R4-7BL (Half Size) | | KEEP LEFT |
| Keep Right R4-7AR (Half Size) | | KEEP RIGHT |
| Keep Right R4-7BR (Half Size) | | KEEP RIGHT |
| Stop Here On Red R10-6-AL (Half Size) | | STOP HERE ON RED |
| Stop Here On Red R10-6-AR (Half Size) | | STOP HERE ON RED |
| No Left Turn R3-2 (Half Size) | | |
| No Right Turn R3-1 (Half Size) | | |
| Road Closed R11-2 (Half Size) | | ROAD CLOSED |
| Road Closed Thru Traffic R11-2 (Half Size) | | ROAD CLOSED TO THRU TRAFFIC |

## STRUCTURES ITEMS

| | EX | PR |
|---|---|---|
| Box Culvert Barrel | | |
| Box Culvert Headwall | | |
| Bridge Pier | | |
| Bridge | | |
| Retaining Wall | | |
| Temporary Sheet Piling | | |

## TRAFFIC SHEET ITEMS

| | EX | PR |
|---|---|---|
| Cable Number | | |
| Left Turn Green | G | G |
| Left Turn Yellow | Y | Y |
| Signal Backplate | | |
| Signal Section 8" (200 mm) | | |
| Signal Section 12" (300 mm) | | |
| Walk/Don't Walk Letters | DW W | DW W |
| Walk/Don't Walk Symbols | | |

## TRAFFIC SIGNAL ITEMS

| | EX | PR |
|---|---|---|
| Galv. Steel Conduit | | |
| Underground Cable | | |
| Detector Loop Line | | |
| Detector Loop Large | | |
| Detector Loop Small | | |
| Detector Loop Quadrapole | | |

Illinois Department of Transportation

PASSED January 1, 2011

Michael Brand

ENGINEER OF POLICY AND PROCEDURES

APPROVED January 1, 2011

ENGINEER OF DESIGN AND ENVIRONMENT

ISSUED 1-1-97

# STANDARD SYMBOLS, ABBREVIATIONS AND PATTERNS

(Sheet 7 of 8)

STANDARD 000001–06

## TRAFFIC SIGNAL ITEMS (contd.)

| | EX | PR |
|---|---|---|
| Detector Raceway | "E" | |
| Aluminum Mast Arm | | |
| Steel Mast Arm | | |
| Veh. Detector Magnetic | | |
| Conduit Splice | | |
| Controller | | |
| Gulfbox Junction | | |
| Wood Pole | | |
| Temp. Signal Head | | |
| Handhole | | |
| Double Handhole | | |
| Heavy Duty Handhole | H | H |
| Junction Box | | |
| Ped. Pushbutton Detector | | |
| Ped. Signal Head | | |
| Power Pole Service | | |
| Priority Veh. Detector | | |
| Signal Head | | |
| Signal Head w/Backplate | | |
| Signal Post | | |
| Closed Circuit TV | C | C |
| Video Detector System | V | V |

Illinois Department of Transportation

PASSED January 1, 2011
Michael Brand
ENGINEER OF POLICY AND PROCEDURES

APPROVED January 1, 2011
ENGINEER OF DESIGN AND ENVIRONMENT

ISSUED 1-1-97

## UNDERGROUND UTILITY ITEMS

| | EX | PR | ABANDONED |
|---|---|---|---|
| Cable TV | CTV | CTV | CTV |
| Electric Cable | E | E | E |
| Fiber Optic | FO | FO | FO |
| Gas Pipe | G | G | G |
| Oil Pipe | O | O | O |
| Sanitary Sewer | | | |
| Telephone Cable | T | T | T |
| Water Pipe | W | W | W |

## UTILITIES ITEMS

| | EX | PR |
|---|---|---|
| Controller | | |
| Double Handhole | | |
| Fire Hydrant | | |
| GuyWire or Deadman Anchor | | |
| Handhole | | |
| Heavy Duty Handhole | H | H |
| Junction Box | | |
| Light Pole | | |
| Manhole | | |
| Pipeline Warning Sign | | |
| Power Pole | | |
| Power Pole with Light | | |
| Sanitary Sewer Cleanout | | |
| Splice Box Above Ground | | |
| Telephone Splice Box Above Ground | | |
| Telephone Pole | | |

## UTILITY ITEMS (contd.)

| | EX | PR |
|---|---|---|
| Traffic Signal | | |
| Traffic Signal Control Box | TS | |
| Water Meter | | |
| Water Meter Valve Box | | |
| Profile Line | | |
| Aerial Power Line | A A | A A |

## VEGETATION ITEMS

| | EX | PR |
|---|---|---|
| Deciduous Tree | | |
| Bush or Shrub | | |
| Evergreen Tree | | |
| Stump | | |
| Orchard/Nursery Line | | |
| Vegetation Line | | |
| Woods & Bush Line | | |

## WATER FEATURE ITEMS

| | EX | PR |
|---|---|---|
| Stream or Drainage Ditch | | |
| Waters Edge | | |
| Water Surface Indicator | | |
| Water Point | | |
| Disappearing Ditch | | |
| Marsh | | |
| Marsh/Swamp Boundary | | |

# STANDARD SYMBOLS, ABBREVIATIONS AND PATTERNS

(Sheet 8 of 8)

STANDARD 000001-06

## REINFORCEMENT BARS - ENGLISH (METRIC)

| Bar Size English (metric) | Dia. in. mm | Cross-Sectional Area sq. in. (sq. mm) | Weight lbs./ft. kg/m | SPACING, in. (mm) | | | | | | | | | | | | | |
|---|---|---|---|---|---|---|---|---|---|---|---|---|---|---|---|---|---|
| | | | | 4 (100) | 4½ (115) | 5 (125) | 5½ (140) | 6 (150) | 6½ (165) | 7 (175) | 7½ (190) | 8 (200) | 8½ (215) | 9 (225) | 10 (250) | 11 (275) | 12 (300) |
| | | | | AREA OF STEEL PER FOOT (METER), sq. in. (sq. mm) | | | | | | | | | | | | | |
| 3 (10) | 0.375 (9.5) | 0.110 (71) | 0.376 (0.560) | 0.330 (710) | 0.293 (617) | 0.264 (568) | 0.240 (507) | 0.220 (473) | 0.203 (430) | 0.189 (406) | 0.176 (374) | 0.165 (355) | 0.155 (330) | 0.147 (316) | 0.132 (284) | 0.120 (258) | 0.110 (237) |
| 4 (13) | 0.500 (12.7) | 0.196 (129) | 0.668 (0.944) | 0.588 (1290) | 0.523 (1122) | 0.470 (1032) | 0.428 (921) | 0.392 (860) | 0.362 (782) | 0.336 (737) | 0.314 (679) | 0.294 (645) | 0.277 (600) | 0.261 (573) | 0.235 (516) | 0.214 (469) | 0.196 (430) |
| 5 (16) | 0.625 (15.9) | 0.307 (199) | 1.043 (1.552) | 0.921 (1990) | 0.819 (1730) | 0.737 (1592) | 0.670 (1421) | 0.614 (1327) | 0.567 (1206) | 0.526 (1137) | 0.491 (1047) | 0.461 (995) | 0.433 (926) | 0.409 (884) | 0.368 (796) | 0.335 (724) | 0.307 (663) |
| 6 (19) | 0.750 (19.1) | 0.442 (284) | 1.502 (2.235) | 1.326 (2840) | 1.179 (2470) | 1.061 (2272) | 0.964 (2029) | 0.884 (1893) | 0.816 (1721) | 0.758 (1623) | 0.707 (1495) | 0.663 (1420) | 0.624 (1321) | 0.589 (1262) | 0.530 (1136) | 0.482 (1033) | 0.442 (947) |
| 7 (22) | 0.875 (22.2) | 0.601 (387) | 2.044 (3.042) | 1.803 (3870) | 1.603 (3365) | 1.442 (3096) | 1.311 (2764) | 1.202 (2580) | 1.110 (2345) | 1.030 (2211) | 0.962 (2037) | 0.902 (1935) | 0.848 (1800) | 0.801 (1720) | 0.721 (1548) | 0.656 (1407) | 0.601 (1290) |
| 8 (25) | 1.000 (25.4) | 0.785 (510) | 2.670 (3.973) | 2.355 (5100) | 2.093 (4435) | 1.884 (4080) | 1.713 (3543) | 1.570 (3400) | 1.449 (3091) | 1.346 (2914) | 1.256 (2684) | 1.178 (2550) | 1.108 (2372) | 1.047 (2267) | 0.942 (2040) | 0.856 (1855) | 0.785 (1700) |
| 9 (29) | 1.128 (28.7) | 1.000 (645) | 3.400 (5.060) | 3.000 (6450) | 2.667 (5609) | 2.400 (5160) | 2.182 (4607) | 2.000 (4300) | 1.846 (3909) | 1.714 (3686) | 1.600 (3395) | 1.500 (3225) | 1.412 (3000) | 1.333 (2867) | 1.200 (2580) | 1.091 (2345) | 1.000 (2150) |
| 10 (32) | 1.270 (32.3) | 1.267 (819) | 4.303 (6.404) | 3.801 (8190) | 3.379 (7122) | 3.041 (6552) | 2.764 (5850) | 2.534 (5460) | 2.339 (4964) | 2.172 (4680) | 2.027 (4311) | 1.901 (4095) | 1.789 (3809) | 1.689 (3640) | 1.520 (3276) | 1.382 (2978) | 1.267 (2730) |
| 11 (36) | 1.410 (35.8) | 1.561 (1006) | 5.313 (7.907) | 4.683 (10060) | 4.163 (8748) | 3.746 (8048) | 3.406 (7186) | 3.122 (6707) | 2.882 (6097) | 2.676 (5749) | 2.498 (5295) | 2.342 (5030) | 2.204 (4679) | 2.081 (4471) | 1.873 (4024) | 1.703 (3658) | 1.561 (3353) |

Illinois Department of Transportation

PASSED January 1, 2009
ENGINEER OF POLICY AND PROCEDURES
APPROVED January 1, 2009
ENGINEER OF DESIGN AND ENVIRONMENT

ISSUED 1-1-97

| DATE | REVISIONS |
|---|---|
| 1-1-09 | Switched units to English (metric). |
| 1-1-07 | Deleted metric table. Soft converted English table. |

# AREAS OF REINFORCEMENT BARS

**STANDARD 001001–02**

DECIMAL OF AN INCH AND OF A FOOT

| A | B | A | B | A | B | A | B | A | B | A | B |
|---|---|---|---|---|---|---|---|---|---|---|---|
| 0.0052 | 1/16 | 11/64 0.171875 | 2 1/16 | 0.3385 | 4 1/16 | 0.5052 | 6 1/16 | 43/64 0.671875 | 8 1/16 | 0.8385 | 10 1/16 |
| 0.0104 | 1/8 | 0.1771 | 2 1/8 | 11/32 0.34375 | 4 1/8 | 0.5104 | 6 1/8 | 0.6771 | 8 1/8 | 27/32 0.84375 | 10 1/8 |
| 1/64 0.015625 | 3/16 | 0.1823 | 2 3/16 | 0.3490 | 4 3/16 | 33/64 0.515625 | 6 3/16 | 0.6823 | 8 3/16 | 0.8490 | 10 3/16 |
| 0.0208 | 1/4 | 3/16 0.1875 | 2 1/4 | 0.3542 | 4 1/4 | 0.5208 | 6 1/4 | 11/16 0.6875 | 8 1/4 | 0.8542 | 10 1/4 |
| 0.0260 | 5/16 | 0.1927 | 2 5/16 | 23/64 0.359375 | 4 5/16 | 0.5260 | 6 5/16 | 0.6927 | 8 5/16 | 55/64 0.859375 | 10 5/16 |
| 1/32 0.03125 | 3/8 | 0.1979 | 2 3/8 | 0.3646 | 4 3/8 | 17/32 0.53125 | 6 3/8 | 0.6979 | 8 3/8 | 0.8646 | 10 3/8 |
| 0.0365 | 7/16 | 13/64 0.203125 | 2 7/16 | 0.3698 | 4 7/16 | 0.5365 | 6 7/16 | 45/64 0.703125 | 8 7/16 | 0.8698 | 10 7/16 |
| 0.0417 | 1/2 | 0.2083 | 2 1/2 | 3/8 0.3750 | 4 1/2 | 0.5417 | 6 1/2 | 0.7083 | 8 1/2 | 7/8 0.8750 | 10 1/2 |
| 3/64 0.046875 | 9/16 | 0.2135 | 2 9/16 | 0.3802 | 4 9/16 | 35/64 0.546875 | 6 9/16 | 0.7135 | 8 9/16 | 0.8802 | 10 9/16 |
| 0.0521 | 5/8 | 7/32 0.21875 | 2 5/8 | 0.3854 | 4 5/8 | 0.5521 | 6 5/8 | 23/32 0.71875 | 8 5/8 | 0.8854 | 10 5/8 |
| 0.0573 | 11/16 | 0.2240 | 2 11/16 | 25/64 0.390625 | 4 11/16 | 0.5573 | 6 11/16 | 0.7240 | 8 11/16 | 57/64 0.890625 | 10 11/16 |
| 1/16 0.0625 | 3/4 | 0.2292 | 2 3/4 | 0.3958 | 4 3/4 | 9/16 0.5625 | 6 3/4 | 0.7292 | 8 3/4 | 0.8958 | 10 3/4 |
| 0.0677 | 13/16 | 15/64 0.234375 | 2 13/16 | 0.4010 | 4 13/16 | 0.5677 | 6 13/16 | 47/64 0.734375 | 8 13/16 | 0.9010 | 10 13/16 |
| 0.0729 | 7/8 | 0.2396 | 2 7/8 | 13/32 0.40625 | 4 7/8 | 0.5729 | 6 7/8 | 0.7396 | 8 7/8 | 29/32 0.90625 | 10 7/8 |
| 5/64 0.078125 | 15/16 | 0.2448 | 2 15/16 | 0.4115 | 4 15/16 | 37/64 0.578125 | 6 15/16 | 0.7448 | 8 15/16 | 0.9115 | 10 15/16 |
| 0.0833 | 1 | 1/4 0.2500 | 3 | 0.4167 | 5 | 0.5833 | 7 | 3/4 0.7500 | 9 | 0.9167 | 11 |
| 0.0885 | 1 1/16 | 0.2552 | 3 1/16 | 27/64 0.421875 | 5 1/16 | 0.5885 | 7 1/16 | 0.7552 | 9 1/16 | 59/64 0.921875 | 11 1/16 |
| 3/32 0.09375 | 1 1/8 | 0.2604 | 3 1/8 | 0.4271 | 5 1/8 | 19/32 0.59375 | 7 1/8 | 0.7604 | 9 1/8 | 0.9271 | 11 1/8 |
| 0.0990 | 1 3/16 | 17/64 0.265625 | 3 3/16 | 0.4323 | 5 3/16 | 0.5990 | 7 3/16 | 49/64 0.765625 | 9 3/16 | 0.9323 | 11 3/16 |
| 0.1042 | 1 1/4 | 0.2708 | 3 1/4 | 7/16 0.4375 | 5 1/4 | 0.6042 | 7 1/4 | 0.7708 | 9 1/4 | 15/16 0.9375 | 11 1/4 |
| 7/64 0.109375 | 1 5/16 | 0.2760 | 3 5/16 | 0.4427 | 5 5/16 | 39/64 0.609375 | 7 5/16 | 0.7760 | 9 5/16 | 0.9427 | 11 5/16 |
| 0.1146 | 1 3/8 | 9/32 0.28125 | 3 3/8 | 0.4479 | 5 3/8 | 0.6146 | 7 3/8 | 25/32 0.78125 | 9 3/8 | 0.9479 | 11 3/8 |
| 0.1198 | 1 7/16 | 0.2865 | 3 7/16 | 29/64 0.453125 | 5 7/16 | 0.6198 | 7 7/16 | 0.7865 | 9 7/16 | 61/64 0.953125 | 11 7/16 |
| 1/8 0.1250 | 1 1/2 | 0.2917 | 3 1/2 | 0.4583 | 5 1/2 | 5/8 0.6250 | 7 1/2 | 0.7917 | 9 1/2 | 0.9583 | 11 1/2 |
| 0.1302 | 1 9/16 | 19/64 0.296875 | 3 9/16 | 0.4635 | 5 9/16 | 0.6302 | 7 9/16 | 51/64 0.796875 | 9 9/16 | 0.9635 | 11 9/16 |
| 0.1354 | 1 5/8 | 0.3021 | 3 5/8 | 15/32 0.46875 | 5 5/8 | 0.6354 | 7 5/8 | 0.8021 | 9 5/8 | 31/32 0.96875 | 11 5/8 |
| 9/64 0.140625 | 1 11/16 | 0.3073 | 3 11/16 | 0.4740 | 5 11/16 | 41/64 0.640625 | 7 11/16 | 0.8073 | 9 11/16 | 0.9740 | 11 11/16 |
| 0.1458 | 1 3/4 | 5/16 0.3125 | 3 3/4 | 0.4792 | 5 3/4 | 0.6458 | 7 3/4 | 13/16 0.8125 | 9 3/4 | 0.9792 | 11 3/4 |
| 0.1510 | 1 13/16 | 0.3177 | 3 13/16 | 31/64 0.484375 | 5 13/16 | 0.6510 | 7 13/16 | 0.8177 | 9 13/16 | 63/64 0.984375 | 11 13/16 |
| 5/32 0.15625 | 1 7/8 | 0.3229 | 3 7/8 | 0.4896 | 5 7/8 | 21/32 0.65625 | 7 7/8 | 0.8229 | 9 7/8 | 0.9896 | 11 7/8 |
| 0.1615 | 1 15/16 | 21/64 0.328125 | 3 15/16 | 0.4948 | 5 15/16 | 0.6615 | 7 15/16 | 53/64 0.828125 | 9 15/16 | 0.9948 | 11 15/16 |
| 0.1667 | 2 | 0.3333 | 4 | 1/2 0.5000 | 6 | 0.6667 | 8 | 0.8333 | 10 | 1 1.0000 | 12 |

A = Fractions of Inch or Foot

B = Inch Equivalents to Foot Fractions

Illinois Department of Transportation

PASSED January 1, 1997

ENGINEER OF POLICY AND PROCEDURES

APPROVED January 1, 1997

ENGINEER OF DESIGN AND ENVIRONMENT

ISSUED 1-1-97

| DATE | REVISIONS |
|---|---|
| 1-1-97 | New Standard. |

# DECIMAL OF AN INCH AND OF A FOOT

STANDARD 001006

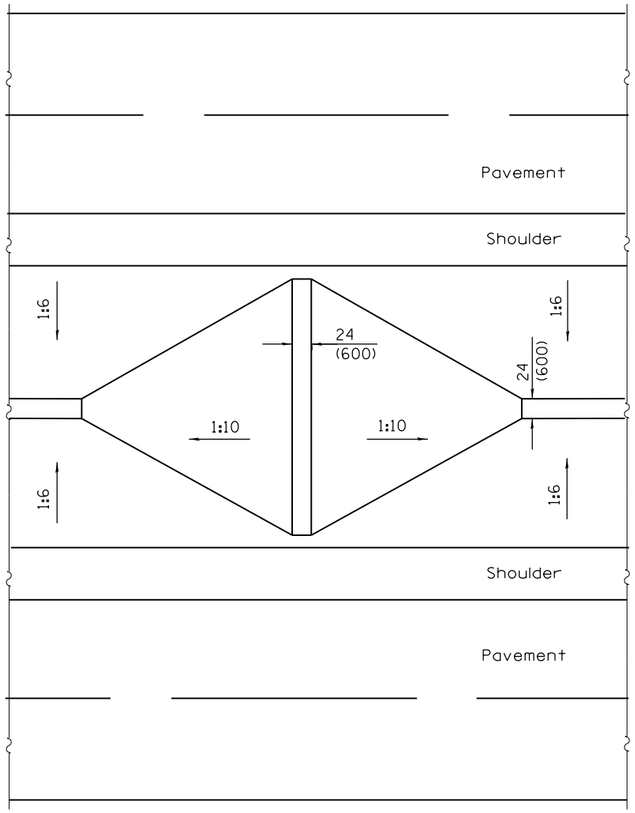


**DITCH CHECK FOR NARROW MEDIAN**

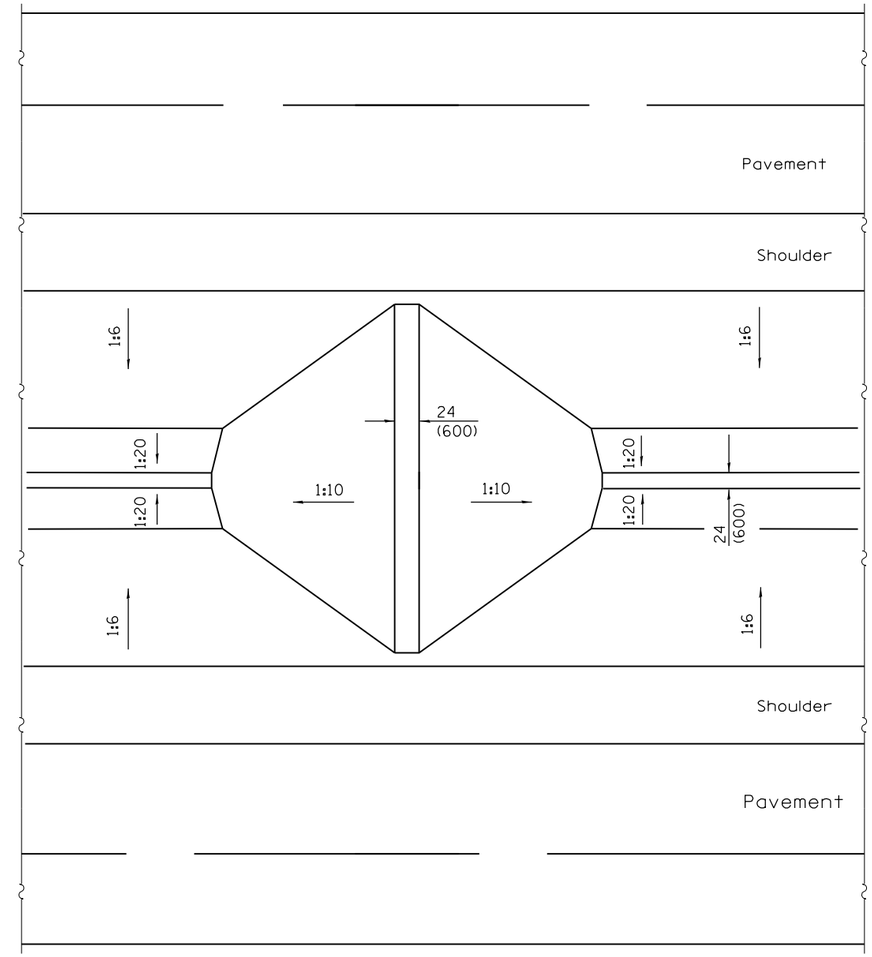


**DITCH CHECK FOR WIDE MEDIAN**

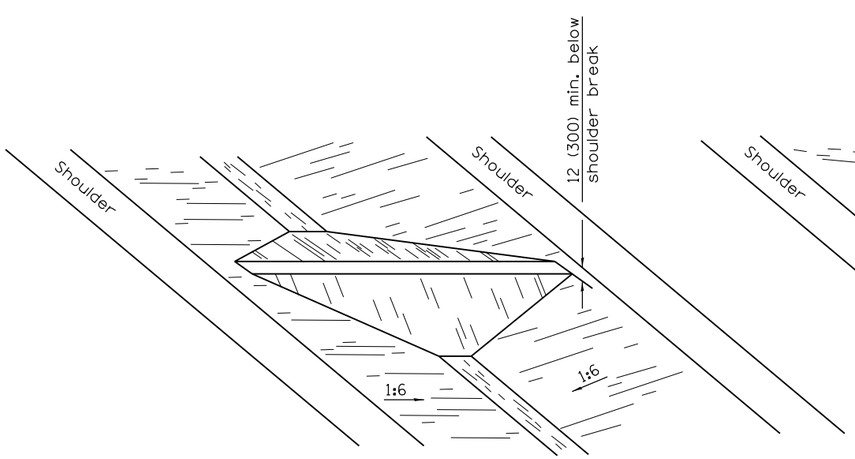


**VIEW OF NARROW MEDIAN**

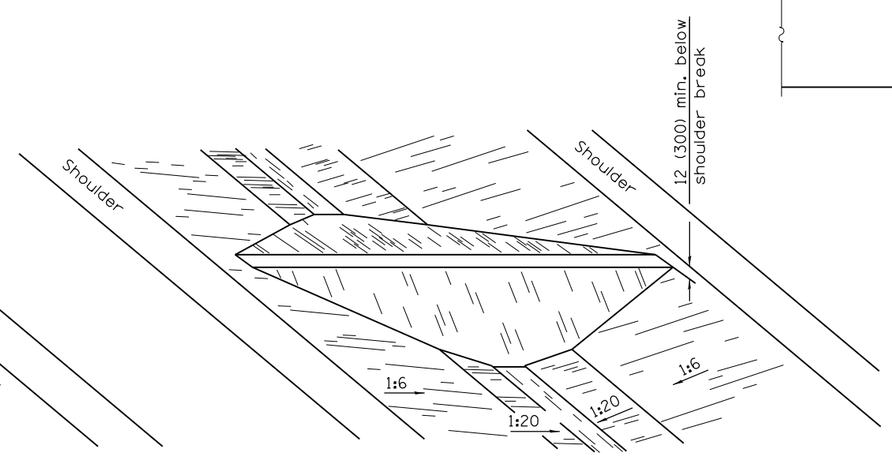


**VIEW OF WIDE MEDIAN**

## GENERAL NOTES

All slope ratios are expressed as units of vertical displacement to units of horizontal displacement (V:H).

All dimensions are in inches (millimeters) unless otherwise shown.

Illinois Department of Transportation

PASSED January 1, 2008
ENGINEER OF POLICY AND PROCEDURES
APPROVED January 1, 2008
ENGINEER OF DESIGN AND ENVIRONMENT

ISSUED 1-1-97

| DATE | REVISIONS |
|---|---|
| 1-1-08 | Switched units to |
| | English (metric). |
| | |
| 1-1-97 | Renum. Standard 2355-1. |
| | |
| | |

# EARTH MEDIAN DITCH CHECK

**STANDARD 202001-01**

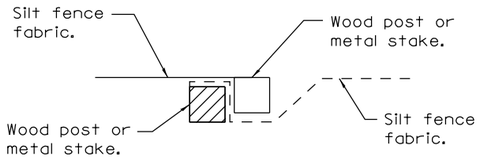


Place end-post (stake) of first silt fence adjacent to end-post (stake) of second silt fence with fabric positioned as swown.

**STEP 1**

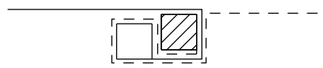

Rotate posts (stakes) together 180° clockwise and drive both posts (stakes) 18 (450) into ground.

**STEP 2**

**ATTACHING TWO SILT FILTER FENCES**

(Not applicable for J-hooks)

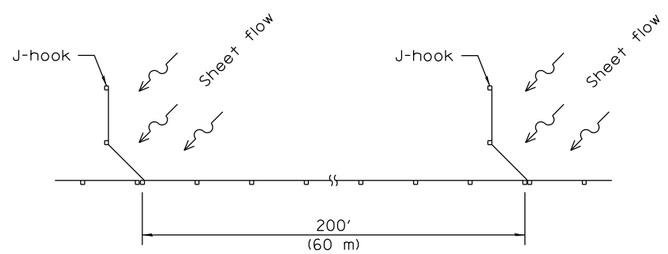


**SILT FILTER J-HOOK PLACEMENT**

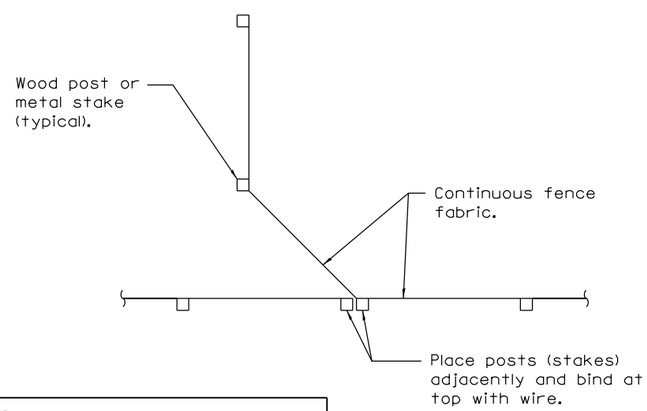


**J-HOOK**

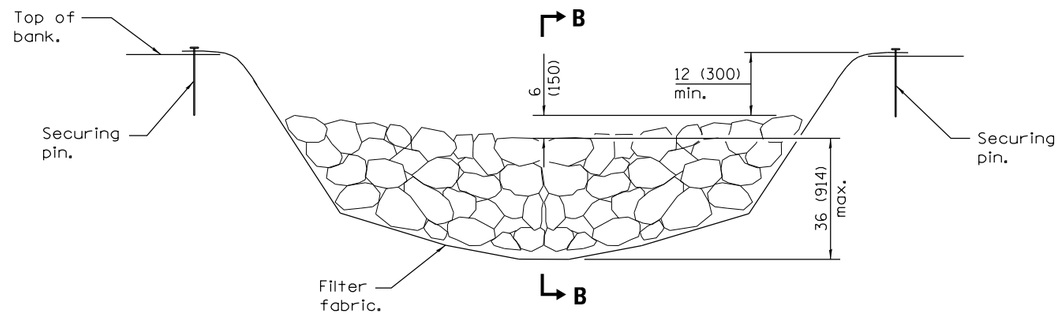


**ELEVATION**

- When the ditch check is within the clear zone and the road is open to traffic, the traffic approach slope of the aggregate shall be 1:4 (V:H).

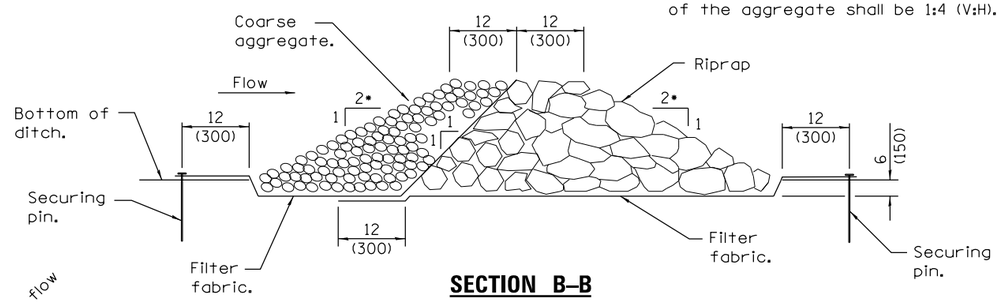


**SECTION B–B**

**AGGREGATE DITCH CHECK**

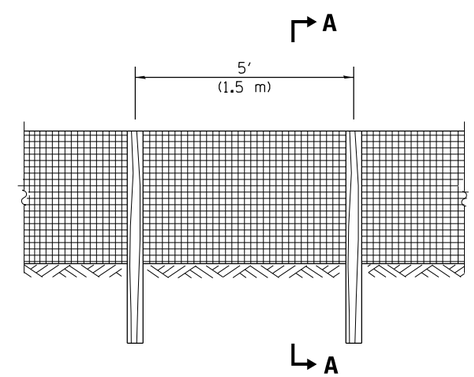


**ELEVATION**

**SILT FILTER FENCE AS A PERIMETER EROSION BARRIER**

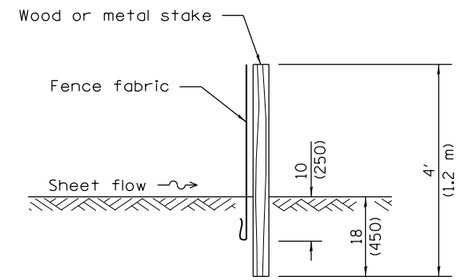


**SLICE METHOD**

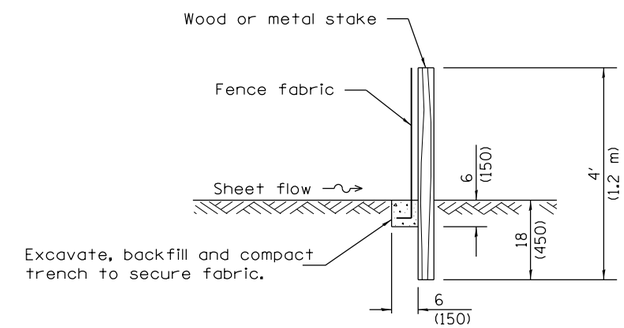


**TRENCH METHOD**

**SECTION A–A**

**GENERAL NOTES**

The installation details and dimensions shown for perimeter erosion barriers shall also apply for inlet and pipe protection.

All dimensions are in inches (millimeters) unless otherwise shown.

Illinois Department of Transportation

PASSED January 1, 2013
Michael Brand
ENGINEER OF POLICY AND PROCEDURES
APPROVED January 1, 2013
ENGINEER OF DESIGN AND ENVIRONMENT

ISSUED 1-1-97

| DATE | REVISIONS |
|---|---|
| 1-1-13 | Corrected notation for |
| | flowline (℄ ) on SEDIMENT |
| | BASIN ELEVATION. |
| 1-1-12 | Omitted hay/straw perimeter |
| | barrier. Added SLICE METHOD |
| | to SECTION A-A. |

# TEMPORARY EROSION CONTROL SYSTEMS

(Sheet 1 of 2)

**STANDARD 280001–07**

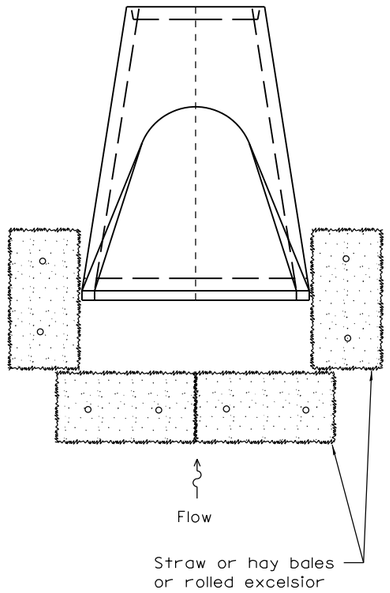


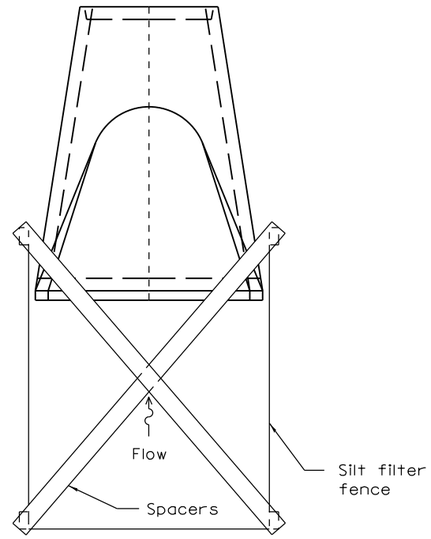


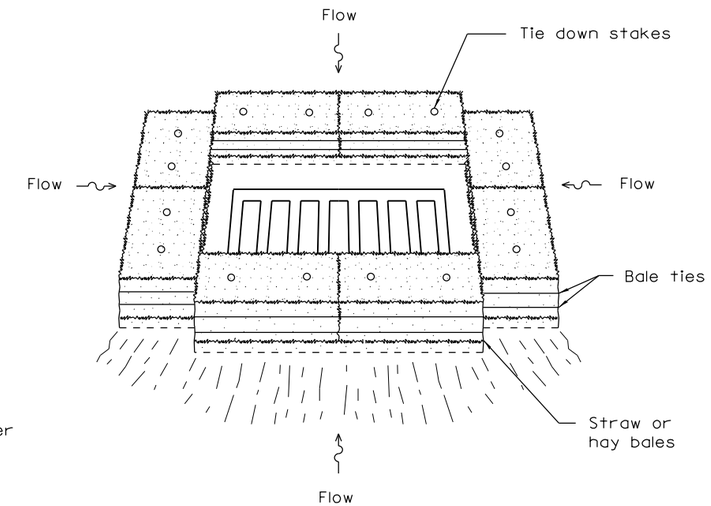


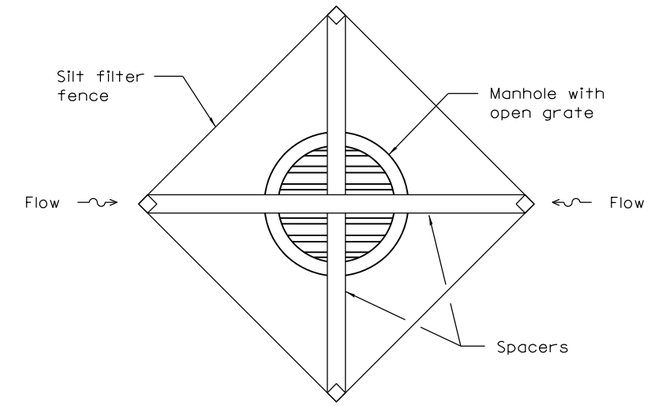


**INLET AND PIPE PROTECTION**

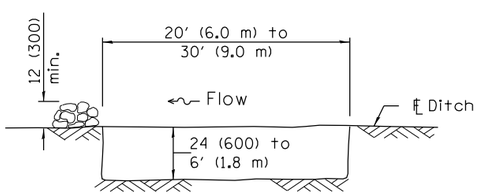


The performance of the basin will improve if put into a series.

**ELEVATION**

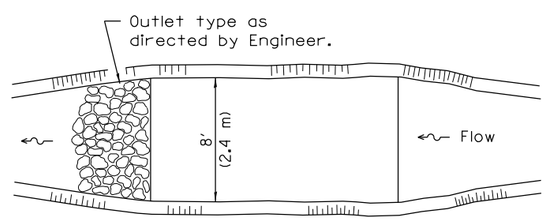


The long dimension should be parallel with the direction of the flow. Accumulated silt shall be removed anytime the basins become 75% filled.

**PLAN**

**SEDIMENT BASIN**

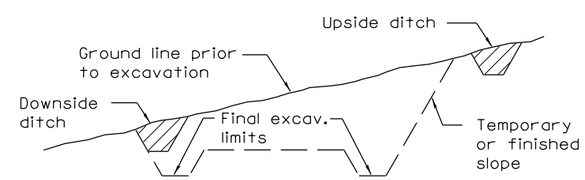


**TYPICAL CUT CROSS-SECTION**

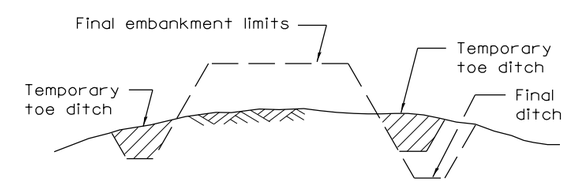


**TYPICAL FILL CROSS-SECTION**

**TEMPORARY DITCHES FOR CUT & FILL SECTIONS**

Illinois Department of Transportation

PASSED January 1, 2013

Michael Brand

ENGINEER OF POLICY AND PROCEDURES

APPROVED January 1, 2013

ENGINEER OF DESIGN AND ENVIRONMENT

ISSUED 1-1-97

# TEMPORARY EROSION CONTROL SYSTEMS

(Sheet 2 of 2)

**STANDARD 280001-07**

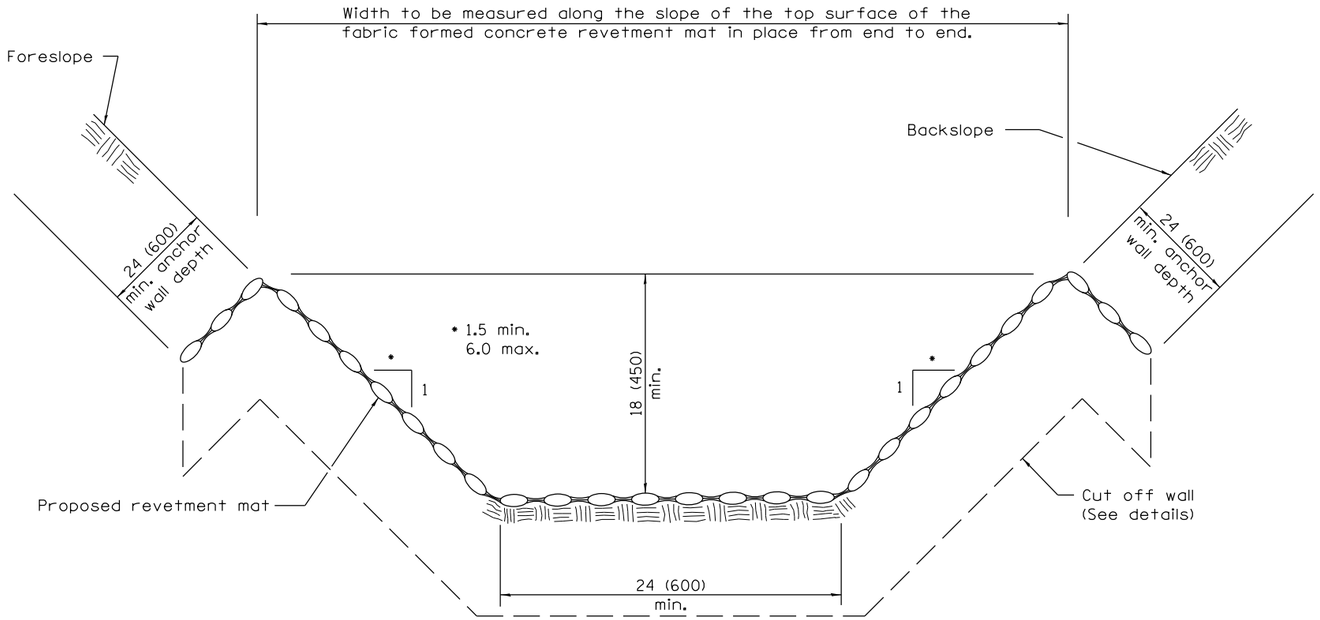


## TYPICAL FABRIC FORMED CONCRETE REVETMENT MAT LINED DITCH

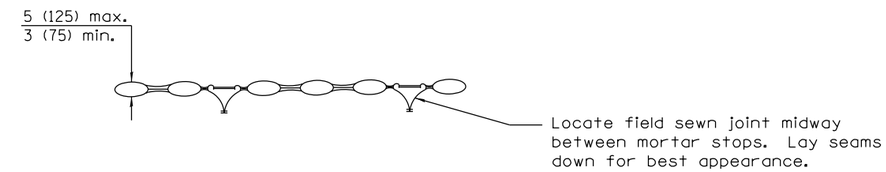


## TYPICAL SECTION THRU FILTER POINT MAT

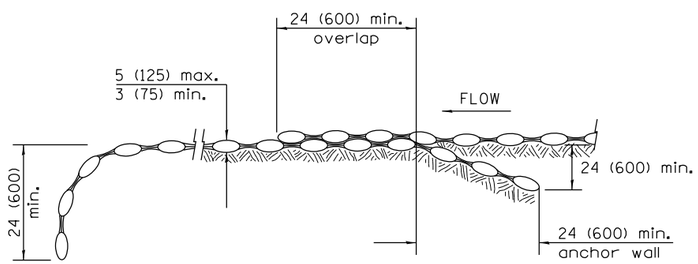


## CUT OFF WALL DETAILS

## TYPICAL LAP JOINTS W/ANCHOR WALL

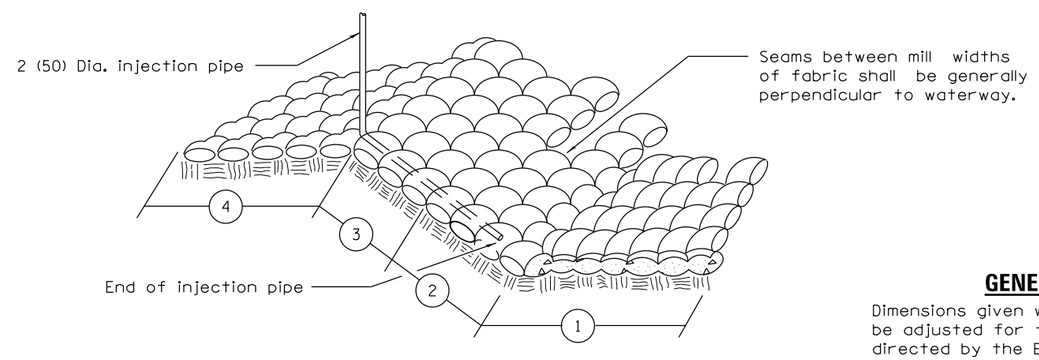


## INSTALLATION DETAILS

1. In placing inserts through fabric use care to avoid breaking drop stitches.
2. —(1)— Indicates sequence of pour.

## GENERAL NOTES

Dimensions given with minimum limits shall be adjusted for field conditions as directed by the Engineer.

All anchor walls on side slopes and at lap joints, as well as cut off walls, shall be installed in trenches.

Cut off walls shall be installed at the upstream and downstream ends.

All dimensions are in inches (millimeters) unless otherwise shown.

Illinois Department of Transportation

PASSED January 1, 2008
ENGINEER OF POLICY AND PROCEDURES
APPROVED January 1, 2008
ENGINEER OF DESIGN AND ENVIRONMENT

ISSUED 1-1-97

| DATE | REVISIONS |
|---|---|
| 1-1-08 | Switched units to |
| | English (metric). |
| | |
| 1-1-02 | Revised second note. |
| | |
| | |

# FABRIC FORMED CONCRETE REVETMENT MATS

STANDARD 285001–02

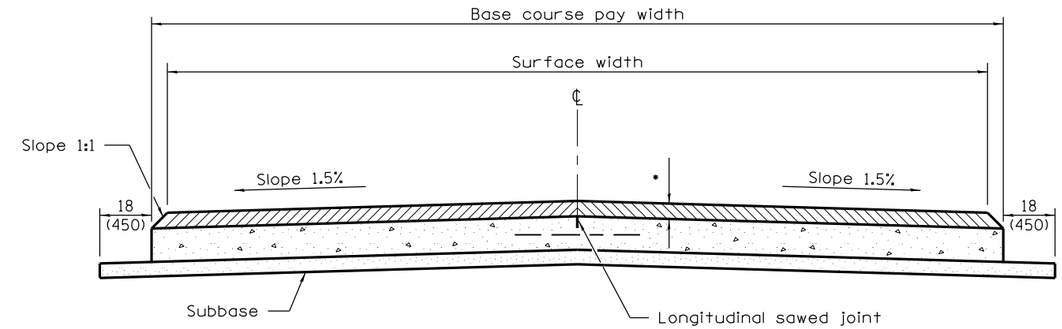


• HMA binder and surface courses

**SECTION A–A**

(TYPICAL 2 LANE WITH SHOULDERS)

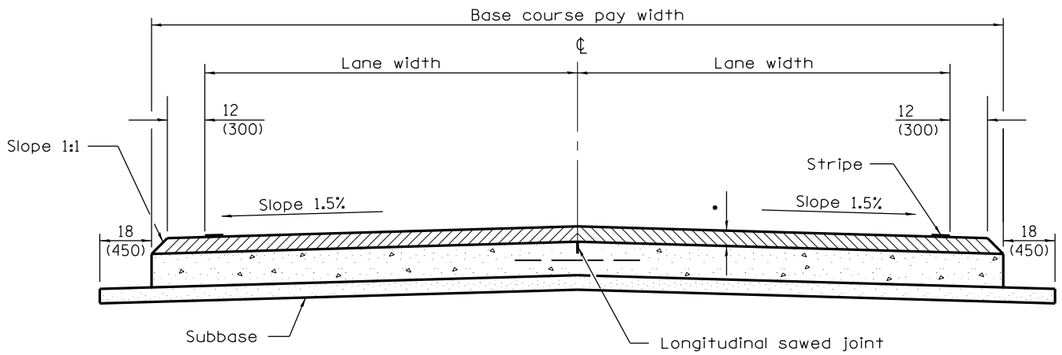


**ALTERNATE SECTION A–A**

(TYPICAL 2 LANE WITH SHOULDERS)

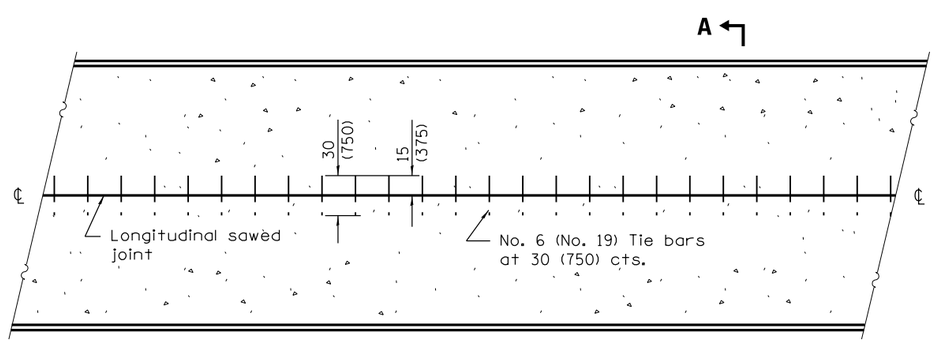


**PLAN**

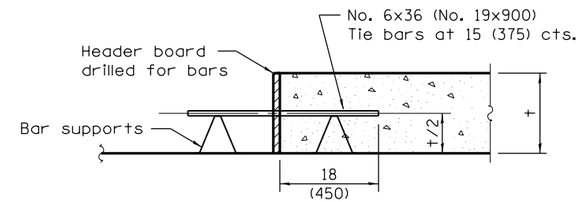


**TRANSVERSE CONSTRUCTION JOINT**

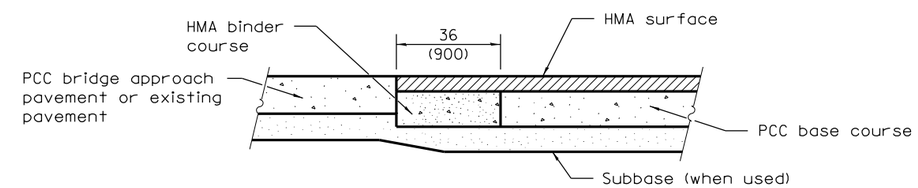


**LONGITUDINAL SECTION SHOWING CONSTRUCTION ADJACENT TO PCC BRIDGE APPROACH PAVEMENT OR EXISTING PAVEMENT**

## GENERAL NOTES

The longitudinal sawed joint shall be as detailed on Standard 420001 except the sawed groove does not require sealing.

All dimensions are in inches (millimeters) unless otherwise shown.

Illinois Department of Transportation

PASSED January 1, 2008
ENGINEER OF POLICY AND PROCEDURES

APPROVED January 1, 2008
ENGINEER OF DESIGN AND ENVIRONMENT

ISSUED 1-1-97

| DATE | REVISIONS |
|---|---|
| 1-1-08 | Switched units to |
| | English (metric). |
| | |
| 1-1-07 | Switched to Hot-Mix |
| | Asphalt (HMA) |
| | terminology. |

# PCC BASE COURSE WITH HMA BINDER AND SURFACE COURSES

**STANDARD 353001–04**

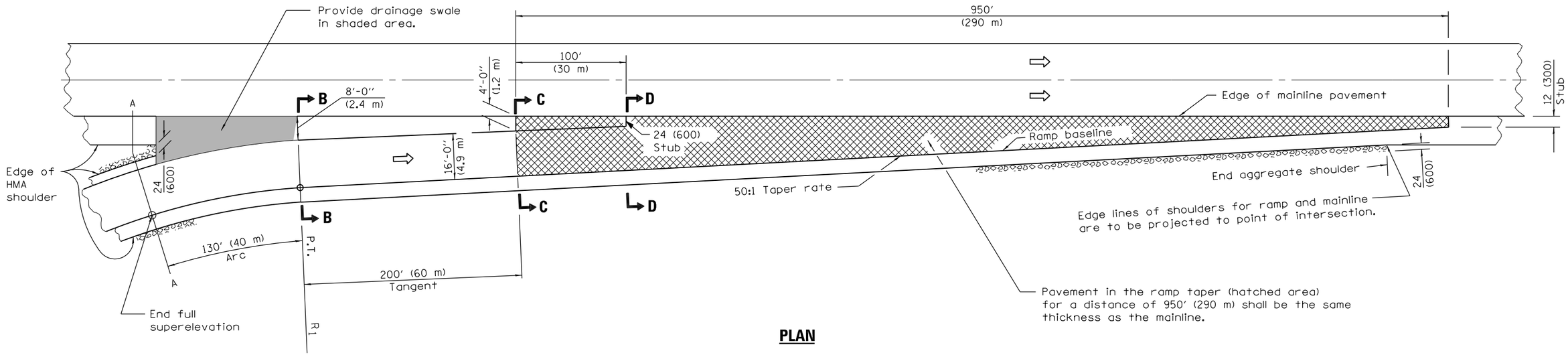


**PLAN**

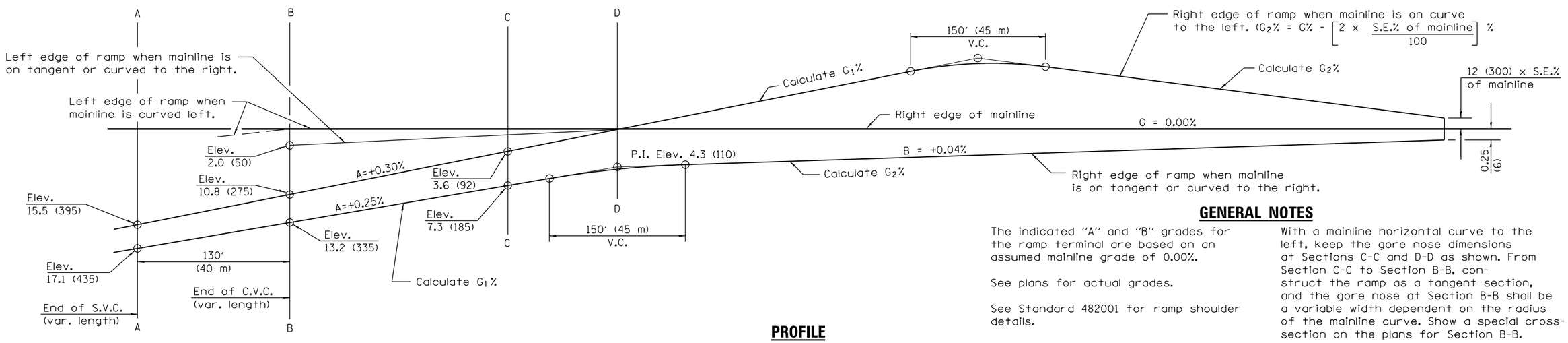


**PROFILE**

## GENERAL NOTES

The indicated "A" and "B" grades for the ramp terminal are based on an assumed mainline grade of 0.00%.

See plans for actual grades.

See Standard 482001 for ramp shoulder details.

Between Sections A-A and B-B (shaded area), provide a drainage swale and flush inlet to enhance drainage.

When using grades expressed in %, the grade value shall be divided by 100 to obtain vertical offsets.

When using a radius R1 less then the minimum, verify the required acceleration length will be provided.

With a mainline horizontal curve to the left, keep the gore nose dimensions at Sections C-C and D-D as shown. From Section C-C to Section B-B, construct the ramp as a tangent section, and the gore nose at Section B-B shall be a variable width dependent on the radius of the mainline curve. Show a special cross-section on the plans for Section B-B.

With a mainline horizontal curve to the right, keep the gore nose dimensions at Sections D-D, C-C, and B-B as shown, and the edge of the ramp between Sections C-C and B-B shall be constructed as a compound curve tying Section C-C.

All dimensions are in inches (millimeters) unless otherwise shown.

Illinois Department of Transportation

PASSED January 1, 2015
Michael Brand
ENGINEER OF POLICY AND PROCEDURES
APPROVED January 1, 2015
ENGINEER OF DESIGN AND ENVIRONMENT

ISSUED 1-1-97

| DATE | REVISIONS |
|---|---|
| 1-1-15 | Revised general note to |
| | be generic for R1. |
| | |
| 1-1-08 | Switched units to |
| | English (metric). |
| | Revised General Notes. |

# ENTRANCE RAMP TERMINAL

(FLEXIBLE RAMP PAVEMENT ADJACENT TO FLEXIBLE MAINLINE PAVEMENT)

(Sheet 1 of 2)

**STANDARD 406001–06**

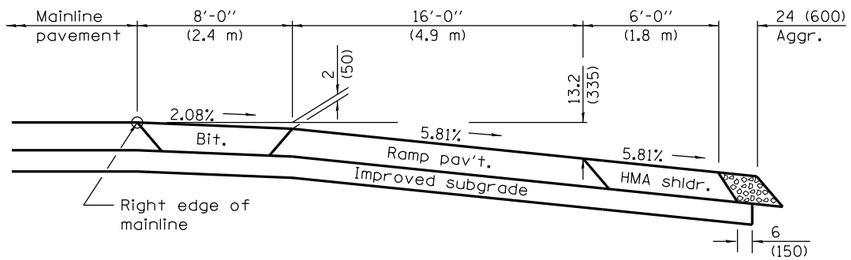


**SECTION B–B**

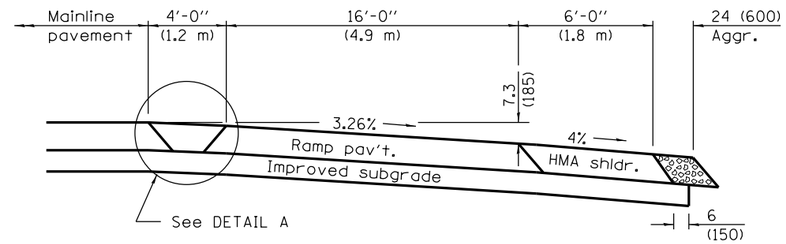


**SECTION C–C**

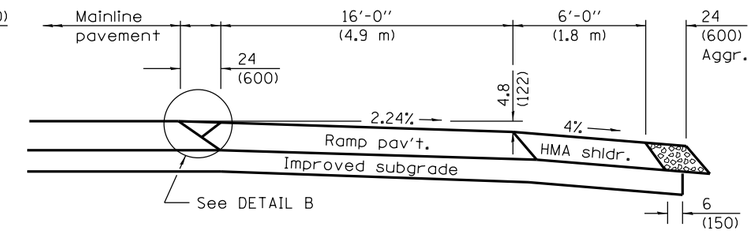


**SECTION D–D**

## CROSS SECTIONS WHEN MAINLINE IS ON TANGENT OR CURVED TO THE RIGHT

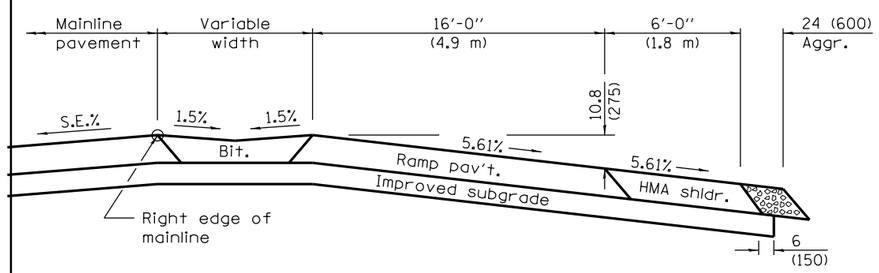


**SECTION B–B**

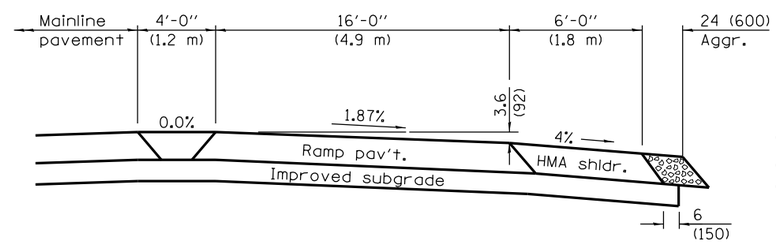


**SECTION C–C**

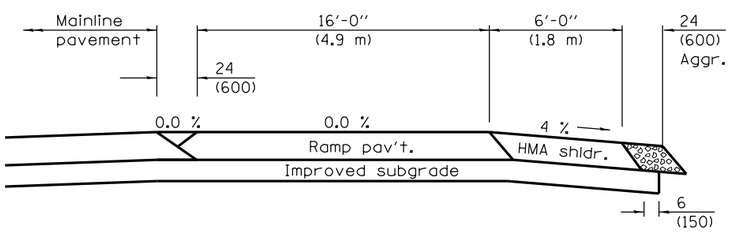


**SECTION D–D**

## CROSS SECTIONS WHEN MAINLINE IS CURVED TO THE LEFT

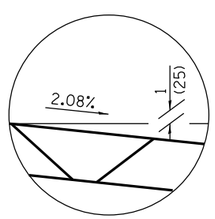


**DETAIL A**

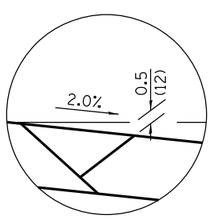


**DETAIL B**

Illinois Department of Transportation

PASSED January 1, 2015

Michael Brand
ENGINEER OF POLICY AND PROCEDURES

APPROVED January 1, 2015

ENGINEER OF DESIGN AND ENVIRONMENT

ISSUED 1-1-97

# ENTRANCE RAMP TERMINAL

(FLEXIBLE RAMP PAVEMENT ADJACENT TO FLEXIBLE MAINLINE PAVEMENT)

(Sheet 2 of 2)

**STANDARD 406001–06**

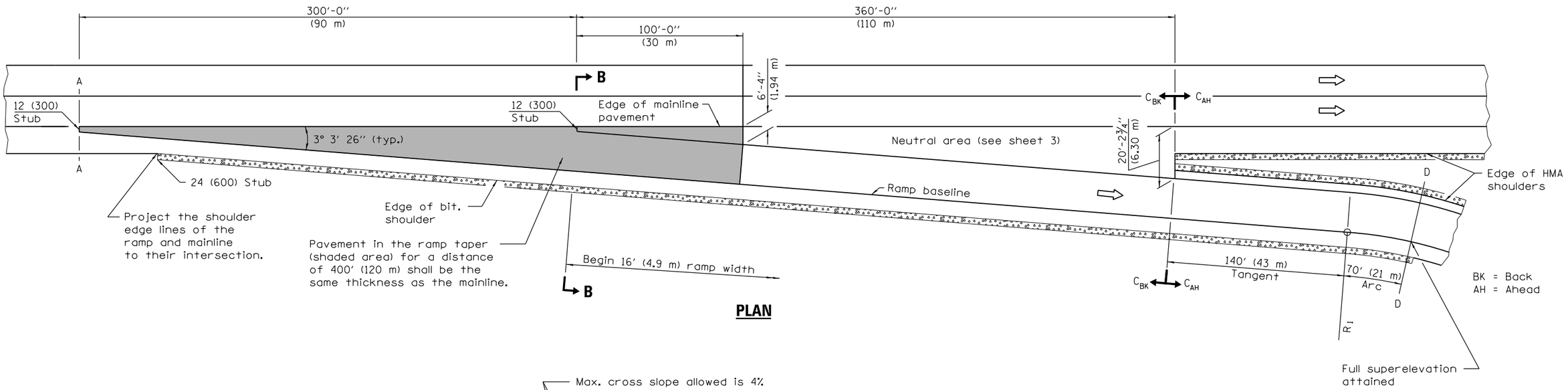


**PLAN**

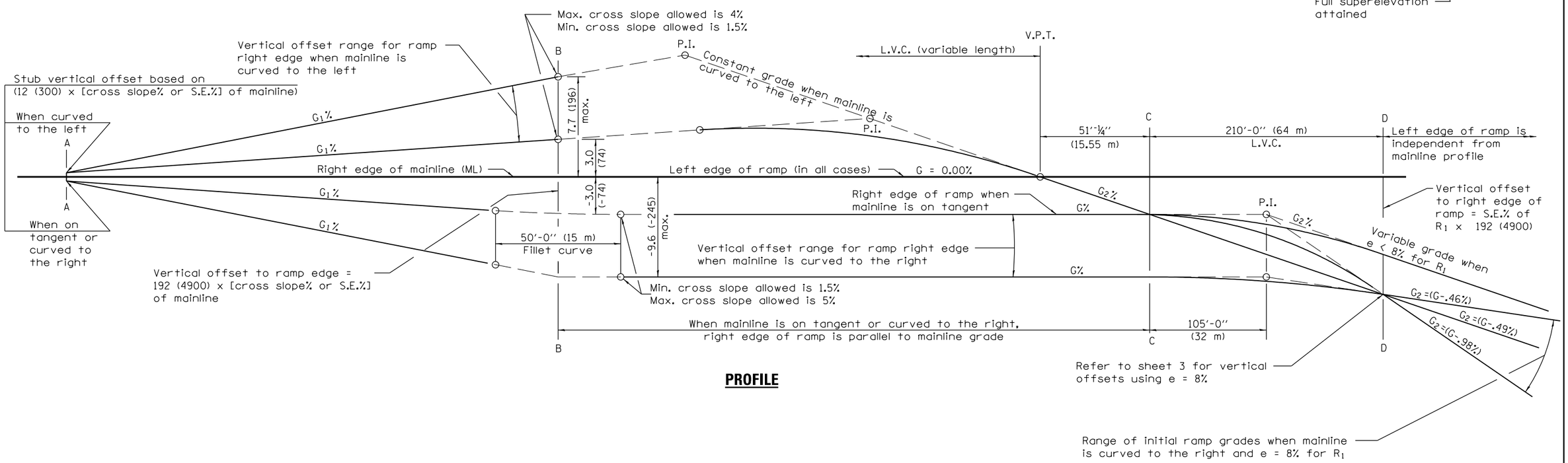


**PROFILE**

See Sheet 3 for GENERAL NOTES

Illinois Department of Transportation

PASSED January 1, 2015
Michael Brand
ENGINEER OF POLICY AND PROCEDURES
APPROVED January 1, 2015
ENGINEER OF DESIGN AND ENVIRONMENT

ISSUED 1-1-97

| DATE | REVISIONS |
|---|---|
| 1-1-15 | Corrected divergence angle |
| | at taper. Based profile off |
| | of e-max instead of R1. |
| 1-1-08 | Switched units to |
| | English (metric). |
| | |

# EXIT RAMP TERMINAL

(FLEXIBLE RAMP PAVEMENT ADJACENT TO FLEXIBLE MAINLINE PAVEMENT)

(Sheet 1 of 3)

**STANDARD 406101–05**

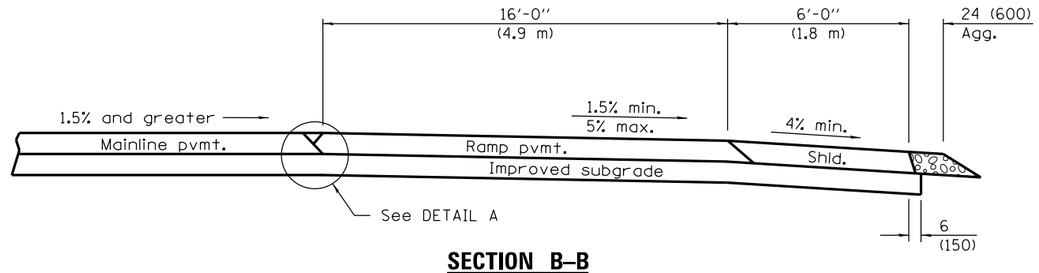


**SECTION B–B**

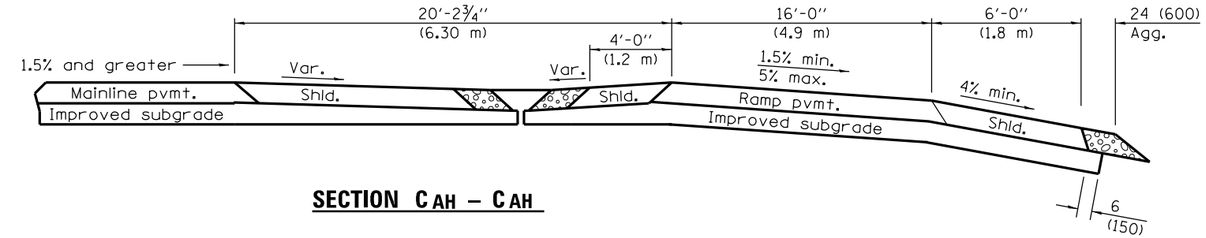


**SECTION $C_{AH}$ – $C_{AH}$**

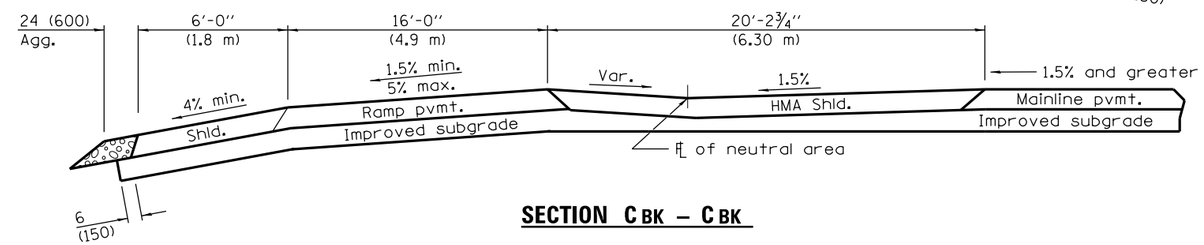


**SECTION $C_{BK}$ – $C_{BK}$**

BK = Back
AH = Ahead

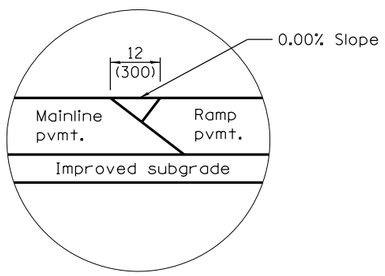


**DETAIL A**

**WHEN MAINLINE IS ON TANGENT OR CURVED TO THE RIGHT**

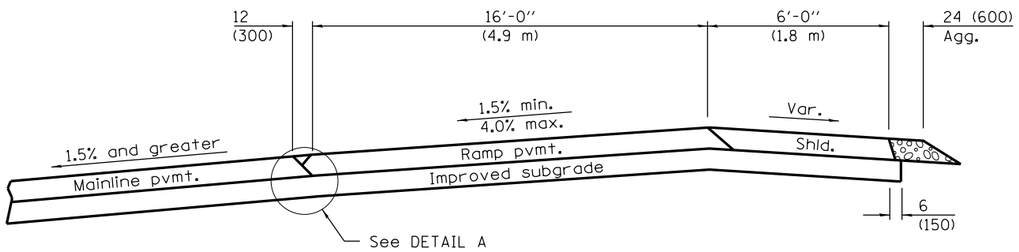


**SECTION B–B**

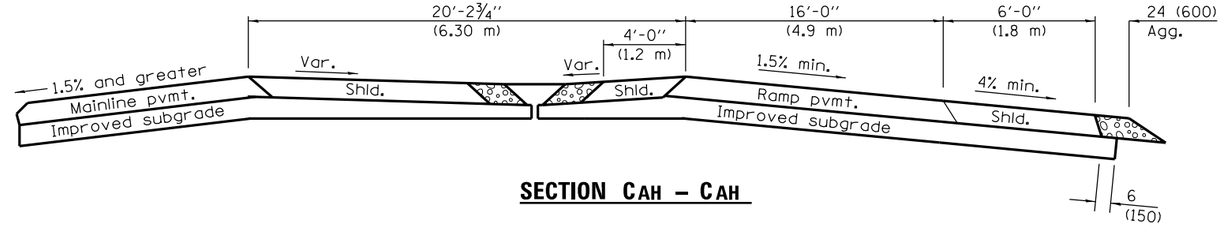


**SECTION $C_{AH}$ – $C_{AH}$**

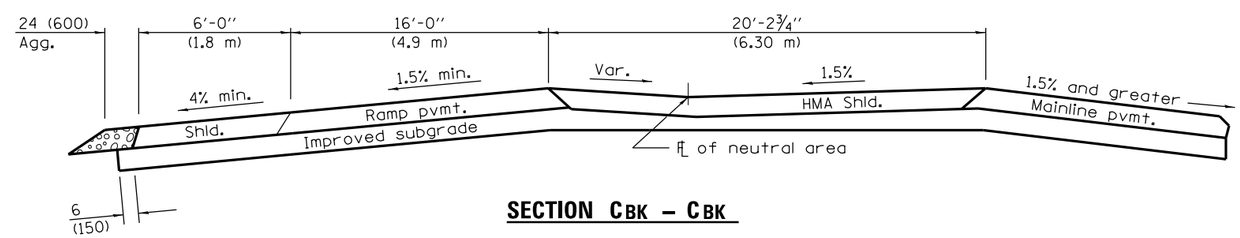


**SECTION $C_{BK}$ – $C_{BK}$**

**WHEN MAINLINE IS CURVED TO THE LEFT**

See Sheet 3 for GENERAL NOTES

Illinois Department of Transportation

PASSED January 1, 2015
Michael Brand
ENGINEER OF POLICY AND PROCEDURES
APPROVED January 1, 2015
ENGINEER OF DESIGN AND ENVIRONMENT

ISSUED 1-1-97

# EXIT RAMP TERMINAL

(FLEXIBLE RAMP PAVEMENT ADJACENT TO FLEXIBLE MAINLINE PAVEMENT)

(Sheet 2 of 3)

**STANDARD 406101–05**

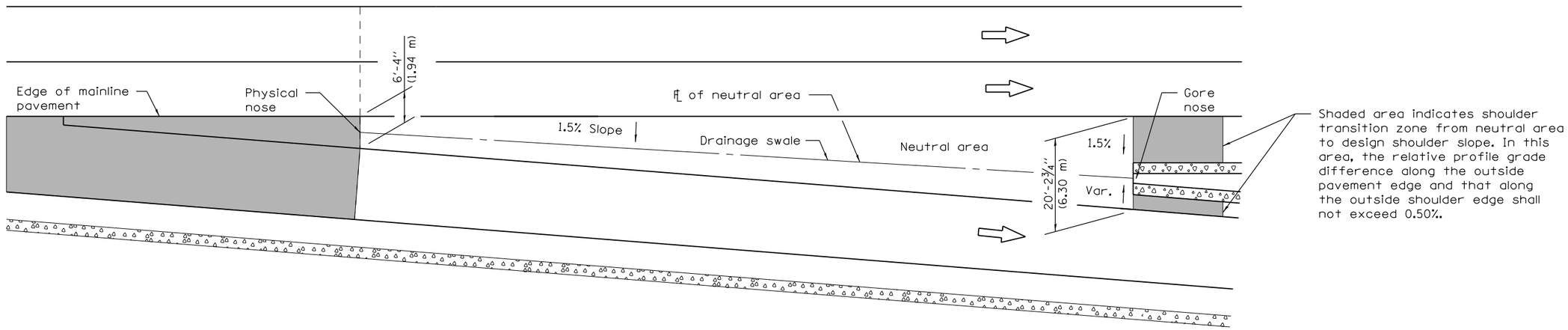


## DETAILS FOR DRAINAGE IN NEUTRAL AREA

| Vertical offsets in inches for right (1) edge of ramp, when e = 8% | | | |
|---|---|---|---|
| Sections | Mainline on Tangent | Mainline Curved Right | Mainline Curved Left |
| A | - 0.18 | S.E. % ML x 12 | S.E. % ML x 12 (2) |
| B | - 3.0 | S.E. % ML x 192 | S.E. % ML x 192 (2) |
| C | - 3.0 | S.E. % ML x 192 | - 3.0 |
| D | - 15.4 | - 15.4 | - 15.4 |

| (1) Vertical offsets in mm for right edge of ramp, when e = 8% | | | |
|---|---|---|---|
| Sections | Mainline on Tangent | Mainline Curved Right | Mainline Curved Left |
| A | - 5 | S.E.% ML x 300 | S.E.% ML x 300 (2) |
| B | - 74 | S.E.% ML x 4900 | S.E.% ML x 4900 (2) |
| C | - 74 | S.E. % ML x 4900 | - 74 |
| D | - 392 | - 392 | - 392 |

(1) Vertical offset values are calculated and based on the right edge of mainline pavement at 0.0 % grade.

(2) The vertical offsets of these points are above the mainline pavement and lie on an upgrade in relationship to the mainline grade.

(3) S.E.=Superelevation Rate

## GENERAL NOTES

The initial ramp grade ($G_2$) is based on the line generated through the PI that is 105 ft. (32 m) past Section C-C and the point created by the vertical offset at Section D-D.

See plans for actual grades.

See Standard 482001 for ramp shoulder details.

In the neutral area, provide a swale and flush inlet to enhance drainage.

When using grades expressed in %, the grade values shall be divided by 100 to obtain vertical offsets.

Where an exit ramp terminal is proposed adjacent to a mainline horizontal curve, construct the edge of the terminal by using offset widths, and for the terminal segment downstream from Section C-C to $R_1$, construct the ramp as a 140 ft. (43 m) tangent section.

All dimensions are in inches (millimeters) unless otherwise shown.

Illinois Department of Transportation

PASSED January 1, 2015
Michael Brand
ENGINEER OF POLICY AND PROCEDURES
APPROVED January 1, 2015
ENGINEER OF DESIGN AND ENVIRONMENT

ISSUED 1-1-97

# EXIT RAMP TERMINAL

(FLEXIBLE RAMP PAVEMENT ADJACENT TO FLEXIBLE MAINLINE PAVEMENT)

(Sheet 3 of 3)

**STANDARD 406101-05**

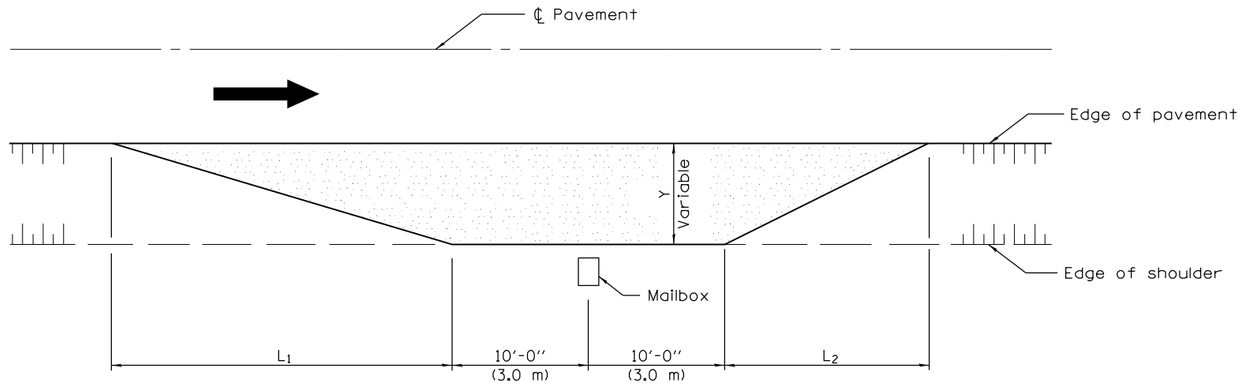


**TYPICAL APPLICATION**

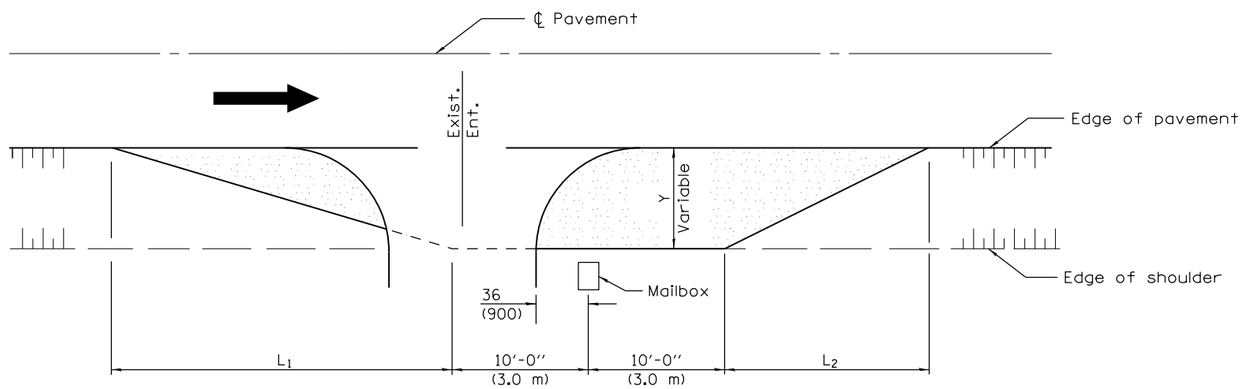


**MAILBOX ON FARSIDE OF ENTRANCE**

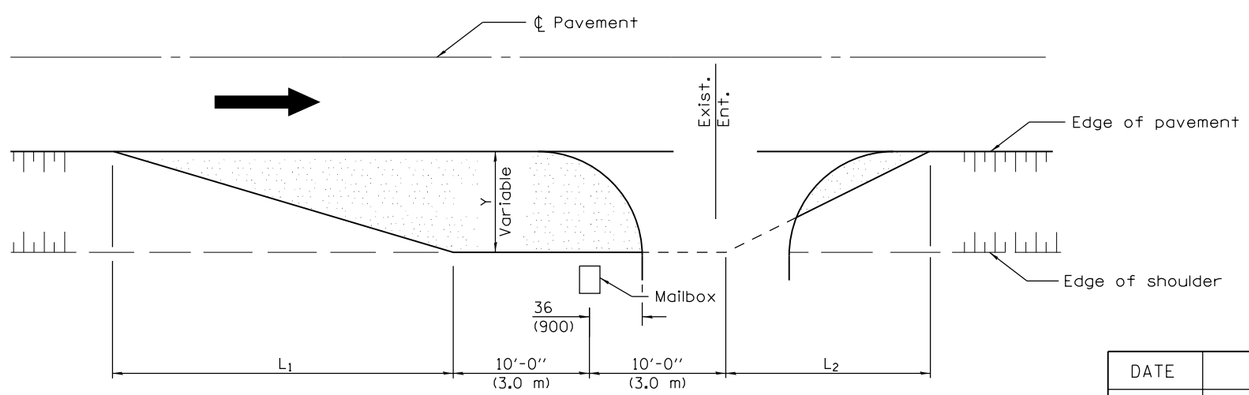


**MAILBOX ON NEARSIDE OF ENTRANCE**

| DIMENSIONS - ft. (m) | | |
|---|---|---|
| Width of Shoulder | 4-8 (1.2-2.4) | 10 (3.0) |
| Width of Turnout (Y) | 8 (2.4) | 8-10 (2.4-3.0) |
| $L_1$ | 32 (9.5) | 32 (9.5) |
| $L_2$ | 20 (6.0) | 20 (6.0) |

## GENERAL NOTES

Mailboxes shall be mounted such that the face of the mailbox is 6 (150) to 12 (300), and the post a minimum of 24 (600), from the edge of the turnout surfacing.

All dimensions are in inches (millimeters) unless otherwise shown.

Illinois Department of Transportation

PASSED January 1, 2008
ENGINEER OF POLICY AND PROCEDURES
APPROVED January 1, 2008
ENGINEER OF DESIGN AND ENVIRONMENT

ISSUED 1-1-97

| DATE | REVISIONS |
|---|---|
| 1-1-08 | Switched units to |
| | English (metric). |
| | |
| 1-1-97 | Renum. Standard 2171-1. |
| | Deleted note regarding |
| | Township & Dist. roads |

# MAILBOX TURNOUT

**STANDARD 406201-01**

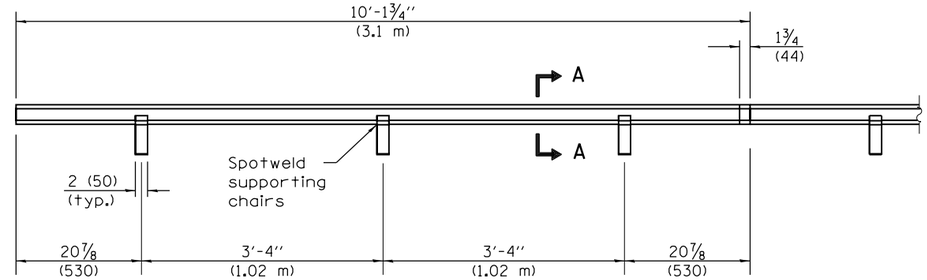


## TYPE C METAL JOINT

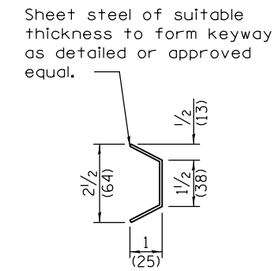


## SECTION A–A

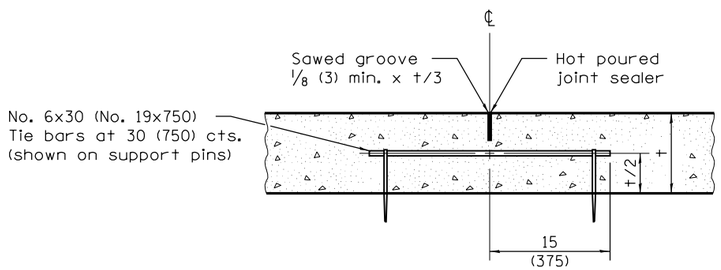


## LONGITUDINAL SAWED JOINT

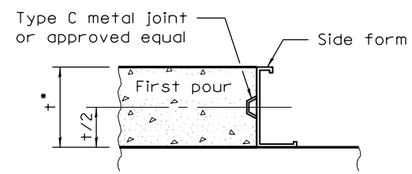


## LONGITUDINAL KEYED JOINT

* 8 (203) min. pavement thickness for keyed joints.

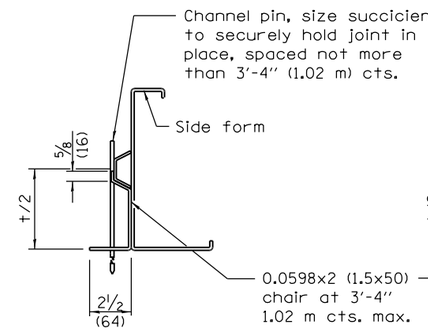


## SUPPORTING CHAIR ALTERNATE

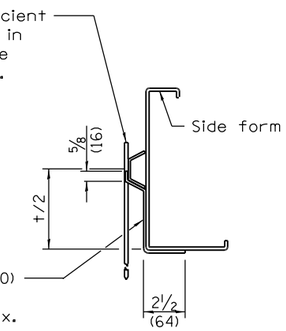


## SUPPORTING CHAIR ALTERNATE

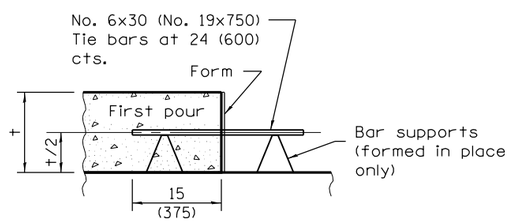


## LONGITUDINAL CONSTRUCTION JOINT

(TIE BAR FORMED IN PLACE OR MECHANICALLY INSERTED)

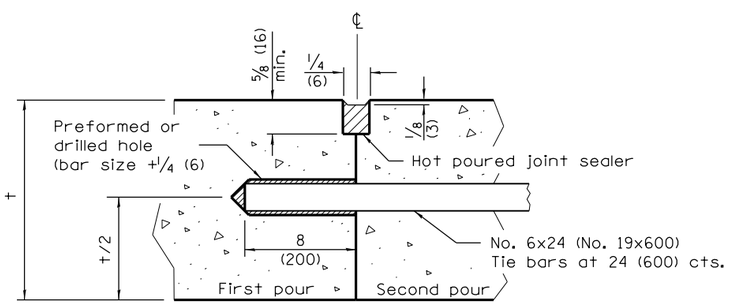


## LONGITUDINAL CONSTRUCTION JOINT

(TIE BAR GROUTED IN PLACE)

## GENERAL NOTES

All slope ratios are expressed as units of vertical displacement to units of horizontal displacement (V:H).

All dimensions are in inches (millimeters) unless otherwise shown.

Illinois Department of Transportation

PASSED January 1, 2015
Michael Brand
ENGINEER OF POLICY AND PROCEDURES
APPROVED January 1, 2015
ENGINEER OF DESIGN AND ENVIRONMENT

ISSUED 1-1-97

| DATE | REVISIONS |
|---|---|
| 1-1-15 | Added: opt. for mech. |
| | inserted tie bars, min. pvmt. |
| | thickness for keyed joints. |
| 1-1-08 | Switched units to |
| | English (metric). |
| | |

# PAVEMENT JOINTS

(Sheet 1 of 2)

STANDARD 420001–08

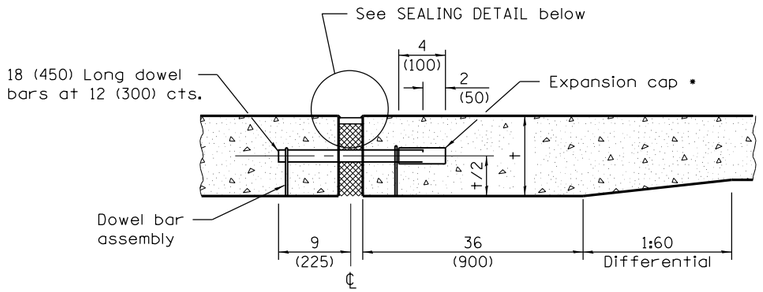


## TRANSVERSE EXPANSION JOINT

(FOR PAVEMENTS WITH UNEQUAL THICKNESS)

• Expansion caps shall be installed on the exposed end of each dowel bar once the header has been removed and the joint filler material has been installed.

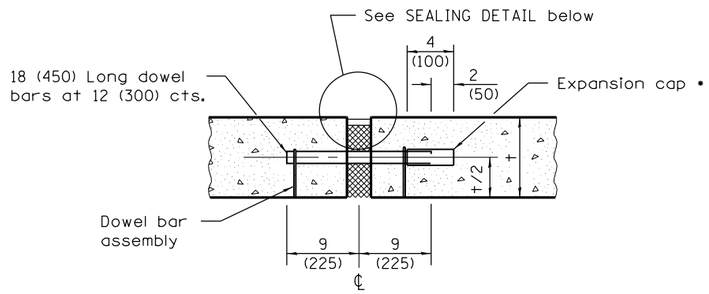


## TRANSVERSE EXPANSION JOINT

(FOR PAVEMENTS WITH EQUAL THICKNESS)

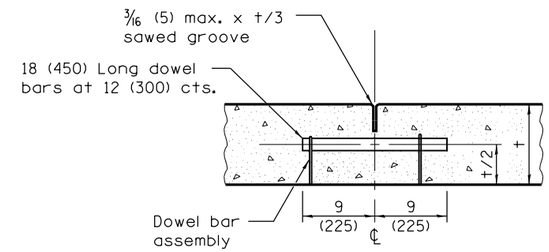


## TRANSVERSE CONTRACTION JOINT

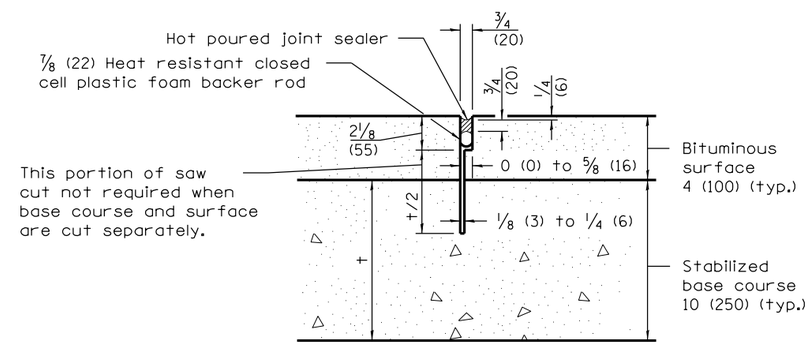


## TRANSVERSE CONTRACTION JOINT

(FOR CAM, CFA AND LFA BASE COURSE MIXTURES)

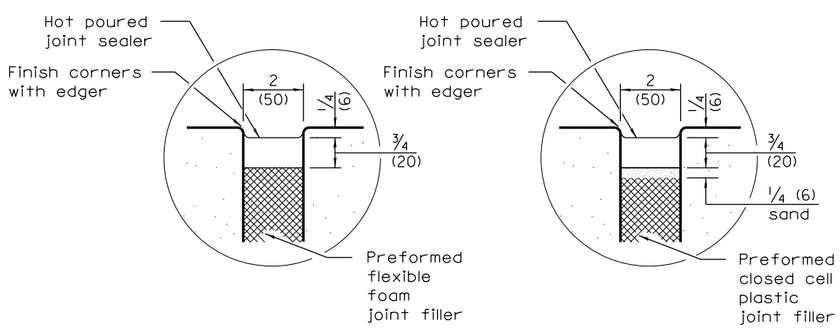


## SEALING DETAIL

| DOWEL BAR TABLE | |
|---|---|
| PAVEMENT THICKNESS | DOWEL BAR DIAMETER |
| 8 (200) or greater | 1 1/2 (38) |
| 7 (175) thru 7.99 (199) | 1 1/4 (32) |
| Less than 7 (175) | 1 (25) |

Illinois Department of Transportation

PASSED January 1, 2015

Michael Brand
ENGINEER OF POLICY AND PROCEDURES

APPROVED January 1, 2015

ENGINEER OF DESIGN AND ENVIRONMENT

ISSUED 1-1-97

# PAVEMENT JOINTS

(Sheet 2 of 2)

STANDARD 420001–08

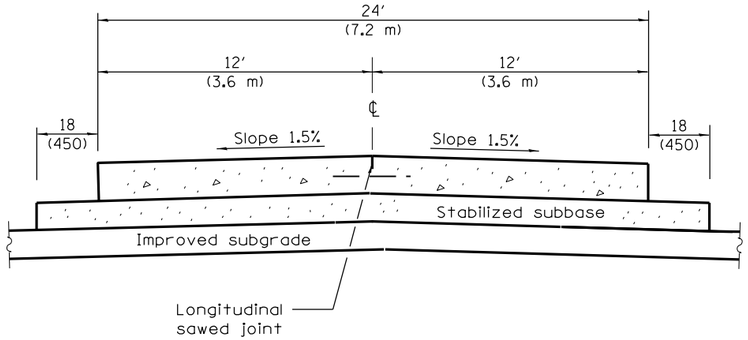


## SECTION A–A

(TYPICAL 2-LANE WITH SHOULDERS)

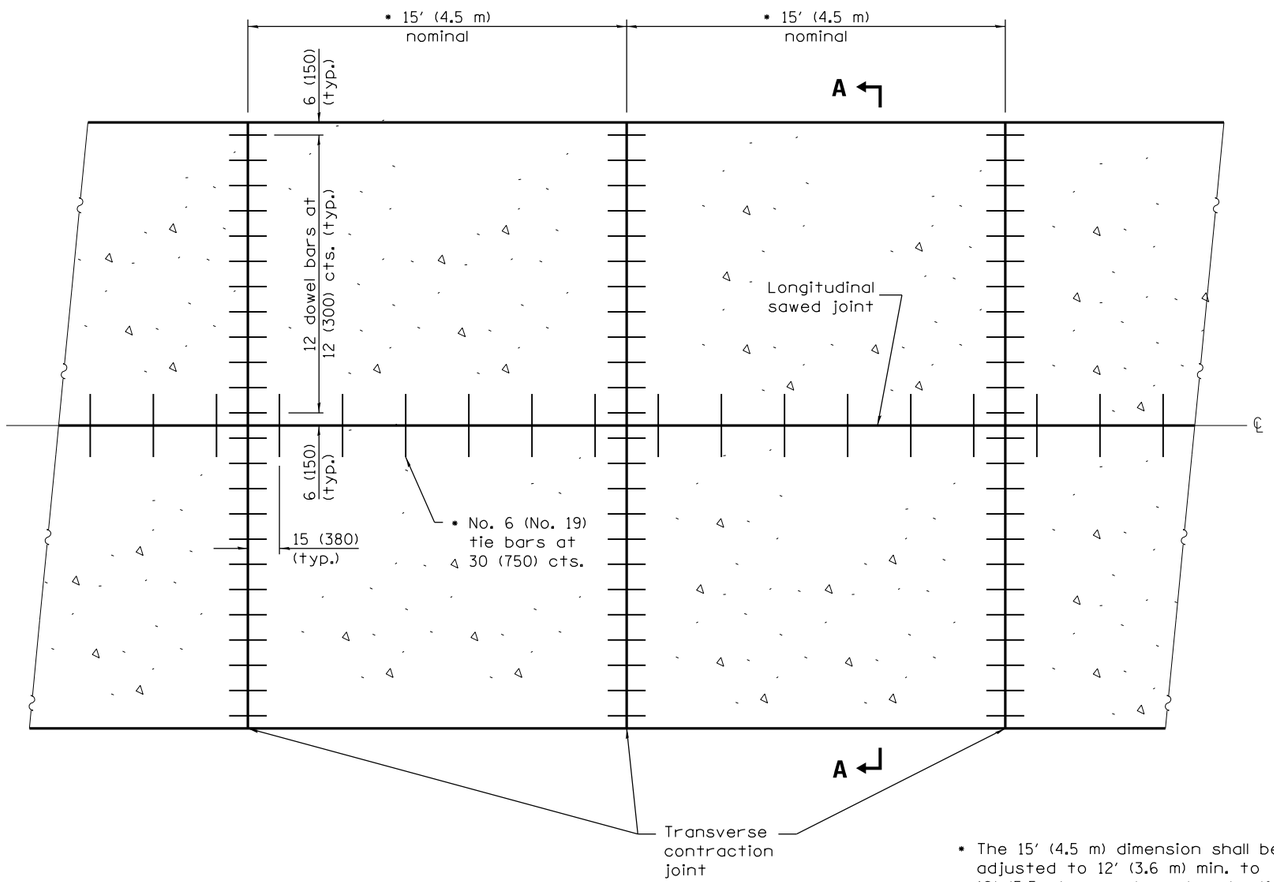


## PLAN

• The 15′ (4.5 m) dimension shall be adjusted to 12′ (3.6 m) min. to 18′ (5.5 m) max. when placed adjacent to existing pcc pavement structure so that the joints are in prolongation. Adjust the tie bar spacing to maintain a clearance of 6 (150) from dowel bars.

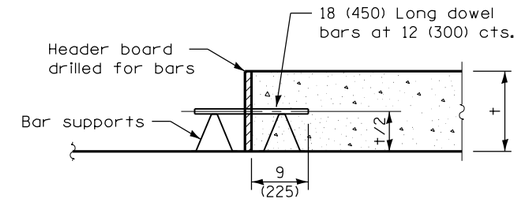


## TRANSVERSE CONSTRUCTION JOINT

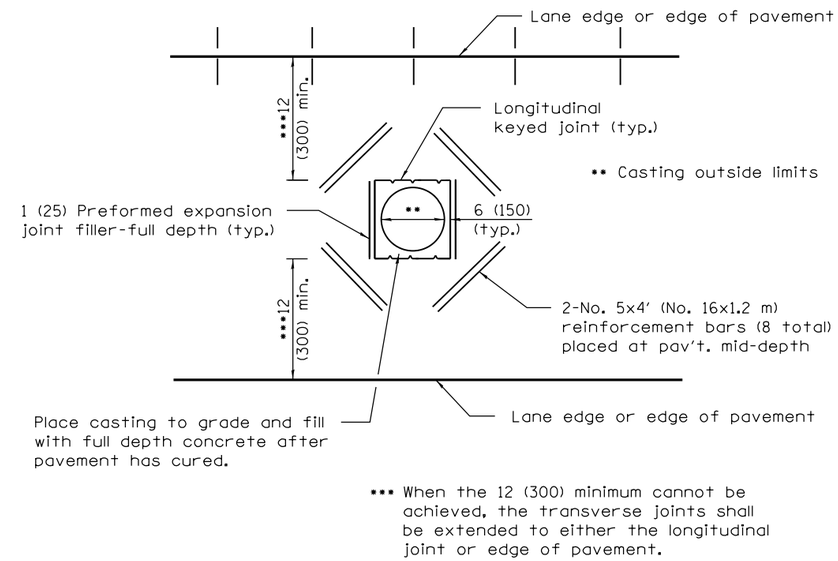


## DETAIL OF ADDED REINFORCEMENT FOR PAVEMENT BLOCKS-OUTS

## GENERAL NOTES

See Standard 420001 for details of joints not shown.

All dimensions are in inches (millimeters) unless otherwise shown.

Illinois Department of Transportation

PASSED January 1, 2015

Michael Brand
ENGINEER OF POLICY AND PROCEDURES

APPROVED January 1, 2015

ENGINEER OF DESIGN AND ENVIRONMENT

ISSUED 1-1-97

| DATE | REVISIONS |
|---|---|
| 1-1-15 | Added dimension of tie |
| | bars from transverse |
| | contraction joints |
| 1-1-08 | Switched units to |
| | English (metric). |
| | |

# 24′ (7.2 m) JOINTED PCC PAVEMENT

STANDARD 420101–05

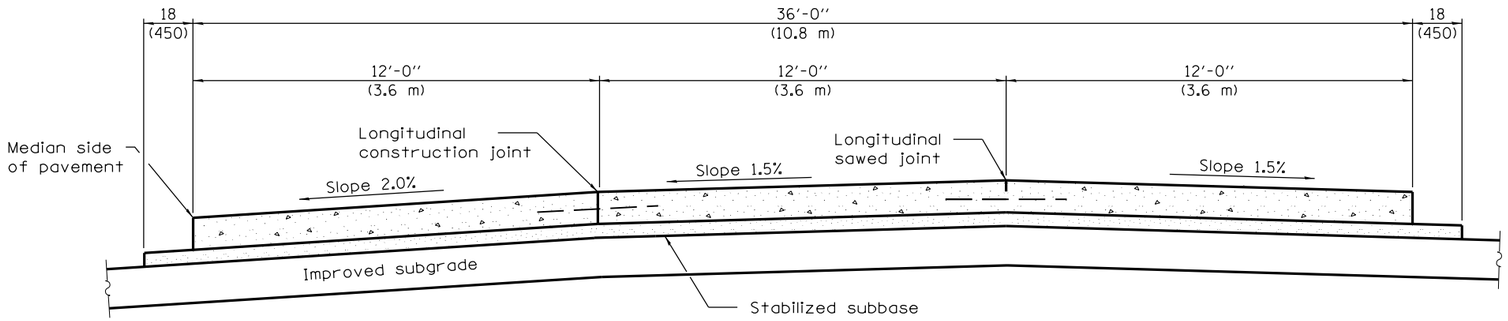


## SECTION A–A

(TYPICAL 3-LANE, 1-WAY WITH SHOULDERS)

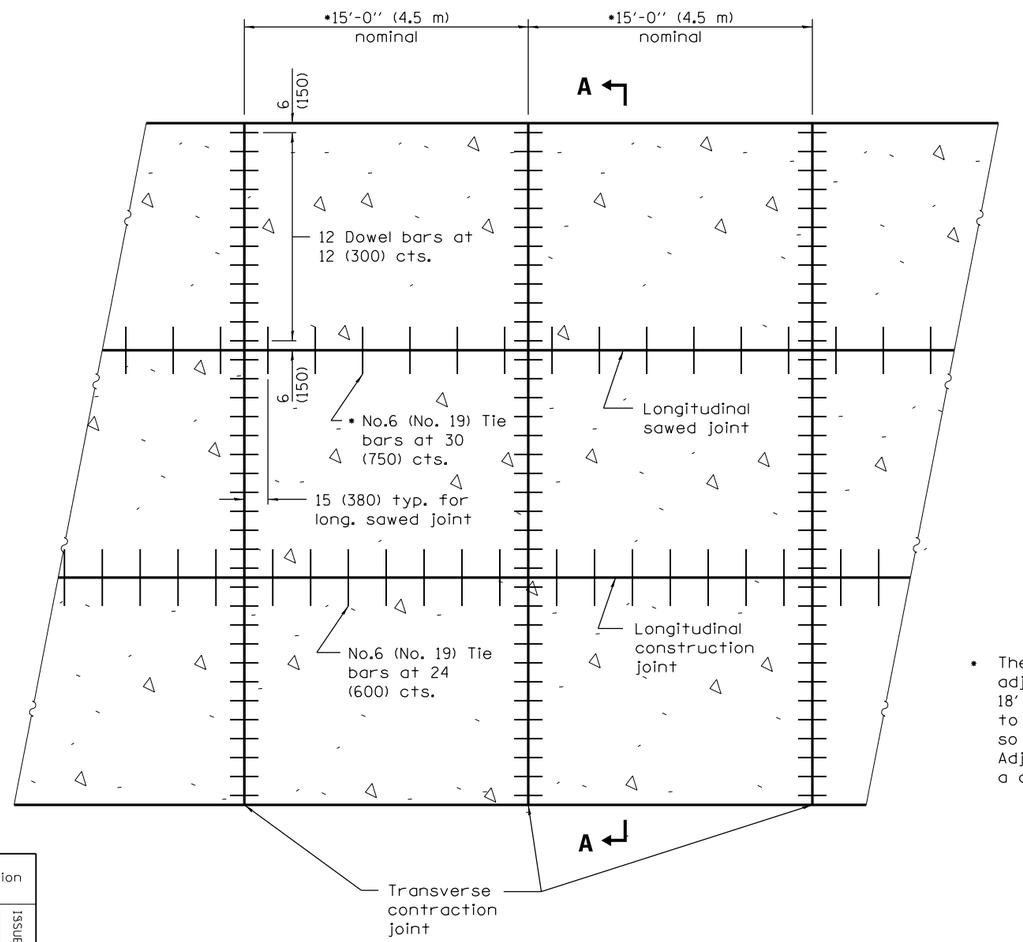


## PLAN

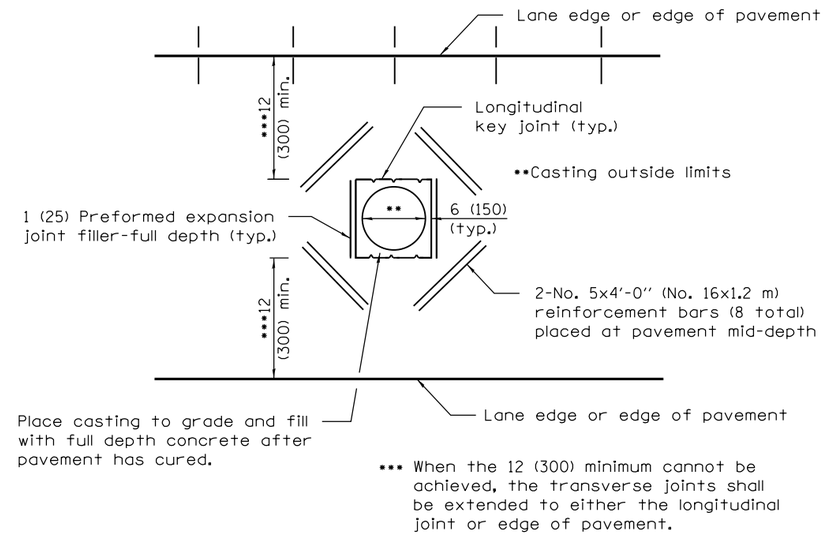


••• When the 12 (300) minimum cannot be achieved, the transverse joints shall be extended to either the longitudinal joint or edge of pavement.

## DETAIL OF ADDED REINFORCEMENT FOR PAVEMENT BLOCK–OUTS

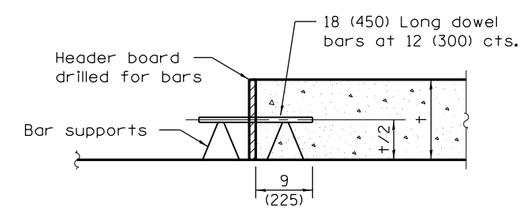


## TRANSVERSE CONSTRUCTION JOINT

• The 15′ (4.5 m) dimension shall be adjusted to 12′ (3.6 m) min. to 18′ (5.5 m) max. when placed adjacent to existing pcc pavement structure so that the joints are in prolongation. Adjust the tie bar spacing to maintain a clearance of 6 (150) from dowel bars.

## GENERAL NOTES

See Standard 420001 for details of joints not shown.

All dimensions are in inches (millimeters) unless otherwise shown.

Illinois Department of Transportation

PASSED January 1, 2015
Michael Brand
ENGINEER OF POLICY AND PROCEDURES
APPROVED January 1, 2015
ENGINEER OF DESIGN AND ENVIRONMENT

ISSUED 1-1-97

| DATE | REVISIONS |
|---|---|
| 1-1-15 | Added dimension of tie |
| | bars from transverse |
| | contraction joints. |
| 1-1-08 | Switched units to |
| | English (metric). |
| | |

# 36′ (10.8 m) JOINTED PCC PAVEMENT

STANDARD 420106–05

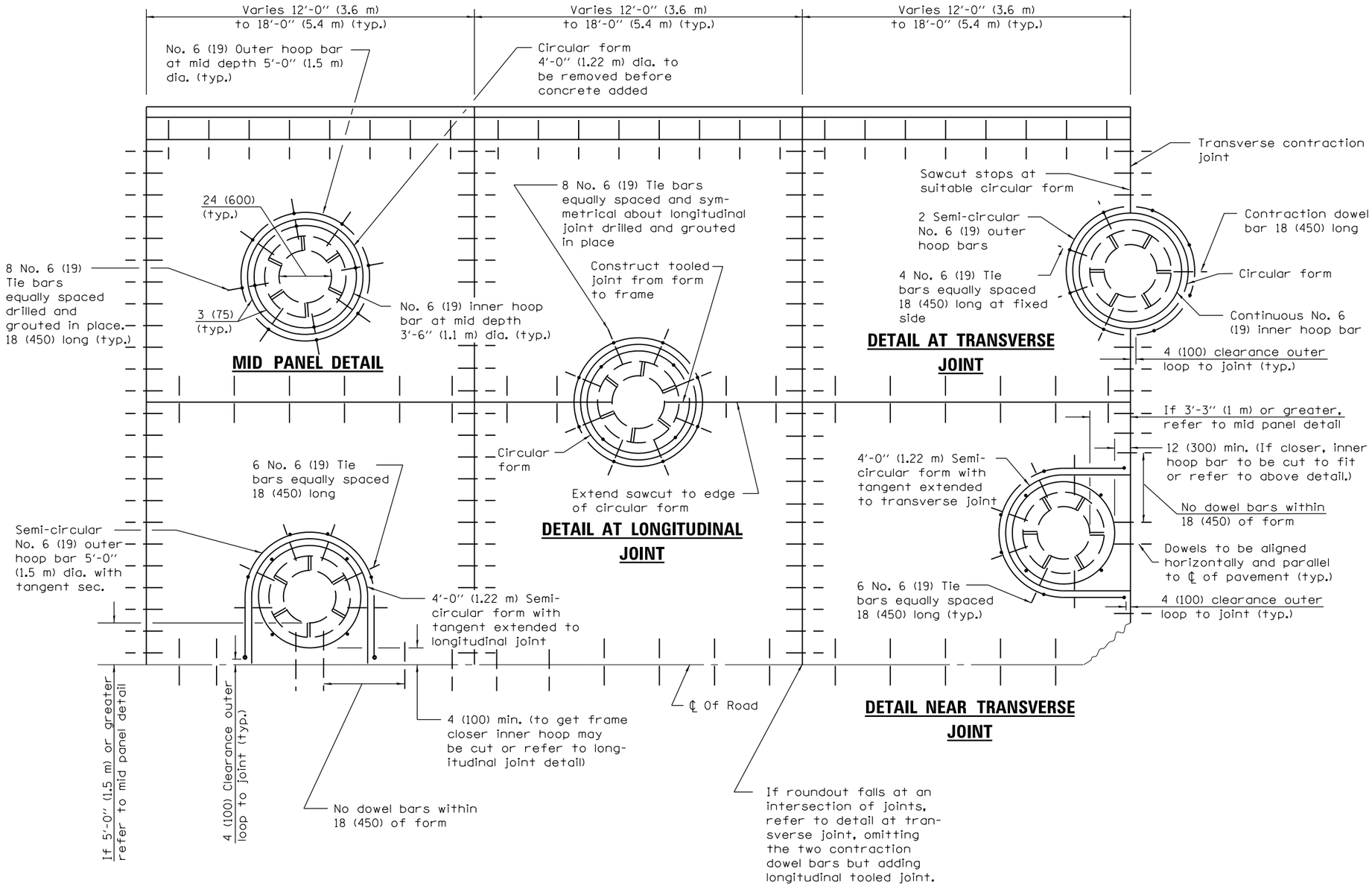


## GENERAL NOTES

Transverse joints may be moved to accommodate roundout. Edge of circular joint shall be minimum 24 (600) from transverse joint. Relocated transverse joint shall be continuous from edge of pavement to edge of pavement.

The transverse joint spacing should be adjusted to avoid using the DETAIL AT TRANSVERSE JOINT. If the joint cannot be adjusted to use the DETAIL NEAR TRANSVERSE JOINT, the joint must be in the center of the structure as shown.

Circular form shall be removed prior to drill and grout of tie bars.

Drill and grout is preferred, however tie bars can be poured in place if clearance is provided to outer edge of frame. Maximum 2 (50) clearance.

Shims shall be used to adjust all frames. After adjusting mortar has cured, the shims shall be removed and the voids under the frames filled with nonshrink grout.

Hoop reinforcement shall be one piece construction having a minimum lap length of 24 (600).

All situations not shown and may require combination of details.

WHEN USING CAST IN PLACE:
Frame shall be anchored to the structure to prevent movement during the paving operation.

All dimensions are in inches (millimeters) unless otherwise shown.

Illinois Department of Transportation

PASSED January 1, 2011
ENGINEER OF POLICY AND PROCEDURES
APPROVED January 1, 2011
ENGINEER OF DESIGN AND ENVIRONMENT

ISSUED 1-1-97

| DATE | REVISIONS |
|---|---|
| 1-1-11 | Corrected 'T/2' dim. on |
| | DETAIL OF REINFORCEMENT |
| | FOR PAVEMENT ROUNDOUT. |
| 1-1-08 | Switched units to |
| | English (metric). |

# PCC PAVEMENT ROUNDOUTS

(Sheet 1 of 2)

STANDARD 420111–03

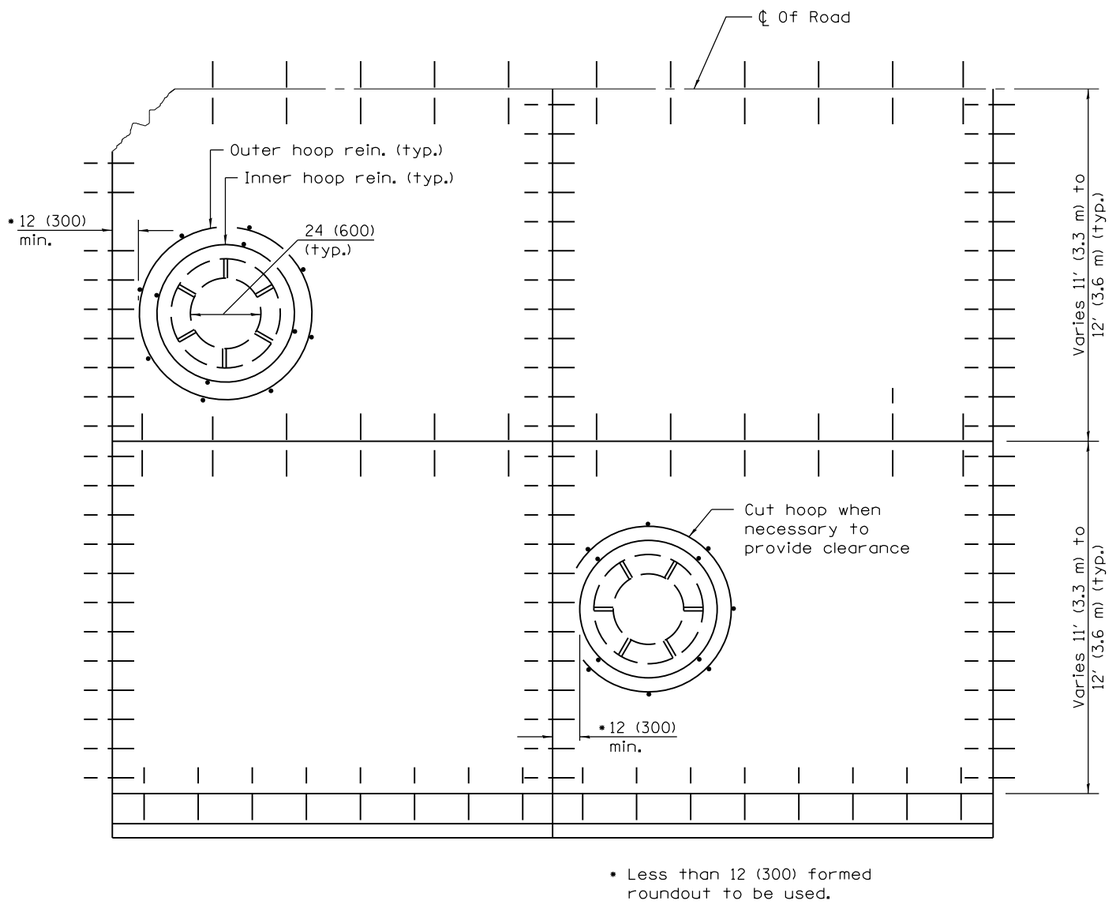


## CAST IN PLACE DETAIL

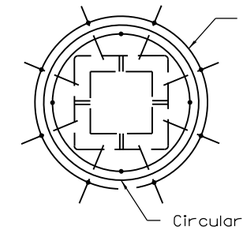


All dimensions same for the majority of circular frame & grates. For larger structures increase hoop bar and circular form diameter by 12 (300) each and add two additional equally spaced tie bars.

## ROUNDOUT FOR SQUARE FRAME & GRATE AND MANHOLES

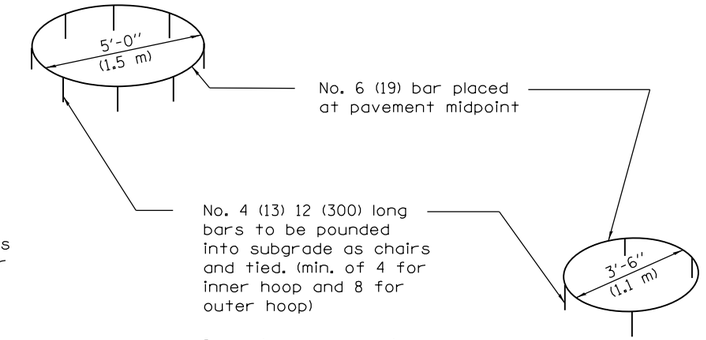


No. 6 (19) bar placed at pavement midpoint

No. 4 (13) 12 (300) long bars to be pounded into subgrade as chairs and tied. (min. of 4 for inner hoop and 8 for outer hoop)

Inner hoop may rest dowel bar (tie bar to longitudinal joint) or tie bars which shall not interfere in the alignment.

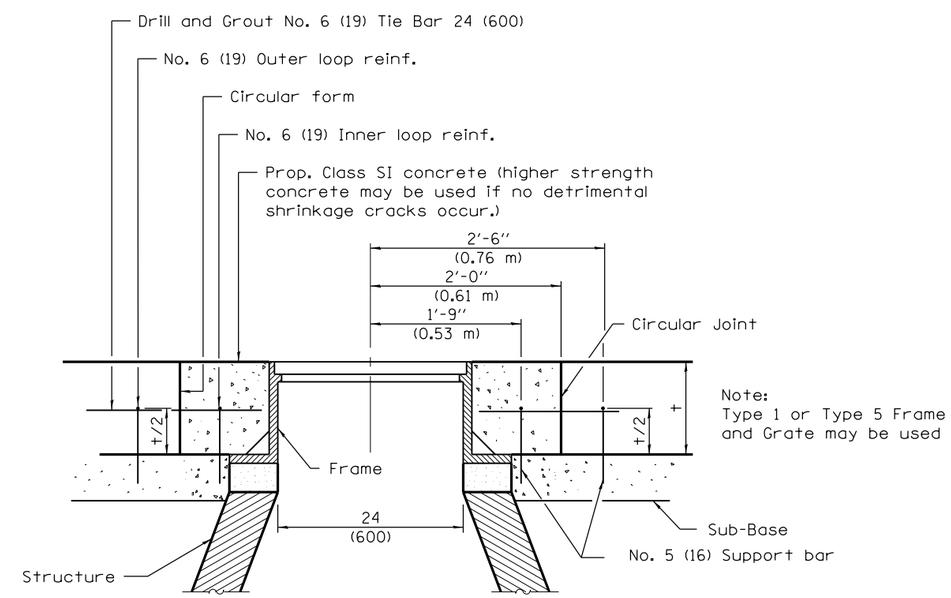


Note:
Type 1 or Type 5 Frame and Grate may be used

## DETAIL OF REINFORCEMENT FOR PAVEMENT ROUNDOUT

Illinois Department of Transportation

PASSED January 1, 2011
Michael Brand
ENGINEER OF POLICY AND PROCEDURES
APPROVED January 1, 2011
Scott Bennett
ENGINEER OF DESIGN AND ENVIRONMENT

ISSUED 1-1-97

# PCC PAVEMENT ROUNDOUTS

(Sheet 2 of 2)

STANDARD 420111–03

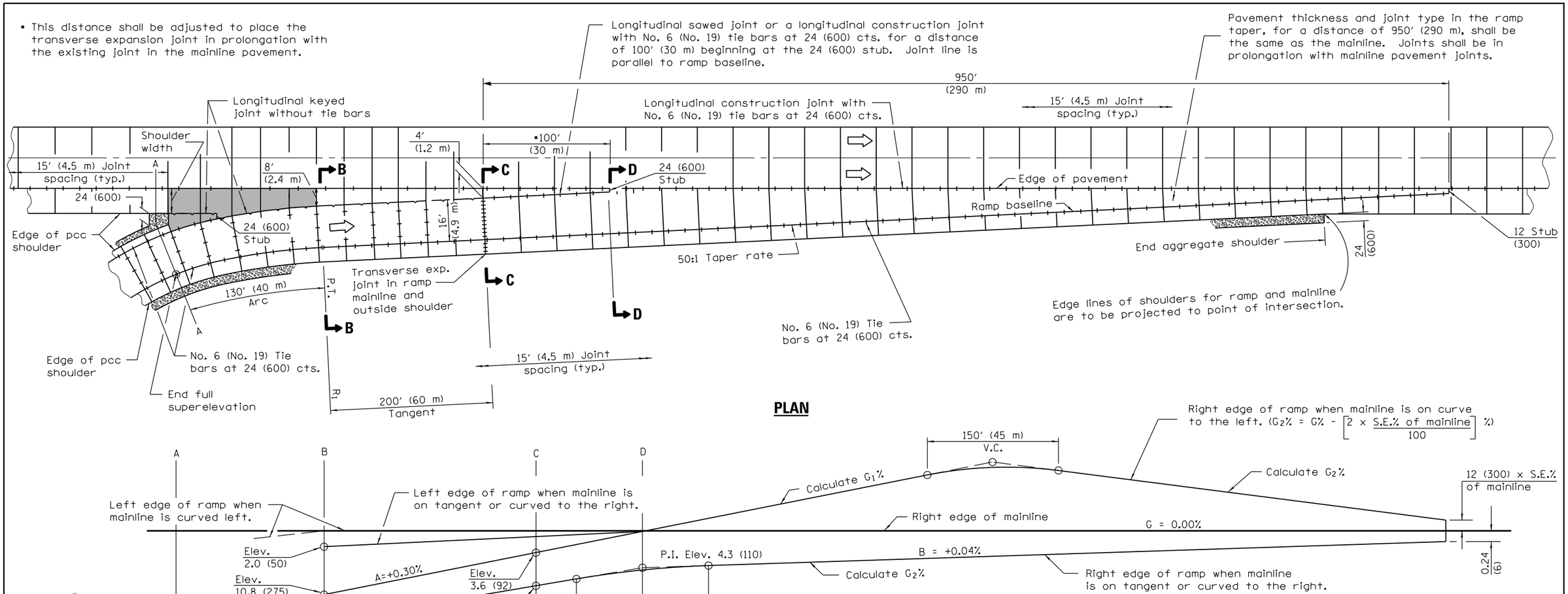


## PLAN

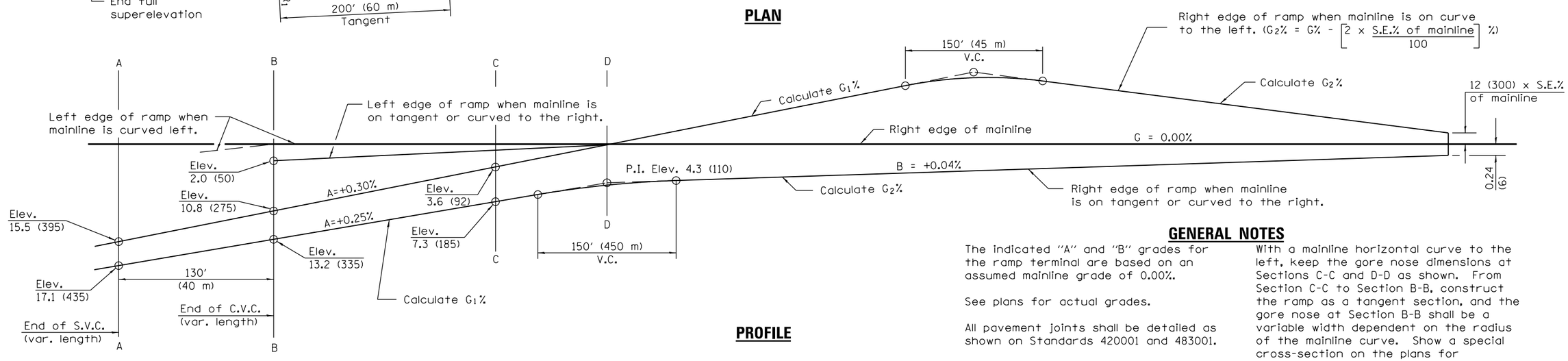


## PROFILE

## GENERAL NOTES

The indicated "A" and "B" grades for the ramp terminal are based on an assumed mainline grade of 0.00%.

See plans for actual grades.

All pavement joints shall be detailed as shown on Standards 420001 and 483001.

See Standard 483001 for ramp shoulder details.

Between Sections A-A and B-B (shaded area), provide a drainage swale and flush inlet to enhance drainage.

When using grades expressed in %, the grade value shall be divided by 100 to obtain vertical offsets.

When using radius R1 less then the minimum, verify the required acceleration length will be provided.

With a mainline horizontal curve to the left, keep the gore nose dimensions at Sections C-C and D-D as shown. From Section C-C to Section B-B, construct the ramp as a tangent section, and the gore nose at Section B-B shall be a variable width dependent on the radius of the mainline curve. Show a special cross-section on the plans for Section B-B.

With a mainline horizontal curve to the right, keep the gore nose dimensions at Sections D-D, C-C, and B-B as shown, and the edge of the ramp between Sections C-C and B-B is constructed as a compound curve tying Section C-C.

All dimensions are in inches (millimeters) unless otherwise shown.

Illinois Department of Transportation

PASSED January 1, 2015
Michael Beard
ENGINEER OF POLICY AND PROCEDURES
APPROVED January 1, 2015
ENGINEER OF DESIGN AND ENVIRONMENT

ISSUED 1-1-97

| DATE | REVISIONS |
|---|---|
| 1-1-15 | Revised general note to |
| | be generic for R1. |
| | |
| 1-1-14 | Now show transverse joint |
| | at sec. C-C extended |
| | through shoulder. |

# ENTRANCE RAMP TERMINAL

(JOINTED PCC RAMP PAVEMENT ADJACENT TO JOINTED PCC MAINLINE PAVEMENT)

(Sheet 1 of 2)

**STANDARD 420201–09**

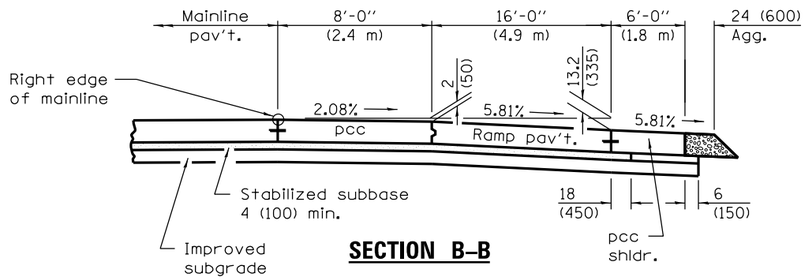


**SECTION B–B**

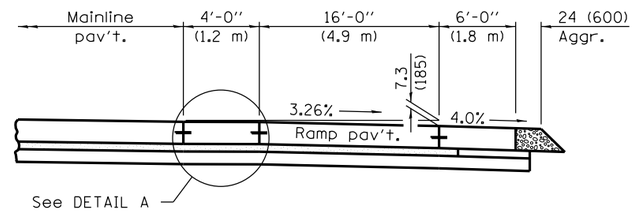


**SECTION C–C**

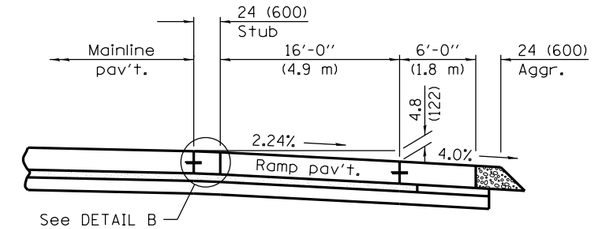


**SECTION D–D**

## CROSS SECTIONS WHEN MAINLINE IS ON TANGENT OR CURVED TO THE RIGHT

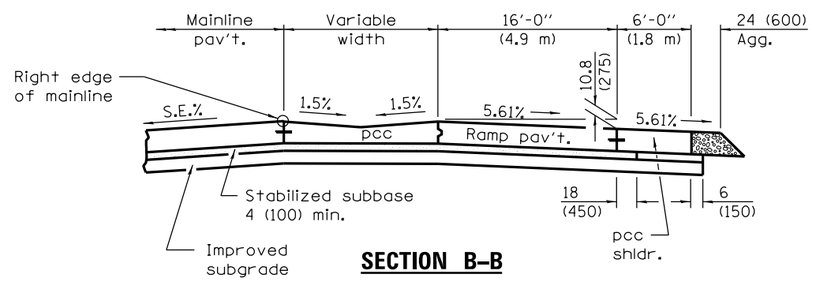


**SECTION B–B**

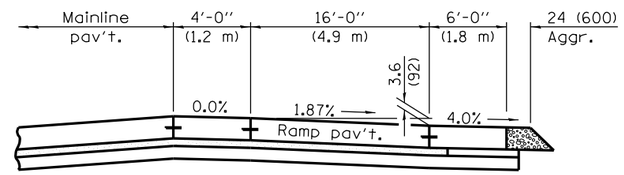


**SECTION C–C**

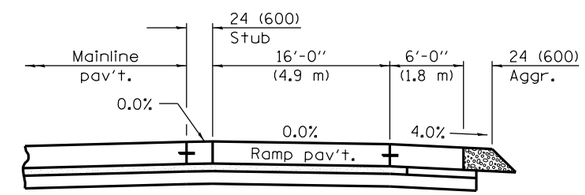


**SECTION D–D**

## CROSS SECTIONS WHEN MAINLINE IS CURVED TO THE LEFT

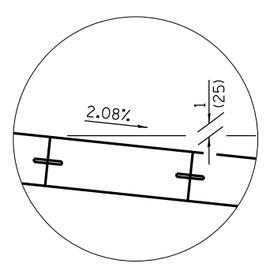


**DETAIL A**

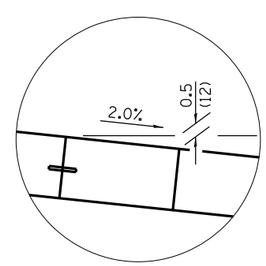


**DETAIL B**

Illinois Department of Transportation

PASSED January 1, 2015

Michael Brand
ENGINEER OF POLICY AND PROCEDURES

APPROVED January 1, 2015

ENGINEER OF DESIGN AND ENVIRONMENT

ISSUED 1-1-97

# ENTRANCE RAMP TERMINAL

(JOINTED PCC RAMP PAVEMENT ADJACENT TO JOINTED PCC MAINLINE PAVEMENT)

(Sheet 2 of 2)

**STANDARD 420201–09**

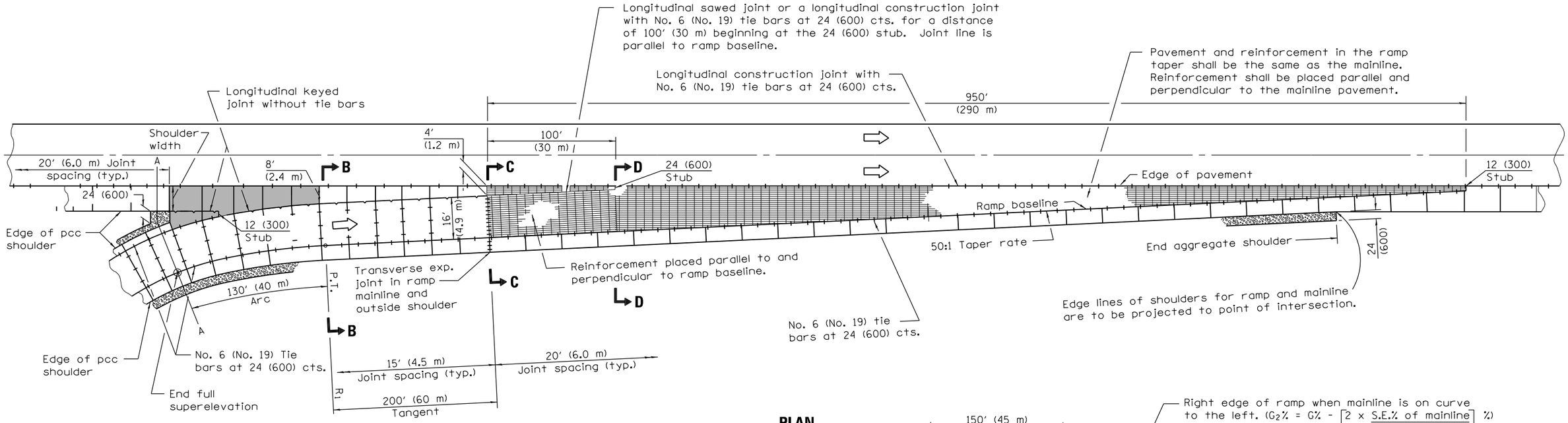


## GENERAL NOTES

The indicated "A" and "B" grades for the ramp terminal are based on an assumed mainline grade of 0.00%.

See plans for actual grades.

All pavement joints shall be detailed as shown on Standards 420001 and 483001.

See Standard 483001 for ramp shoulder details.

Between Sections A-A and B-B (shaded area), provide a drainage swale and flush inlet to enhance drainage.

When using grades expressed in %, the grade value shall be divided by 100 to obtain vertical offsets.

When using a radius R1 less then the minimum, verify the required acceleration length will be provided.

With a mainline horizontal curve to the left, keep the gore nose dimensions at Sections C-C and D-D as shown. From Section C-C to Section B-B, construct the ramp as a tangent section, and the gore nose at Section B-B shall be a variable width dependent on the radius of the mainline curve. Show a special cross-section on the plans for Section B-B.

With a mainline horizontal curve to the right, keep the gore nose dimensions at Sections D-D, C-C, and B-B as shown, and the edge of the ramp between Sections C-C and B-B is constructed as a compound curve tying Section C-C.

All dimensions are in inches (millimeters) unless otherwise shown.

Illinois Department of Transportation

PASSED January 1, 2015
Michael Brand
ENGINEER OF POLICY AND PROCEDURES
APPROVED January 1, 2015
ENGINEER OF DESIGN AND ENVIRONMENT

ISSUED 1-1-97

| DATE | REVISIONS |
|---|---|
| 1-1-15 | Revised general note to |
| | be generic for R1. |
| | |
| 1-1-14 | Now show transverse joint |
| | at sec. C-C extended |
| | through shoulder. |

# ENTRANCE RAMP TERMINAL

(JOINTED PCC RAMP PAVEMENT ADJACENT TO CRC MAINLINE PAVEMENT)

(Sheet 1 of 2)

**STANDARD 420206–10**

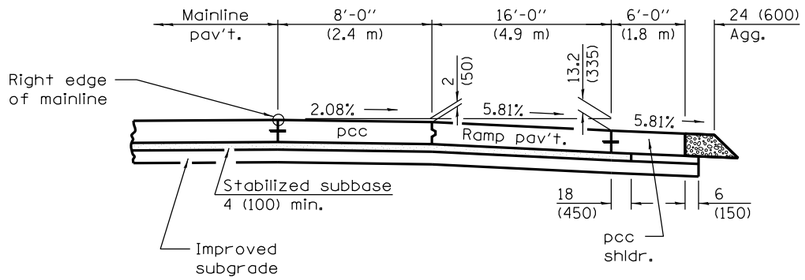


**SECTION B–B**

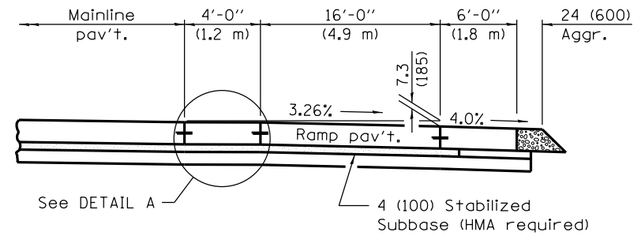


**SECTION C–C**

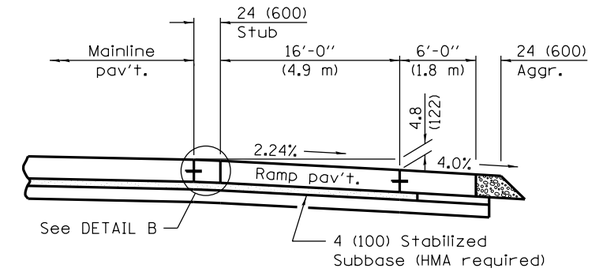


**SECTION D–D**

## CROSS SECTIONS WHEN MAINLINE IS ON TANGENT OR CURVED TO THE RIGHT

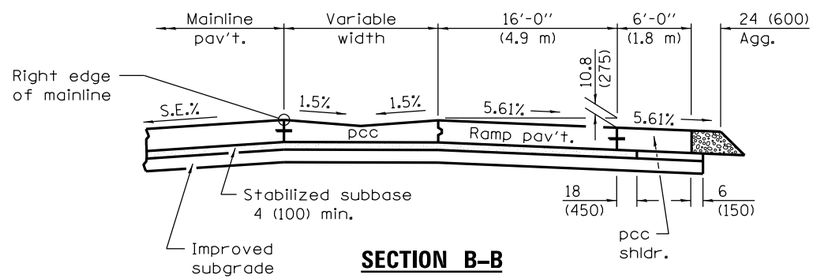


**SECTION B–B**

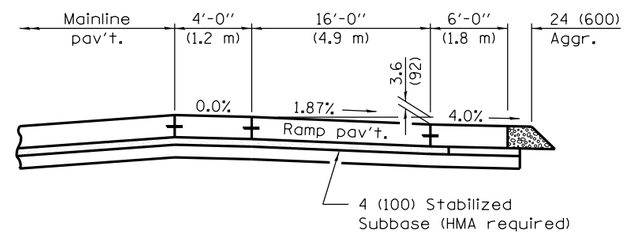


**SECTION C–C**

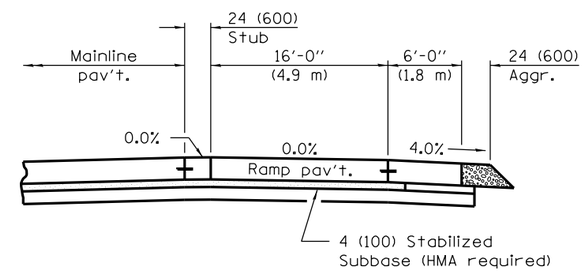


**SECTION D–D**

## CROSS SECTIONS WHEN MAINLINE IS CURVED TO THE LEFT

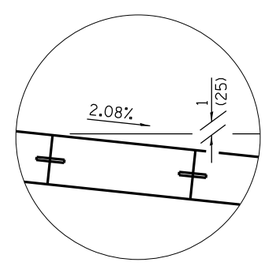


**DETAIL A**

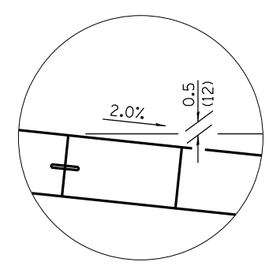


**DETAIL B**

Illinois Department of Transportation

PASSED January 1. 2015

Michael Brand
ENGINEER OF POLICY AND PROCEDURES

APPROVED January 1. 2015

ENGINEER OF DESIGN AND ENVIRONMENT

ISSUED 1-1-97

# ENTRANCE RAMP TERMINAL

(JOINTED PCC RAMP PAVEMENT
ADJACENT TO CRC MAINLINE PAVEMENT)

(Sheet 2 of 2)

**STANDARD 420206–10**

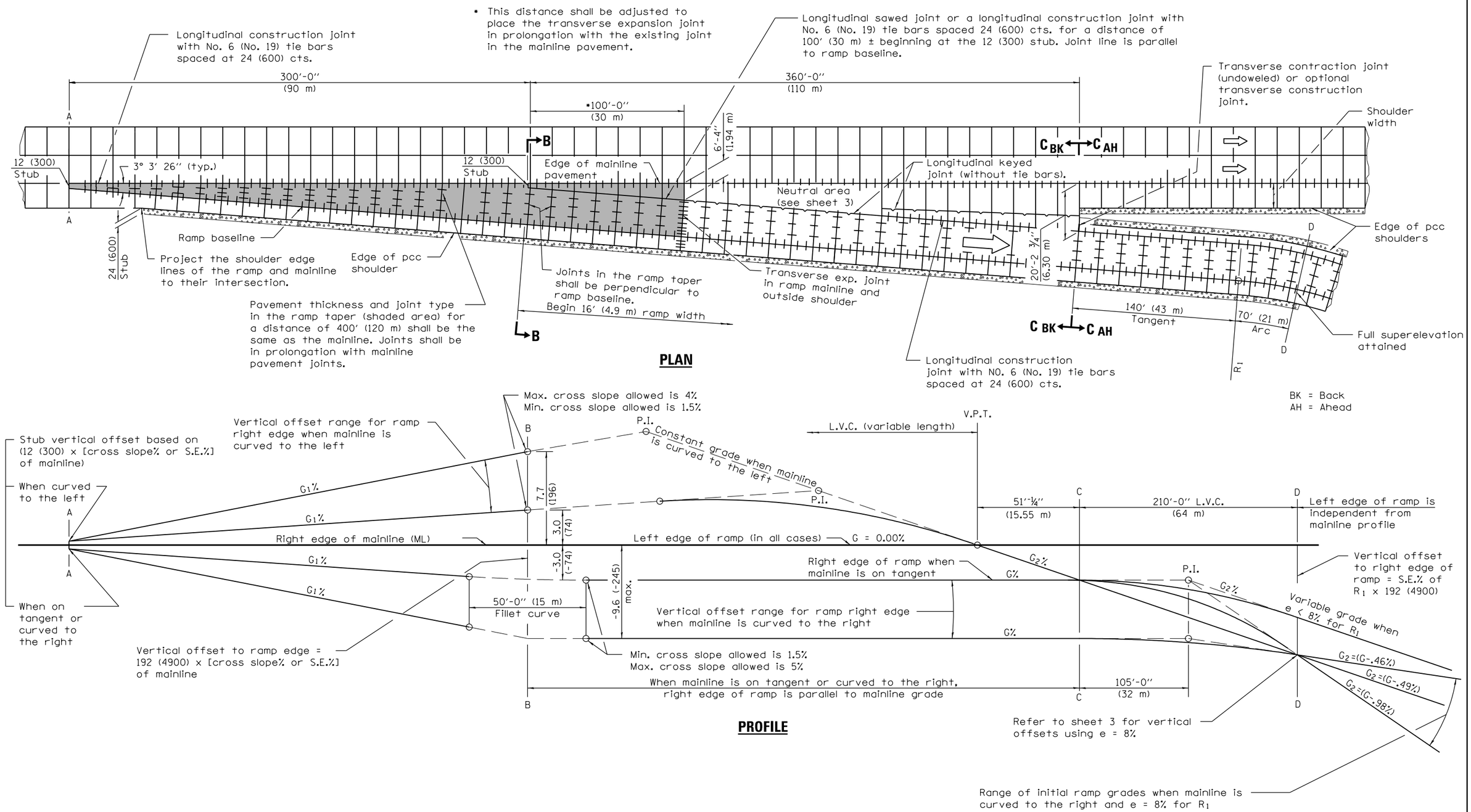


See Sheet 3 for GENERAL NOTES

Illinois Department of Transportation

PASSED January 1, 2015
Michael Brand
ENGINEER OF POLICY AND PROCEDURES
APPROVED January 1, 2015
ENGINEER OF DESIGN AND ENVIRONMENT

ISSUED 1-1-97

| DATE | REVISIONS |
|---|---|
| 1-1-15 | Corrected divergence angle |
| | at taper. Based profile off |
| | of e-max instead of R1. |
| 1-1-14 | Now show tranverse |
| | expansion joint extended |
| | through shoulder. |

# EXIT RAMP TERMINAL

(JOINTED PCC RAMP PAVEMENT ADJACENT TO JOINTED PCC MAINLINE PAVEMENT)

(Sheet 1 of 3)

**STANDARD 420301–06**

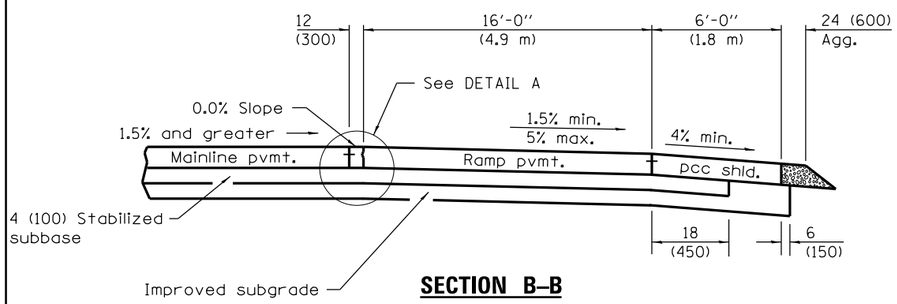


**SECTION B–B**

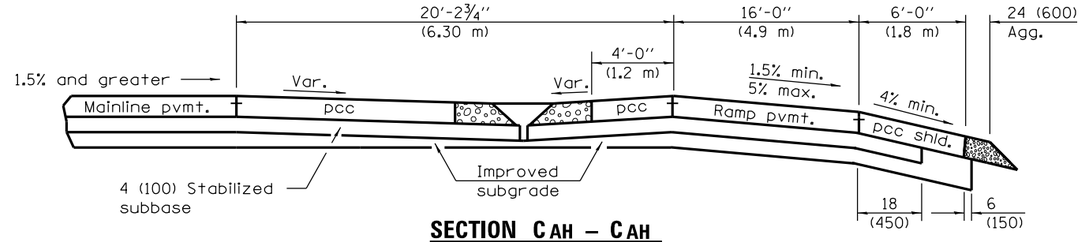


**SECTION $C_{AH}$ – $C_{AH}$**

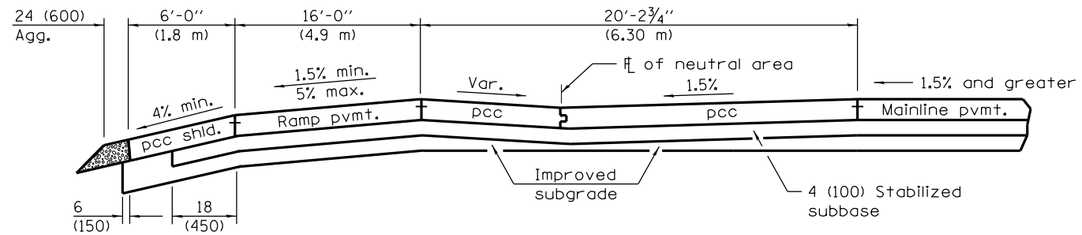


**SECTION $C_{BK}$ – $C_{BK}$**

BK = Back
AH = Ahead

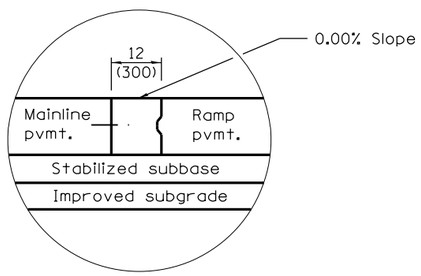


**DETAIL A**

## WHEN MAINLINE IS ON TANGENT OR CURVED TO THE RIGHT

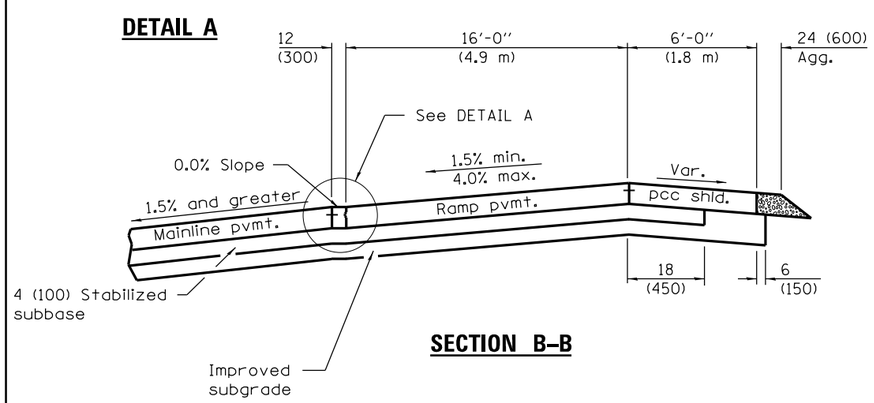


**SECTION B–B**

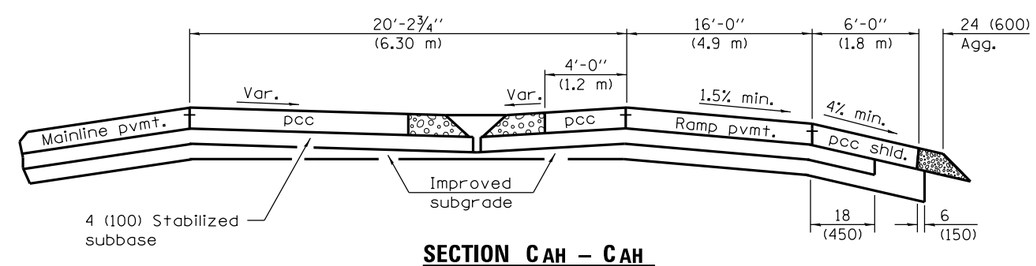


**SECTION $C_{AH}$ – $C_{AH}$**

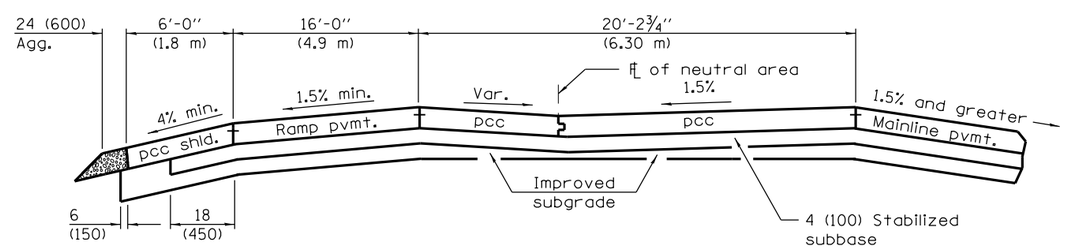


**SECTION $C_{BK}$ – $C_{BK}$**

See Sheet 3 for GENERAL NOTES

## WHEN MAINLINE IS CURVED TO THE LEFT

Illinois Department of Transportation

PASSED January 1, 2015
Michael Brand
ENGINEER OF POLICY AND PROCEDURES
APPROVED January 1, 2015
ENGINEER OF DESIGN AND ENVIRONMENT

ISSUED 1-1-97

# EXIT RAMP TERMINAL

(JOINTED PCC RAMP PAVEMENT
ADJACENT TO JOINTED PCC MAINLINE PAVEMENT)

(Sheet 2 of 3)

**STANDARD 420301–06**

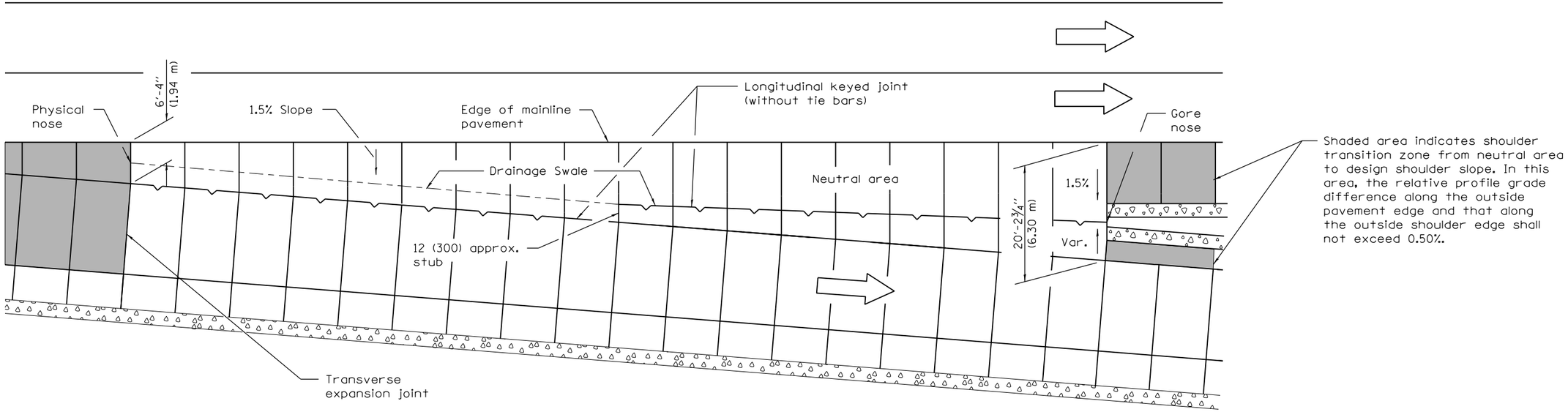


## DETAILS FOR DRAINAGE IN NEUTRAL AREA

| (1) Vertical offsets in inches for right edge of ramp, when e = 8% | | | |
|---|---|---|---|
| Sections | Mainline on Tangent | Mainline Curved Right | Mainline Curved Left |
| A | - 0.18 | S.E. % ML x 12 | S.E. % ML x 12 (2) |
| B | - 3.0 | S.E. % ML x 192 | S.E. % ML x 192 (2) |
| C | - 3.0 | S.E. % ML x 192 | - 3.0 |
| D | - 15.4 | - 15.4 | - 15.4 |

| (1) Vertical offsets in mm for right edge of ramp, when e = 8% | | | |
|---|---|---|---|
| Sections | Mainline on Tangent | Mainline Curved Right | Mainline Curved Left |
| A | - 5 | S.E.% ML x 300 | S.E.% ML x 300 (2) |
| B | - 74 | S.E.% ML x 4900 | S.E.% ML x 4900 (2) |
| C | - 74 | S.E. % ML x 4900 | - 74 |
| D | - 392 | - 392 | - 392 |

(1) Vertical offset values are calculated and based on the right edge of mainline pavement at 0.0 % grade.

(2) The vertical offsets of these points are above the mainline pavement and lie on an upgrade in relationship to the mainline grade.

(3) S.E.=Superelevation Rate

## GENERAL NOTES

The initial ramp grade ($G_2$) is based on the line generated through the PI that is 105′ (32 m) past Section C-C and the point created by the vertical offset at Section D-D.

See plans for actual grades.

All pavement joints shall be detailed as shown on Standards 420001 and 483001.

See Standard 483001 for ramp shoulder details.

In the neutral area, provide a swale and flush inlet to enhance drainage.

When using grades expressed in %, the grade values shall be divided by 100 to obtain vertical offsets.

Where an exit ramp terminal is proposed adjacent to a mainline horizontal curve, construct the edge of the terminal by using offset widths, and for the terminal segment downstream from Section C-C to $R_1$, construct the ramp as a 141′ (43 m) tangent section.

All dimensions are in inches (millimeters) unless otherwise shown.

Illinois Department of Transportation

PASSED January 1, 2015
Michael Brand
ENGINEER OF POLICY AND PROCEDURES
APPROVED January 1, 2015
ENGINEER OF DESIGN AND ENVIRONMENT

ISSUED 1-1-97

# EXIT RAMP TERMINAL

(JOINTED PCC RAMP PAVEMENT ADJACENT TO JOINTED PCC MAINLINE PAVEMENT)

(Sheet 3 of 3)

**STANDARD 420301–06**

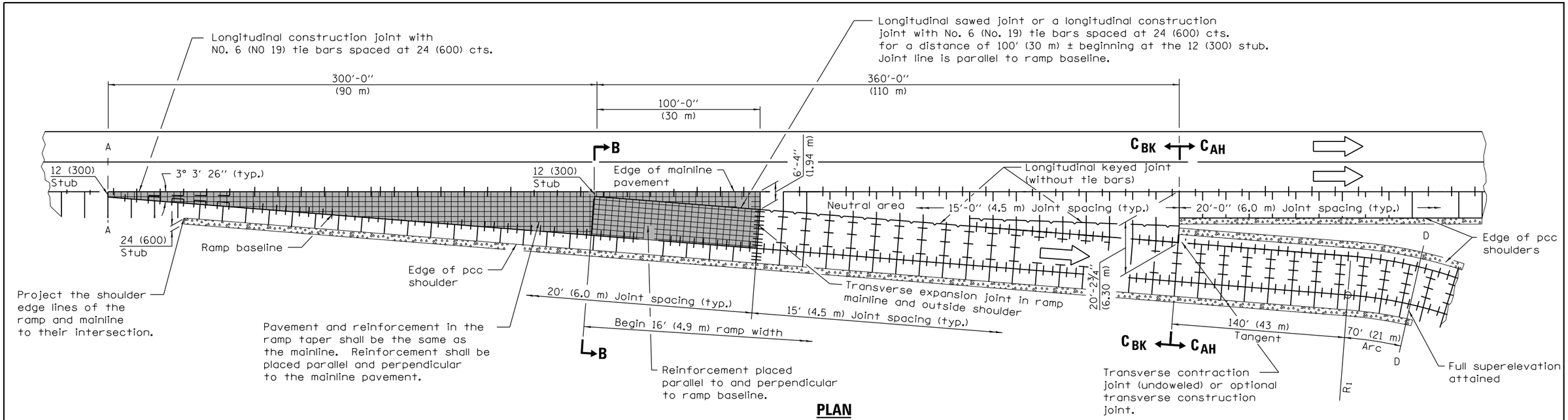


**PLAN**

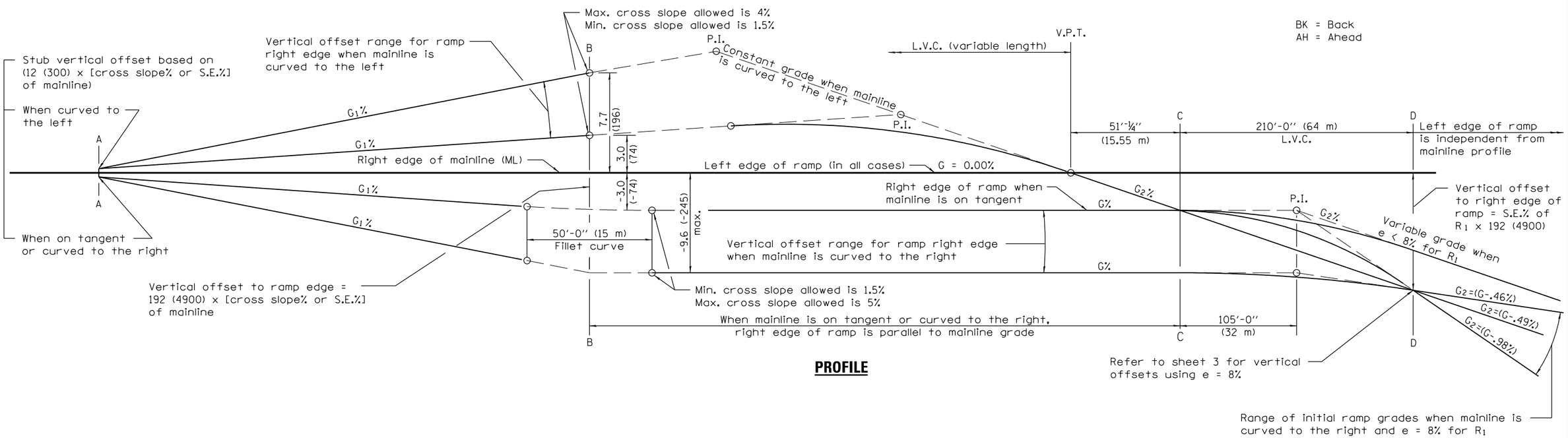


**PROFILE**

See Sheet 3 for GENERAL NOTES

Illinois Department of Transportation

PASSED January 1. 2015
ENGINEER OF POLICY AND PROCEDURES
APPROVED January 1. 2015
ENGINEER OF DESIGN AND ENVIRONMENT

ISSUED 1-1-97

| DATE | REVISIONS |
|---|---|
| 1-1-15 | Corrected divergence angle |
| | at taper. Based profile off |
| | of e-max instead of R1. |
| 1-1-14 | Now show transverse |
| | expansion joint extended |
| | through outside shoulder. |

# EXIT RAMP TERMINAL

(JOINTED PCC RAMP PAVEMENT ADJACENT TO CRC MAINLINE PAVEMENT)

(Sheet 1 of 3)

**STANDARD 420306–08**

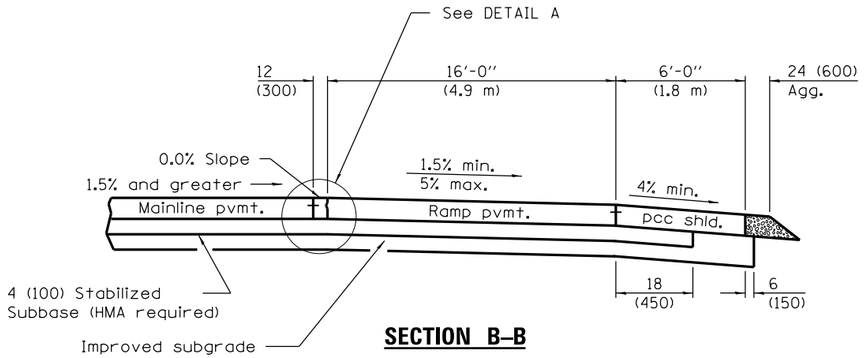


**SECTION B–B**

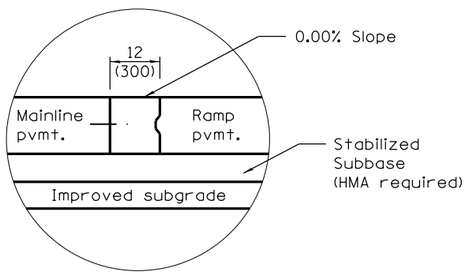


**DETAIL A**

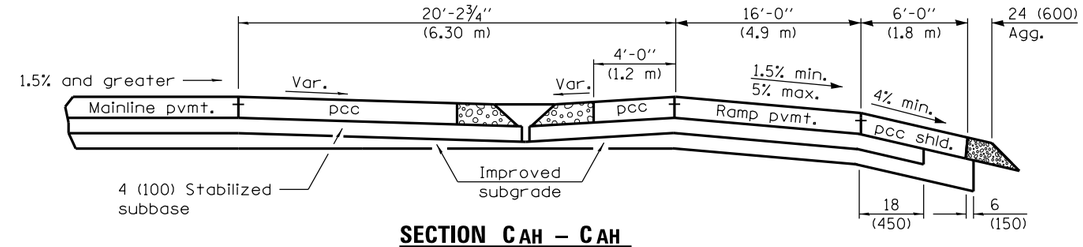


**SECTION CAH – CAH**

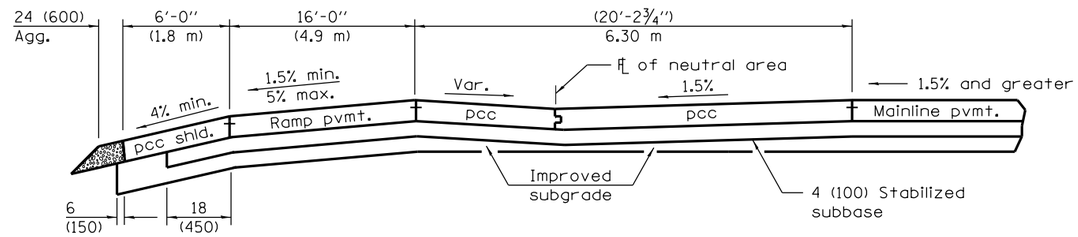


**SECTION CBK – CBK**

BK = Back
AH = Ahead

## WHEN MAINLINE IS ON TANGENT OR CURVED TO THE RIGHT

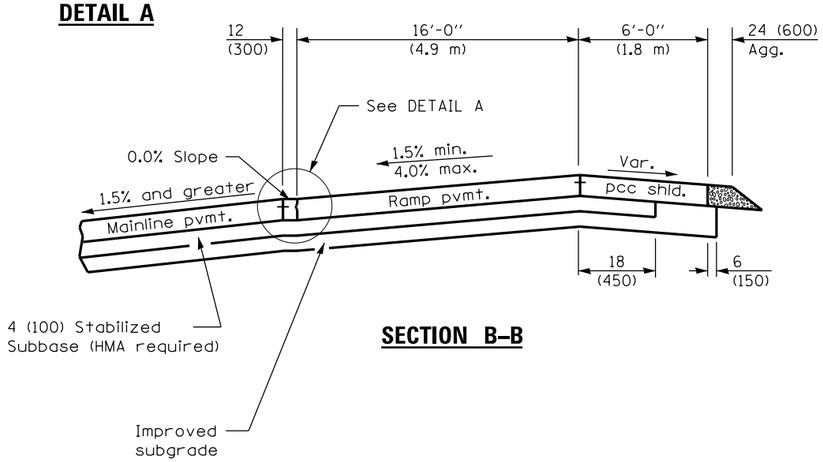


**SECTION B–B**

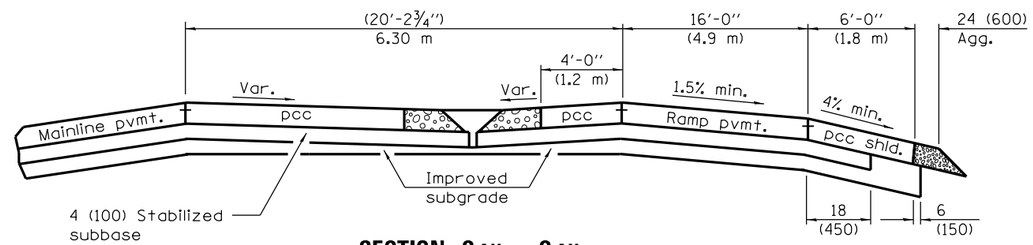


**SECTION CAH – CAH**

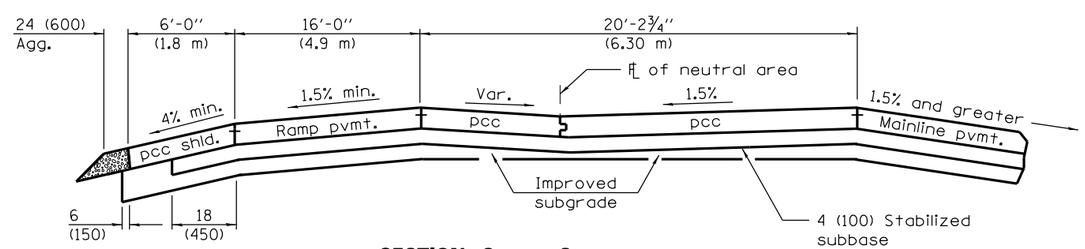


**SECTION CBK – CBK**

See Sheet 3 for GENERAL NOTES

## WHEN MAINLINE IS CURVED TO THE LEFT

Illinois Department of Transportation

PASSED January 1, 2015
ENGINEER OF POLICY AND PROCEDURES
APPROVED January 1, 2015
ENGINEER OF DESIGN AND ENVIRONMENT

ISSUED 1-1-97

# EXIT RAMP TERMINAL

(JOINTED PCC RAMP PAVEMENT
ADJACENT TO CRC MAINLINE PAVEMENT)

(Sheet 2 of 3)

**STANDARD 420306–08**

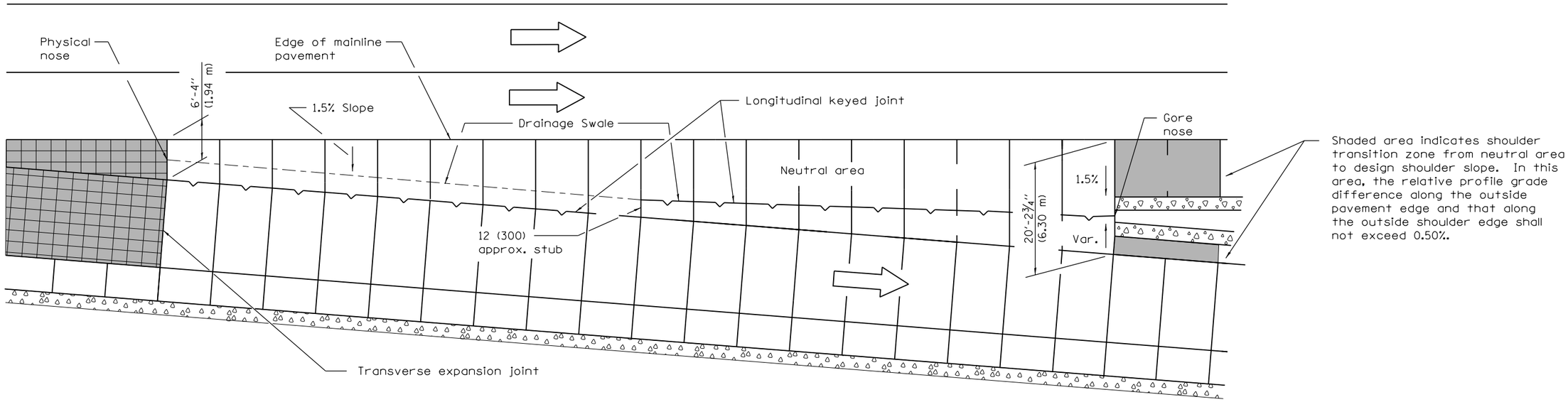


## DETAILS FOR DRAINAGE IN NEUTRAL AREA

| Vertical offsets in inches for right edge of ramp, when e = 8% (1) | | | |
|---|---|---|---|
| Sections | Mainline on Tangent | Mainline Curved Right | Mainline Curved Left |
| A | - 0.18 | S.E. % ML x 12 | S.E. % ML x 12 (2) |
| B | - 3.0 | S.E. % ML x 192 | S.E. % ML x 192 (2) |
| C | - 3.0 | S.E. % ML x 192 | - 3.0 |
| D | - 15.4 | - 15.4 | - 15.4 |

| (1) Vertical offsets in mm for right edge of ramp, when e = 8% | | | |
|---|---|---|---|
| Sections | Mainline on Tangent | Mainline Curved Right | Mainline Curved Left |
| A | - 5 | S.E.% ML x 300 | S.E.% ML x 300 (2) |
| B | - 74 | S.E.% ML x 4900 | S.E.% ML x 4900 (2) |
| C | - 74 | S.E. % ML x 4900 | - 74 |
| D | - 392 | - 392 | - 392 |

(1) Vertical offset values are calculated and based on the right edge of mainline pavement at 0.0 % grade.

(2) The vertical offsets of these points are above the mainline pavement and lie on an upgrade in relationship to the mainline grade.

(3) S.E.=Superelevation Rate

## GENERAL NOTES

The initial ramp grade ($G_2$) is based on the line generated through the PI that is 105' (32 m) past Section C-C and the point created by the vertical offset at Section D-D.

See plans for actual grades.

All pavement joints shall be detailed as shown on Standards 420001 and 483001.

See Standard 483001 for ramp shoulder details.

In the neutral area, provide a swale and flush inlet to enhance drainage.

When using grades expressed in %, the grade values shall be divided by 100 to obtain vertical offsets.

Where an exit ramp terminal is proposed adjacent to a mainline horizontal curve, construct the edge of the terminal by using offset widths, and for the terminal segment downstream from Section C-C to $R_1$, construct the ramp as a 141' (43 m) tangent section.

All dimensions are in inches (millimeters) unless otherwise shown.

Illinois Department of Transportation

PASSED January 1. 2015
ENGINEER OF POLICY AND PROCEDURES
APPROVED January 1. 2015
ENGINEER OF DESIGN AND ENVIRONMENT

ISSUED 1-1-97

# EXIT RAMP TERMINAL

(JOINTED PCC RAMP PAVEMENT ADJACENT TO CRC MAINLINE PAVEMENT)

(Sheet 3 of 3)

**STANDARD 420306–08**

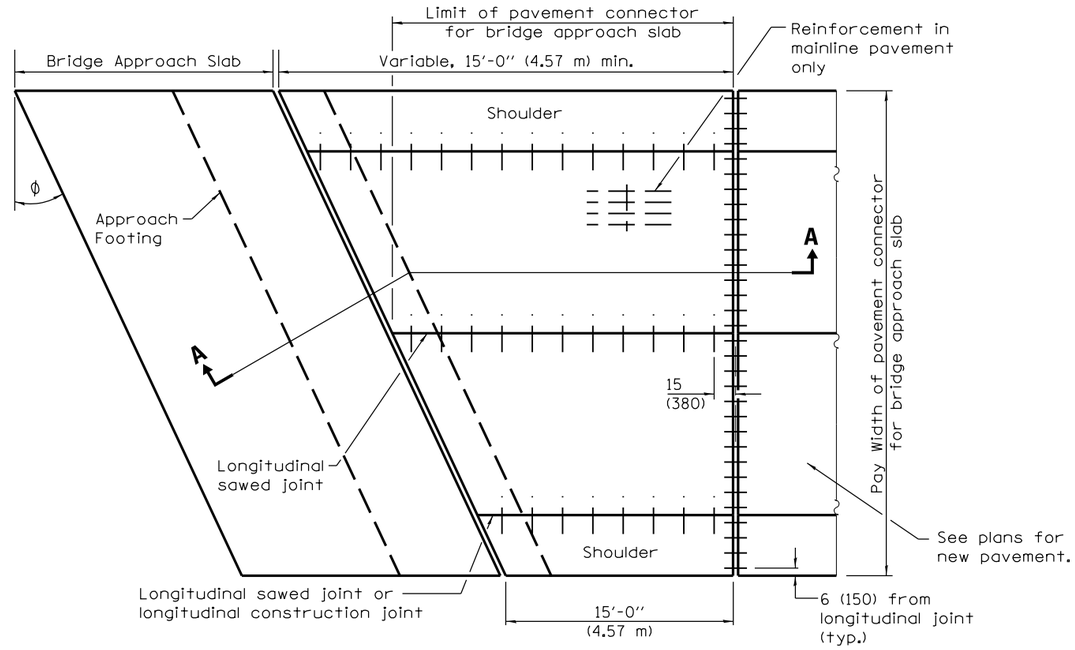


**PLAN**
**NEW CONSTRUCTION**

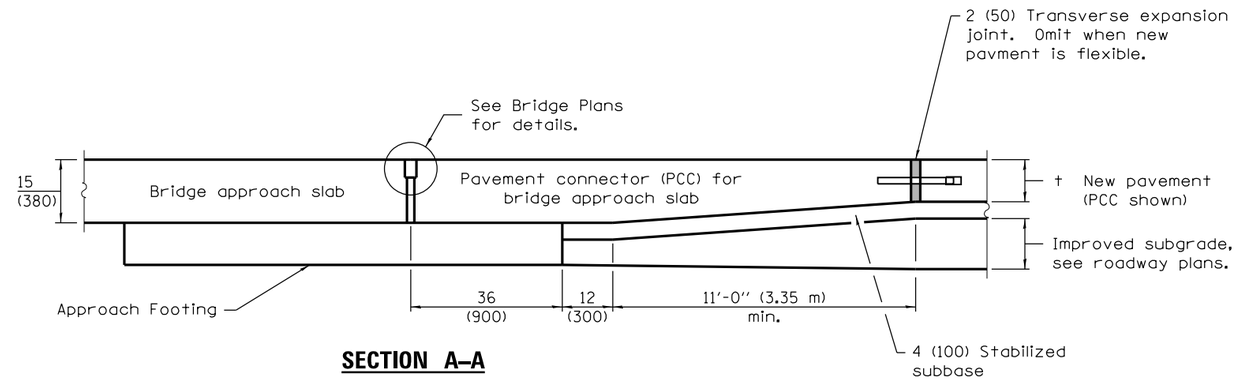


**SECTION A–A**

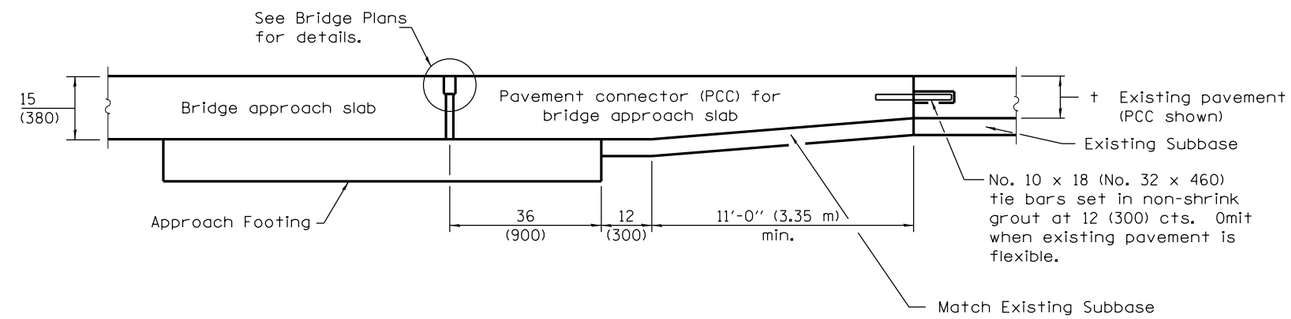


**SECTION B–B**

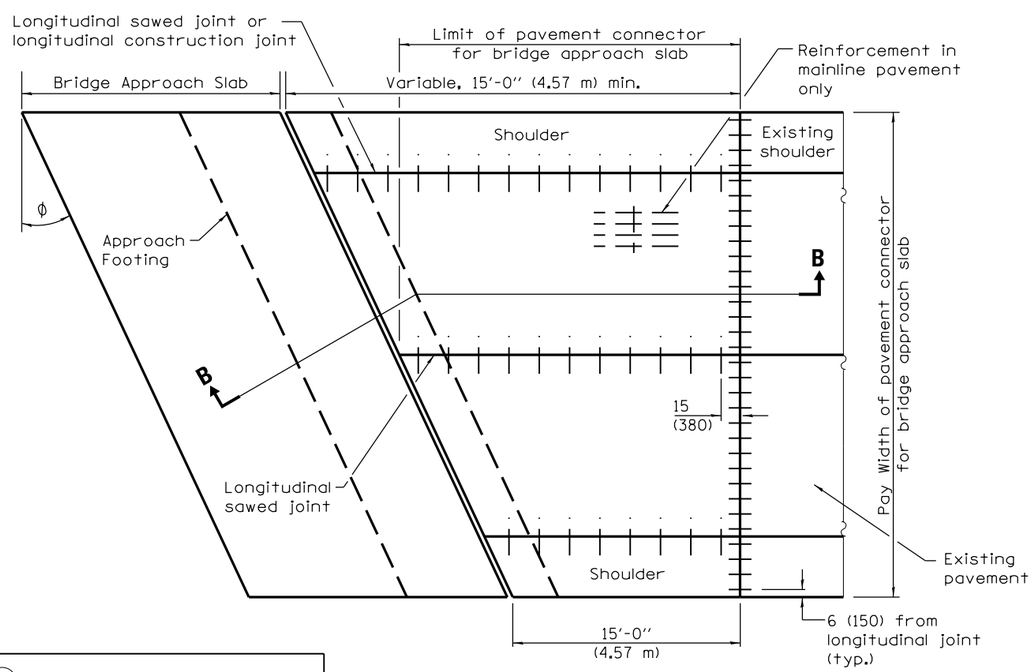


**PLAN**
**EXISTING CONSTRUCTION**

## GENERAL NOTES

THICKNESS-"t"=Thickness of Pavement.

See Standard 421001 for reinforcement details not shown.

See Standard 420001 for pavement joint details not shown.

See Standard 610001 for shoulder inlet with curb when required.

See plans for details of bridge approach slab, approach footing and joint treatment.

All dimensions are in inches (millimeters) unless otherwise shown.

Illinois Department of Transportation

APPROVED April 1, 2016
Michael Brand
ENGINEER OF POLICY AND PROCEDURES

APPROVED April 1, 2016
ENGINEER OF DESIGN AND ENVIRONMENT

ISSUED 1-1-97

| DATE | REVISIONS |
|---|---|
| 4-1-16 | Revised pavement connector |
| | to be rigid only. Omitted WFB |
| | term. joint. Renamed std. |
| 1-1-15 | Added pay width for new |
| | construction. Corrected |
| | typo. |

# PAVEMENT CONNECTOR (PCC) FOR BRIDGE APPROACH SLAB

**STANDARD 420401–12**

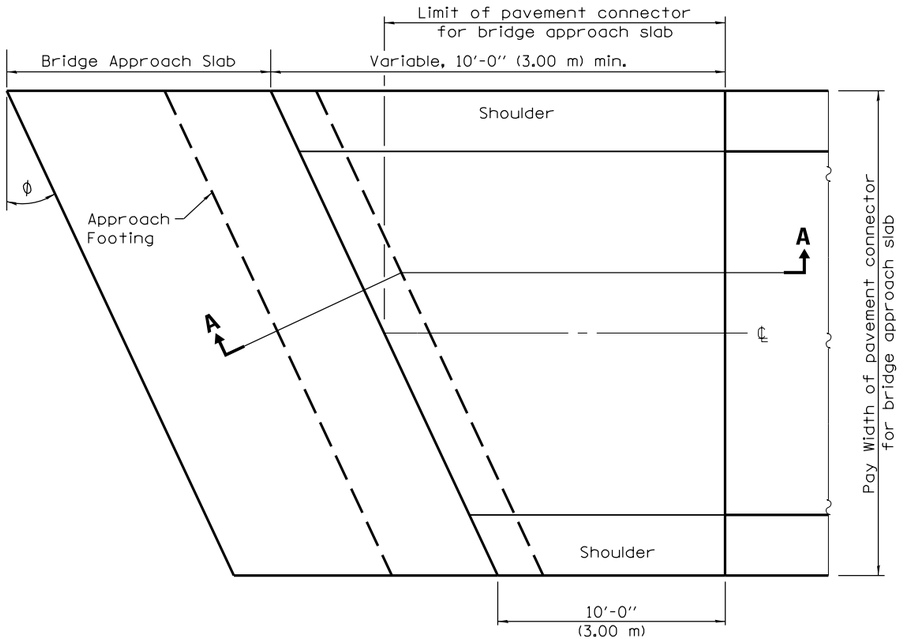


**PLAN**
(New or existing construction)

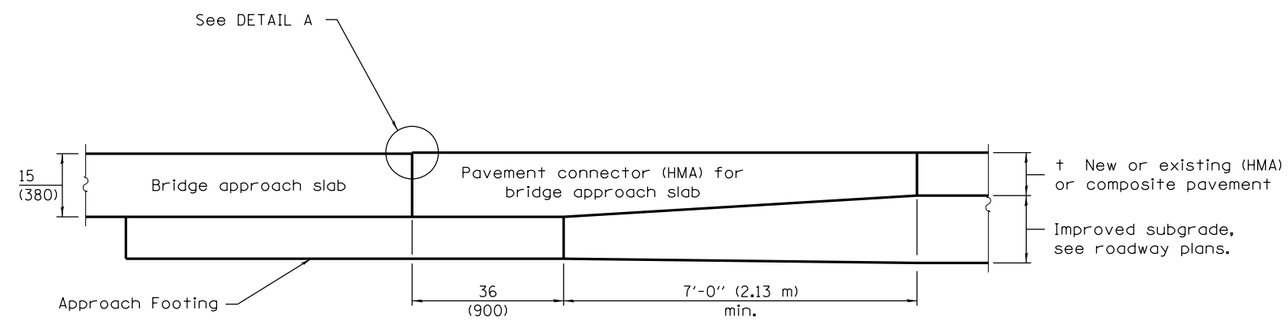


**SECTION A–A**

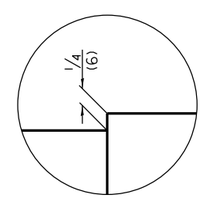


**DETAIL A**

## GENERAL NOTES

THICKNESS-"t"=Thickness of Pavement.

See Standard 610001 for shoulder inlet with curb when required.

See plans for details of bridge approach slab and approach footing.

All dimensions are in inches (millimeters) unless otherwise shown.

Illinois Department of Transportation

APPROVED April, 2016
Michael Brand
ENGINEER OF POLICY AND PROCEDURES

APPROVED April, 2016
ENGINEER OF DESIGN AND ENVIRONMENT

ISSUED 1-1-97

| DATE | REVISIONS |
|---|---|
| 4-1-16 | New standard. |
| | |
| | |
| | |
| | |
| | |

# PAVEMENT CONNECTOR (HMA) FOR BRIDGE APPROACH SLAB

**STANDARD 420406**

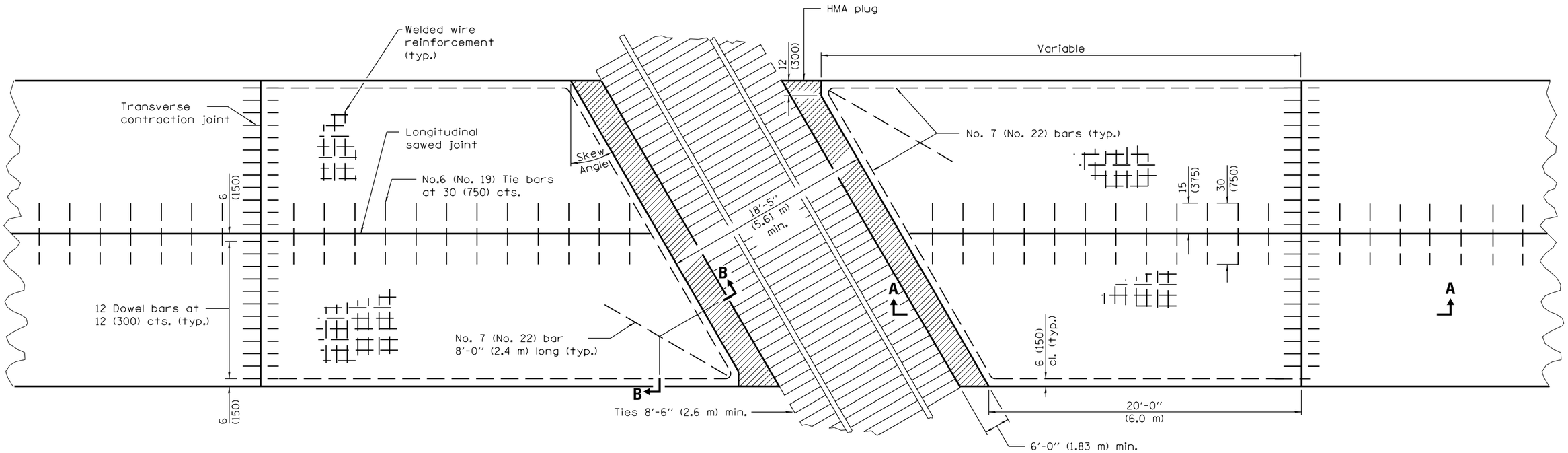


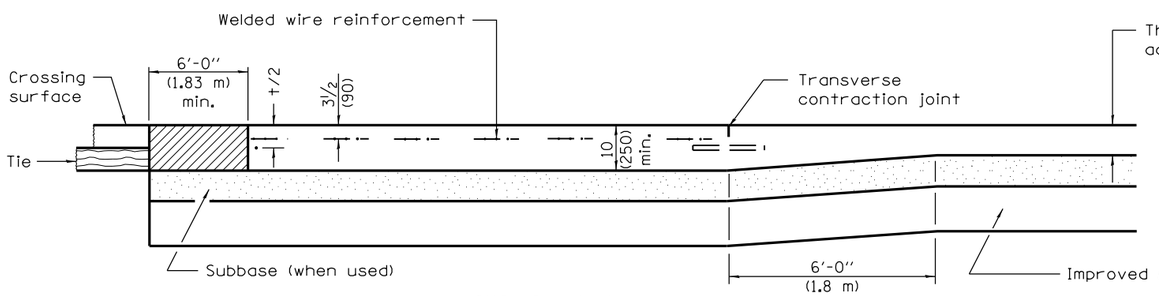


**SECTION A–A**
(FOR PCC PAVEMENT)

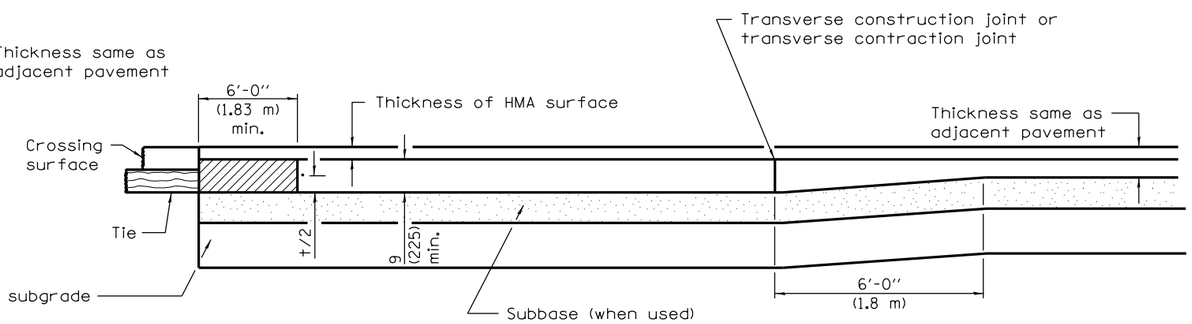


**SECTION A–A**
(FOR PCC BASE COURSE WITH HMA SURFACE)

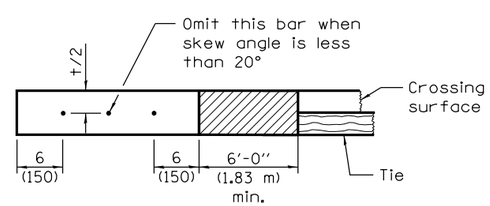


**SECTION B–B**

## GENERAL NOTES

See Standard 420001 for joint details not shown.

All dimensions are in inches (millimeters) unless otherwise shown.

Illinois Department of Transportation

PASSED April 1, 2016
ENGINEER OF POLICY AND PROCEDURES
APPROVED April 1, 2016
ENGINEER OF DESIGN AND ENVIRONMENT

ISSUED 1-1-97

| DATE | REVISIONS |
|---|---|
| 4-1-16 | Changed terminology to |
| | 'welded wire reinforcement'. |
| | |
| 1-1-15 | Increased with of HMA |
| | plugs to 6'-0" (1.83 m) |
| | minimum. |

# PCC PAVEMENT AND PCC BASE COURSE ADJACENT TO RAILROAD GRADE CROSSING

**STANDARD 420501–06**

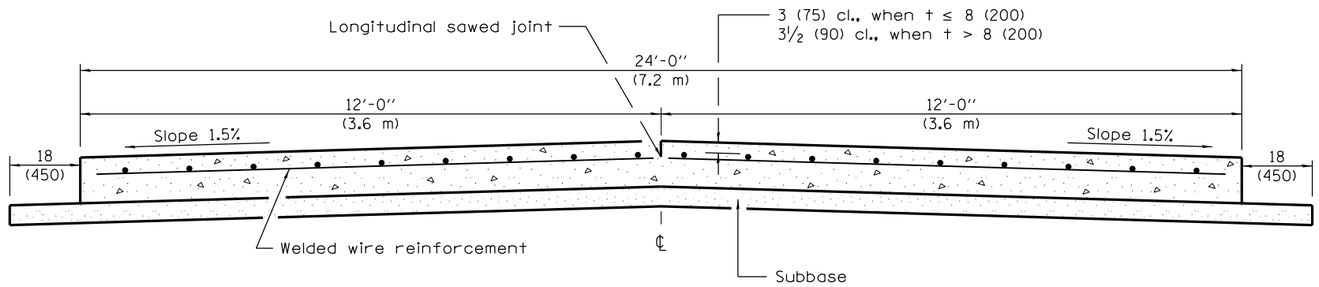


**SECTION A–A**
(TYPICAL 2-LANE WITH SHOULDERS)

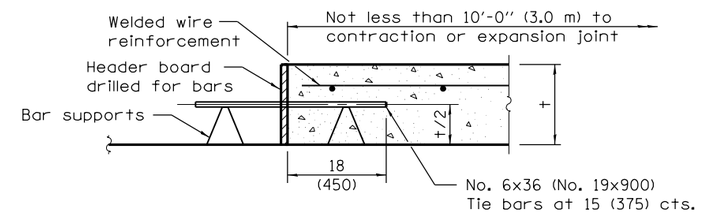


**TRANSVERSE CONSTRUCTION JOINT**

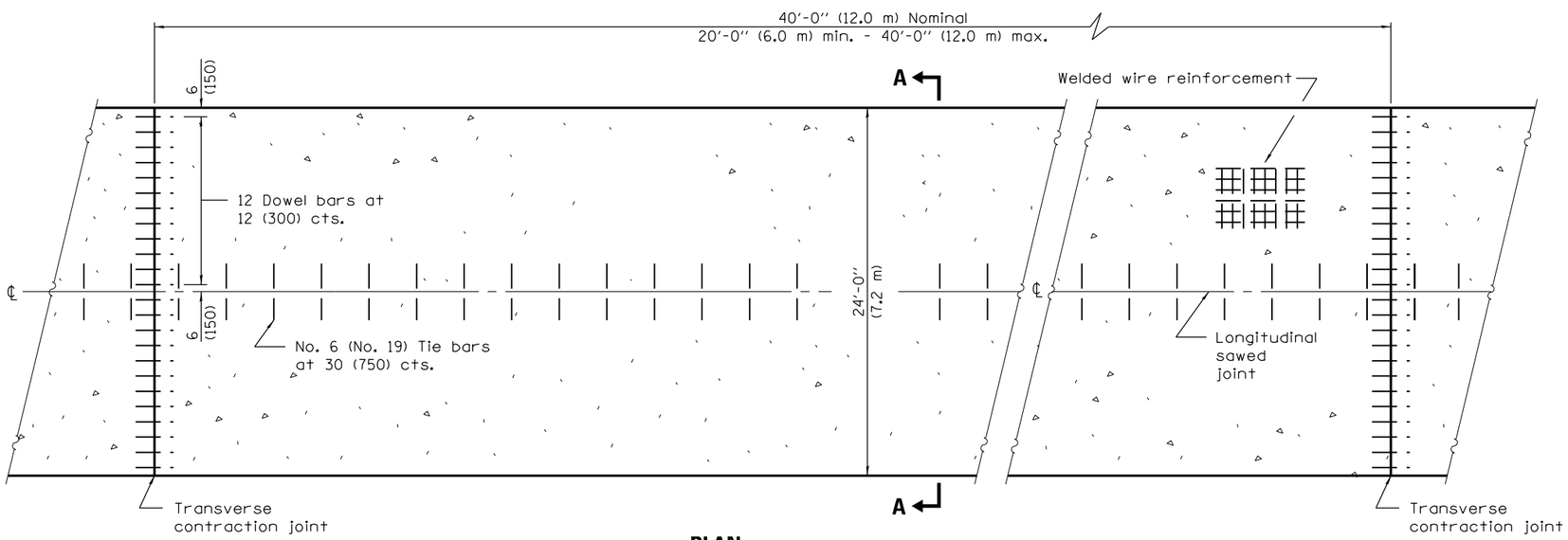


**PLAN**

## GENERAL NOTES

See Standard 420001 for details not shown.

See Standard 420701 for welded wire reinforcement details.

All dimensions are in inches (millimeters) unless otherwise shown.

Illinois Department of Transportation

PASSED April 1, 2016
Michael Brand
ENGINEER OF POLICY AND PROCEDURES
APPROVED April 1, 2016
ENGINEER OF DESIGN AND ENVIRONMENT

ISSUED 1-1-97

| DATE | REVISIONS |
|---|---|
| 4-1-16 | Changed terminology to |
| | 'welded wire reinforcement'. |
| | |
| 1-1-08 | Switched units to |
| | English (metric). |
| | |

# 24' (7.2 m) PCC PAVEMENT

**STANDARD 420601–06**

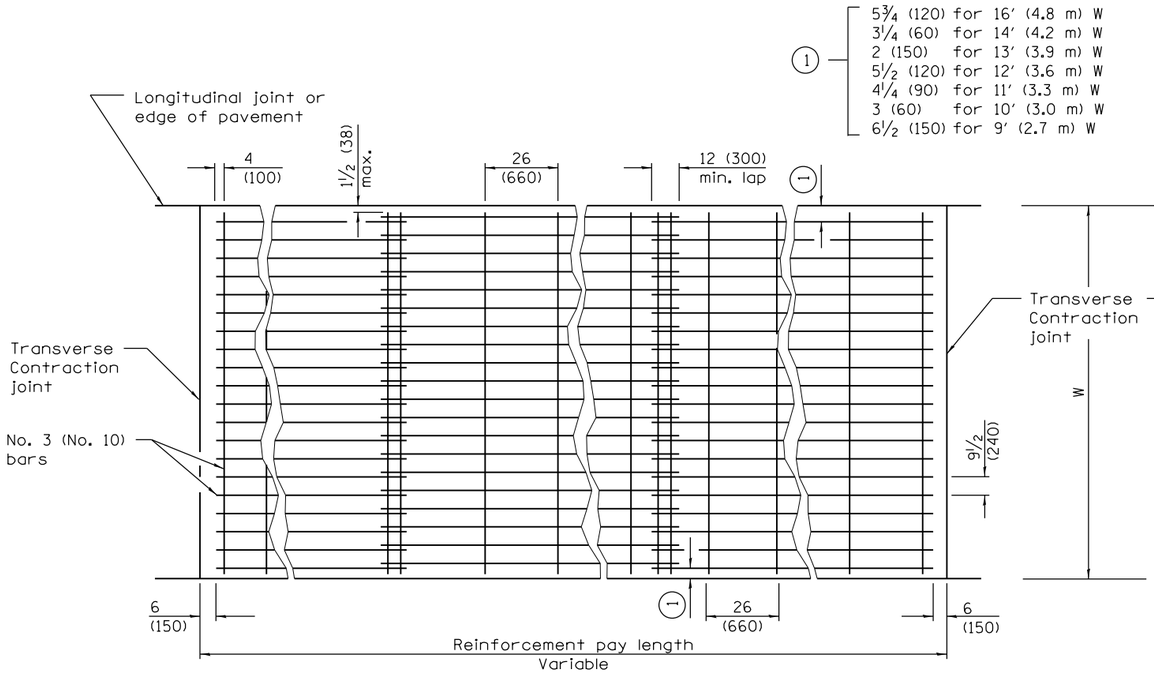


Approximately 63 lbs./100 sq. ft. (3.07 kg/m²)

When clipped bar mats are used, each bar intersection shall be clipped with W1.7 (3.74) wire.

## TYPE B

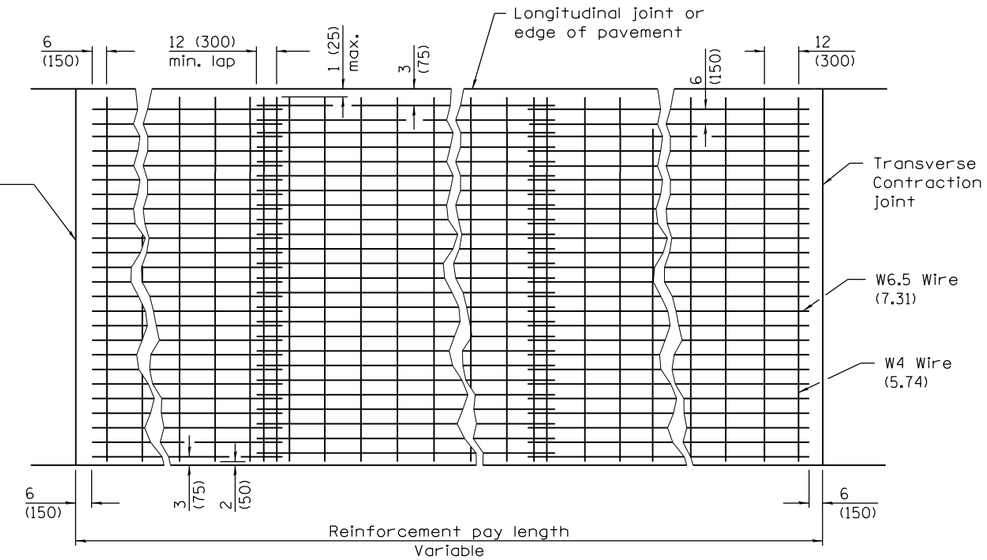


Approximately 63 lbs./100 sq. ft. (3.07 kg/m²)

## TYPE A

- When the 12 (300) minimum cannot be achieved, the transverse joints shall be extended to either the longitudinal joint or edge of pavement.

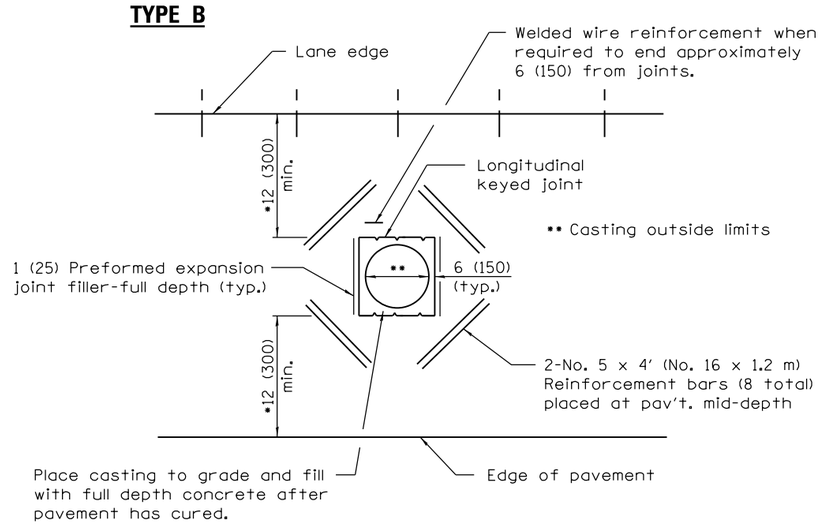


## DETAIL OF ADDED REINFORCEMENT FOR PAVEMENT BLOCKS-OUTS

## GENERAL NOTES

Pavement block-outs shall be at least 24 (600) from contraction joints.

Welded wire reinforcement which is lapped longitudinallyshall have a minimum lap of 6 (150).

Welded wire reinforcement may be positioned with the transverse wires on top or bottom of the longitudinal wires.

All dimensions are in inches (millimeters) unless otherwise shown.

Illinois Department of Transportation

PASSED April 1, 2016
Michael Brand
ENGINEER OF POLICY AND PROCEDURES
APPROVED April 1, 2016
ENGINEER OF DESIGN AND ENVIRONMENT

ISSUED 1-1-97

| DATE | REVISIONS |
|---|---|
| 4-1-16 | Changed terminology to |
| | 'welded wire reinforcement'. |
| | Renamed standard. |
| 1-1-08 | Switched units to |
| | English (metric). |
| | |

# PAVEMENT WELDED WIRE REINFORCEMENT

STANDARD 420701-03

## LAP DETAIL I

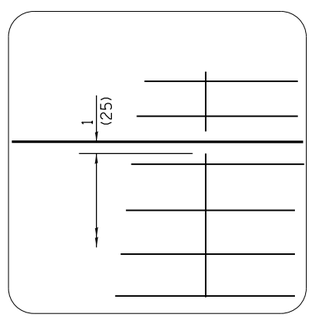


## DETAIL A

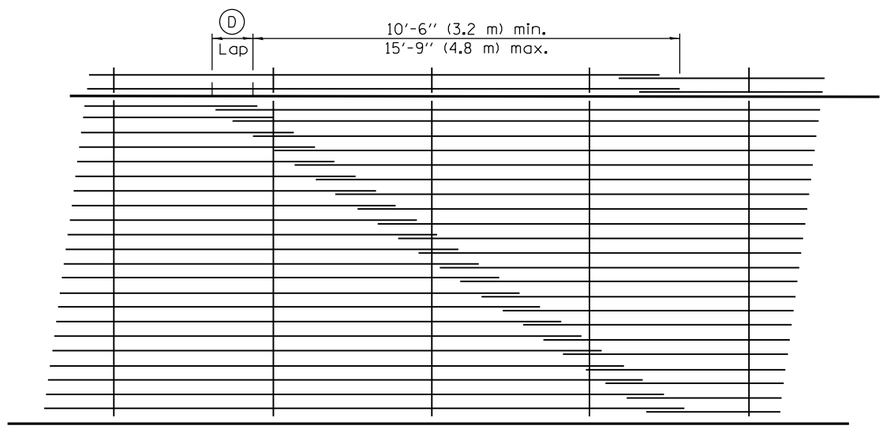


## LAP DETAIL II

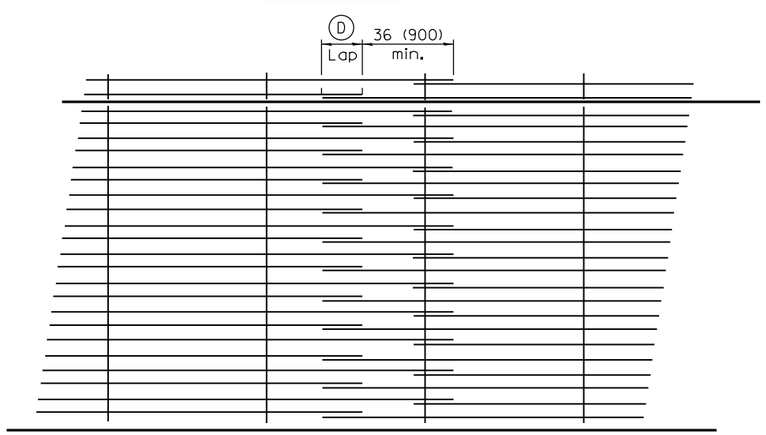


## LAP DETAIL III

| ENGLISH (inches) | | | | | |
|---|---|---|---|---|---|
| Bar Size | Pavement Thickness | Ⓐ (Approx. Spacing) | Ⓑ | Ⓒ | Ⓓ |
| #6 | 7¾ thru 8½ | 18 spaces (19 bars) @ 7⅝ | 3½ | 3 | 22 |
| #6 | 8¾ thru 9½ | 20 spaces (21 bars) @ 6⅞ | 3½ | 3 | 22 |
| #6 | 9¾ thru 10½ | 22 spaces (23 bars) @ 6¼ | 3½ | 3 | 22 |
| #6 | 10¾ thru 11½ | 24 spaces (25 bars) @ 5¾ | 3½ | 3 | 22 |
| #6 | 11¾ thru 12½ | 27 spaces (28 bars) @ 5⅛ | 3½ | 3 | 22 |
| #7 | 9¾ thru 10½ | 16 spaces (17 bars) @ 8⅝ | 3½ | 3 | 26 |
| #7 | 10¾ thru 11½ | 18 spaces (19 bars) @ 7⅝ | 3½ | 3 | 26 |
| #7 | 11¾ thru 12½ | 19 spaces (20 bars) @ 7¼ | 3½ | 3 | 26 |
| #7 | 12¾ thru 13½ | 21 spaces (22 bars) @ 6½ | 3½ | 3 | 26 |
| #7 | 13¾ thru 14½ | 23 spaces (24 bars) @ 6 | 3½ | 3 | 26 |
| #7 | 14¾ thru 15½ | 24 spaces (25 bars) @ 5¾ | 3½ | 3 | 26 |
| #7 | 15¾ thru 16½ | 26 spaces (27 bars) @ 5¼ | 3½ | 3 | 26 |

| METRIC (mm) | | | | | |
|---|---|---|---|---|---|
| Bar Size | Pavement Thickness | Ⓐ (Approx. Spacing) | Ⓑ | Ⓒ | Ⓓ |
| #19 | 200 thru 220 | 18 spaces (19 bars) @ 191 | 90 | 75 | 560 |
| #19 | 230 thru 250 | 21 spaces (22 bars) @ 163 | 95 | 80 | 560 |
| #19 | 260 thru 280 | 23 spaces (24 bars) @ 149 | 90 | 80 | 560 |
| #19 | 290 thru 310 | 26 spaces (27 bars) @ 132 | 90 | 75 | 560 |
| #19 | 320 thru 340 | 29 spaces (30 bars) @ 118 | 95 | 80 | 560 |
| #22 | 230 thru 250 | 15 spaces (16 bars) @ 229 | 90 | 75 | 660 |
| #22 | 260 thru 280 | 17 spaces (18 bars) @ 202 | 90 | 75 | 660 |
| #22 | 290 thru 310 | 19 spaces (20 bars) @ 181 | 90 | 70 | 660 |
| #22 | 320 thru 340 | 21 spaces (22 bars) @ 163 | 95 | 80 | 660 |
| #22 | 350 thru 370 | 23 spaces (24 bars) @ 149 | 90 | 80 | 660 |
| #22 | 380 thru 400 | 25 spaces (26 bars) @ 137 | 95 | 80 | 660 |
| #22 | 410 thru 430 | 27 spaces (28 bars) @ 127 | 90 | 80 | 660 |

## GENERAL NOTES

Except as noted or shown, the dimensions and notes specified for LAP DETAIL I are typical for LAP DETAIL II and III.

The Ⓑ dimension and the distance from the end of the transverse bar to the edge of pavement may be increased by 1 (25) for slip form paving.

The minimum length of longitudinal bars shall be 30' (9 m) except as required to establish the lap arrangement selected.

All dimensions are in inches (millimeters) unless otherwise shown.

Illinois Department of Transportation

PASSED April 1, 2016
Michael Brand
ENGINEER OF POLICY AND PROCEDURES
APPROVED April 1, 2016
ENGINEER OF DESIGN AND ENVIRONMENT

ISSUED 1-1-97

| DATE | REVISIONS |
|---|---|
| 4-1-16 | Revised general notes |
| | with respect to 30' |
| | bar length. |
| 1-1-08 | Switched units to |
| | English (metric). |
| | |

# BAR REINFORCEMENT FOR CRC PAVEMENT

STANDARD 421001–03

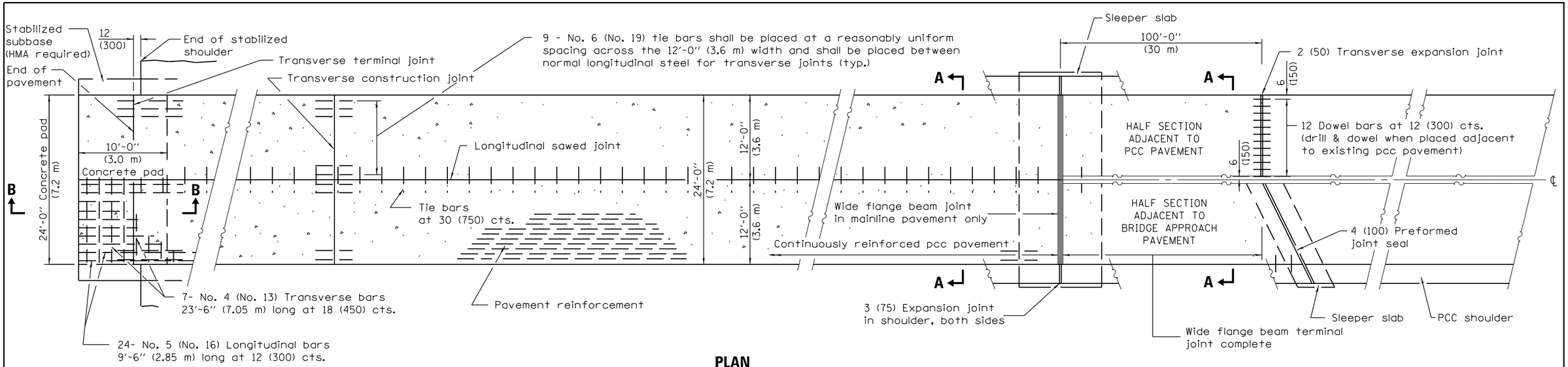


**PLAN**

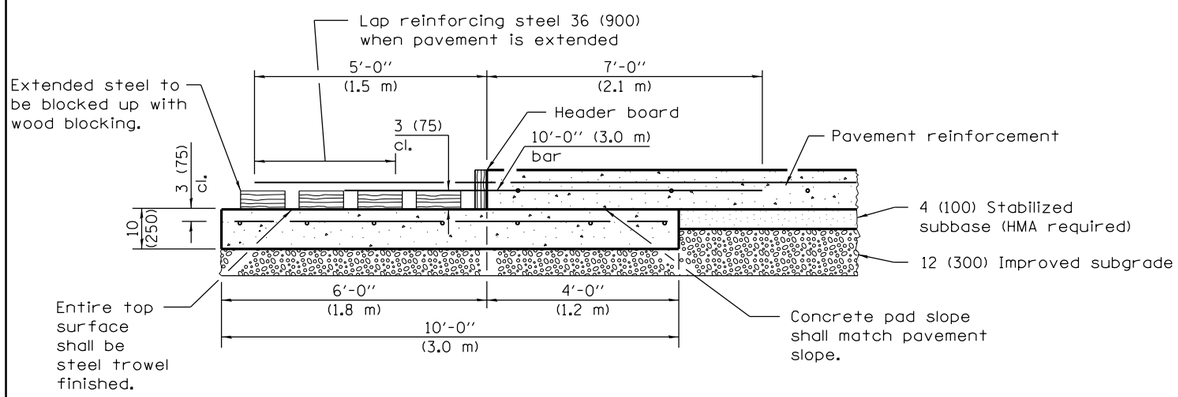


**TRANSVERSE TERMINAL JOINT**
**SECTION B–B**

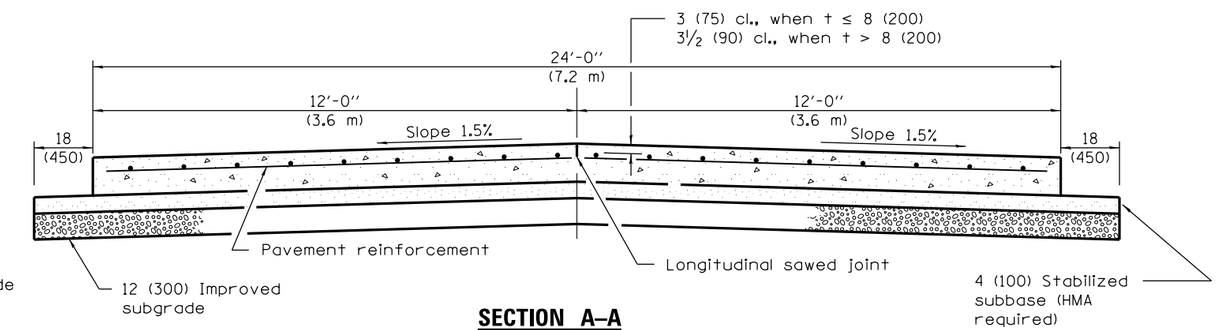


**SECTION A–A**
(TYPICAL 2-LANE WITH SHOULDERS)

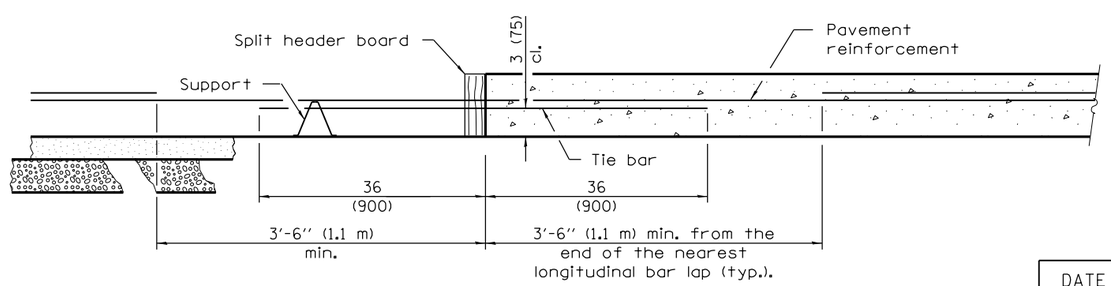


**TRANSVERSE CONSTRUCTION JOINT**

## GENERAL NOTES

Sealant components for the wide flange beam terminal joint shall be as follows: The sealant shall be Dow Corning 888 Silicone Highway Joint Sealant. The tape shall be Polyethylene Tape No. 40. The primer, used on the metal only, shall be Dow Corning 1200. At the Contractor's option the joint may be sealed as shown in the optional groove detail.

See Standards 420001 and 420401 for joint details not shown.

See Standard 421001 for details of pavement reinforcement.

All dimensions are in inches (millimeters) unless otherwise shown.

Illinois Department of Transportation

PASSED January 1, 2014
Michael Brand
ENGINEER OF POLICY AND PROCEDURES
APPROVED January 1, 2014
ENGINEER OF DESIGN AND ENVIRONMENT

ISSUED 1-1-97

| DATE | REVISIONS |
|---|---|
| 1-1-14 | Added exp. jnts. in shlds. & |
| | omitted bars, cnst. jnt. over |
| | wide flange beam slpr slab. |
| 1-1-11 | Corrected weld symbol on |
| | OPTIONAL ADJUSTABLE CHAIR |
| | detail. |

# 24' (7.2 m)
# CRC PAVEMENT
(WITH WIDE FLANGE BEAM TERMINAL JOINT)
(Sheet 1 of 2)

**STANDARD 421101–09**

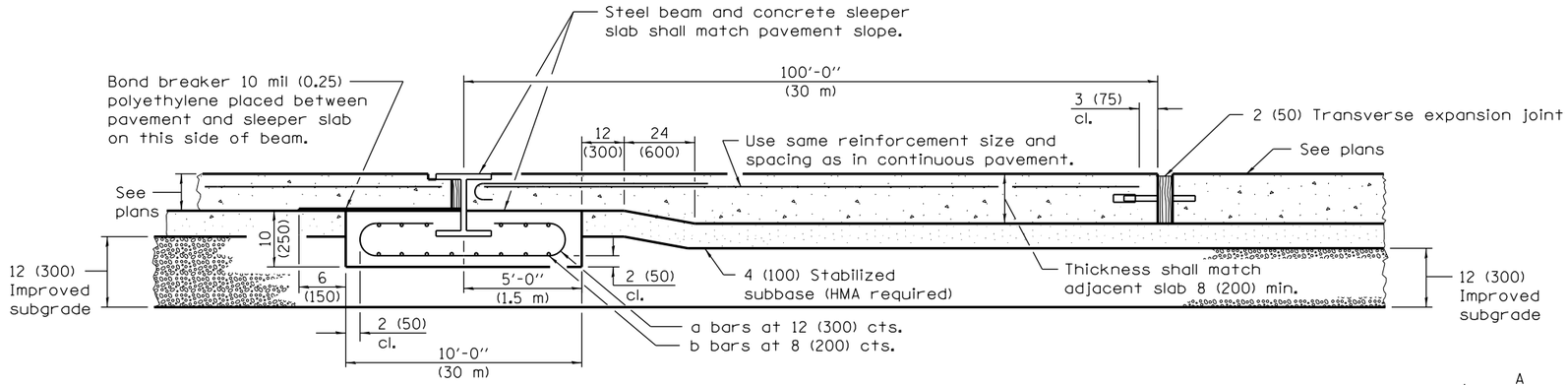


## WIDE FLANGE BEAM TERMINAL JOINT

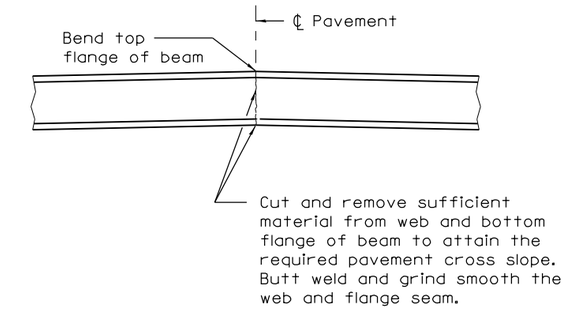


## DETAIL OF CUTTING AND WELDING BEAM

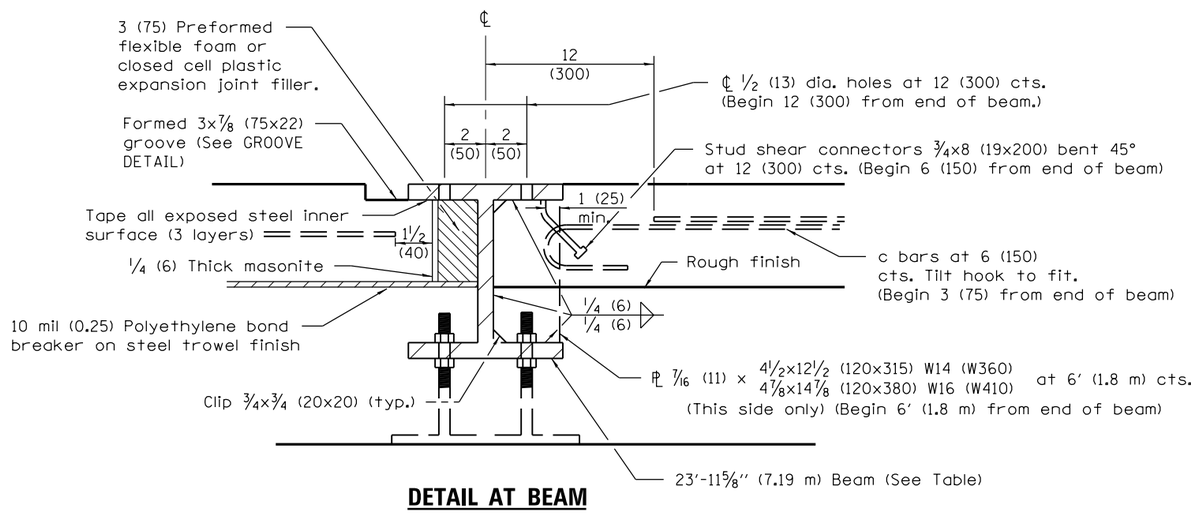


## DETAIL AT BEAM

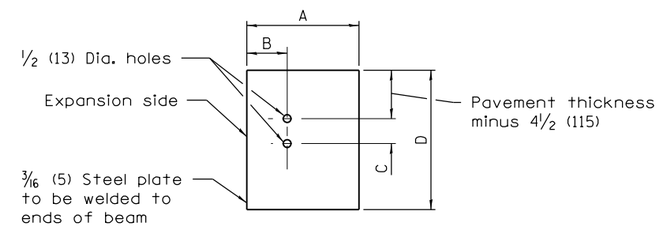


## END PLATE

| PAVEMENT THICKNESS | <10 (250) | ≥ 10 (250) |
|---|---|---|
| BEAM SIZE | W14x82 (W360x122) | W16x100 (W410x1149) |
| A | 10 1/8 (255) | 10 3/8 (265) |
| B | 4 5/16 (110) | 4 7/16 (115) |
| C | 3 (75) | 4 (100) |
| D | 14 1/4 (360) | 17 (430) |

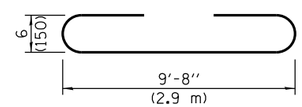


## BAR a

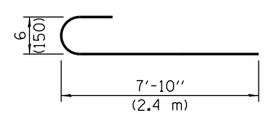


## BAR c

MATERIALS REQUIRED FOR ONE TRANSVERSE TERMINAL JOINT COMPLETE

| | |
|---|---|
| Concrete, cu. yds. ($m^3$) | 7.4 (5.4) |
| Reinforcement bars, lbs. (kg) | 348 (160) |
| Pavement reinforcement, sq. yds. ($m^2$) | 13.3 (10.8) |

MATERIALS REQUIRED FOR ONE WIDE FLANGE BEAM TERMINAL JOINT COMPLETE

| Bar | No. | Size | Length | Shape |
|---|---|---|---|---|
| a | 24 | No. 4 (No. 13) | 19'-0" (5.8 m) | |
| b | 29 | No. 5 (No. 16) | 23'-8" (7.1 m) | |
| c | 48 | No. 6 (No. 19) | 8'-6" (2.6 m) | |

| | |
|---|---|
| Concrete, cu. yds. ($m^3$) | 7.4 (5.4) |
| Reinforcement Bars, lbs. (kg) | 1635 (740) |
| Structural Steel, lbs. (kg) | W14 (W360) 2025• (906•) |
| | W16 (W410) 2466• (1104•) |

•Weight includes beam, end plates, stiffener plates and studs.

| | |
|---|---|
| Pavement, sq. yds. ($m^2$) | 266.7 (216) |
| Pavement Reinforcement, sq. yds. ($m^2$) | 266.7 (216) |
| Stabilized Subbase, sq. yds. ($m^2$) | 285 (230.8) |
| Improved Subgrade, sq. yds. ($m^2$) | 300 (243) |

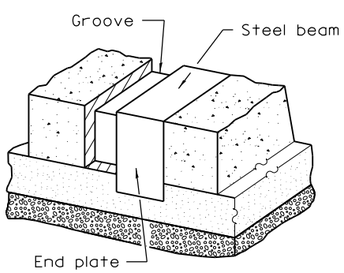


## VIEW OF GROOVE AT EDGE OF PAVEMENT

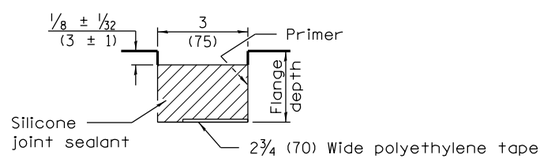


## GROOVE DETAIL

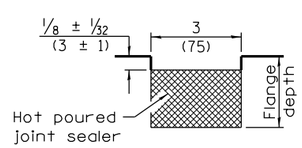


## GROOVE DETAIL (OPTIONAL)

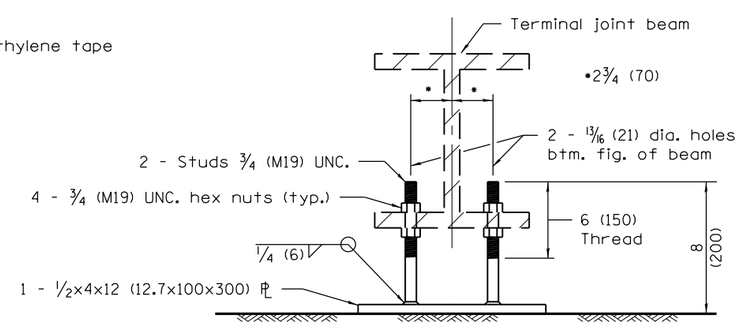


## OPTIONAL ADJUSTABLE CHAIR

Illinois Department of Transportation

PASSED January 1. 2014

ENGINEER OF POLICY AND PROCEDURES

APPROVED January 1. 2014

ENGINEER OF DESIGN AND ENVIRONMENT

ISSUED 1-1-97

# 24' (7.2 m) CRC PAVEMENT

(WITH WIDE FLANGE BEAM TERMINAL JOINT)

(Sheet 2 of 2)

**STANDARD 421101–09**

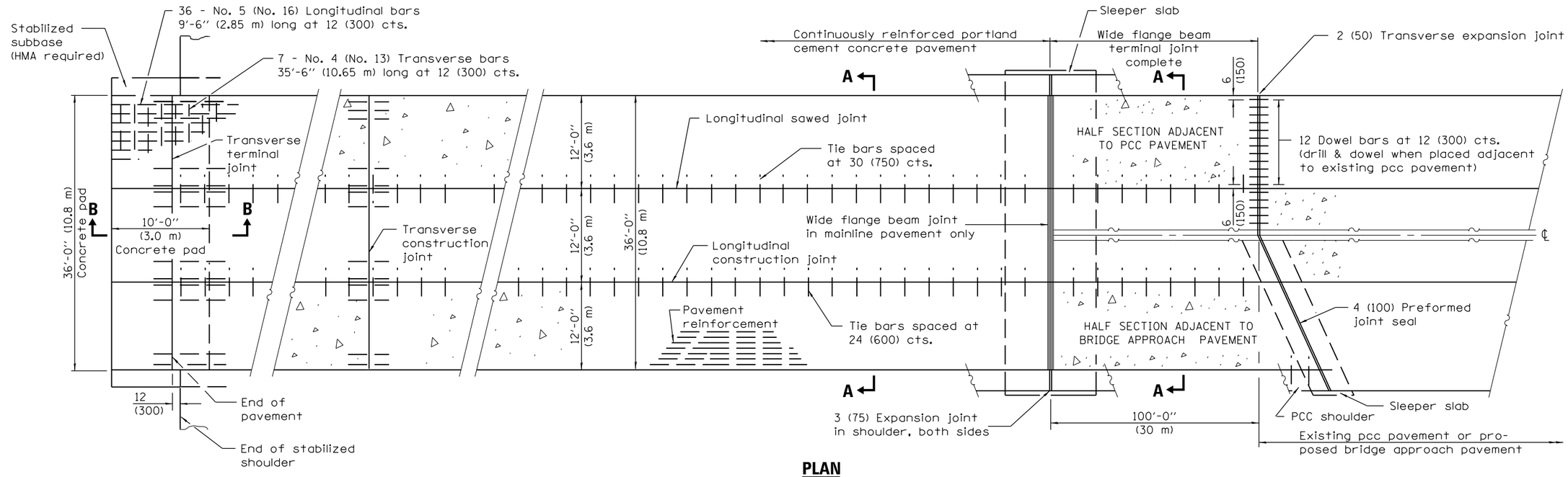


## PLAN

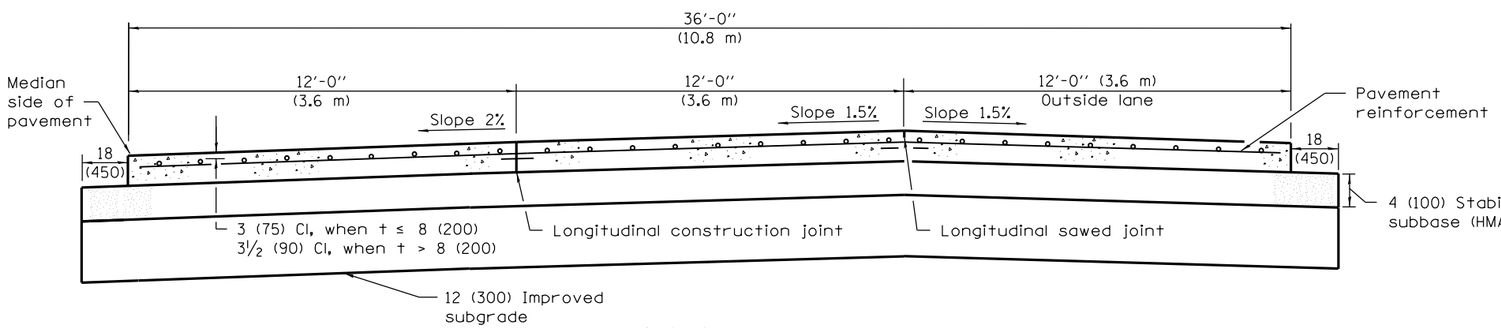


## SECTION A–A

(TYPICAL 3-LANE, 1-WAY WITH SHOULDERS)

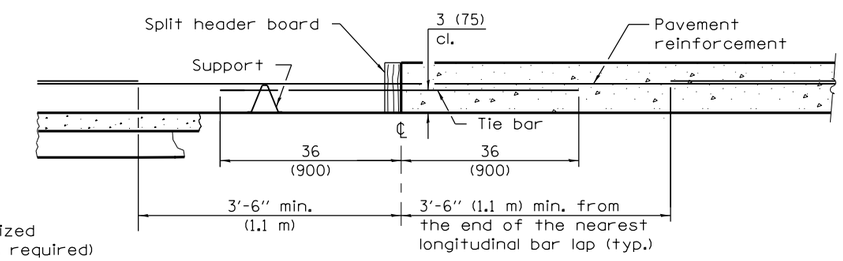


## TRANSVERSE CONSTRUCTION JOINT

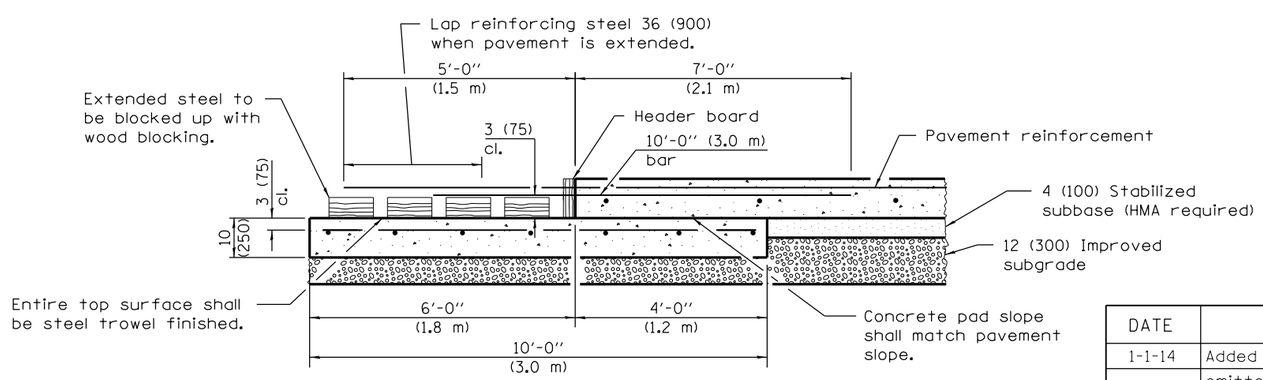


## TRANSVERSE TERMINAL JOINT SECTION B–B

## GENERAL NOTES

Sealant components for the wide flange beam terminal joint shall be as follows: The sealant shall be Dow Corning 888 Silicone Highway Joint Sealant. The tape shall be Polyethylene Tape No. 40. The primer, used on the metal only, shall be Dow Corning 1200. At the Contractor's option the joint may be sealed as shown in the optional groove detail.

See Standard 421001 for details of pavement reinforcement.

See Standards 420001 and 420401 for joint details not shown.

All dimensions shall be in inches (millimeters) unless otherwise shown.

Illinois Department of Transportation

PASSED January 1, 2014
Michael Brand
ENGINEER OF POLICY AND PROCEDURES
APPROVED January 1, 2014
ENGINEER OF DESIGN AND ENVIRONMENT

ISSUED 1-1-97

| DATE | REVISIONS |
|---|---|
| 1-1-14 | Added exp. jnts. in shlds. & |
| | omitted bars, cnst. jnt. over |
| | wide flange beam slpr. slab. |
| 1-1-11 | Corrected weld symbol on |
| | OPTIONAL ADJUSTABLE CHAIR |
| | detail. |

# 36' (10.8 m) CRC PAVEMENT

(WITH WIDE FLANGE BEAM TERMINAL JOINT)

(Sheet 1 of 2)

**STANDARD 421106–09**

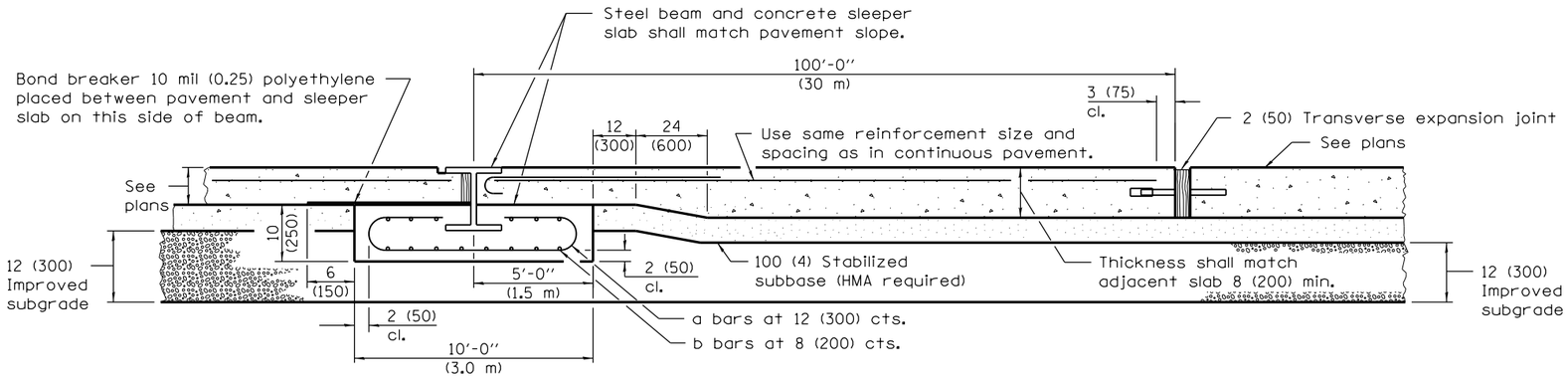


## WIDE FLANGE BEAM TERMINAL JOINT

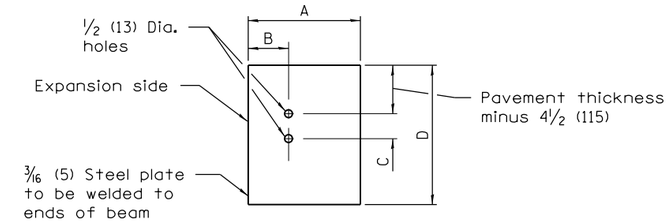


## END PLATE

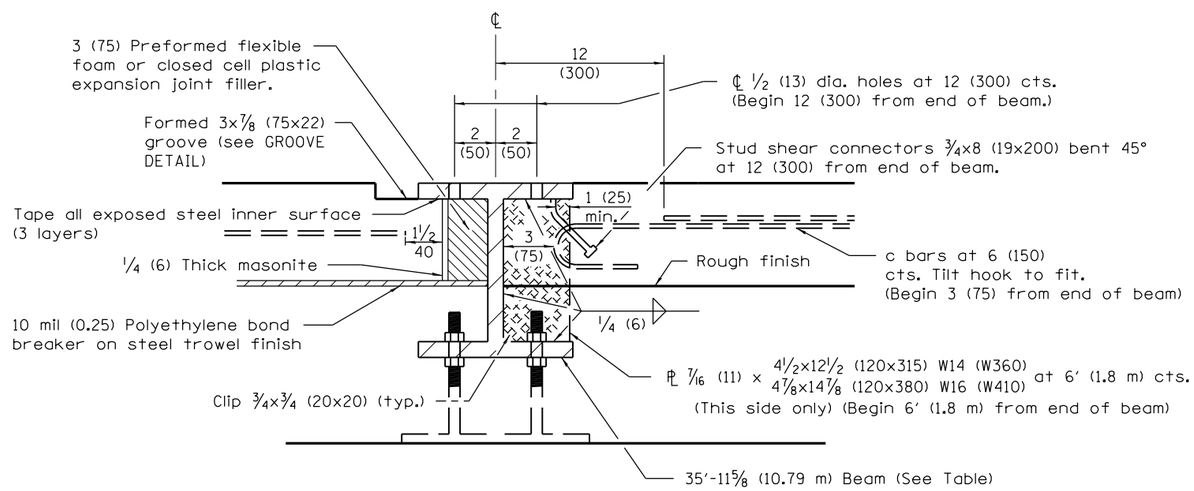


## DETAIL AT BEAM

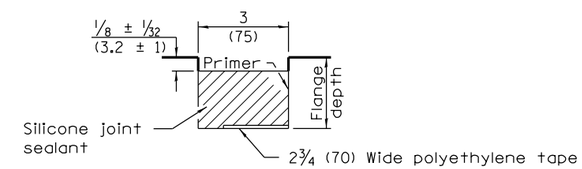


## GROOVE DETAIL

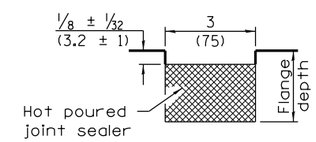


## GROOVE DETAIL (OPTIONAL)

| PAVEMENT THICKNESS | < 10 (250) | ≥ 10 (250) |
|---|---|---|
| BEAM SIZE | W14X82 (W360X122) | w16x100 (W410x149) |
| A | 10 1/8 (255) | 10 3/8 (265) |
| B | 4 5/16 (110) | 4 7/16 (115) |
| C | 3 (75) | 4 (100) |
| D | 14 1/4 (360) | 17 (430) |

MATERIALS REQUIRED FOR ONE TRANSVERSE TERMINAL JOINT COMPLETE

| | |
|---|---|
| Concrete, cu. yds. ($m^3$) | 11.1 (8.1) |
| Reinforcement bars, lbs. (kg) | 523 (235) |
| Pavement reinforcement, sq. yds. ($m^2$) | 20 (16.2) |

MATERIALS REQUIRED FOR ONE WIDE FLANGE BEAM TERMINAL JOINT COMPLETE

| Bar | No. | Size | Length | Shape |
|---|---|---|---|---|
| a | 36 | No. 4 (No. 13) | 19′-0″ (5.8 m) | |
| b | 29 | No. 5 (No. 16) | 35′-8″ (10.7 m) | |
| c | 72 | No. 6 (No. 19) | 8′-6″ (2.6 m) | |

| | | |
|---|---|---|
| Concrete, cu. yds. ($m^3$) | | 11.1 (8.1) |
| Reinforcement Bars, lbs. (kg) | | 2455 (1115) |
| Structural Steel, lbs. (kg) | W14 (W360) | 3040 (1360) |
| | W16 (W410) | 3710 (1655) |

• Weight includes beam, end plates, stiffener plates and studs.

| | |
|---|---|
| Pavement, sq. yds. ($m^2$) | 400 (324) |
| Pavement Reinforcement, sq. yds. ($m^2$) | 400 (324) |
| 4 (100) Stabilized Subbase, sq. yds. ($m^2$) | 411.6 (333.5) |
| Improved Subgrade, sq. yds. ($m^2$) | 433.3 (351) |

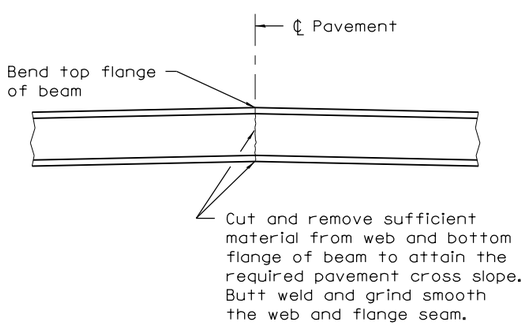


## DETAIL OF CUTTING AND WELDING BEAM

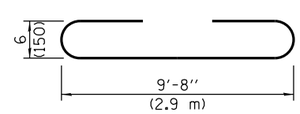


## BAR a

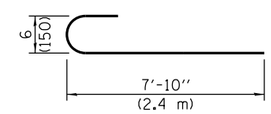


## BAR c

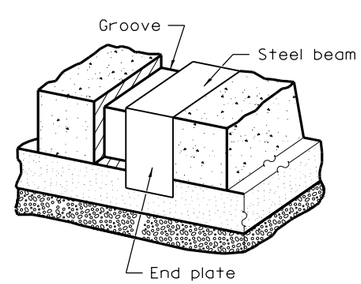


## VIEW OF GROOVE AT EDGE OF PAVEMENT

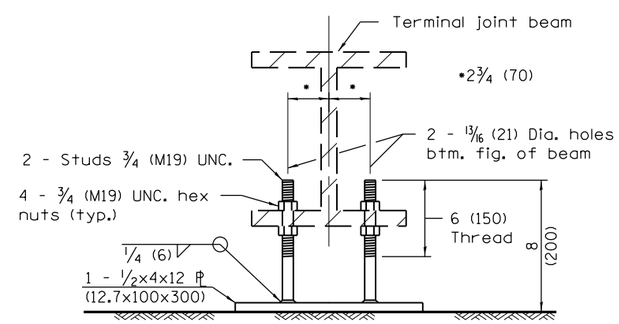


## OPTIONAL ADJUSTABLE CHAIR

Illinois Department of Transportation

PASSED January 1. 2014
ENGINEER OF POLICY AND PROCEDURES
APPROVED January 1. 2014
ENGINEER OF DESIGN AND ENVIRONMENT

ISSUED 1-1-97

# 36′ (10.8 m) CRC PAVEMENT

(WITH WIDE FLANGE BEAM TERMINAL JOINT)

(Sheet 2 of 2)

**STANDARD 421106–09**

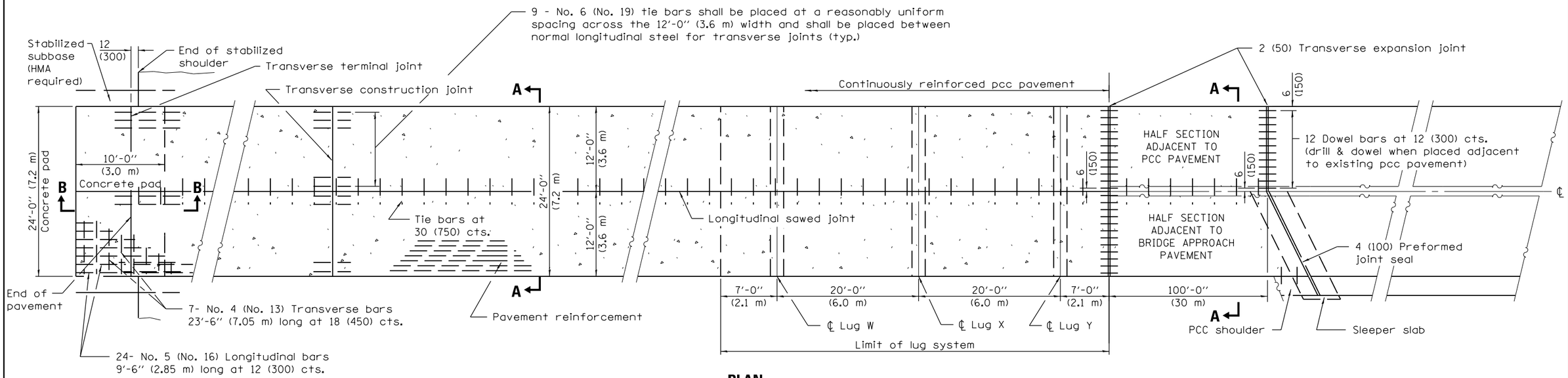


**PLAN**

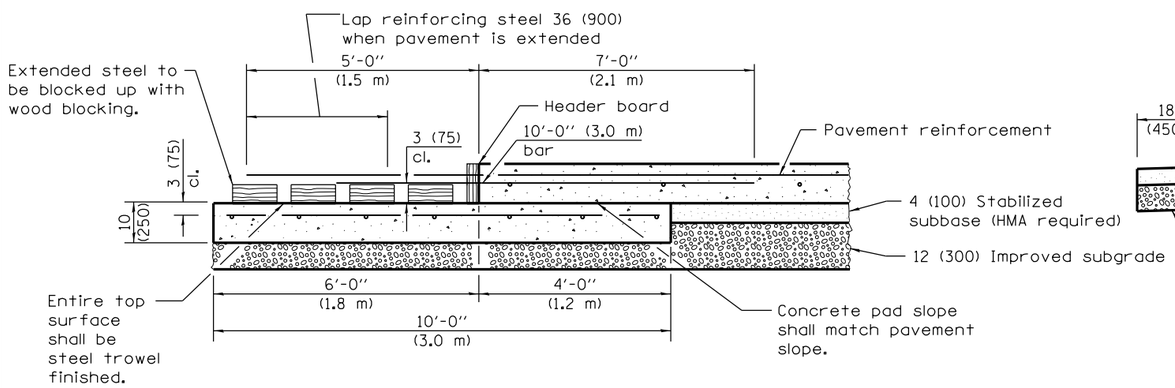


**TRANSVERSE TERMINAL JOINT**
**SECTION B–B**

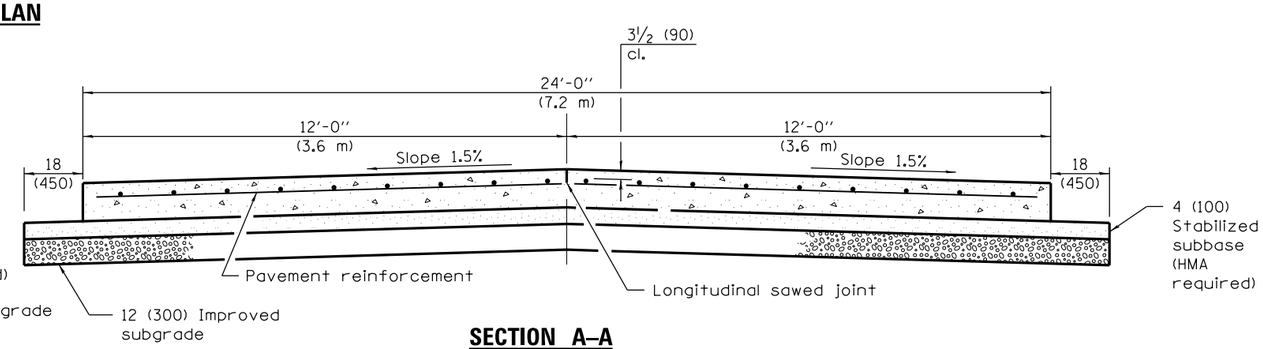


**SECTION A–A**
(TYPICAL 2-LANE WITH SHOULDERS)

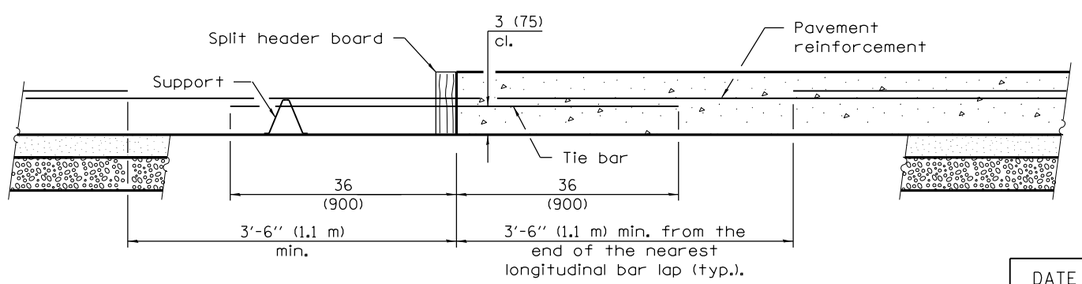


**TRANSVERSE CONSTRUCTION JOINT**

## GENERAL NOTES

See Standard 421001 for details of pavement reinforcement.

See Standards 420001 and 420401 for joint details not shown.

All dimensions are in inches (millimeters) unless otherwise shown.

Illinois Department of Transportation

PASSED January 1. 2008
ENGINEER OF POLICY AND PROCEDURES
APPROVED January 1. 2008
ENGINEER OF DESIGN AND ENVIRONMENT

ISSUED 1-1-97

| DATE | REVISIONS |
|---|---|
| 1-1-08 | Switched units to |
| | English (metric). Revised |
| | Lug. Sys. Table. |
| 1-1-07 | Switched to Hot-Mix |
| | Asphalt (HMA) |
| | terminology. |

# 24' (7.2 m)
# CRC PAVEMENT
(WITH LUG SYSTEM)

(Sheet 1 of 2)

**STANDARD 421201–06**

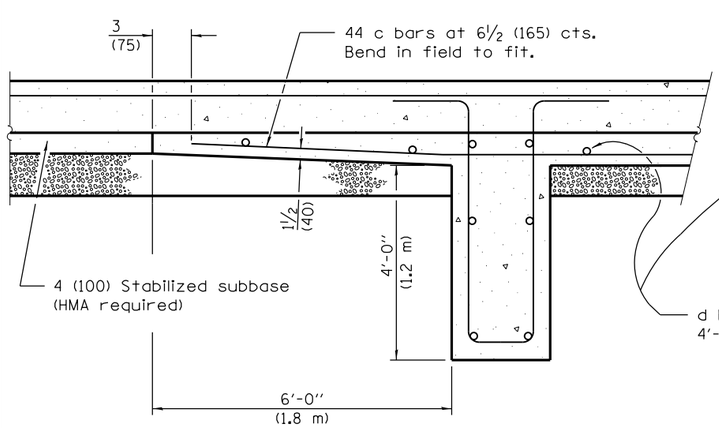


**SECTION AT LUG W**

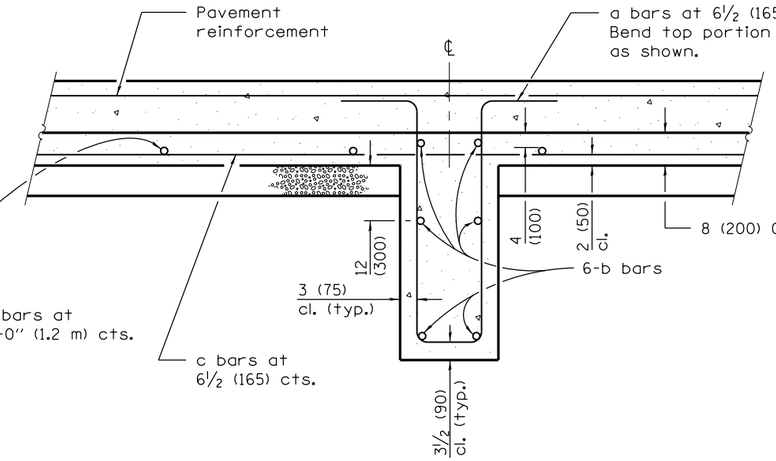


**SECTION AT LUG X**

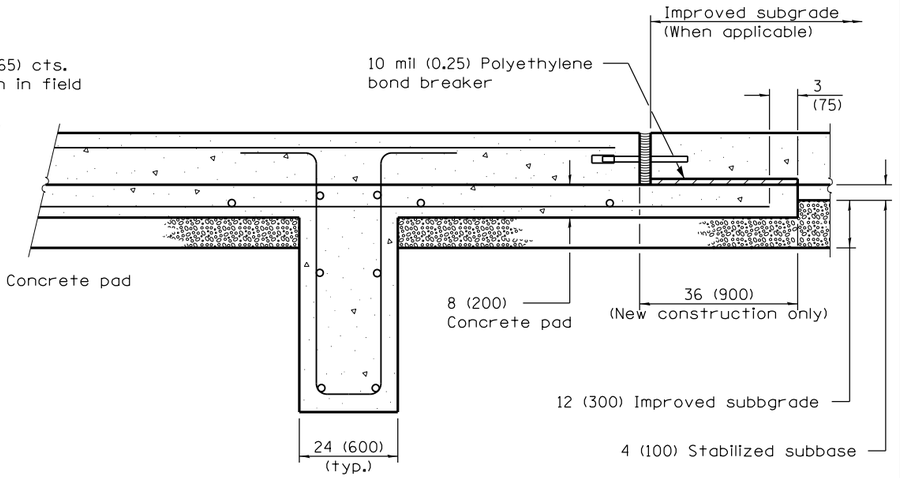


**SECTION AT LUG Y**

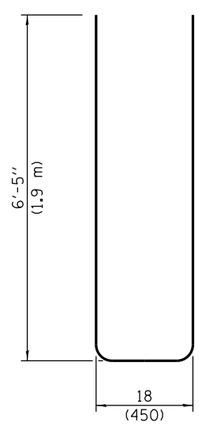


**BAR a**

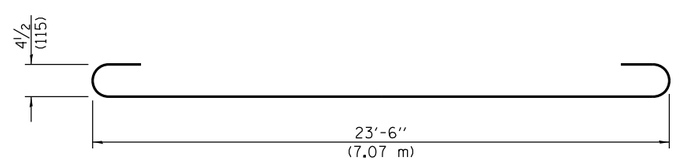


**BAR b**

MATERIALS REQUIRED FOR (1) ONE
LUG SYSTEM
(Excluding Pavement Concrete
and Pavement Reinforcement)

| Bar | Qty. | Size | Length | Shape |
|---|---|---|---|---|
| a | 132 | No. 8 (No. 25) | 14'-0" (4.25 m) | |
| b | 18 | No. 5 (No. 16) | 24'-9" (7.43 m) | |
| c | 132 | No. 5 (No. 16) | 20'-0" (6.10 m) | |
| d | 28 | No. 4 (No. 13) | 11'-9" (3.52 m) | |

| | |
|---|---|
| Concrete, cu. yds. ($m^3$) | 64.0 (48.9) |
| Reinforcing Bars, lbs. (kg) | 8372 (3800) |
| Concrete Pad, sq. yds. ($m^2$) | 144 (120) |
| Improved Subgrade, sq. yds. ($m^2$) | 162 (135) |

Illinois Department of Transportation

PASSED January 1, 2008
ENGINEER OF POLICY AND PROCEDURES
APPROVED January 1, 2008
ENGINEER OF DESIGN AND ENVIRONMENT

ISSUED 1-1-97

# 24' (7.2 m)
# CRC PAVEMENT
(WITH LUG SYSTEM)

(Sheet 2 of 2)

**STANDARD 421201-06**

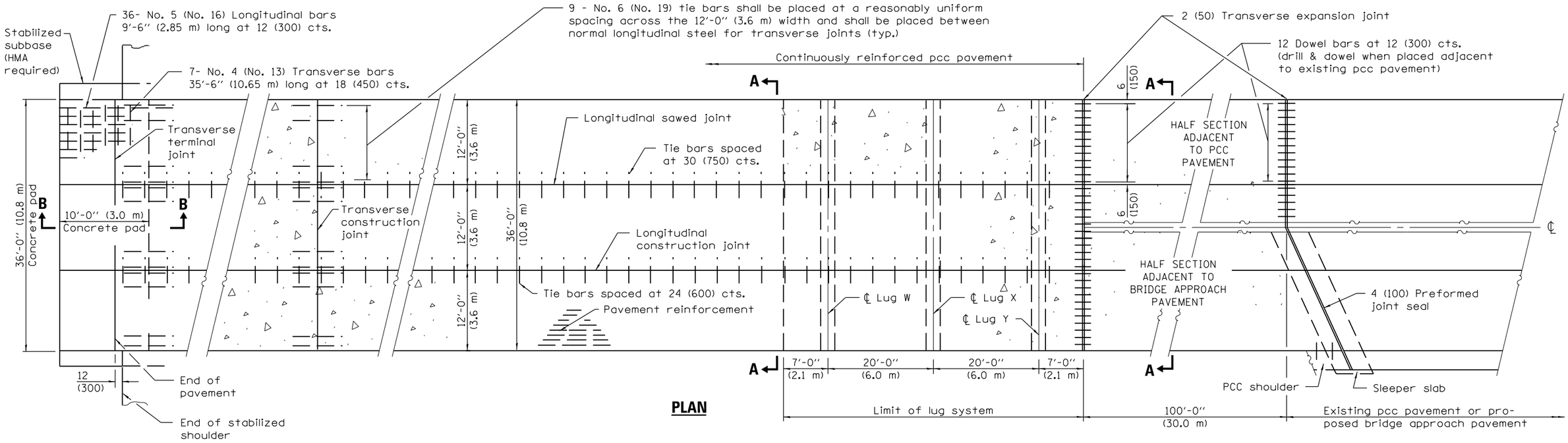


**PLAN**

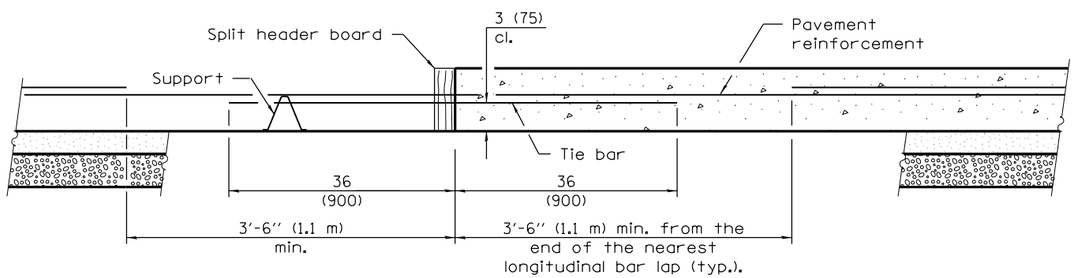


**TRANSVERSE CONSTRUCTION JOINT**

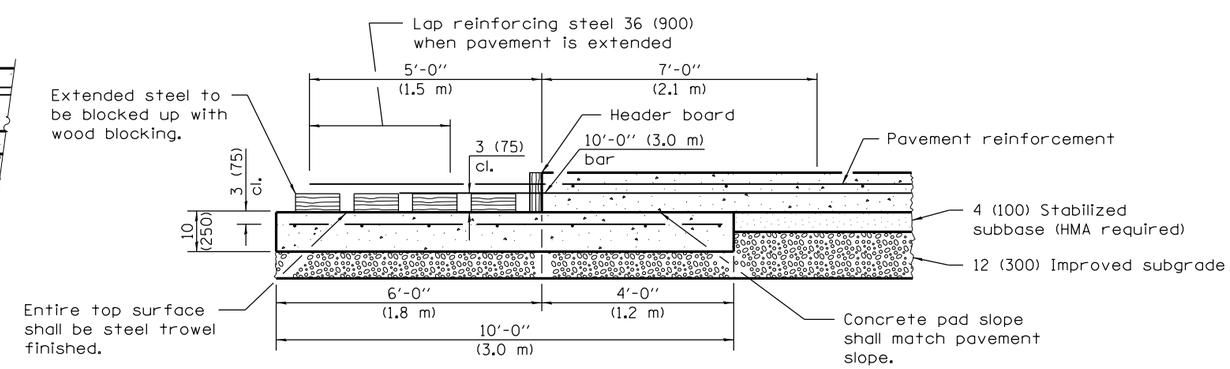


**TRANSVERSE TERMINAL JOINT**
**SECTION B–B**

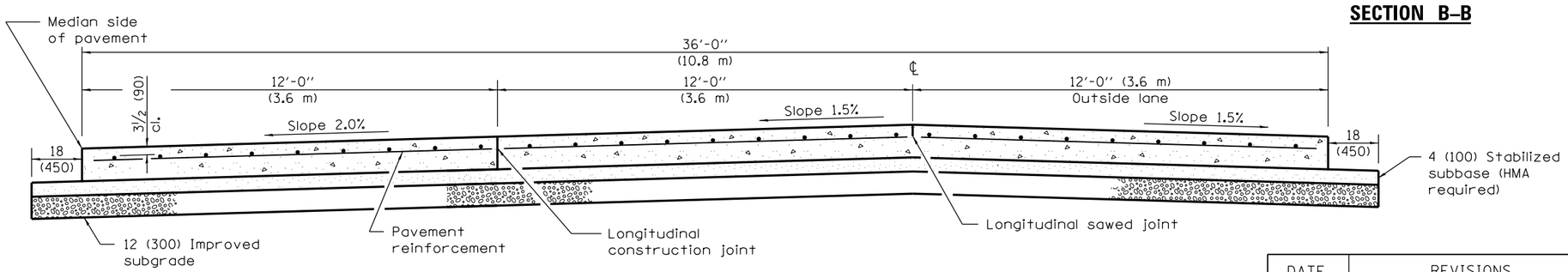


**SECTION A–A**
(TYPICAL 3-LANE, 1-WAY WITH SHOULDERS)

## GENERAL NOTES

See Standard 421001 for details of pavement reinforcement.

See Standards 420001 and 420401 for joint details not shown.

All dimensions are in inches (millimeters) unless otherwise shown.

Illinois Department of Transportation

PASSED January 1, 2008
ENGINEER OF POLICY AND PROCEDURES
APPROVED January 1, 2008
ENGINEER OF DESIGN AND ENVIRONMENT

ISSUED 1-1-97

| DATE | REVISIONS |
|---|---|
| 1-1-08 | Switched units to |
| | English (metric). Revised |
| | Lug Sys. Table. |
| 1-1-07 | Switched to Hot-Mix |
| | Asphalt (HMA) |
| | terminology. |

# 36' (10.8 m) CRC PAVEMENT
(WITH LUG SYSTEM)

(Sheet 1 of 2)

**STANDARD 421206–06**

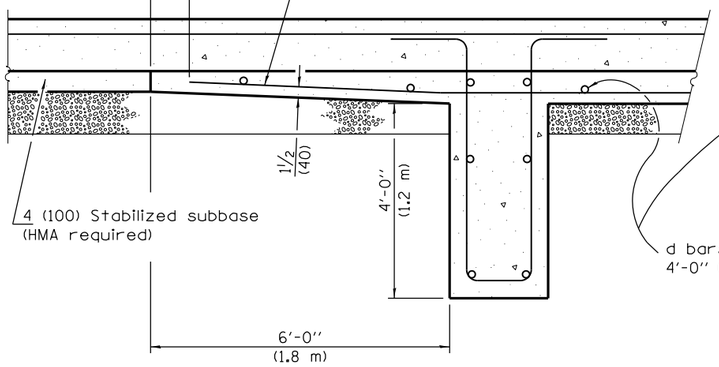


**SECTION AT LUG W**

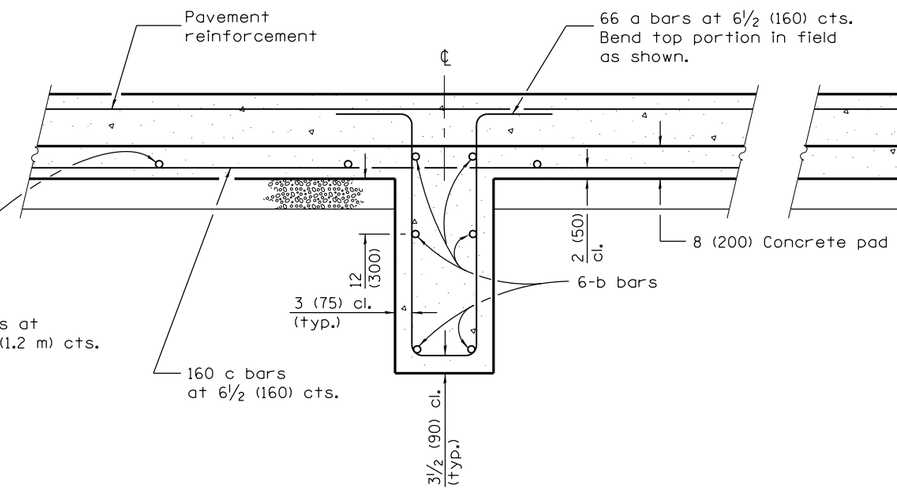


**SECTION AT LUG X**

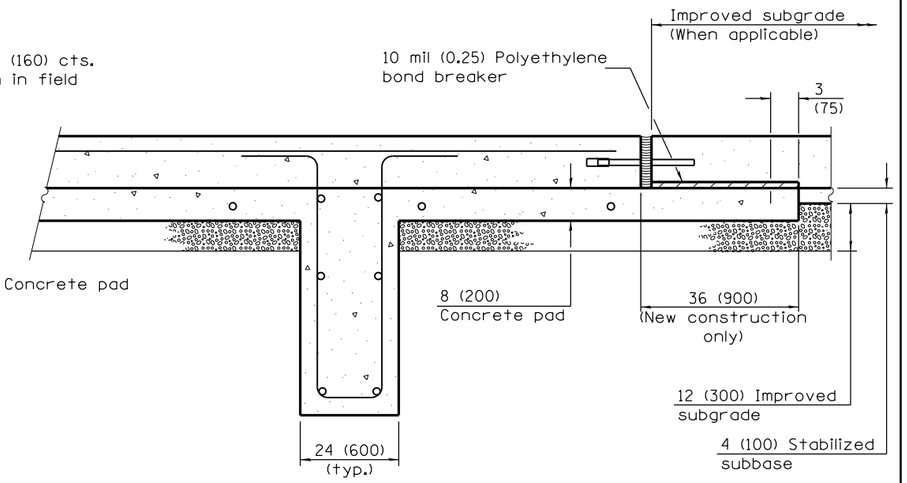


**SECTION AT LUG Y**

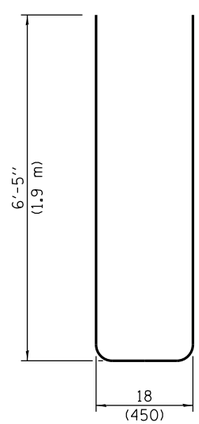


**BAR a**

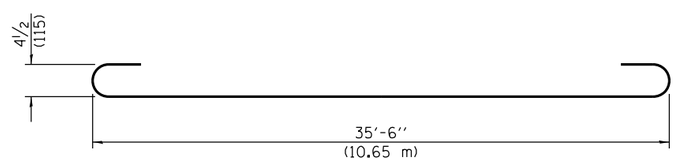


**BAR b**

MATERIALS REQUIRED FOR (1) ONE LUG SYSTEM
(Excluding Pavement Concrete and Pavement Reinforcement)

| Bar | No. | Size | Length | Shape |
|---|---|---|---|---|
| a | 198 | No. 8 (No. 25) | 14'-0" (4.25 m) | |
| b | 18 | No. 5 (No. 16) | 36'-9" (11.30 m) | |
| c | 198 | No. 5 (No. 16) | 20'-0" (6.10 m) | |
| d | 42 | No. 4 (No. 13) | 11'-9" (3.52 m) | |

| | |
|---|---|
| Concrete, cu. yds. ($m^3$) | 96.0 (73.4) |
| Reinforcing Bars, lbs. (kg) | 12,550 (5695) |
| Concrete Pad, sq. yds. ($m^2$) | 216 (181) |
| Improved Subgrade, sq. yds. ($m^2$) | 208 (174) |

Illinois Department of Transportation

PASSED January 1, 2008
ENGINEER OF POLICY AND PROCEDURES
APPROVED January 1, 2008
ENGINEER OF DESIGN AND ENVIRONMENT

ISSUED 1-1-97

# 36' (10.8 m)
# CRC PAVEMENT
(WITH LUG SYSTEM)

(Sheet 2 of 2)

**STANDARD 421206–06**

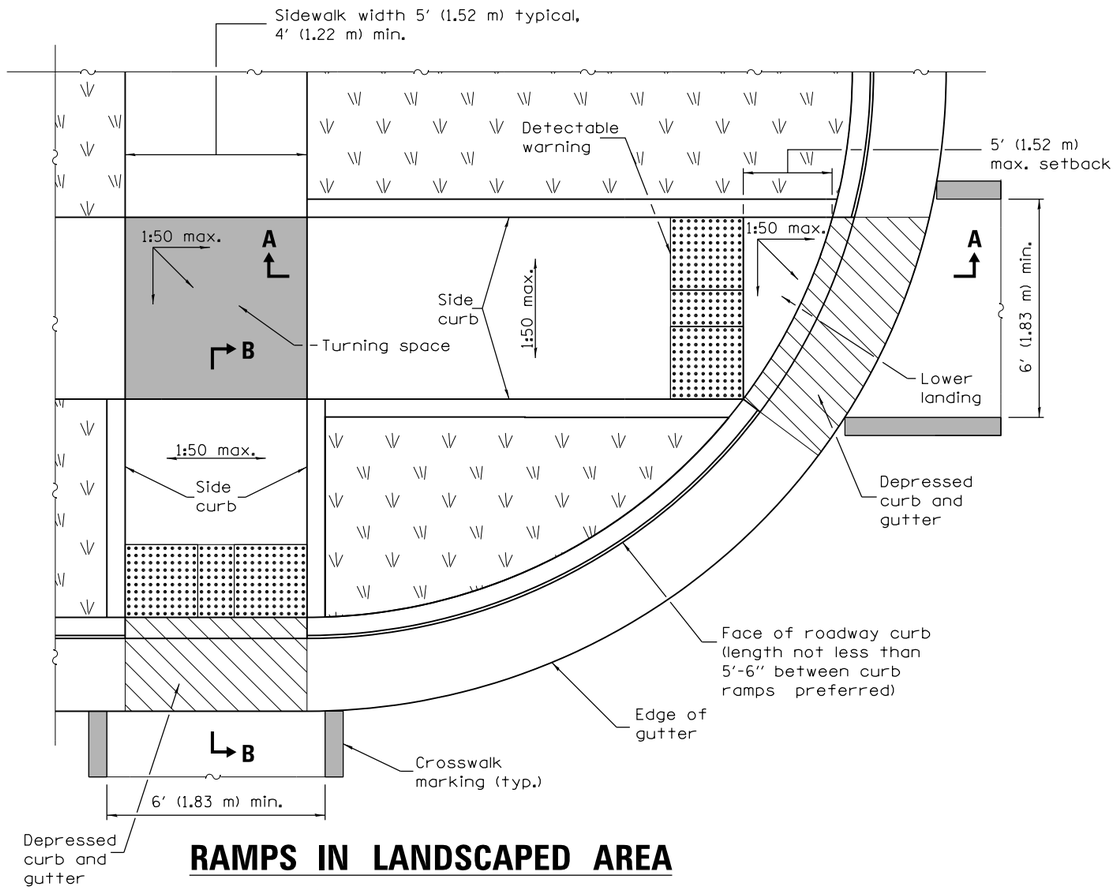


## RAMPS IN LANDSCAPED AREA

## SETBACK ≤ 5′

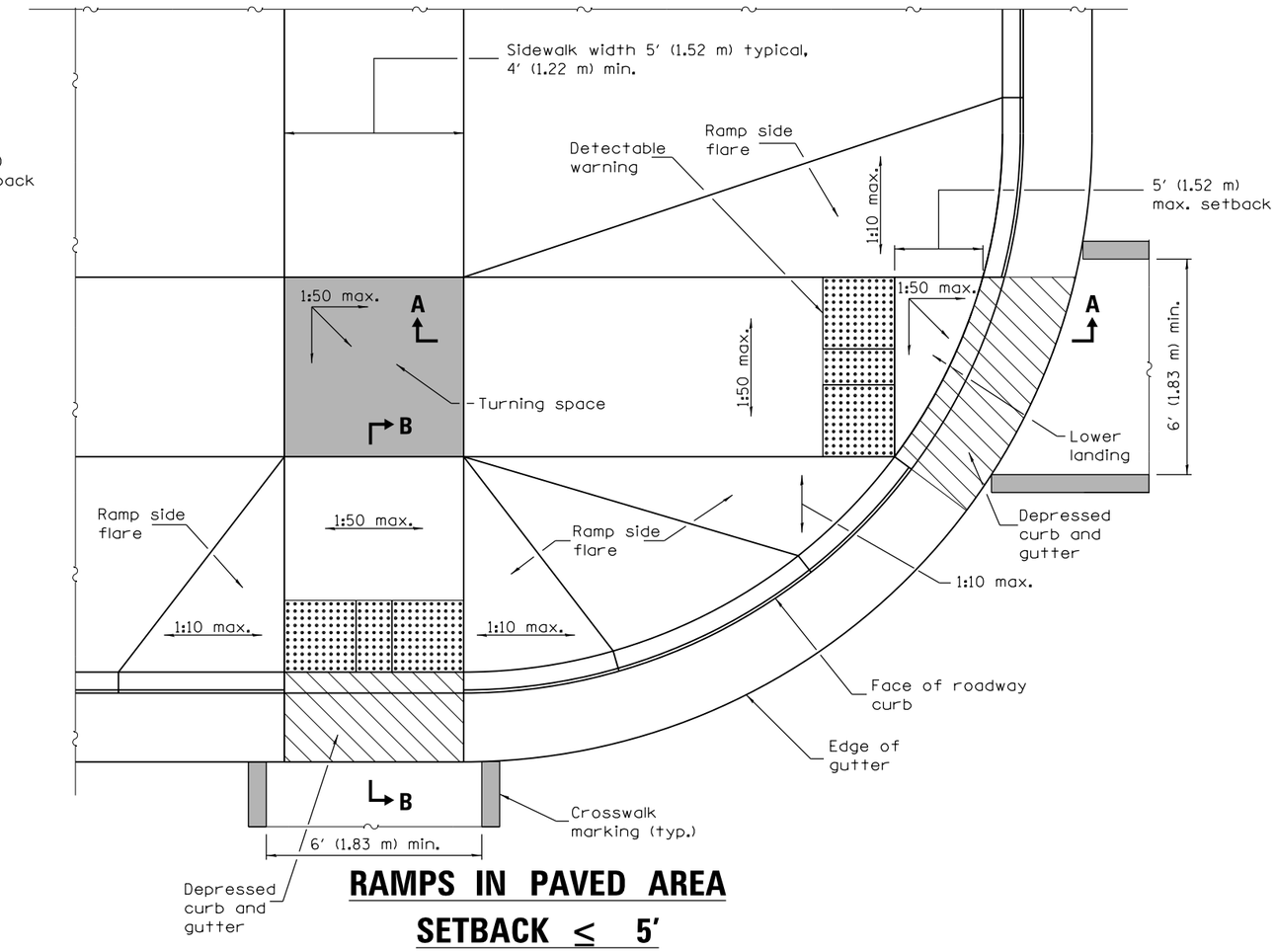


## RAMPS IN PAVED AREA

## SETBACK ≤ 5′

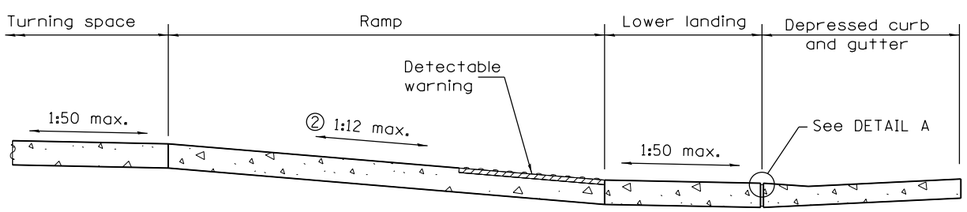


## SECTION A–A

② The running slope of the curb ramp shall not require the ramp length to exceed 15′ (4.5 m).

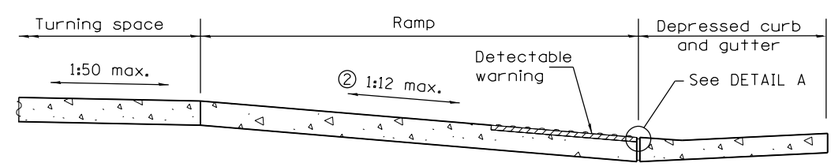


## SECTION B–B

② The running slope of the curb ramp shall not require the ramp length to exceed 15′ (4.5 m).

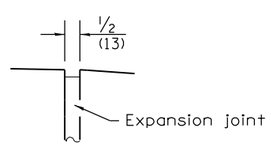


## DETAIL A

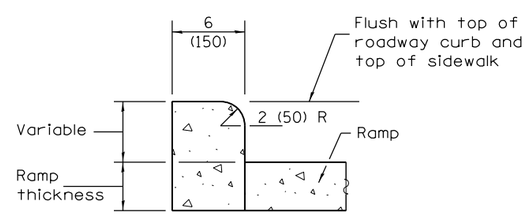


## SIDE CURB DETAIL

See Sheet 2 for GENERAL NOTES.

| DATE | REVISIONS |
|---|---|
| 1-1-15 | ① not appl. to int. sidewalks. |
| | Rev. gen. notes. Ch'd Upper |
| | landing to Turning space. |
| 1-1-13 | Widened crosswalk markings |
| | to 6′ (1.83 m) min. inside |
| | dimension. Rev. Gen. Notes. |

# PERPENDICULAR CURB RAMPS FOR SIDEWALKS

(Sheet 1 of 2)

**STANDARD 424001–08**

Illinois Department of Transportation

PASSED January 1, 2015

Michael Brand
ENGINEER OF POLICY AND PROCEDURES

APPROVED January 1, 2015

ENGINEER OF DESIGN AND ENVIRONMENT

ISSUED 1-1-97

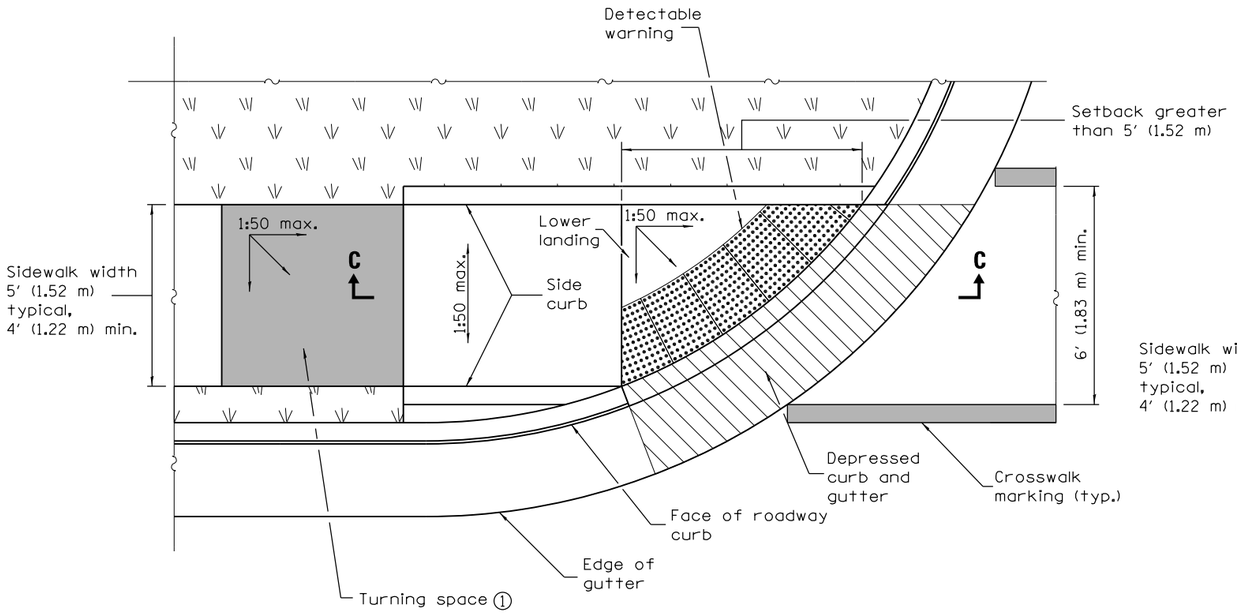


## RAMP IN LANDSCAPED AREA
## SETBACK > 5′

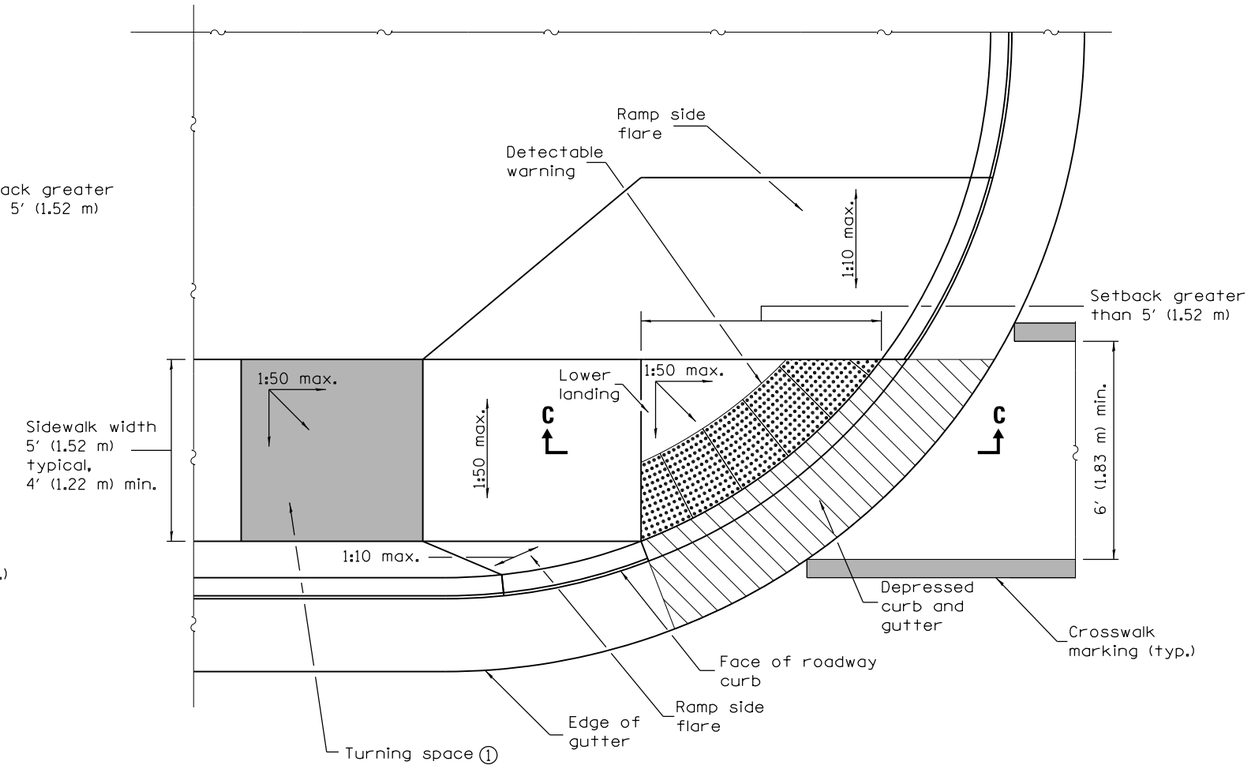


## RAMP IN PAVED AREA
## SETBACK > 5′

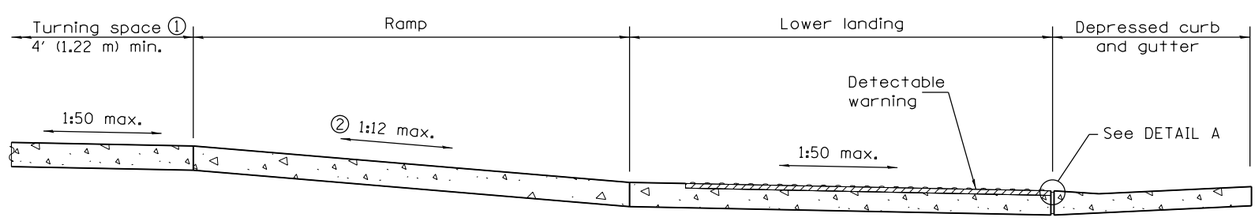


## SECTION C–C

① Turning space not required for ramp slopes flatter than 1:20.

② The running slope of the curb ramp shall not require the ramp length to exceed 15′ (4.5 m).

### GENERAL NOTES

All slope ratios are expressed as units of vertical displacement to units of horizontal displacement (V:H).

Where the turning space is constrained on a side opposite a ramp, the minimum length of the turning space in the direction of the ramp-run shall be 5′ (1.52 m).

Where 1:50 maximum slope is shown, 1:64 is preferred.

See Standard 606001 for details of depressed curb adjacent to curb ramp.

All dimensions are in inches (millimeters) unless otherwise shown.

Illinois Department of Transportation

PASSED January 1, 2015
Michael Brand
ENGINEER OF POLICY AND PROCEDURES
APPROVED January 1, 2015
ENGINEER OF DESIGN AND ENVIRONMENT

ISSUED 1-1-97

# PERPENDICULAR CURB RAMPS FOR SIDEWALKS

(Sheet 2 of 2)

STANDARD 424001–08

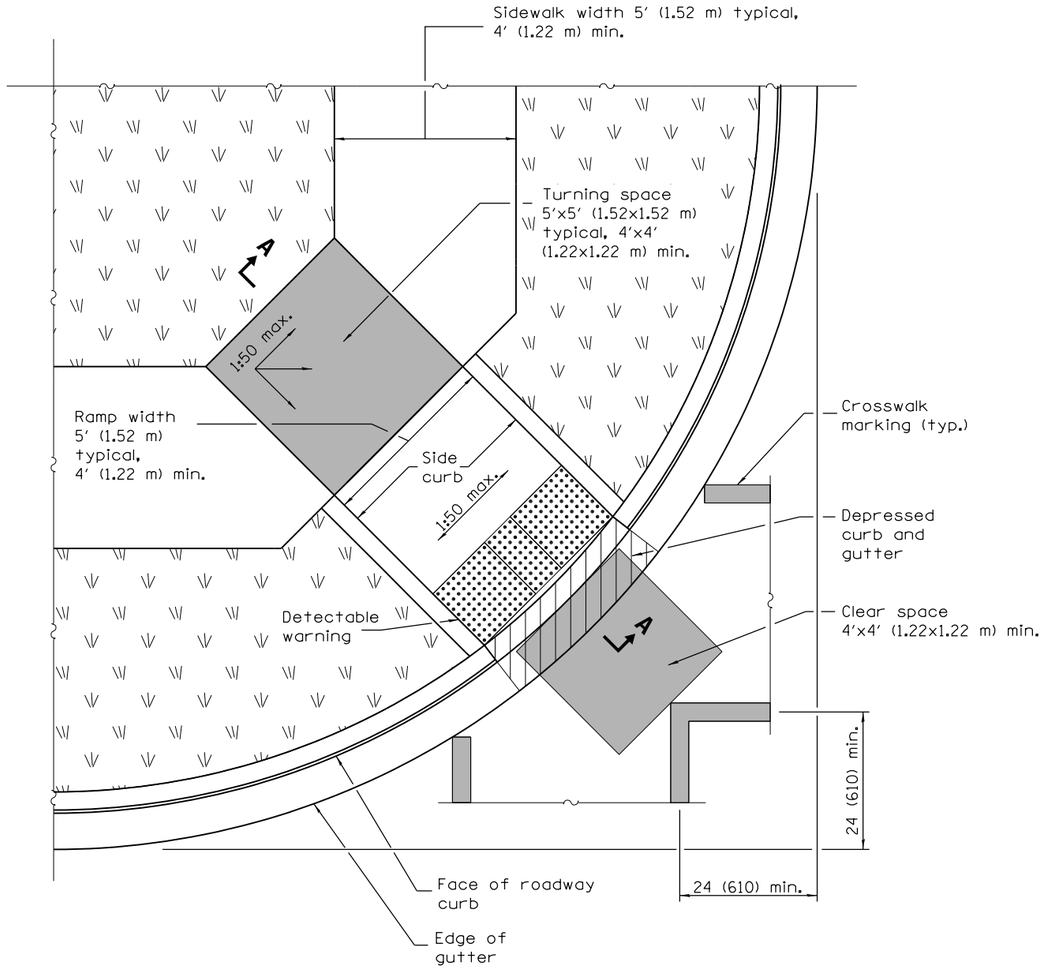


## RAMP IN LANDSCAPED AREA

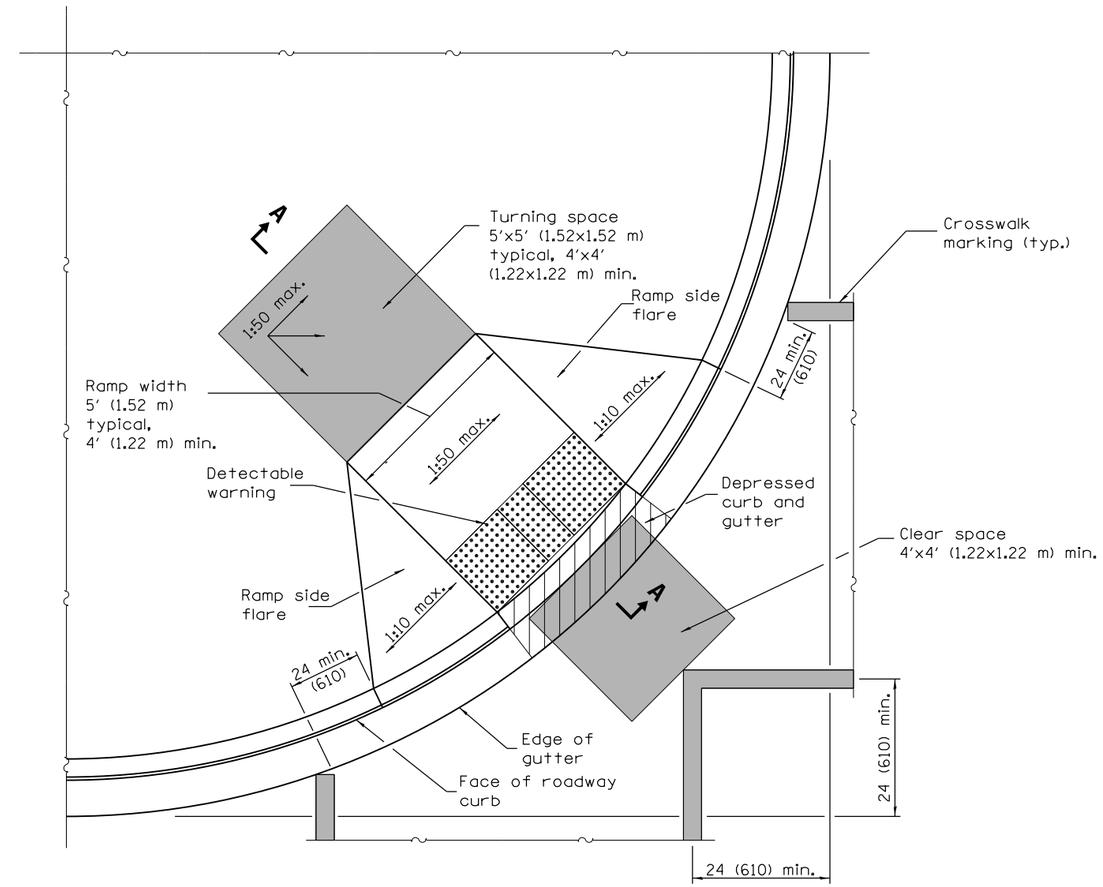


## RAMP IN PAVED AREA

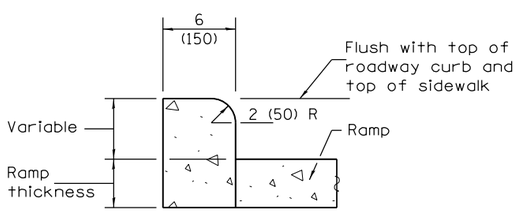


## SIDE CURB DETAIL

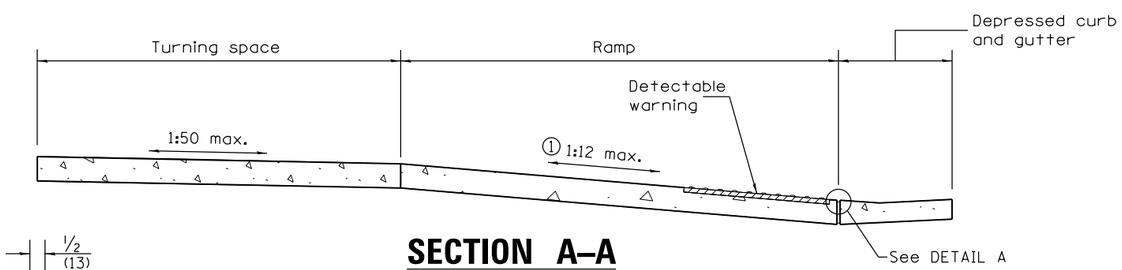


## SECTION A–A

① The running slope of the curb ramp shall not require the ramp length to exceed 15′ (4.5 m).

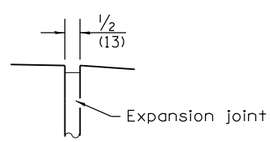


## DETAIL A

## GENERAL NOTES

This Standard shall only be used for curb radii of 20 ft. (6.1 m) or greater.

Where the turning space is constrained on a side opposite a ramp, the minimum length of the turning space in the direction of the ramp-run shall be 5′ (1.52 m).

Where 1:50 maximum slope is shown, 1:64 is preferred.

All slope ratios are expressed as units of vertical displacement to units of horizontal displacement (V:H).

See Standard 606001 for details of depressed curb adjacent to curb ramp.

All dimensions are in inches (millimeters) unless otherwise shown.

Illinois Department of Transportation

PASSED January 1, 2015
Michael Brand
ENGINEER OF POLICY AND PROCEDURES
APPROVED January 1, 2015
ENGINEER OF DESIGN AND ENVIRONMENT

ISSUED 1-1-12

| DATE | REVISIONS |
|---|---|
| 1-1-15 | Changed 'Upper landing' to |
| | 'Turning space'. Added note |
| | reg. const. turning space. |
| 1-1-13 | Revised General Notes. |
| | |
| | |

# DIAGONAL CURB RAMPS FOR SIDEWALKS

STANDARD 424006–02

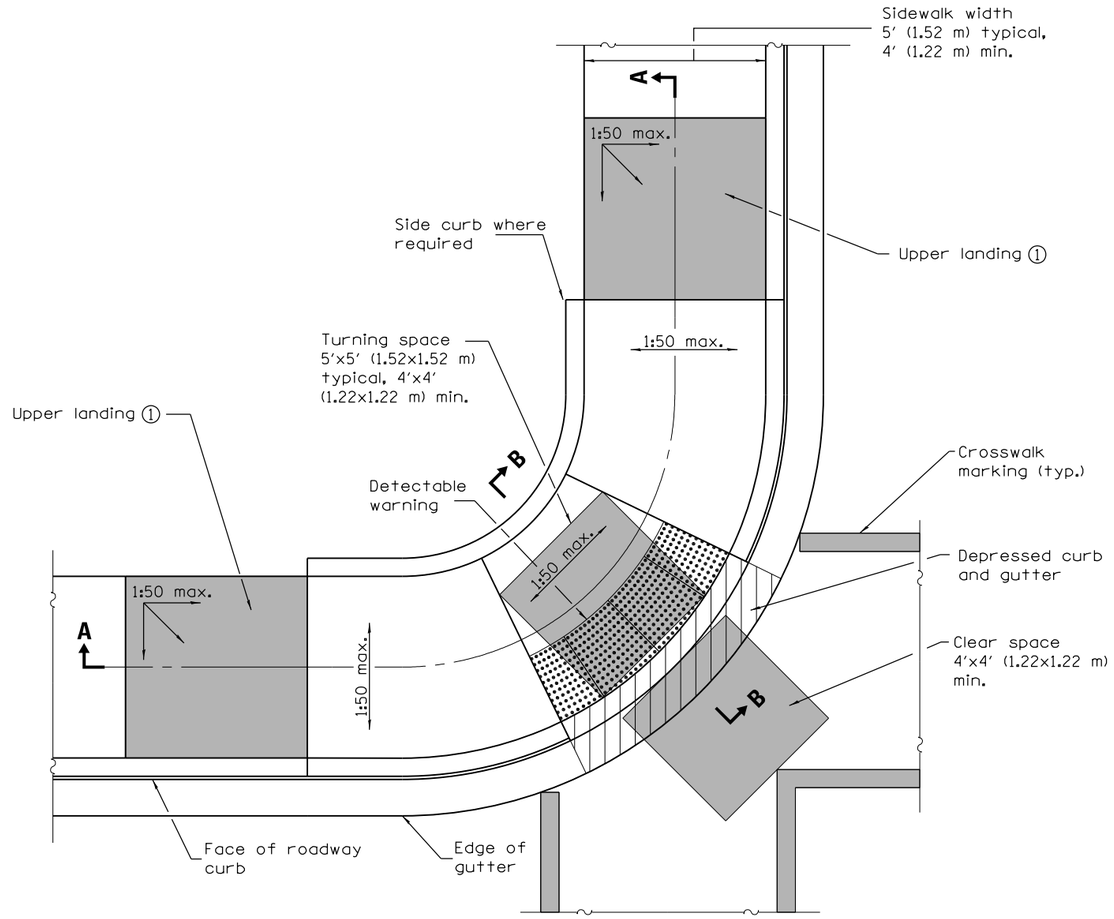


## CORNER PARALLEL CURB RAMP

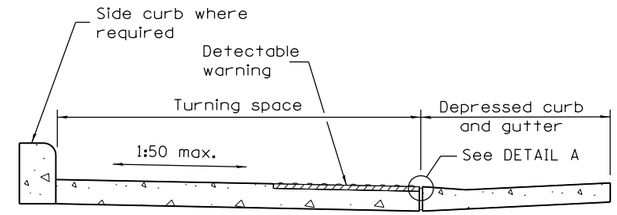


## SECTION B–B

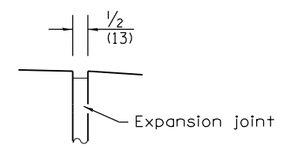


## DETAIL A

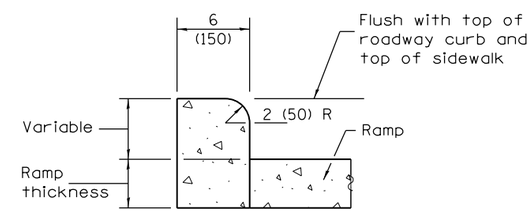


## SIDE CURB DETAIL

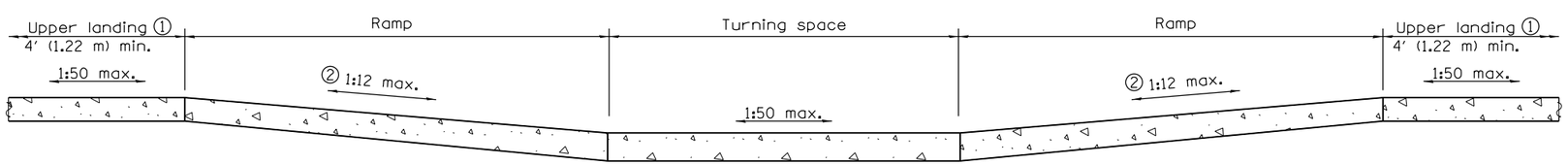


## SECTION A–A

① Upper landing(s) not required for ramp slopes flatter than 1:20.

② The running slope of the curb ramp shall not require the ramp length to exceed 15′ (4.5 m).

## GENERAL NOTES

All slope ratios are expressed as units of vertical displacement to units of horizontal displacement (V:H).

Where the turning space is constrained on a side opposite a ramp, the minimum length of the turning space in the direction of the ramp-run shall be 5′ (1.52 m).

Where 1:50 maximum slope is shown, 1:64 is preferred.

See Standard 606001 for details of depressed curb adjacent to curb ramp.

All dimensions are in inches (millimeters) unless otherwise shown.

Illinois Department of Transportation

PASSED January 1, 2015
Michael Brand
ENGINEER OF POLICY AND PROCEDURES

APPROVED January 1, 2015
ENGINEER OF DESIGN AND ENVIRONMENT

ISSUED 1-1-12

| DATE | REVISIONS |
|---|---|
| 1-1-15 | Changed 'Lower landing' to |
| | 'Turning space'. Added x-walk |
| | markings. Added note ②. |
| 1-1-13 | Revised General Notes. |
| | |
| | |

# CORNER PARALLEL CURB RAMPS FOR SIDEWALKS

STANDARD 424011–02

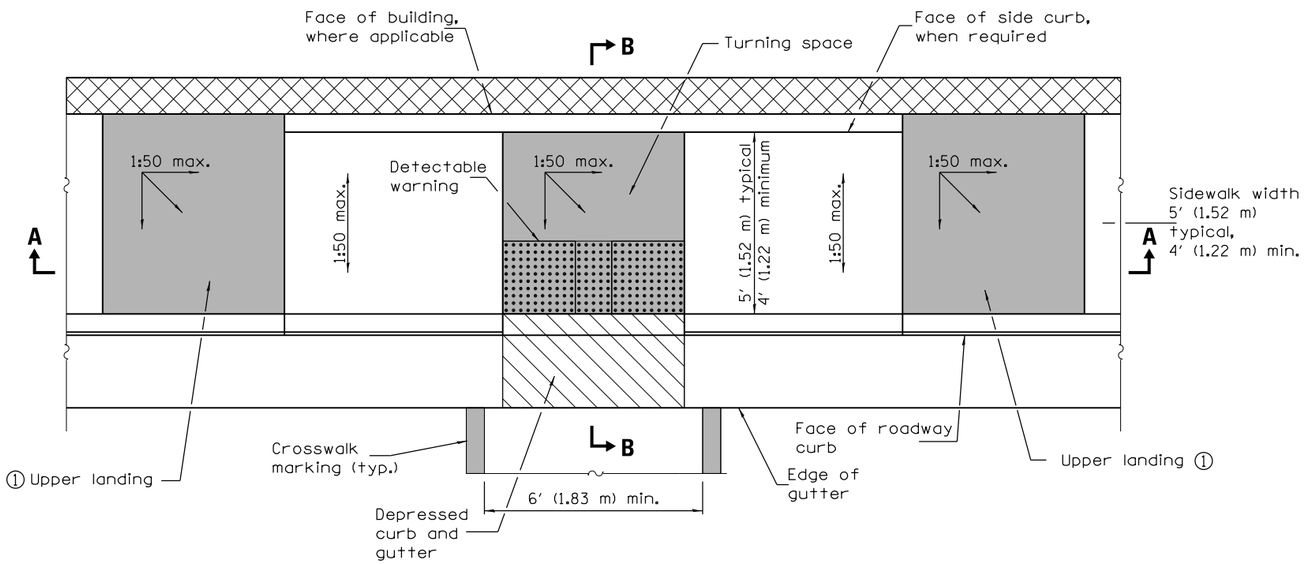


## PARALLEL MID–BLOCK CURB RAMP

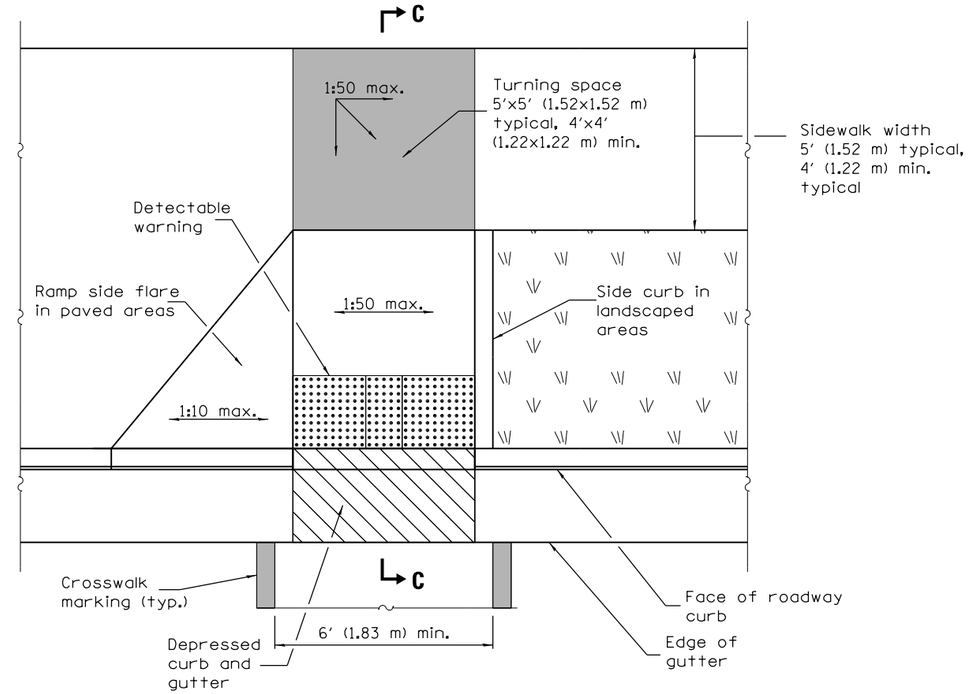


## PERPENDICULAR MID–BLOCK CURB RAMP

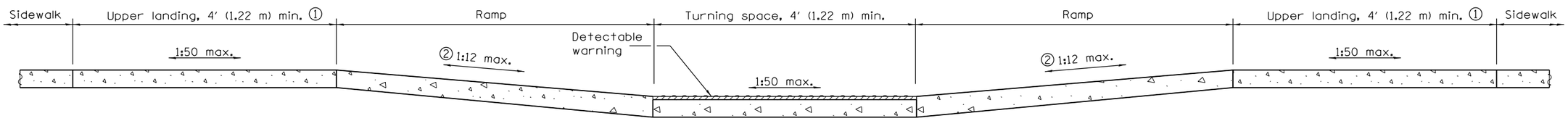


## SECTION A–A

① Upper landing(s) not required for ramp slopes flatter than 1:20.

② The running slope of the curb ramp shall not require the ramp length to exceed 15' (4.5 m).

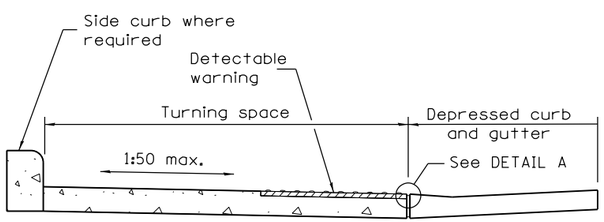


## SECTION B–B

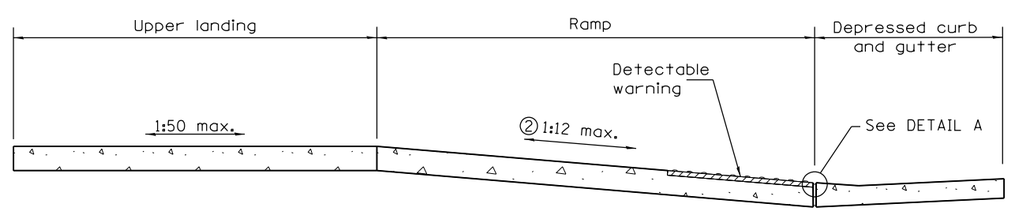


## SECTION C–C

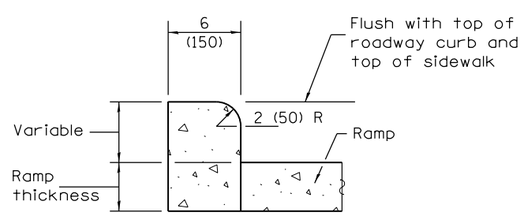


## SIDE CURB DETAIL

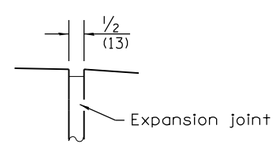


## DETAIL A

## GENERAL NOTES

All slope ratios are expressed as units of vertical displacement to units of horizontal displacement (V:H).

Where the turning space is constrained on a side opposite a ramp, the minimum length of the turning space in the direction of the ramp-run shall be 5' (1.52 m).

Where 1:50 maximum slope is shown, 1:64 is preferred.

See Standard 606001 for details of depressed curb adjacent to curb ramp.

All dimensions are in inches (millimeters) unless otherwise shown.

Illinois Department of Transportation

PASSED January 1, 2015

Michael Brand
ENGINEER OF POLICY AND PROCEDURES

APPROVED January 1, 2015

ENGINEER OF DESIGN AND ENVIRONMENT

ISSUED 1-1-12

| DATE | REVISIONS |
|---|---|
| 1-1-15 | Changed 'Lower landing' to |
| | 'Turning space'. Added |
| | note ②. Rev. Gen. Notes. |
| 1-1-13 | Widened crosswalk markings |
| | to 6' (1.83 m) min. inside |
| | dimension. Rev. Gen. Notes. |

# MID–BLOCK CURB RAMPS FOR SIDEWALKS

STANDARD 424016–02

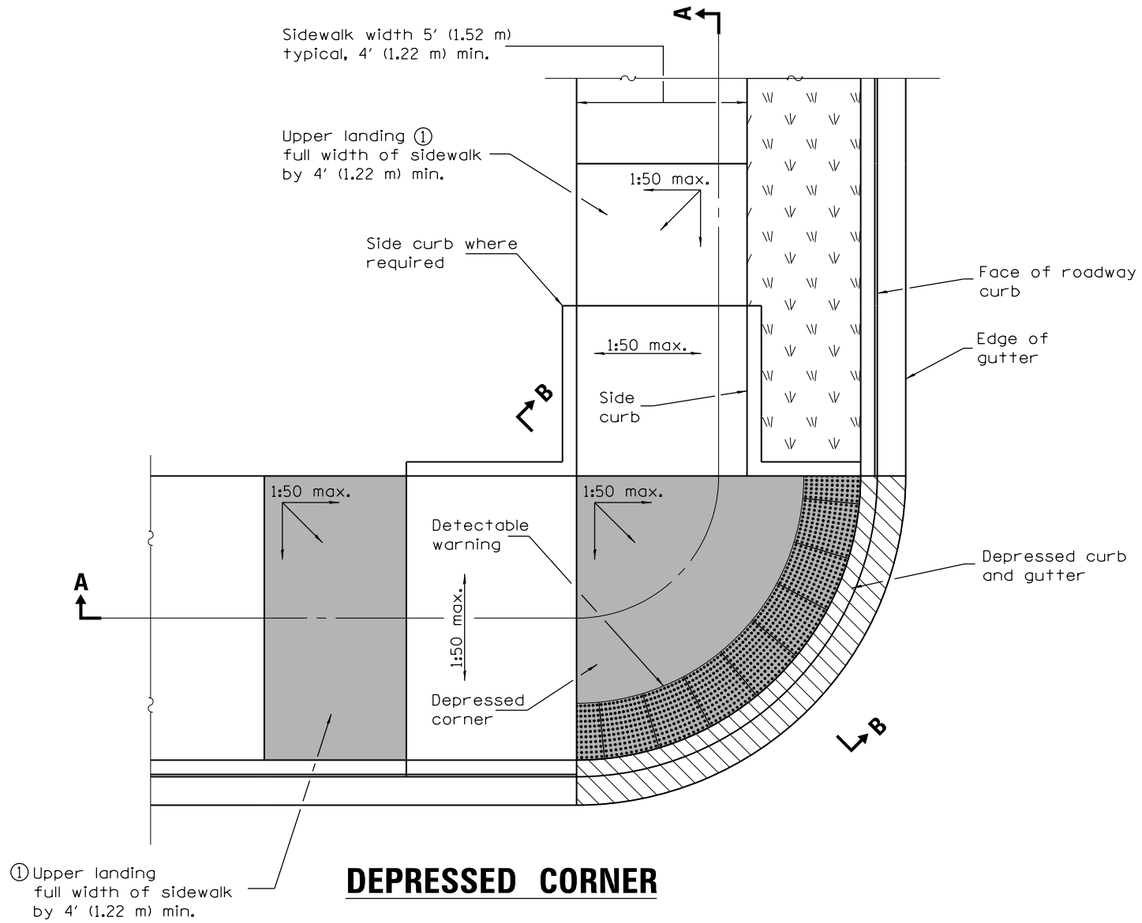


## DEPRESSED CORNER

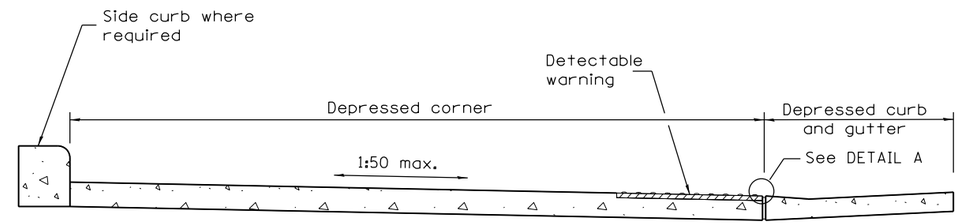


## SECTION B–B

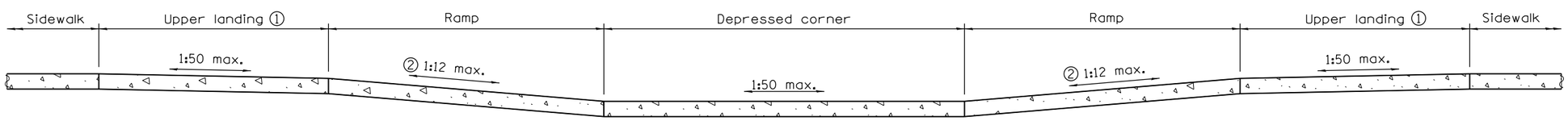


## SECTION A–A

① Upper landing(s) not required for ramp slopes flatter than 1:20.

② The running slope of the curb ramp shall not require the ramp length to exceed 15′ (4.5 m).

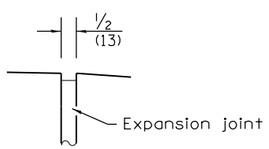


## DETAIL A

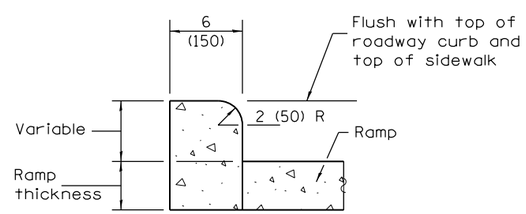


## SIDE CURB DETAIL

## GENERAL NOTES

This standard shall only be used for curb radii of 6 ft. (1.83 m) or greater.

All slope ratios are expressed as units of vertical displacement to units of horizontal displacement (V:H).

Where 1:50 maximum slope is shown, 1:64 is preferred.

See Standard 606001 for details of depressed curb adjacent to curb ramp.

All dimensions are in inches (millimeters) unless otherwise shown.

Illinois Department of Transportation

PASSED January 1, 2015

Michael Brand
ENGINEER OF POLICY AND PROCEDURES

APPROVED January 1, 2015

ENGINEER OF DESIGN AND ENVIRONMENT

ISSUED 1-1-12

| DATE | REVISIONS |
|---|---|
| 1-1-15 | Added note ②. |
| | |
| | |
| 1-1-14 | Revised sidewalk width. |
| | Revised gen. notes to limit |
| | curb rad. to 6′ (1.83 m) min. |

# DEPRESSED CORNER FOR SIDEWALKS

STANDARD 424021–03

② Detectable warning shall only be installed at entrances/alleys with permanent traffic control devices (i.e. stop signs, signals).

③ Where possible, maintain the grade of the sidewalk across the entrance/alley to avoid the need for ramps and upper landings.

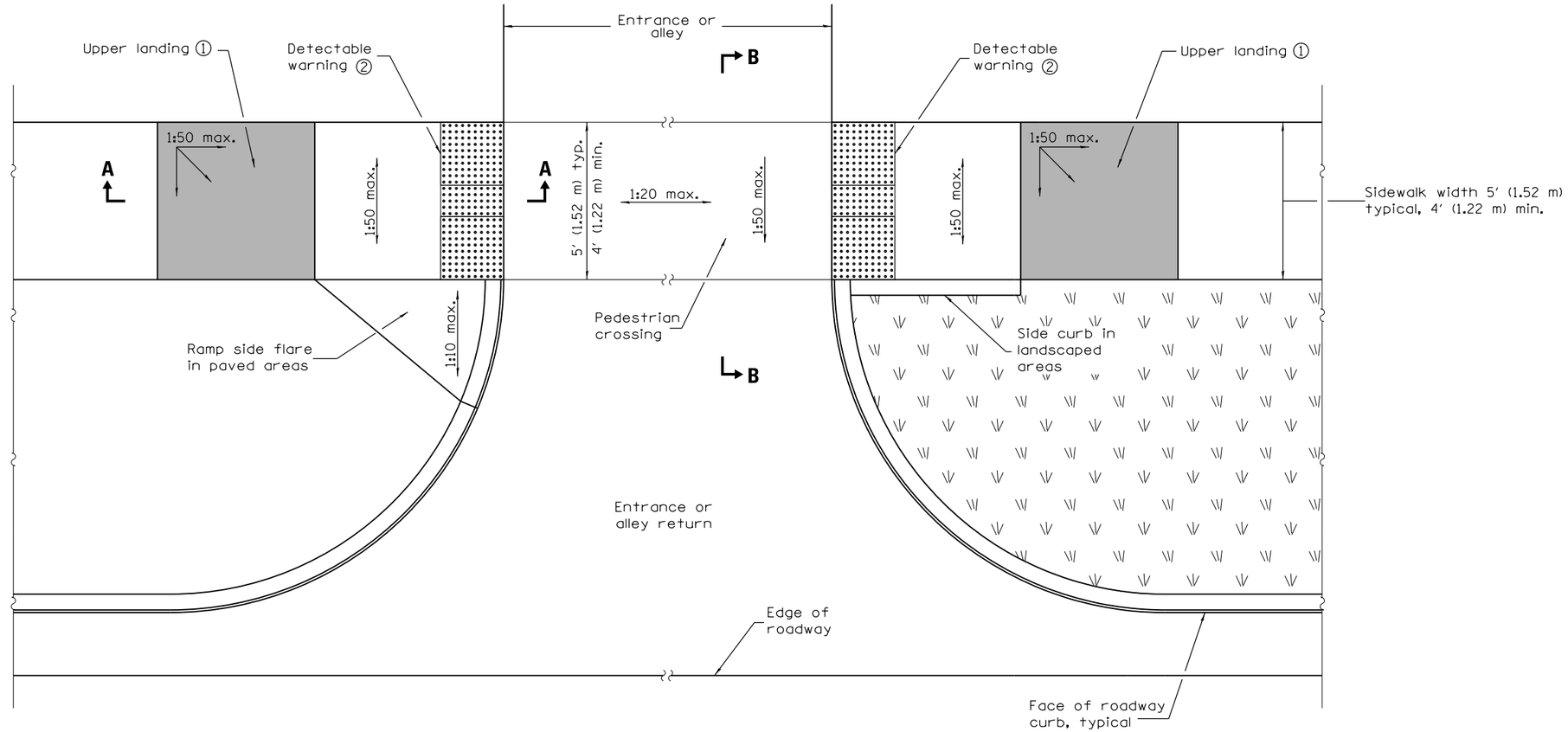


## ENTRANCE /ALLEY PEDESTRIAN CROSSING

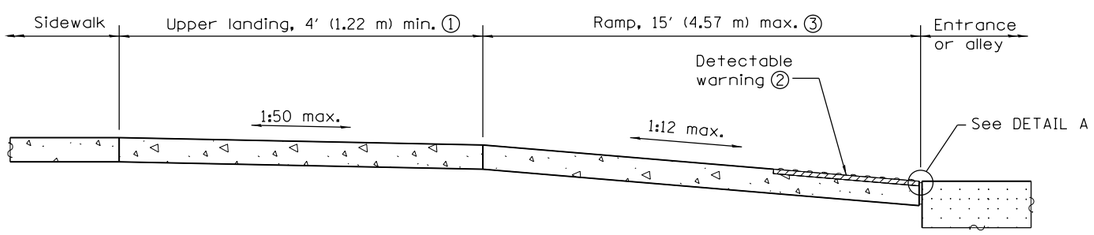


## SECTION A–A

① Upper landing not required for ramp slopes flatter than 1:20.

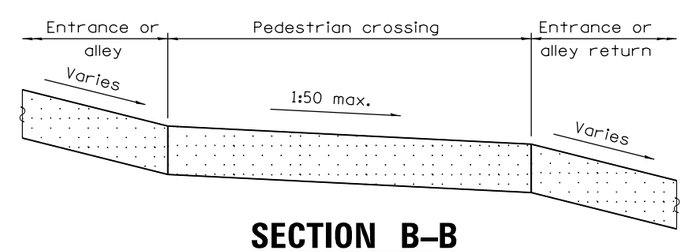


## SECTION B–B

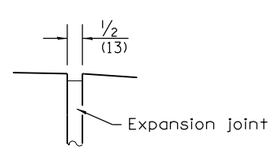


## DETAIL A

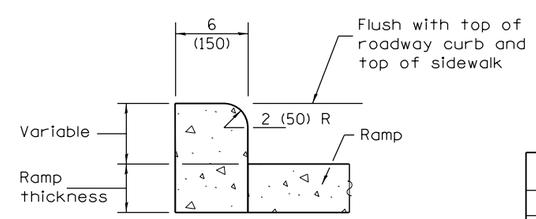


## SIDE CURB DETAIL

### GENERAL NOTES

All slope ratios are expressed as units of vertical displacement to units of horizontal displacement (V:H).

Where 1:50 maximum slope is shown, 1:64 is preferred.

All dimensions are in inches (millimeters) unless otherwise shown.

Illinois Department of Transportation

PASSED January 1, 2013
Mihael Brand
ENGINEER OF POLICY AND PROCEDURES
APPROVED January 1, 2013
ENGINEER OF DESIGN AND ENVIRONMENT

ISSUED 1-1-12

| DATE | REVISIONS |
|---|---|
| 1-1-13 | Revised General Notes. |
| | |
| | |
| 1-1-12 | New standard. |
| | |
| | |

# ENTRANCE / ALLEY PEDESTRIAN CROSSINGS

STANDARD 424026–01

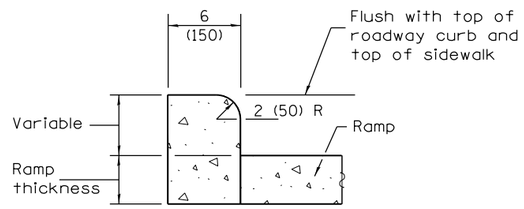


## SIDE CURB DETAIL

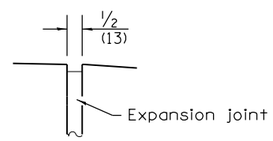


## DETAIL A

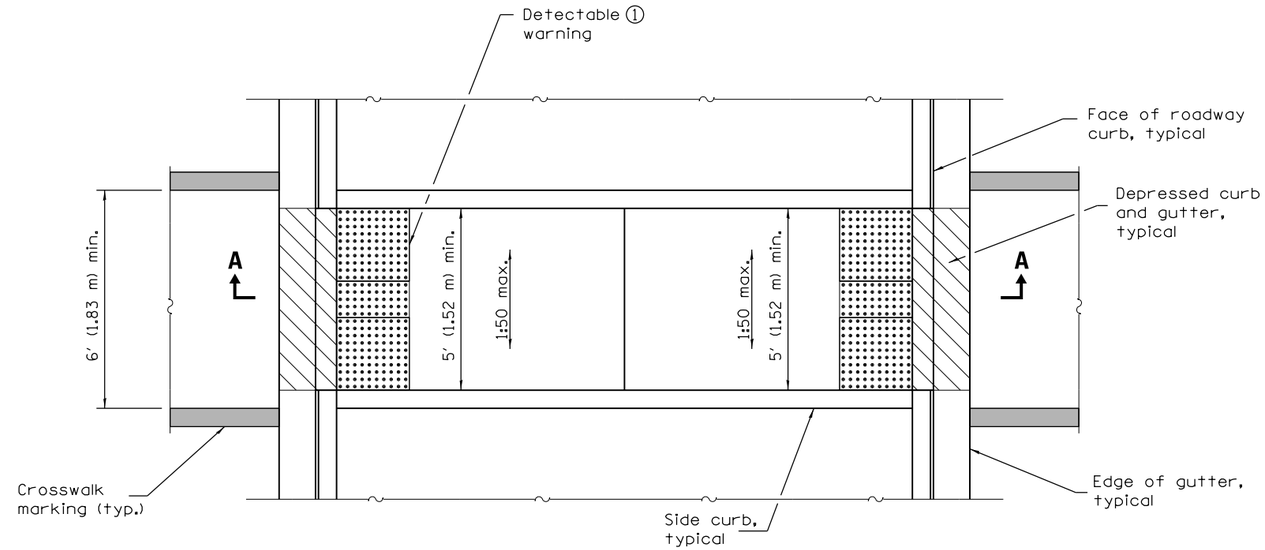


## MEDIAN PEDESTRIAN CROSSING

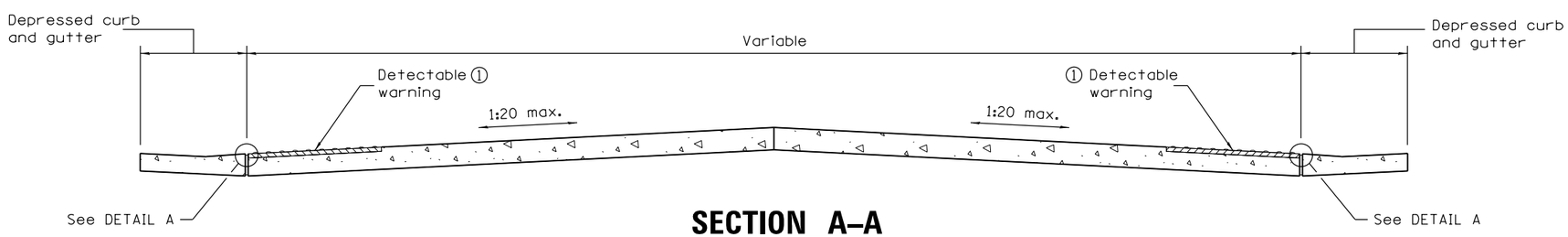


## SECTION A–A

① Omit detectable wornings when distance between back of curbs is less than 6′ (1.83 m).

## GENERAL NOTES

All slope ratios are expressed as units of vertical displacement to units of horizontal displacement (V:H).

Where 1:50 maximum slope is shown, 1:64 is preferred.

See Standard 606001 for details of depressed curb adjacent to curb ramp.

All dimensions are in inches (millimeters) unless otherwise shown.

Illinois Department of Transportation

PASSED January 1, 2013
Mikael Brand
ENGINEER OF POLICY AND PROCEDURES

APPROVED January 1, 2013
ENGINEER OF DESIGN AND ENVIRONMENT

ISSUED 1-1-12

| DATE | REVISIONS |
|---|---|
| 1-1-12 | Widened crosswalk to 6′ |
| | (1.83 m) min. inside dimension. |
| | Revised General Notes. |
| 1-1-12 | New standard. |
| | |
| | |

# MEDIAN PEDESTRIAN CROSSINGS

STANDARD 424031–01

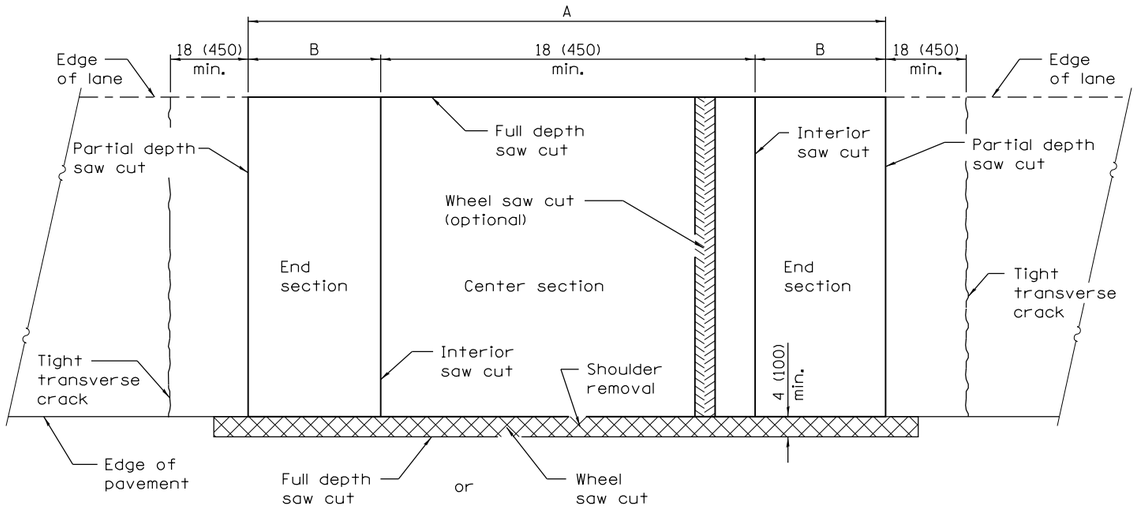


**PAVEMENT SAWING DETAIL**

(HMA SHOULDER)

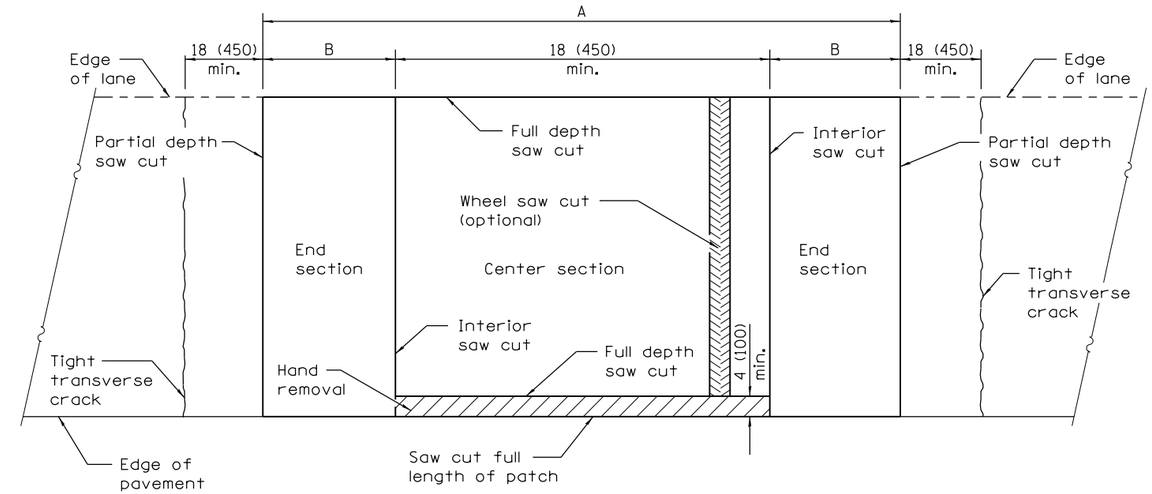


**PAVEMENT SAWING DETAIL**

(PCC SHOULDER)

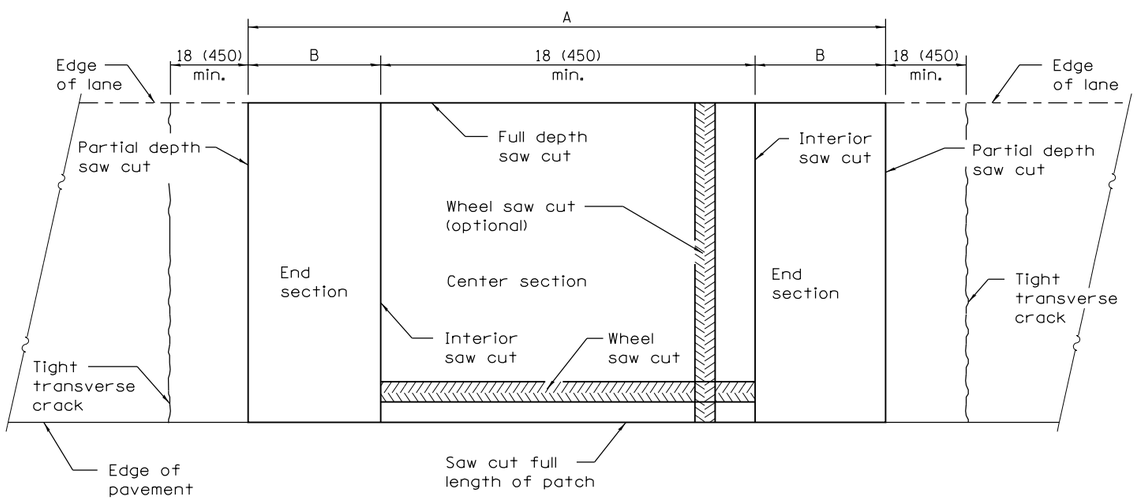


**ALTERNATE SAWING DETAIL**

(PCC SHOULDER)

| EXISTING REINFORCEMENT BARS | A (min.) | B (min.) | C (min.) |
|---|---|---|---|
| No. 5 (No. 16) | 4′-6″ (1.4 m) | 18 (450) | 16 (400) |
| No. 6 (No. 19) | 5′-0″ (1.5 m) | 21 (525) | 19 (475) |
| No. 7 (No. 22) | 5′-6″ (1.7 m) | 24 (600) | 22 (550) |
| Fabric | 5′-0″ (1.5 m) | 21 (525) | 18 (450) |

## GENERAL NOTES

When patching two adjacent lanes in one operation, the longitudinal joint shall be a longitudinal sawed joint as detailed on Standard 420001; however, the groove may be either preformed or sawed.

All dimensions are in inches (millimeters) unless otherwise shown.

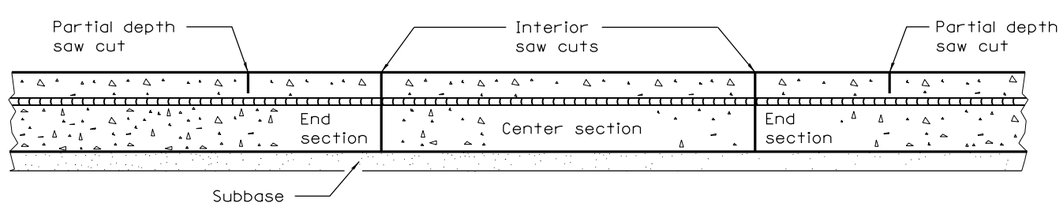


**SAW CUT DETAIL**

Illinois Department of Transportation

PASSED January 1, 2008
ENGINEER OF POLICY AND PROCEDURES

APPROVED January 1, 2008
ENGINEER OF DESIGN AND ENVIRONMENT

ISSUED 1-1-97

| DATE | REVISIONS |
|---|---|
| 1-1-08 | Switched units to English (metric). |
| 1-1-07 | Revised General Notes. |

# CLASS A PATCHES

(Sheet 1 of 2)

**STANDARD 442001–04**

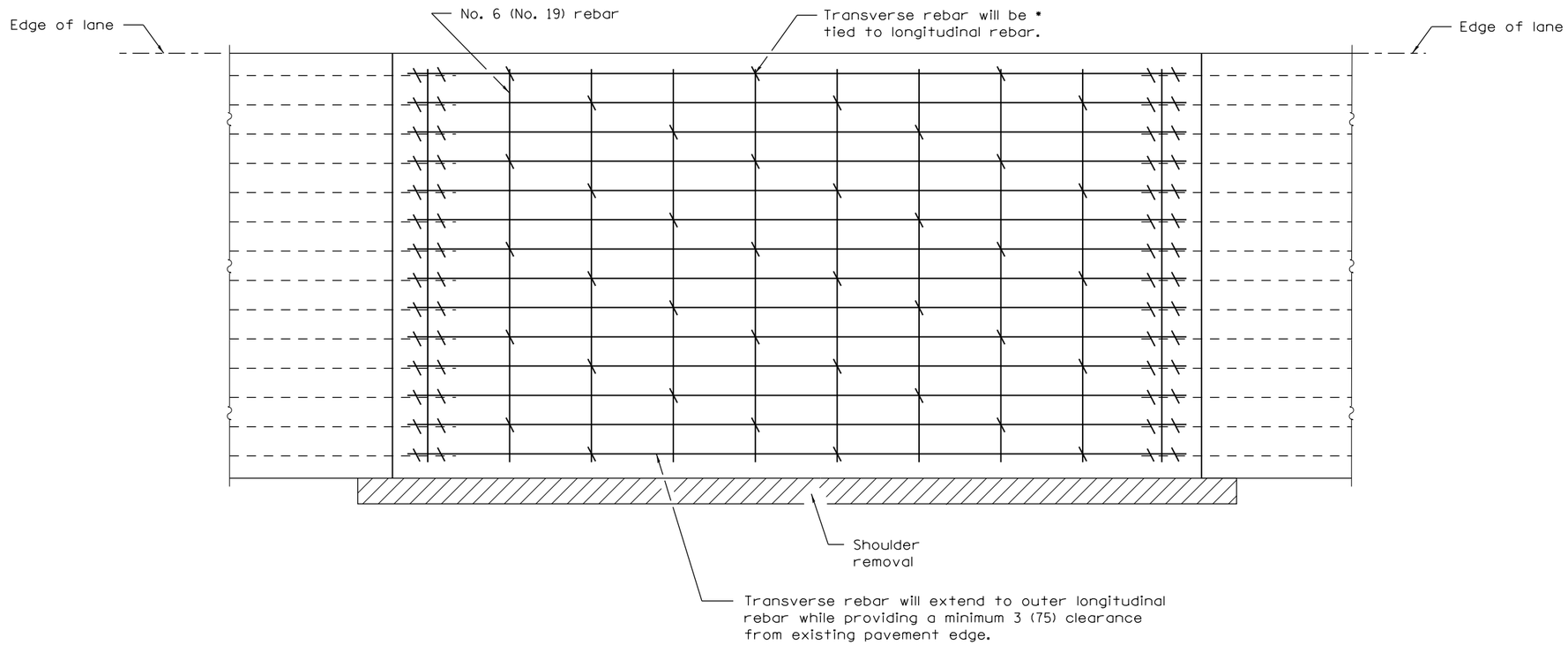


**PAVEMENT REINFORCEMENT DETAIL**

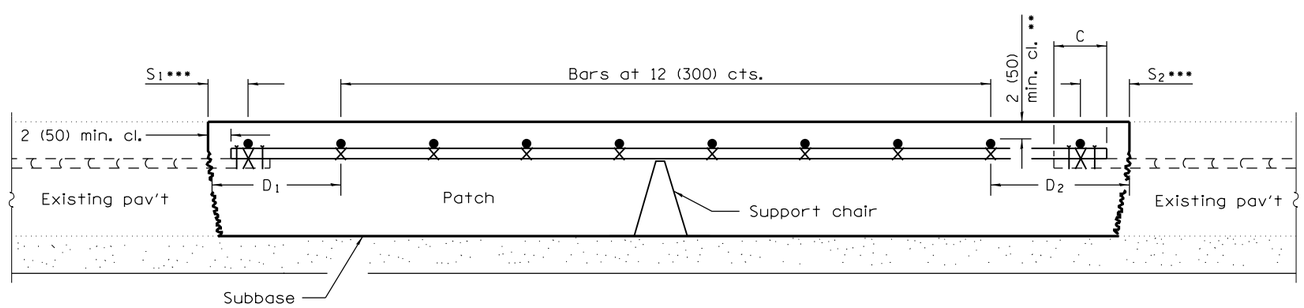


**PATCHING DETAIL**

* Every 3rd intersection must be tied.

** When the minimum clearance cannot be obtained with the transverse bar on top then the transverse rebar shall be tied to the bottom of the longitudinal rebar.

*** Variable: Where $S_1$ and $S_2$ are $2\frac{1}{2}$ (65) min. and 12 (300) max. $D_1 = 2(S_1)$ and $D_2 = 2(S_2)$.

Illinois Department of Transportation

PASSED January 1, 2008
ENGINEER OF POLICY AND PROCEDURES
APPROVED January 1, 2008
ENGINEER OF DESIGN AND ENVIRONMENT

ISSUED 1-1-97

# CLASS A PATCHES

(Sheet 2 of 2)

**STANDARD 442001–04**

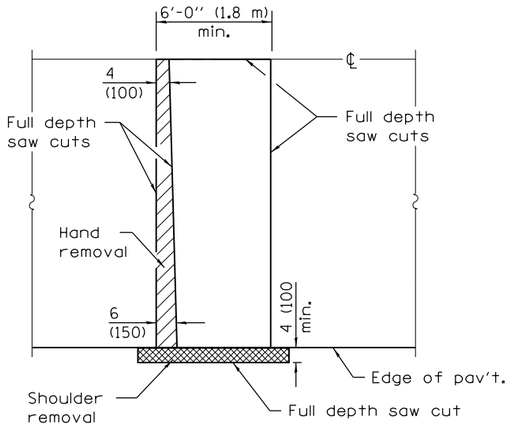


## PAVEMENT SAWING DETAIL

(HMA SHOULDER)

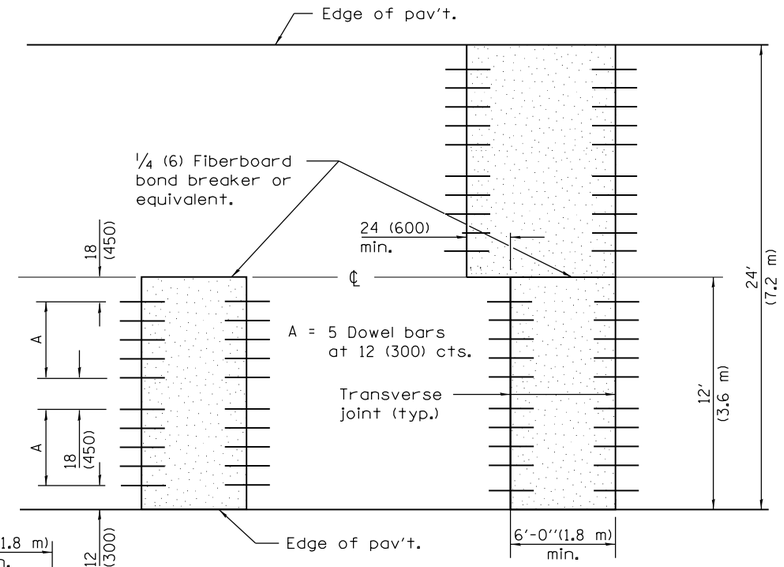


## 12' (3.6 m) WIDE LANES

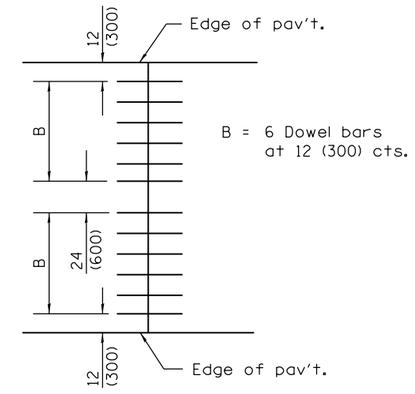


## 14' (4.2 m) WIDE RAMP

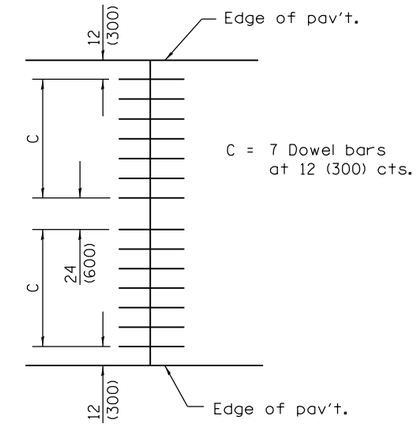


## 16' (4.8 m) WIDE RAMP

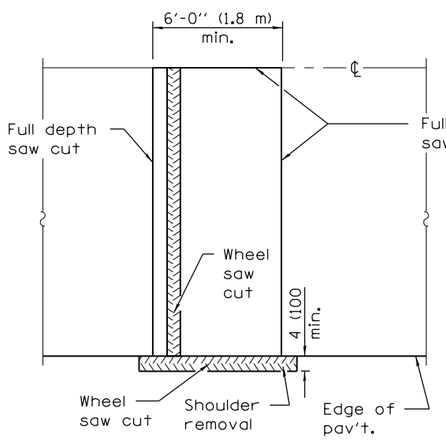


## ALTERNATE SAWING DETAIL

(HMA SHOULDER)

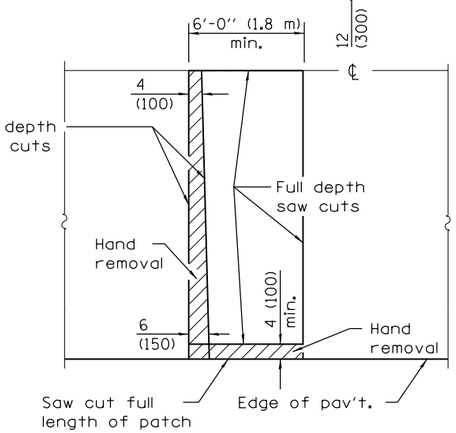


## PAVEMENT SAWING DETAIL

(PCC SHOULDER)

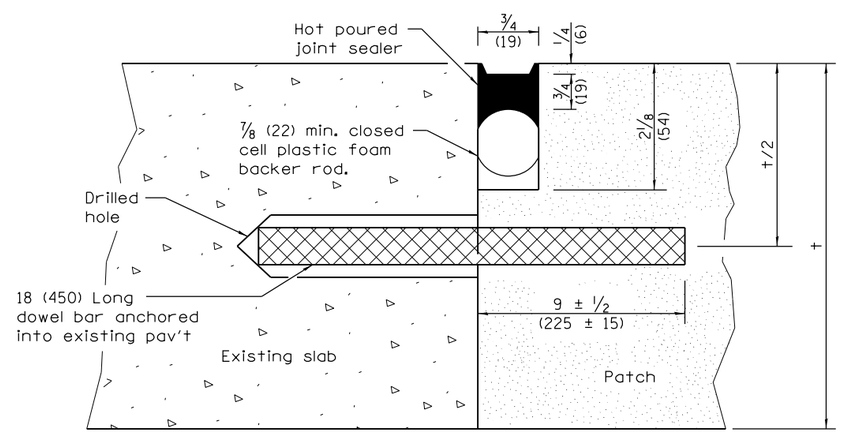


## TRANSVERSE JOINT

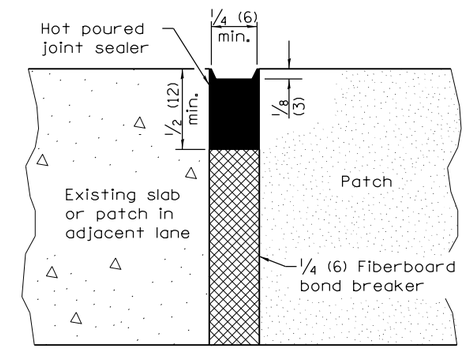


## CENTERLINE JOINT

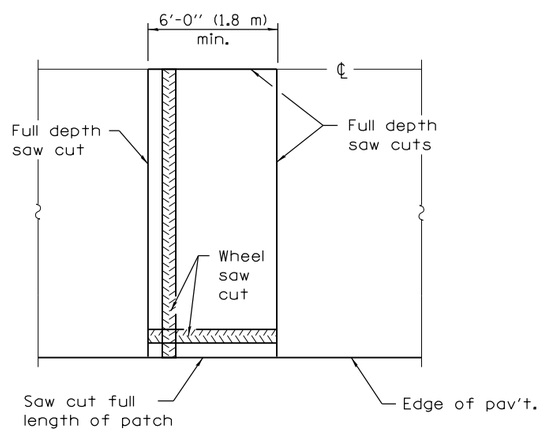


## ALTERNATE SAWING DETAIL

(PCC SHOULDER)

| DOWEL BAR TABLE | | |
|---|---|---|
| PAVEMENT THICKNESS | DOWEL BAR DIAMETER | HOLE DIAMETER |
| 8 (200) or greater | 1 1/2 (38) | 1 5/8 (41) |
| 7 (180) thru 7.99 (199) | 1 1/4 (32) | 1 3/8 (35) |
| Less than 7 (180) | 1 (25) | 1 1/8 (29) |

## GENERAL NOTES

The transverse joints for Class B patches shall align with joints or cracks in the adjacent lane whenever possible.

See Standard 420701 for details of pavement fabric.

All dimensions are in inches (millimeters) unless otherwise shown.

Illinois Department of Transportation

PASSED January 1, 2008
ENGINEER OF POLICY AND PROCEDURES
APPROVED January 1, 2008
ENGINEER OF DESIGN AND ENVIRONMENT

ISSUED 1-1-97

| DATE | REVISIONS |
|---|---|
| 1-1-08 | Switched units to |
| | English (metric). |
| | |
| 1-1-07 | Revised General Notes. |
| | |
| | |

# CLASS B PATCHES

(Sheet 1 of 2)

STANDARD 442101–07

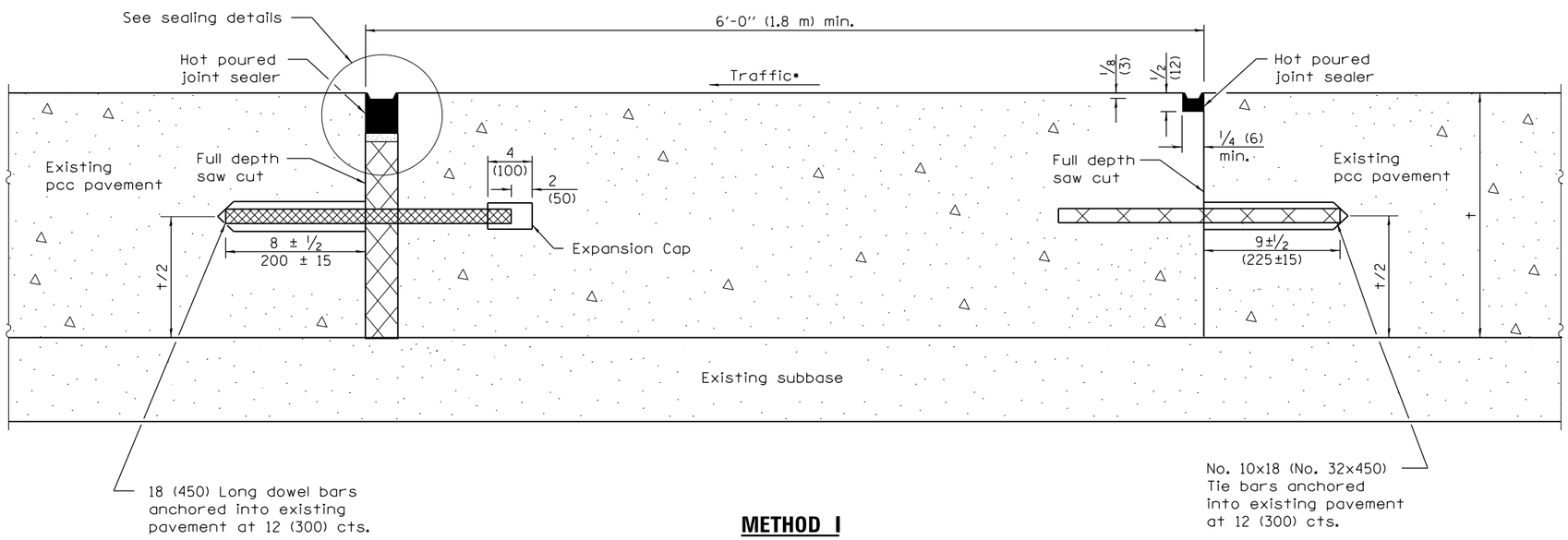


**METHOD I**

(Without Resurfacing)

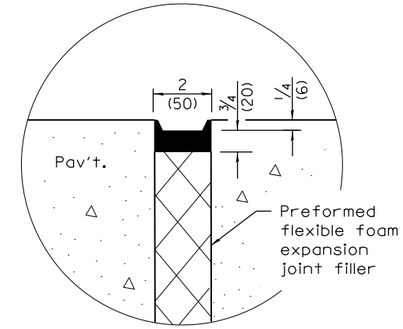


**SEALING DETAIL**

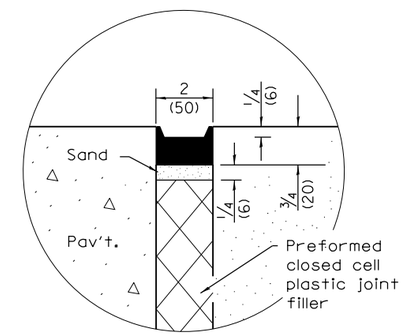


**SEALING DETAIL**

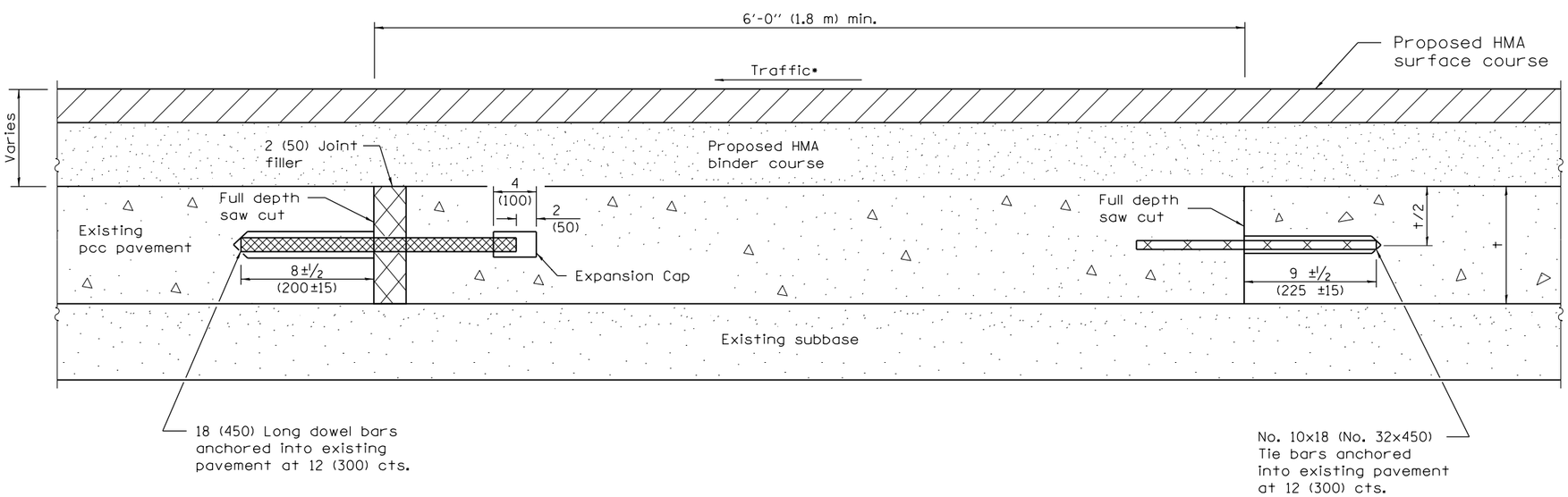


**METHOD II**

(With Resurfacing)

## NOTE

- When re-establishing a transverse expansion joint on a two-lane, two-way road, reverse the orientation of the dowel bars with respect to traffic for one of the patches such that the joint will be continuous across both lanes.

Illinois Department of Transportation

PASSED January 1, 2008

ENGINEER OF POLICY AND PROCEDURES

APPROVED January 1, 2008

ENGINEER OF DESIGN AND ENVIRONMENT

ISSUED 1-16-07

# CLASS B PATCHES

(Sheet 2 of 2)

STANDARD 442101–07

## CLASS C

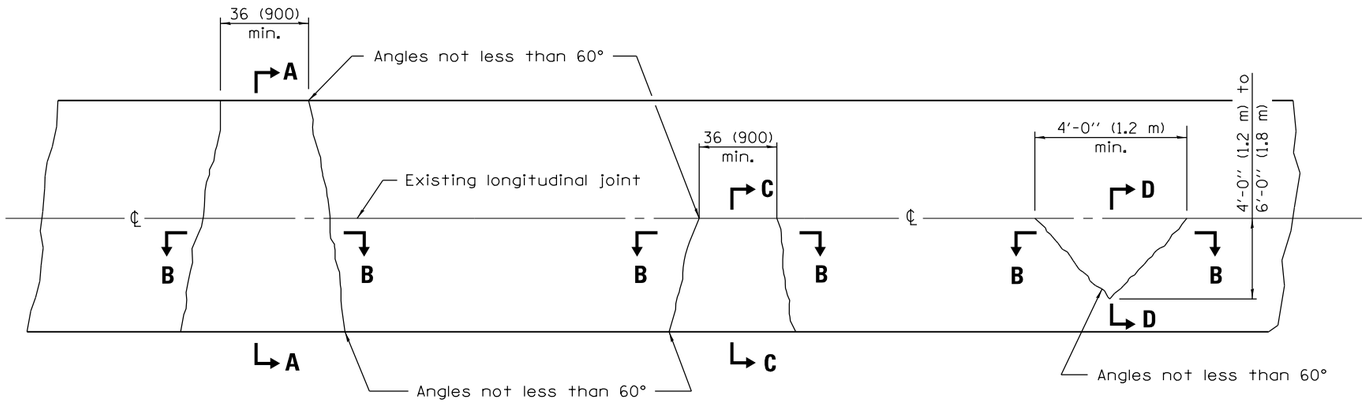


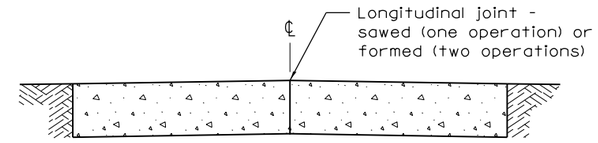


**SECTION A–A**

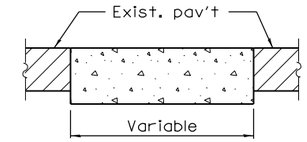


**SECTION B–B**

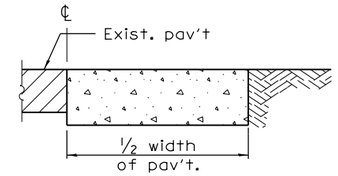


**SECTION C–C**

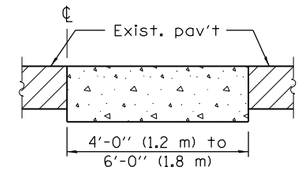


**SECTION D–D**

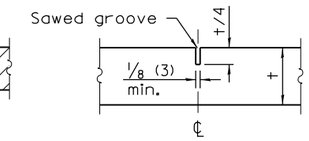


**DETAIL OF SAWED CONTRACTION JOINT**

Note:
Longitudinal joints shall be as detailed on Standard 420001, except tie bars are not required for patches 20'-0" (6.0 m) or less in length.

## CLASS D

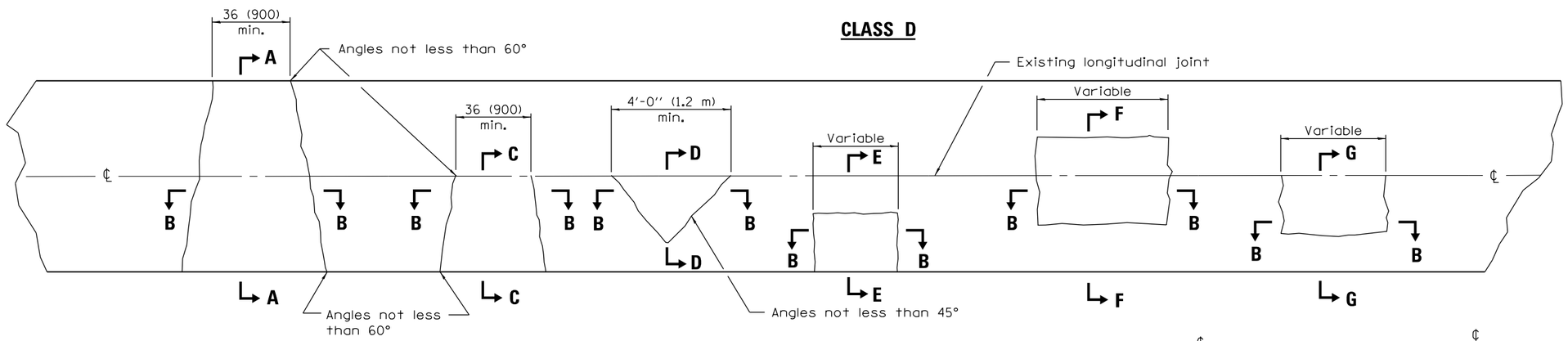


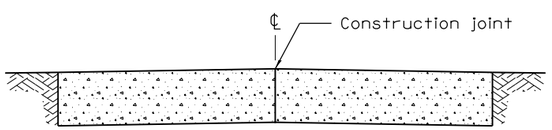


**SECTION A–A**
(Built in two operations)

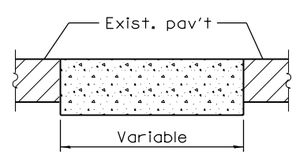


**SECTION B–B**

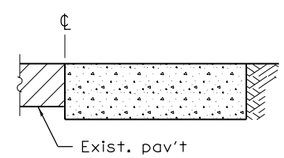


**SECTION C–C**

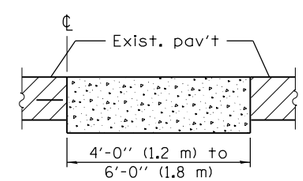


**SECTION D–D**

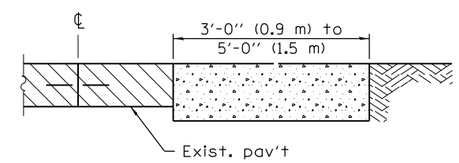


**SECTION E–E**

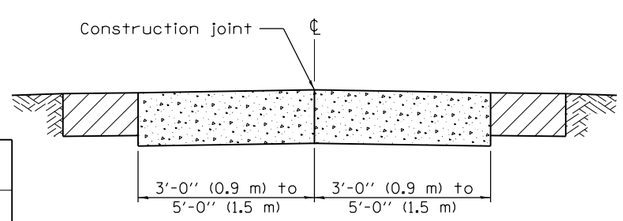


**SECTION F–F**
(Built in two operations)

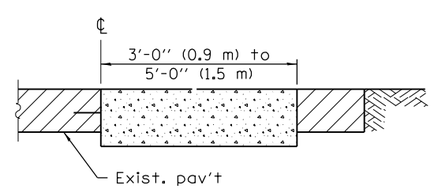


**SECTION G–G**

### GENERAL NOTES

Existing tie bars shall be either cut or removed. Marginal bars shall be cut.

All dimensions are in inches (millimeters) unless otherwise shown.

Illinois Department of Transportation

PASSED January 1, 2008
ENGINEER OF POLICY AND PROCEDURES
APPROVED January 1, 2008
ENGINEER OF DESIGN AND ENVIRONMENT

ISSUED 1-1-97

| DATE | REVISIONS |
|---|---|
| 1-1-08 | Switched units to |
| | English (metric). |
| | |
| 1-1-07 | Revised Note for |
| | Class C patches. |
| | |

# CLASS C and D PATCHES

**STANDARD 442201–03**

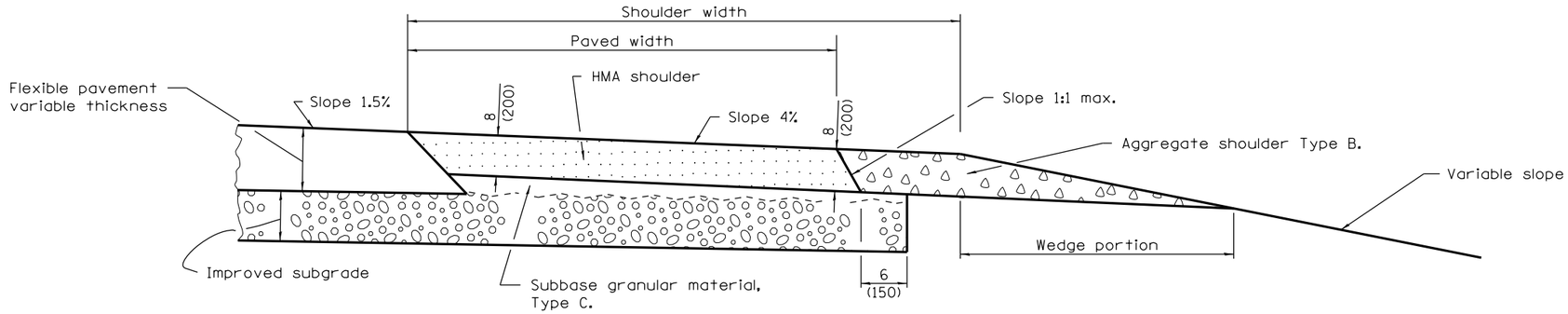


## SHOULDER FOR TANGENT PAVEMENT

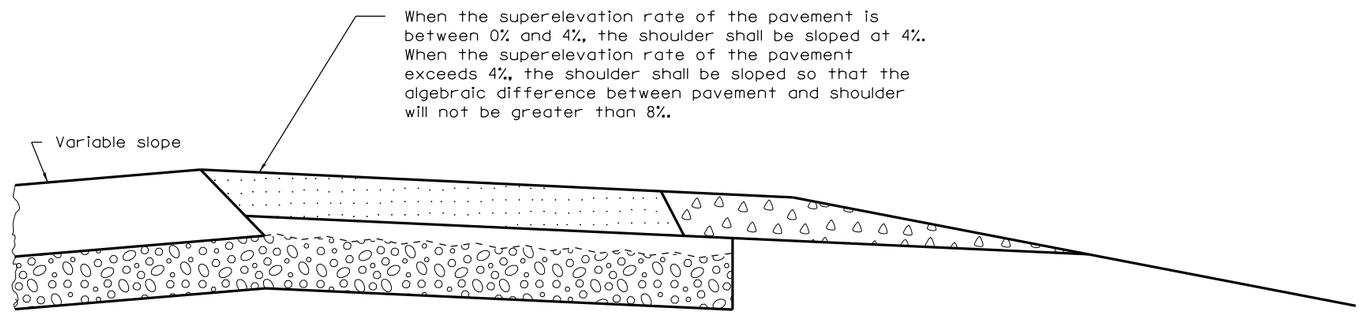


## SHOULDER FOR SUPERELEVATED PAVEMENT (OUTSIDE OF CURVE)

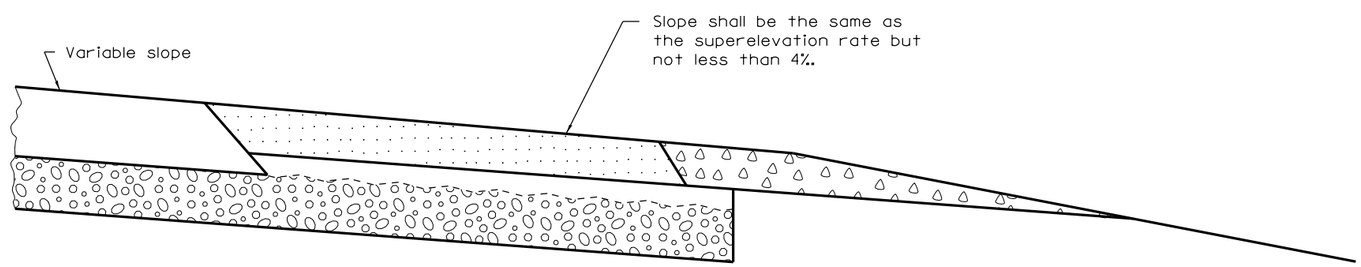


## SHOULDER FOR SUPERELEVATED PAVEMENT (INSIDE OF CURVE)

### GENERAL NOTES

Except as noted or shown the dimensions and notes specified for the shoulder of tangent pavement are typical for the shoulders of superelevated pavement.

All dimensions are in inches (millimeters) unless otherwise shown.

Illinois Department of Transportation

PASSED January 1, 2008
ENGINEER OF POLICY AND PROCEDURES
APPROVED January 1, 2008
ENGINEER OF DESIGN AND ENVIRONMENT

ISSUED 1-1-97

| DATE | REVISIONS |
|---|---|
| 1-1-08 | Switched units to |
| | English (metric). |
| | |
| 1-1-07 | Switched to Hot-Mix |
| | Asphalt (HMA) |
| | terminology. |

# HMA SHOULDER ADJACENT TO FLEXIBLE PAVEMENT

STANDARD 482001–02

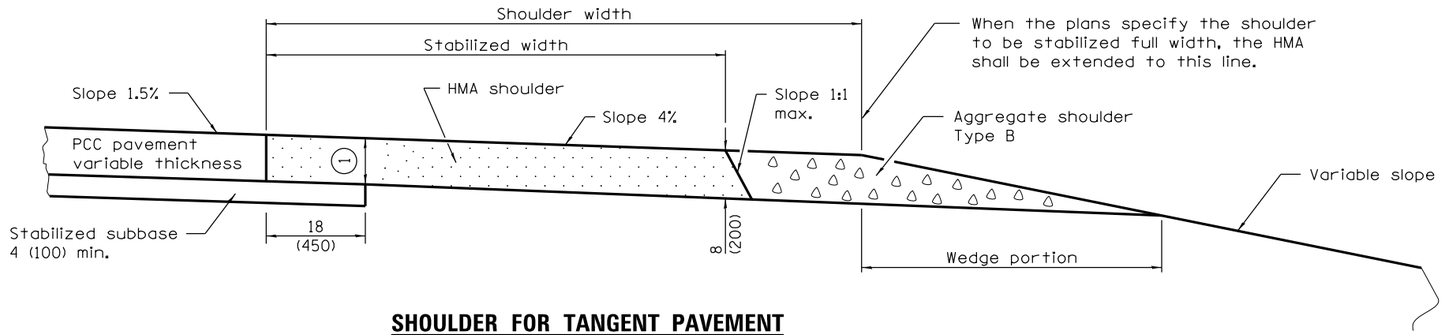


## SHOULDER FOR TANGENT PAVEMENT

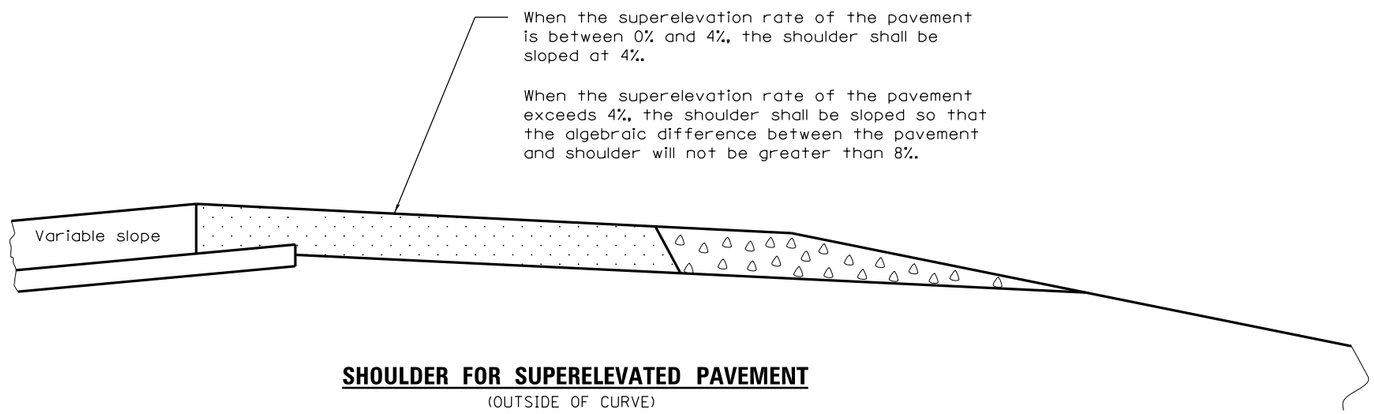


## SHOULDER FOR SUPERELEVATED PAVEMENT

(OUTSIDE OF CURVE)

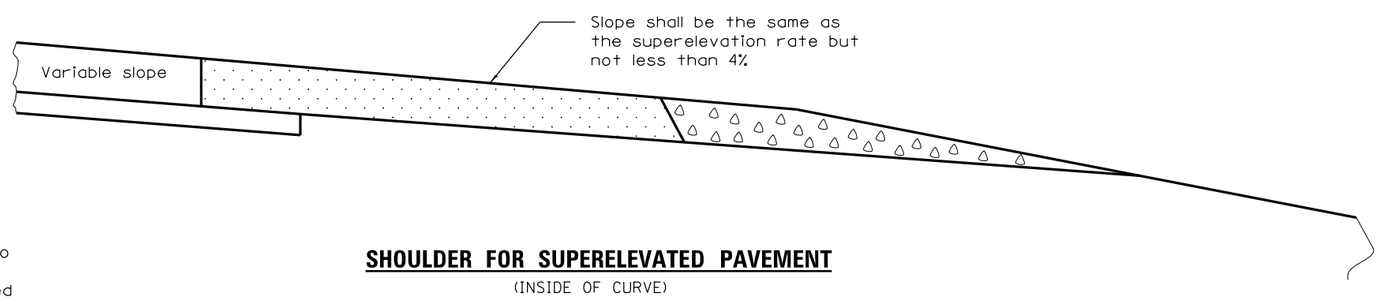


## SHOULDER FOR SUPERELEVATED PAVEMENT

(INSIDE OF CURVE)

(1) (Applies only when subbase extension is to remain in place.) This thickness will vary with the thickness of pavement, extended length of subbase, and the slope of pavement. When this thickness is less than 8 (200), the stabilized shoulder shall be stepped down at this line to provide a 8 (200) minimum thickness.

## GENERAL NOTES

Except as noted or shown the dimensions and notes specified for the shoulder of tangent pavement are typical for the shoulders of superelevated pavement.

All slope ratios are expressed as units of vertical displacement to units of horizontal displacement (V:H).

All dimensions are in inches (millimeters) unless otherwise shown.

Illinois Department of Transportation

PASSED January 1, 2008
ENGINEER OF POLICY AND PROCEDURES
APPROVED January 1, 2008
ENGINEER OF DESIGN AND ENVIRONMENT

ISSUED 1-1-97

| DATE | REVISIONS |
|---|---|
| 1-1-08 | Switched units to |
| | English (metric). |
| | |
| 1-1-07 | Switched to Hot-Mix |
| | Asphalt (HMA) |
| | terminology. |

# HMA SHOULDER ADJACENT TO RIGID PAVEMENT

STANDARD 482006–03

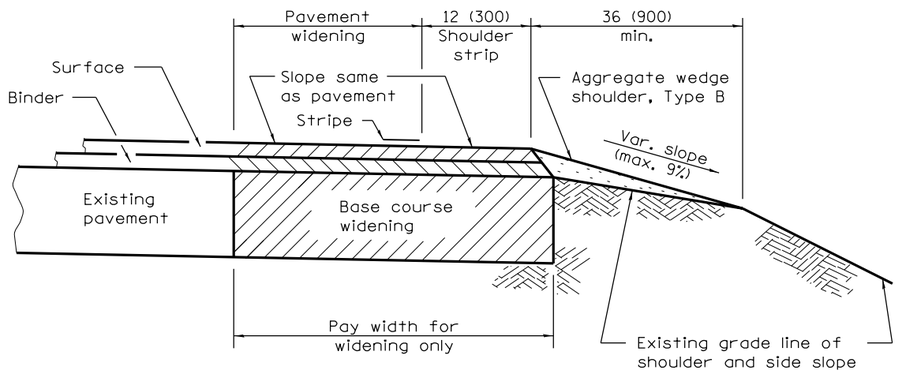


**HMA SHOULDER STRIP AND AGGREGATE WEDGE WITH WIDENING**

(Cross-section A)

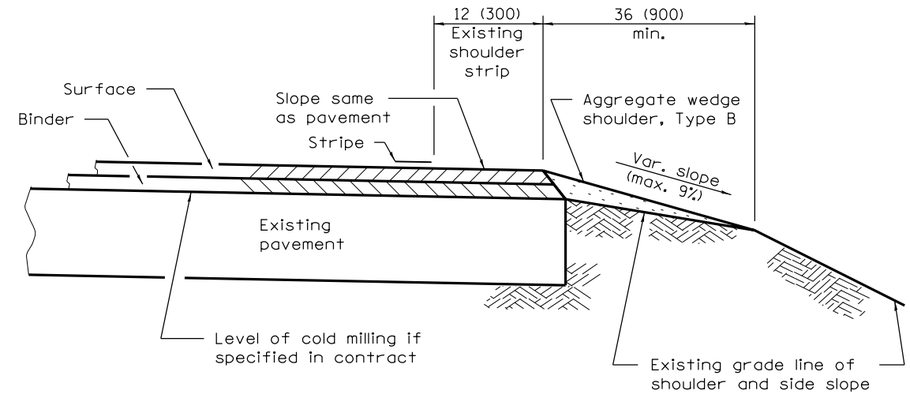


**COLD MILLING AND/OR RESURFACING OF EXISTING PAVEMENT WITH SHOULDER STRIPS**

(Cross-section C)

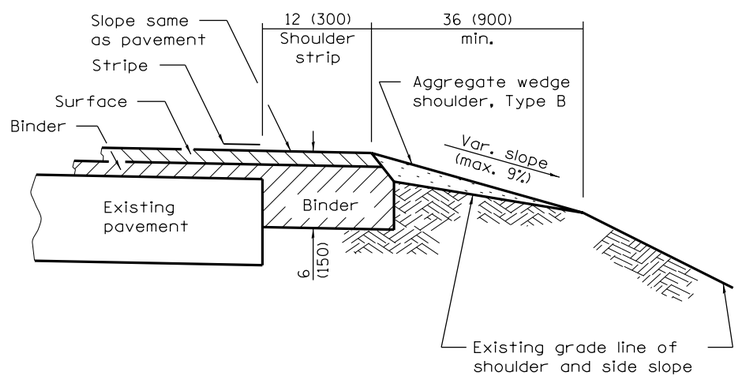


**HMA SHOULDER STRIP AND AGGREGATE WEDGE WITH RESURFACING**

(Cross-section B)

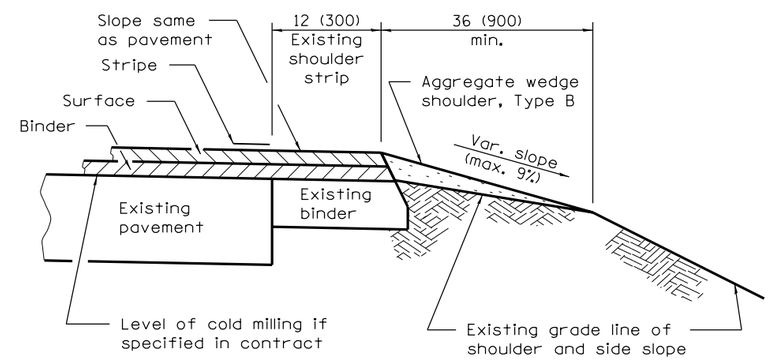


**COLD MILLING AND/OR RESURFACING OF EXISTING PAVEMENT WITH SHOULDER STRIPS**

(Cross-section D)

All dimensions are in inches (millimeters) unless otherwise shown.

Illinois Department of Transportation

PASSED January 1, 2008
ENGINEER OF POLICY AND PROCEDURES
APPROVED January 1, 2008
ENGINEER OF DESIGN AND ENVIRONMENT

ISSUED 1-1-97

| DATE | REVISIONS |
|---|---|
| 1-1-08 | Switched units to |
| | English (metric). |
| | |
| 1-1-07 | Switched to Hot-Mix |
| | Asphalt (HMA) |
| | terminology. |

# HMA SHLD. STRIPS/SHLDS. WITH RESURFACING OR WIDENING AND RESURFACING PROJECTS

(Sheet 1 of 2)

**STANDARD 482011–03**

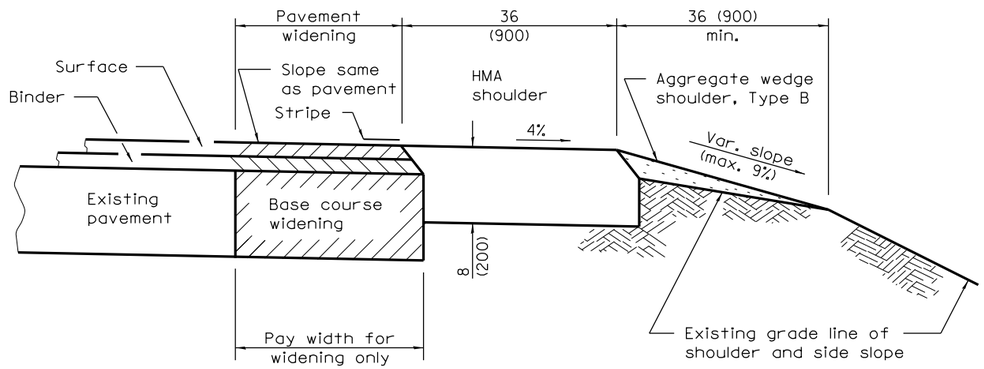


**HMA SHOULDER AND AGGREGATE WEDGE WITH WIDENING**

(Cross-section E)

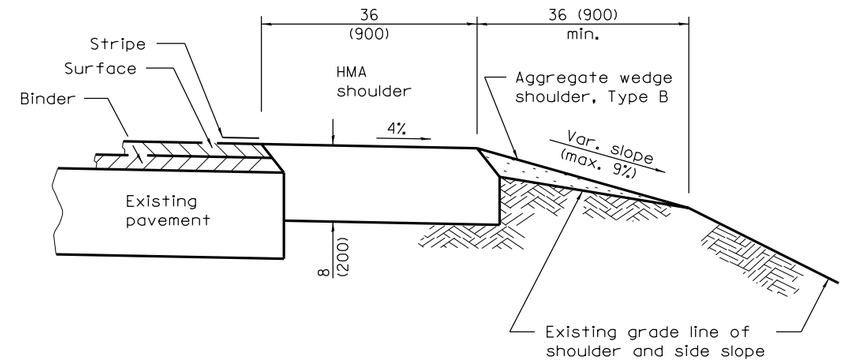


**HMA SHOULDER AND AGGREGATE WEDGE WITH RESURFACING**

(Cross-section G)

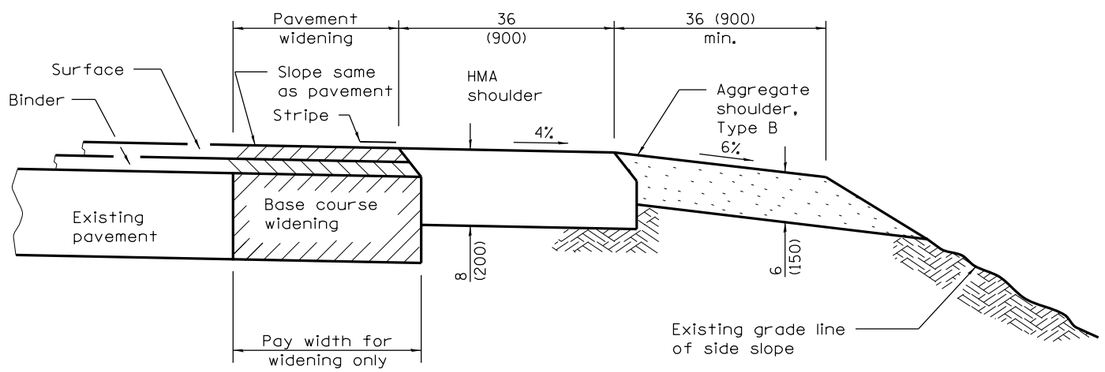


**HMA AND AGGREGATE SHOULDERS WITH WIDENING**

(Cross-section F)

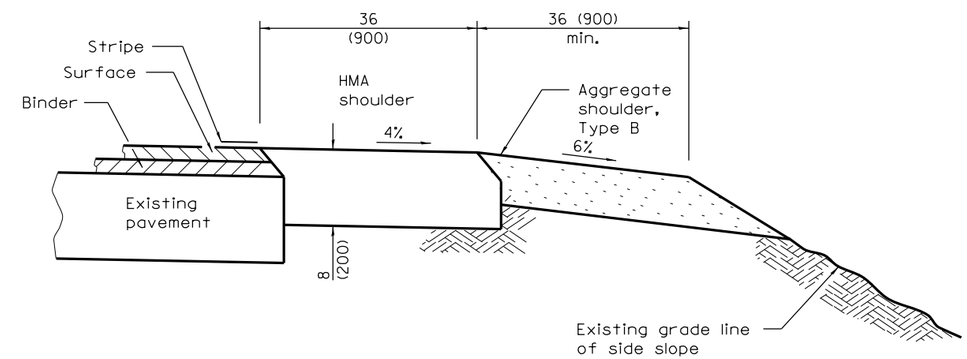


**HMA AND AGGREGATE SHOULDERS WITH RESURFACING**

(Cross-section H)

Illinois Department of Transportation

PASSED January 1, 2008

ENGINEER OF POLICY AND PROCEDURES

APPROVED January 1, 2008

ENGINEER OF DESIGN AND ENVIRONMENT

ISSUED 1-1-97

# HMA SHLD. STRIPS/SHLDS. WITH RESURFACING OR WIDENING AND RESURFACING PROJECTS

(Sheet 2 of 2)

**STANDARD 482011–03**

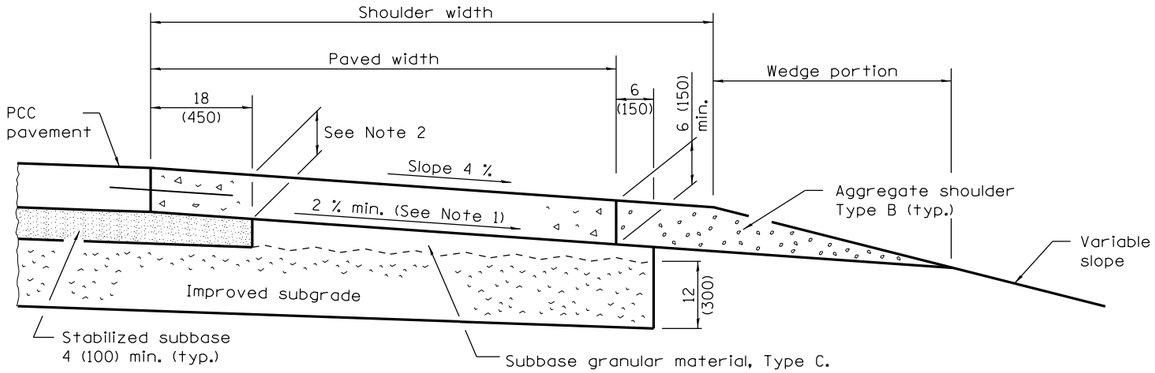


## SHOULDER FOR TANGENT PAVEMENT

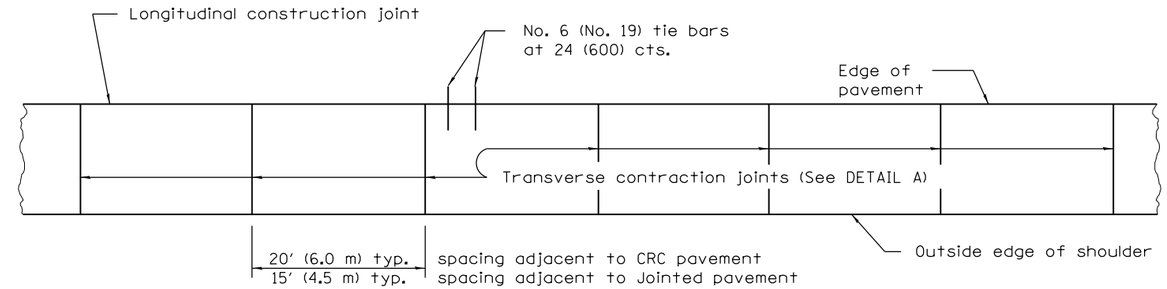


## PLAN

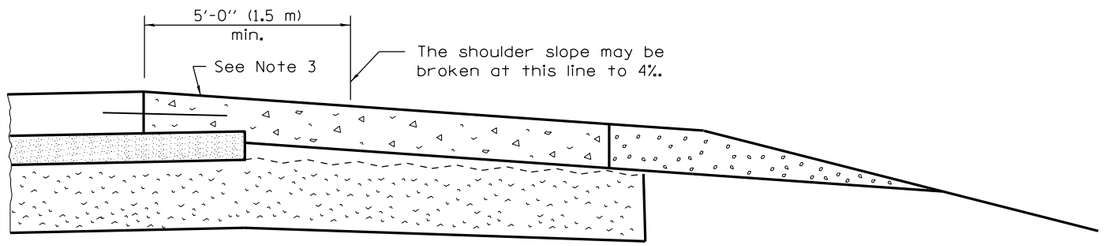


## SHOULDER FOR SUPERELEVATED PAVEMENT

(Outside of curve)

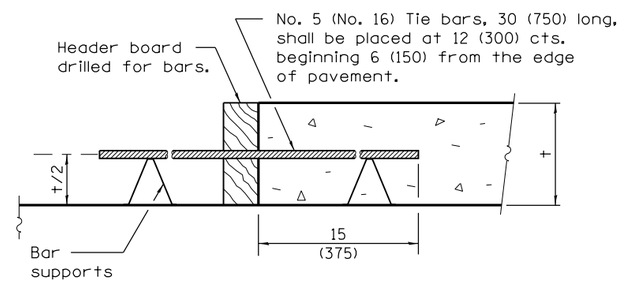


## TRANSVERSE CONSTRUCTION JOINT

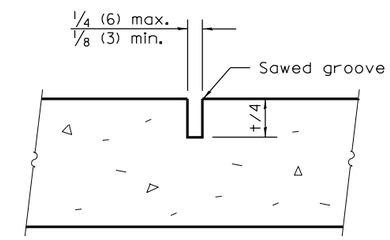


## DETAIL A

## TRANSVERSE CONTRACTION JOINT

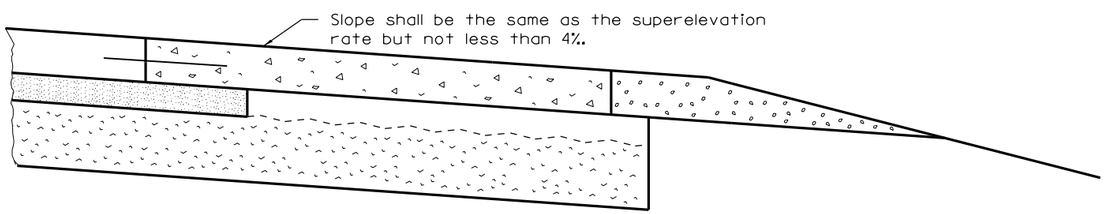


## SHOULDER FOR SUPERELEVATED PAVEMENT

(Inside of curve)

## NOTES

Note 1: Does not apply when sub-surface drains are installed.

Note 2: When the subbase is not removed, this thickness will vary with the thickness of pavement, extended length of subbase, and the slope of pavement. When this thickness is less than 6 (150), the paved shoulder shall be stepped down at this line to provide a 6 (150) minimum thickness.

Note 3: When the superelevation rate of the pavement is between 0% and 4%, the shoulder shall be sloped at 4%. When the superelevation rate of the pavement exceeds 4%, the shoulder shall be sloped so that the algebraic difference between the pavement and shoulder slopes will not be greater than 8%.

## GENERAL NOTES

Except as noted or shown, the dimensions and notes specified for the shoulder of the tangent pavement are typical for the shoulders of superelevated pavement.

Transverse expansion joints shall be as detailed on Standard 420001 except that dowel bars will not be required.

See Standard 420001 for details not shown.

All dimensions are in inches (millimeters) unless otherwise shown.

Illinois Department of Transportation

PASSED January, 1 2008
ENGINEER OF POLICY AND PROCEDURES
APPROVED January 1, 2008
ENGINEER OF DESIGN AND ENVIRONMENT

ISSUED 1-1-97

| DATE | REVISIONS |
|---|---|
| 1-1-08 | Switched units to |
| | English (metric). |
| | |
| 1-1-07 | Required subbase gran. |
| | material, Type C under |
| | shoulder. |

# PCC SHOULDER

## STANDARD 483001–04

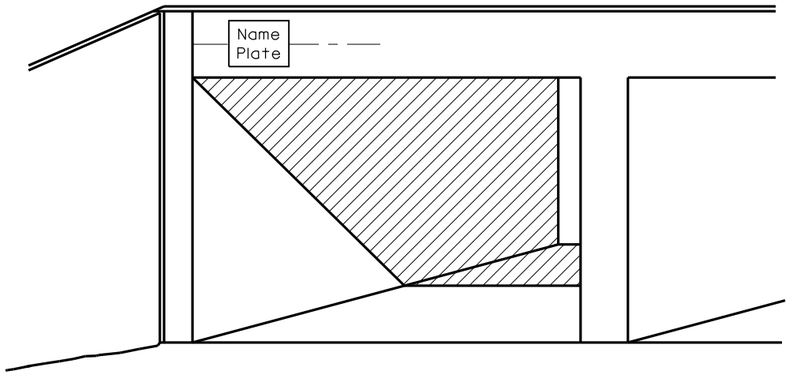


## FOR MULTI–SPAN CULVERTS

(Unless otherwise noted on the plans, name plates are not required for stuctures less than 20′ (6.1 m) in length)

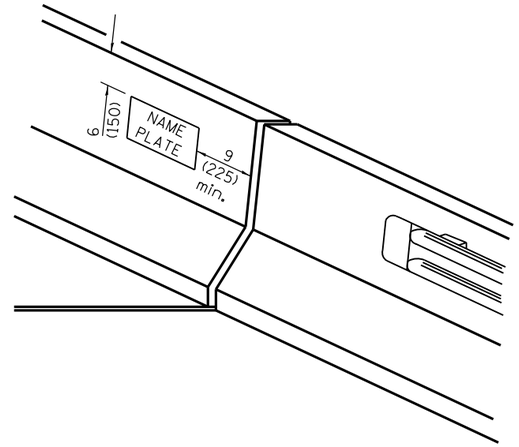


## FOR PARAPET AND END POST MOUNTED

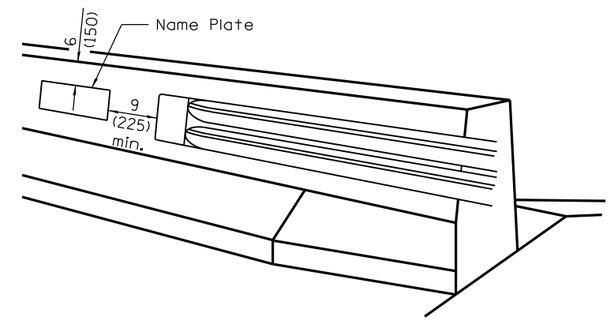


## FOR PARAPET

(When Dog Ear Wing is used)

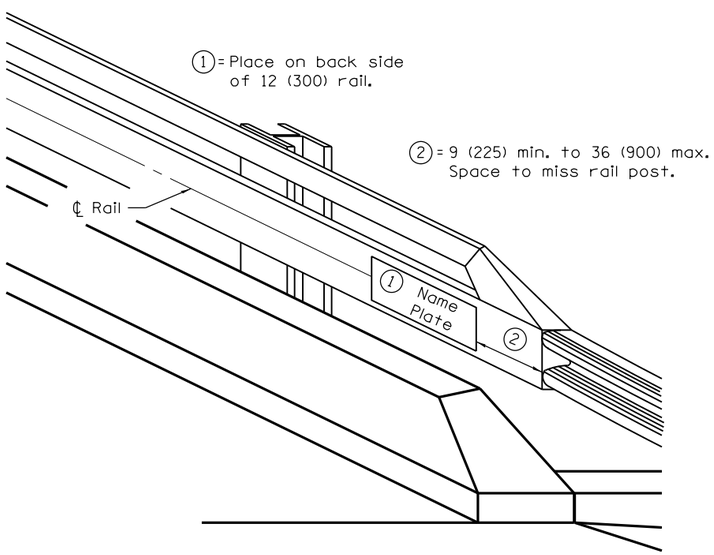


## FOR STEEL RAILS

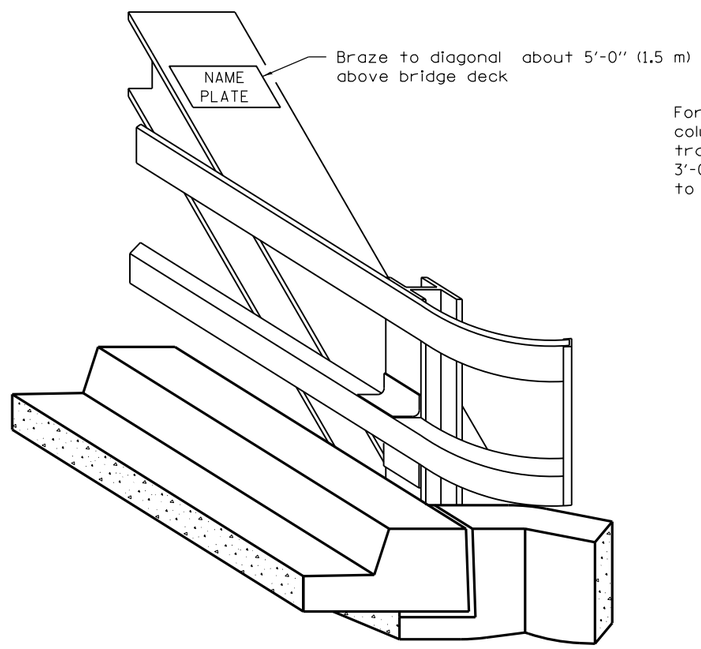


## FOR TRUSSES

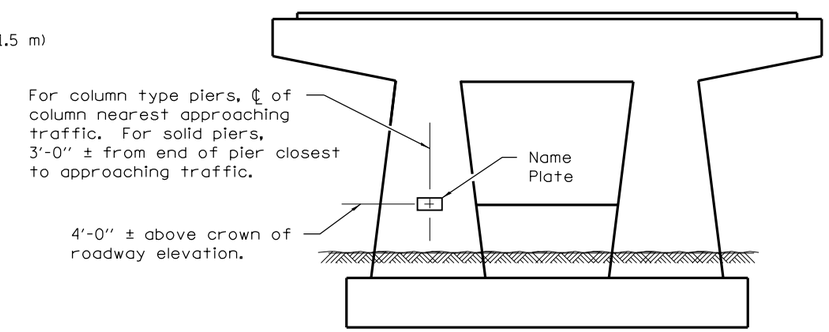


## FOR PIERS ON FAI ROUTES

## GENERAL NOTES

On one-way traffic structures, place name plate on right side of approach end. On two-way traffic structures, place name plate on right side of approach end while looking in the direction of increasing stationing.

All dimensions are in inches (millimeters) unless otherwise shown.

Illinois Department of Transportation

APPROVED January 1, 2009
ENGINEER OF BRIDGES AND STRUCTURES

APPROVED January 1, 2009
ENGINEER OF DESIGN AND ENVIRONMENT

ISSUED 1-1-97

| DATE | REVISIONS |
|---|---|
| 1-1-09 | Switched units to |
| | English (metric). Added |
| | pier detail. |
| 1-1-02 | Remove Placing: note on |
| | sht. 2. Added Braze to |
| | diag. note on sht. 1. |

# NAME PLATE FOR BRIDGES

(Sheet 1 of 2)

**STANDARD 515001–03**

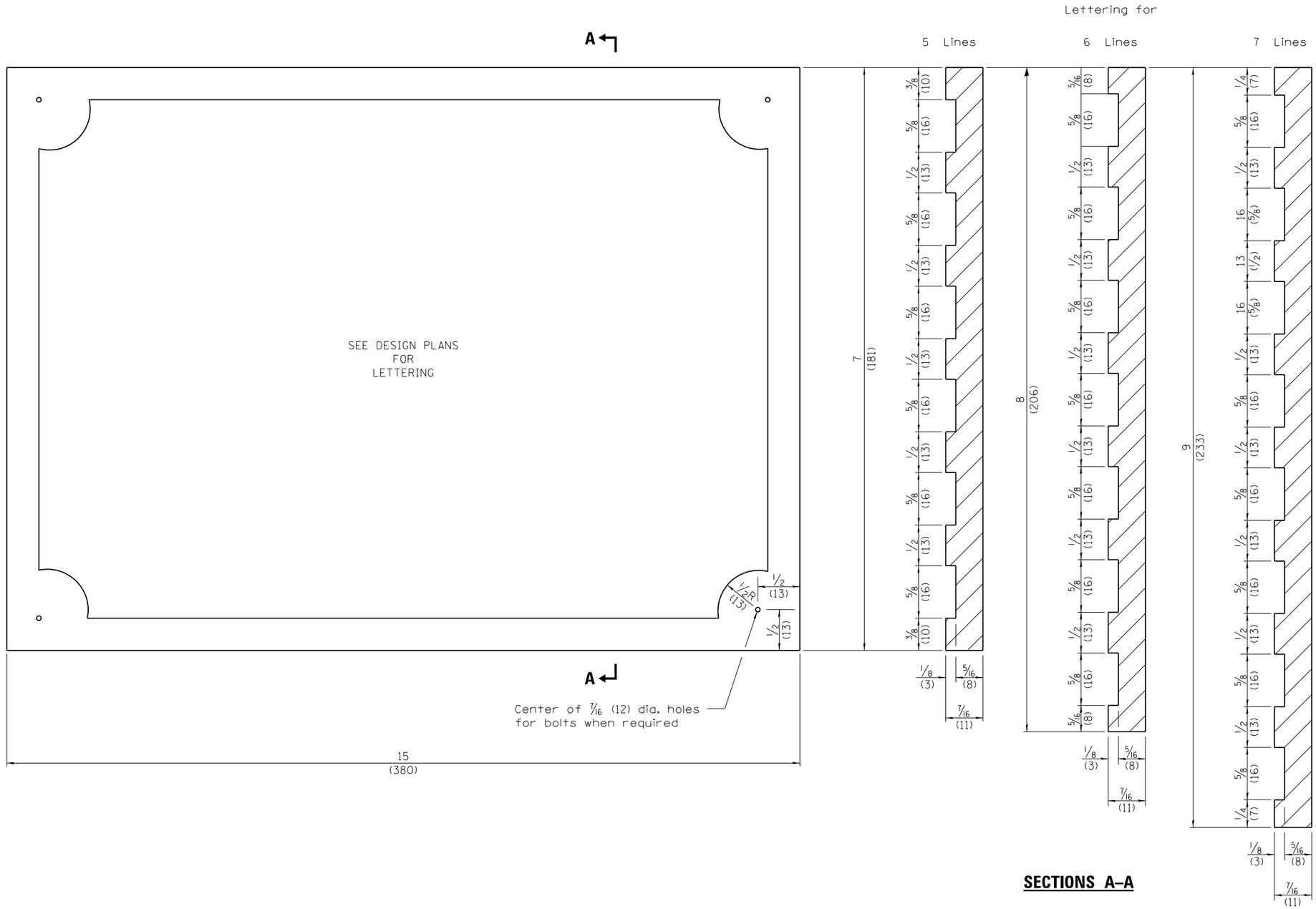


NOTE
Border and lettering:
Raised 1/8 (3), square cut and not tapered.

Illinois Department of Transportation

APPROVED January 1, 2009
Ralph E. Anderson
ENGINEER OF BRIDGES AND STRUCTURES

APPROVED January 1, 2009
Eric E. Harm
ENGINEER OF DESIGN AND ENVIRONMENT

ISSUED 1-1-97

# NAME PLATE FOR BRIDGES

(Sheet 2 of 2)

**STANDARD 515001–03**

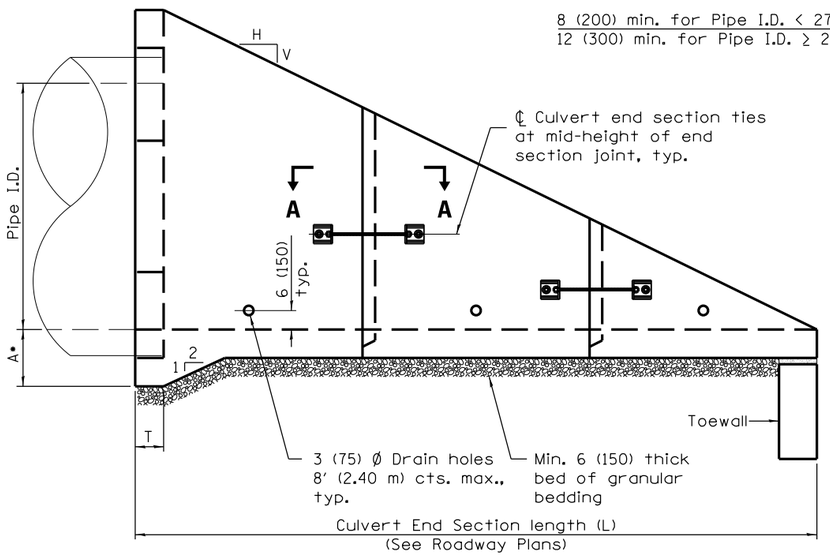


## ELEVATION

• This dimension shall be increased by 1½ (38) for CIP field construction. See General Notes.

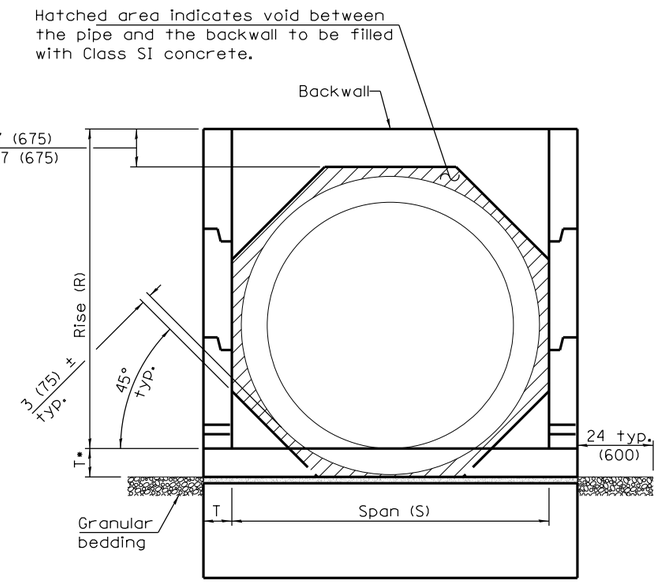


## END VIEW

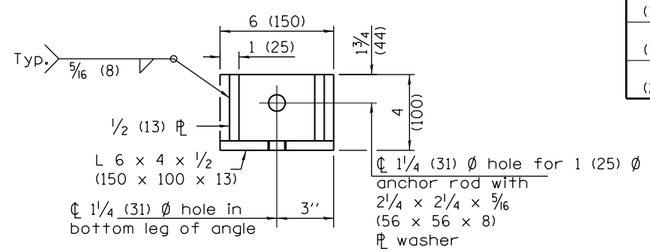


## RESTRAINT ANGLE DETAIL

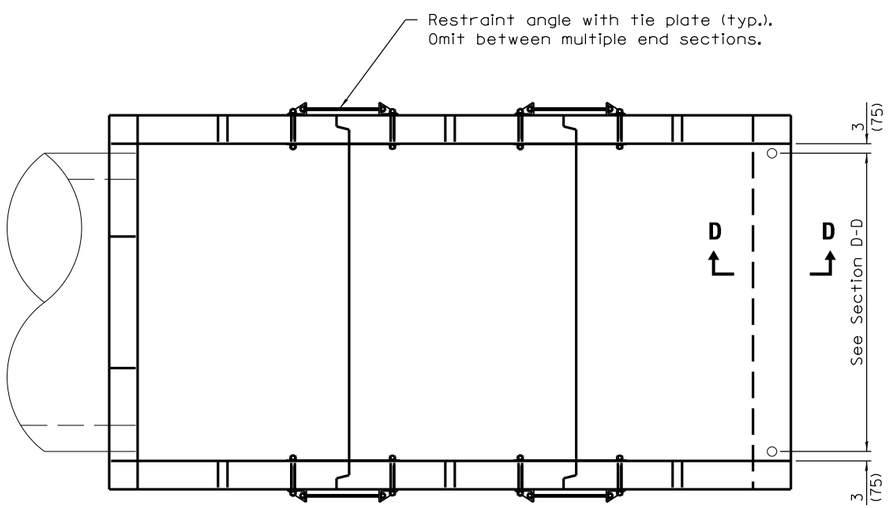


## PLAN

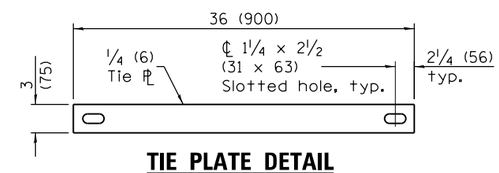


## TIE PLATE DETAIL

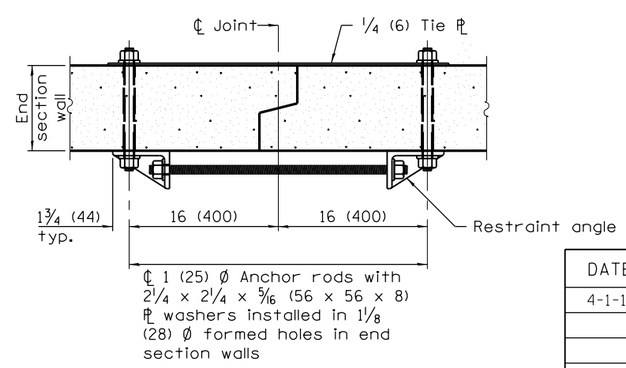


## SECTION A–A

(Showing end section tie details)

## PIPE CULVERT END SECTION DIMENSIONS

| Pipe I.D. | A | R | S | T | L Slope of End Section 1:2 | 1:3 | 1:4 | 1:6 |
|---|---|---|---|---|---|---|---|---|
| 15 (375) | 14 (350) | 29 (737) | 28 (711) | 8 (200) | 5′-6″ (1.68 m) | 7′-11″ (2.42 m) | 10′-4″ (3.16 m) | 15′-2″ (4.63 m) |
| 18 (450) | 15 (375) | 33 (838) | 32 (813) | 8 (200) | 6′-2″ (1.88 m) | 8′-11″ (2.72 m) | 11′-8″ (3.56 m) | 17′-2″ (5.24 m) |
| 21 (525) | 15 (375) | 36 (914) | 34 (864) | 8 (200) | 6′-8″ (2.03 m) | 9′-8″ (2.95 m) | 12′-8″ (3.86 m) | 18′-8″ (5.69 m) |
| 24 (600) | 15 (375) | 39 (990) | 38 (970) | 8 (200) | 7′-2″ (2.19 m) | 10′-5″ (3.18 m) | 13′-8″ (4.17 m) | 20′-2″ (6.15 m) |
| 27 (675) | 15 (375) | 3′-10″ (1.17 m) | 3′-6″ (1.07 m) | 8 (200) | 8′-4″ (2.54 m) | 12′-2″ (3.71 m) | 16′-0″ (4.88 m) | 23′-8″ (7.21 m) |
| 30 (750) | 16 (400) | 4′-2″ (1.27 m) | 3′-10″ 1.17 m) | 8 (200) | 9′-0″ (2.75 m) | 13′-2″ (4.02 m) | 17′-4″ (5.29 m) | 25′-8″ (7.83 m) |
| 33 (825) | 16 (400) | 4′-5″ (1.35 m) | 4′-0″ (1.22 m) | 8 (200) | 9′-6″ (2.90 m) | 13′-11″ (4.25 m) | 18′-4″ (5.60 m) | 27′-2″ (8.29 m) |
| 36 (900) | 16 (400) | 4′-8″ (1.42 m) | 4′-4″ (1.32 m) | 8 (200) | 10′-0″ (3.05 m) | 14′-8″ (4.47 m) | 19′-4″ (5.90 m) | 28′-8″ (8.74 m) |
| 42 (1050) | 17 (425) | 5′-3″ (1.60 m) | 5′-0″ (1.52 m) | 8 (200) | 11′-2″ (3.41 m) | 16′-5″ (5.01 m) | 21′-8″ (6.61 m) | 32′-2″ (9.81 m) |
| 48 (1200) | 17 (425) | 5′-9″ (1.75 m) | 5′-6″ (1.68 m) | 8 (200) | 12′-2″ (3.71 m) | 17′-11″ (5.46 m) | 23′-8″ (7.22 m) | 35′-2″ (10.73 m) |
| 54 (1350) | 18 (450) | 6′-4″ (1.93 m) | 6′-2″ (1.88 m) | 8 (200) | 13′-4″ (4.07 m) | 19′-8″ (6.00 m) | 26′-0″ (7.93 m) | 38′-8″ (11.79 m) |
| 60 (1500) | 18 (450) | 6′-10″ (2.08 m) | 6′-8″ (2.03 m) | 8 (200) | 14′-4″ (4.37 m) | 21′-2″ (6.46 m) | 28′-0″ (8.54 m) | 41′-8″ (12.71 m) |
| 66 (1650) | 19 (475) | 7′-5″ (2.26 m) | 7′-4″ (2.24 m) | 8 (200) | 15′-6″ (4.73 m) | 22′-11″ (6.99 m) | 30′-4″ (9.26 m) | 45′-2″ (13.78 m) |
| 72 (1800) | 19 (475) | 7′-11″ (2.41 m) | 7′-10″ (2.39 m) | 8 (200) | 16′-6″ (5.03 m) | 24′-5″ (7.45 m) | 32′-4″ (9.87 m) | 48′-2″ (14.70 m) |
| 78 (1950) | 21 (525) | 8′-6″ (2.59 m) | 8′-6″ (2.59 m) | 9 (230) | 17′-9″ (5.41 m) | 26′-3″ (8.01 m) | 34′-9″ (10.60 m) | 51′-9″ (15.78 m) |
| 84 (2100) | 21 (525) | 9′-0″ (2.74 m) | 9′-0″ (2.74 m) | 9 (230) | 18′-9″ (5.72 m) | 27′-9″ (8.46 m) | 36′-9″ (11.21 m) | 54′-9″ (16.70 m) |

## GENERAL NOTES

The number of segments shown in elevation is for example only. The length and number of precast sections required to construct the end section shall be determined by the Contractor.

See roadway plans for slope (V:H) and pipe inside diameter.

End section may be installed up to ± 15 degrees skewed with roadway.

2¼ x 2¼ x 5/16 (56 x 56 x 8) plate washers shall be provided under each nut required for the anchor rods. Holes in the walls for the culvert tie assembly may be drilled using core bits in lieu of formed holes.

See Standard 542311 for end sections having traversable pipe grate.

All slope ratios are expressed as units of vertical displacement to units of horizontal displacement (V:H).

All dimensions are in inches (millimeters) unless otherwise shown.

Illinois Department of Transportation

APPROVED April 1, 2016
ENGINEER OF BRIDGES AND STRUCTURES

APPROVED April 1, 2016
ENGINEER OF DESIGN AND ENVIRONMENT

ISSUED 1-1-97

| DATE | REVISIONS |
|---|---|
| 4-1-16 | Added note to omit |
| | restraint angle and tie |
| | plate for mult. end sections. |
| 1-1-14 | Corrected L for 1:3 slope |
| | and 60 (1500) pipe in table. |
| | Corrected some metric val's. |

**CONCRETE END SECTIONS FOR PIPE CULVERTS 15″ (375 mm) THRU 84″ (2100 mm) DIA.**

(Sheet 1 of 3)

**STANDARD 542001–05**

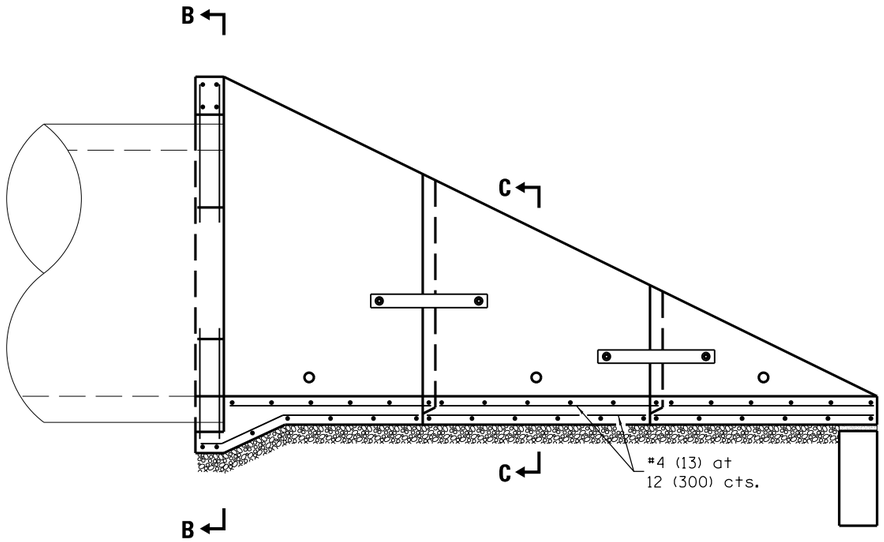


## LONGITUDINAL SECTION

(Showing bottom slab and backwall reinforcement.)

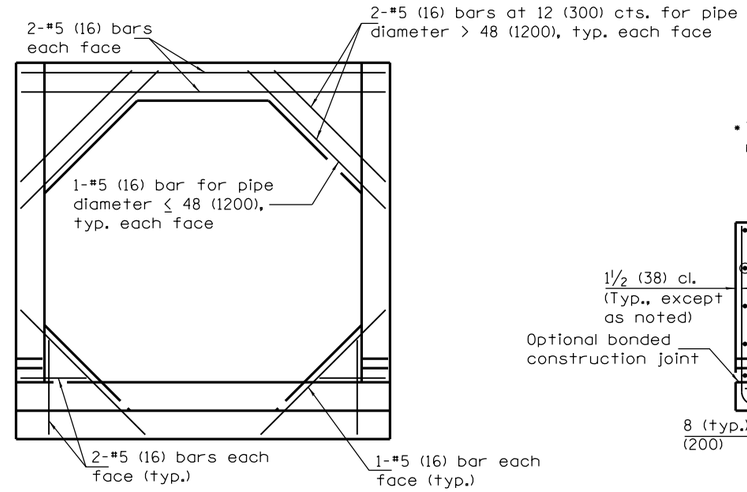


## SECTION B–B

(Showing backwall reinforcement only.)
(Pipe omitted for clarity.)

## LAP DIMENSION

#4 (13) bar = 17 (425)
#5 (16) bar = 21 (525)
#6 (19) bar = 25 (625)

• The Contractor may use lap splices for the sidewall reinforcement at the locations shown.

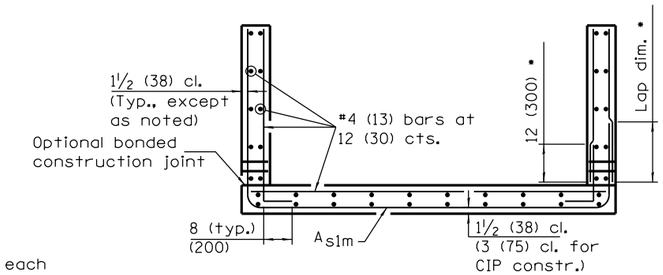


## SECTION C–C

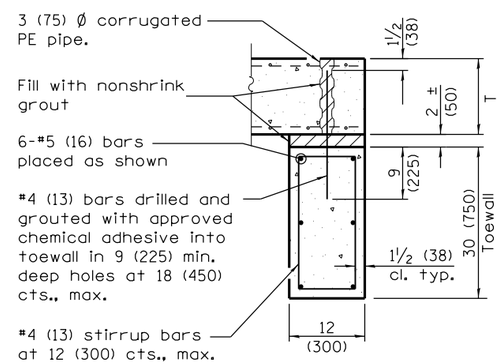


## SECTION D–D

## REINFORCEMENT SCHEDULE

| Pipe I.D. | Asim Bar Size | Asim Bar Spacing |
|---|---|---|
| 15 (375) | 4 (13) | 12 (300) |
| 18 (450) | 4 (13) | 12 (300) |
| 21 (525) | 4 (13) | 12 (300) |
| 24 (600) | 4 (13) | 12 (300) |
| 27 (675) | 4 (13) | 12 (300) |
| 30 (750) | 4 (13) | 12 (300) |
| 33 (825) | 4 (13) | 12 (300) |
| 36 (900) | 4 (13) | 12 (300) |
| 42 (1050) | 4 (13) | 8 (200) |
| 48 (1200) | 4 (13) | 8 (200) |
| 54 (1350) | 5 (16) | 8 (200) |
| 60 (1500) | 5 (16) | 8 (200) |
| 66 (1650) | 5 (16) | 8 (200) |
| 72 (1800) | 6 (19) | 8 (200) |
| 78 (1950) | 6 (19) | 8 (200) |
| 84 (2100) | 6 (19) | 8 (200) |

Illinois Department of Transportation

APPROVED April 1, 2016
ENGINEER OF BRIDGES AND STRUCTURES
APPROVED April 1, 2016
ENGINEER OF DESIGN AND ENVIRONMENT

ISSUED 1-1-97

**CONCRETE END SECTIONS FOR PIPE CULVERTS**
**15" (375 mm) THRU 84" (2100 mm) DIA.**

(Sheet 2 of 3)

**STANDARD 542001–05**

## QUANTITIES

| Pipe I.D. | Concrete yd³ (m³) ① | | | | Reinforcement Without Lap lbs. (kg) | | | | Reinforcement With Lap lbs (kg) | | | |
|---|---|---|---|---|---|---|---|---|---|---|---|---|
| | Slope of End Section | | | | Slope of End Section | | | | Slope of End Section | | | |
| | 1:2 | 1:3 | 1:4 | 1:6 | 1:2 | 1:3 | 1:4 | 1:6 | 1:2 | 1:3 | 1:4 | 1:6 |
| 15 (375) | 1.3 (1.0) | 1.7 (1.3) | 2.1 (1.6) | 2.8 (2.1) | 190 (85.2) | 230 (104.1) | 280 (123.3) | 360 (159.2) | 210 (94.9) | 260 (117.6) | 310 (140.3) | 410 (182.9) |
| 18 (450) | 1.6 (1.2) | 2.1 (1.6) | 2.6 (2.0) | 3.5 (2.7) | 230 (104.3) | 290 (131.1) | 350 (158.0) | 460 (207.3) | 260 (114.8) | 330 (146.0) | 400 (177.3) | 520 (234.0) |
| 21 (525) | 1.8 (1.4) | 2.3 (1.8) | 2.9 (2.2) | 3.9 (3.0) | 260 (114.5) | 320 (143.3) | 380 (172.2) | 510 (229.9) | 280 (126.5) | 360 (159.7) | 430 (193.0) | 580 (259.5) |
| 24 (600) | 2.1 (1.6) | 2.7 (2.1) | 3.3 (2.5) | 4.5 (3.4) | 270 (121.9) | 350 (155.8) | 420 (189.3) | 560 (251.5) | 300 (133.9) | 390 (172.8) | 470 (211.6) | 630 (282.6) |
| 27 (675) | 2.6 (2.0) | 3.4 (2.6) | 4.2 (3.2) | 5.8 (4.4) | 350 (155.5) | 440 (198.5) | 540 (244.4) | 740 (336.3) | 380 (169.6) | 480 (217.8) | 600 (269.6) | 830 (373.2) |
| 30 (750) | 2.9 (2.2) | 3.9 (3.0) | 4.9 (3.7) | 6.8 (5.2) | 380 (169.6) | 490 (219.2) | 600 (271.9) | 830 (374.0) | 410 (184.5) | 530 (240.0) | 660 (299.2) | 920 (413.9) |
| 33 (825) | 3.2 (2.4) | 4.3 (3.3) | 5.3 (4.1) | 7.4 (5.7) | 400 (179.7) | 520 (234.9) | 640 (290.3) | 880 (397.6) | 430 (195.2) | 570 (257.2) | 710 (319.0) | 970 (438.9) |
| 36 (900) | 3.5 (2.7) | 4.7 (3.6) | 5.9 (4.5) | 8.3 (6.3) | 440 (197.8) | 580 (262.4) | 720 (323.8) | 990 (449.4) | 480 (214.2) | 630 (286.1) | 780 (354.0) | 1090 (493.7) |
| 42 (1050) | 4.3 (3.3) | 5.8 (4.4) | 7.3 (5.6) | 10.3 (7.9) | 570 (256.4) | 770 (346.4) | 950 (429.0) | 1330 (601.3) | 620 (279.4) | 840 (380.0) | 1040 (471.6) | 1470 (663.7) |
| 48 (1200) | 5.0 (3.8) | 6.8 (5.2) | 8.6 (6.6) | 12.2 (9.3) | 670 (301.1) | 910 (409.9) | 1140 (514.8) | 1610 (728.2) | 720 (325.6) | 990 (445.8) | 1240 (561.2) | 1760 (796.8) |
| 54 (1350) | 6.0 (4.6) | 8.2 (6.3) | 10.3 (7.9) | 14.7 (11.2) | 890 (403.6) | 1200 (544.5) | 1530 (692.0) | 2170 (985.0) | 990 (448.6) | 1340 (608.1) | 1710 (775.8) | 2440 (1108.2) |
| 60 (1500) | 6.8 (5.2) | 9.3 (7.1) | 11.8 (9.0) | 16.8 (12.8) | 1020 (461.5) | 1400 (635.3) | 1780 (806.8) | 2530 (1149.8) | 1120 (508.8) | 1550 (704.5) | 1980 (896.8) | 2820 (1281.5) |
| 66 (1650) | 7.9 (6.0) | 10.9 (8.3) | 13.8 (10.6) | 19.7 (15.1) | 1150 (519.0) | 1570 (712.4) | 2010 (911.1) | 2880 (1305.8) | 1260 (570.2) | 1730 (786.1) | 2220 (1007.9) | 3190 (1449.3) |
| 72 (1800) | 8.8 (6.7) | 12.2 (9.3) | 15.5 (11.9) | 22.2 (17.0) | 1520 (689.9) | 2120 (962.1) | 2690 (1222.5) | 3880 (1761.3) | 1710 (777.0) | 2400 (1088.2) | 3050 (1384.8) | 4410 (2001.0) |
| 78 (1950) | 11.4 (8.7) | 15.8 (12.1) | 20.1 (15.4) | 28.9 (22.1) | 1750 (791.1) | 2400 (1090.7) | 3100 (1409.0) | 4490 (2039.7) | 1950 (885.5) | 2700 (1223.1) | 3490 (1583.9) | 5060 (2298.9) |
| 84 (2100) | 12.6 (9.6) | 17.4 (13.3) | 22.3 (17.0) | 32.1 (24.5) | 1900 (862.7) | 2680 (1217.4) | 3430 (1558.6) | 4960 (2254.4) | 2120 (959.6) | 3000 (1359.6) | 3840 (1743.2) | 5560 (2526.8) |

① For cast-in-place construction, increase concrete volumes by approximately 12%.

Illinois Department of Transportation

APPROVED April 1, 2016
ENGINEER OF BRIDGES AND STRUCTURES

APPROVED April 1, 2016
ENGINEER OF DESIGN AND ENVIRONMENT

ISSUED 1-1-97

**CONCRETE END SECTIONS FOR PIPE CULVERTS**
**15" (375 mm) THRU 84" (2100 mm) DIA.**

(Sheet 3 of 3)

**STANDARD 542001–05**

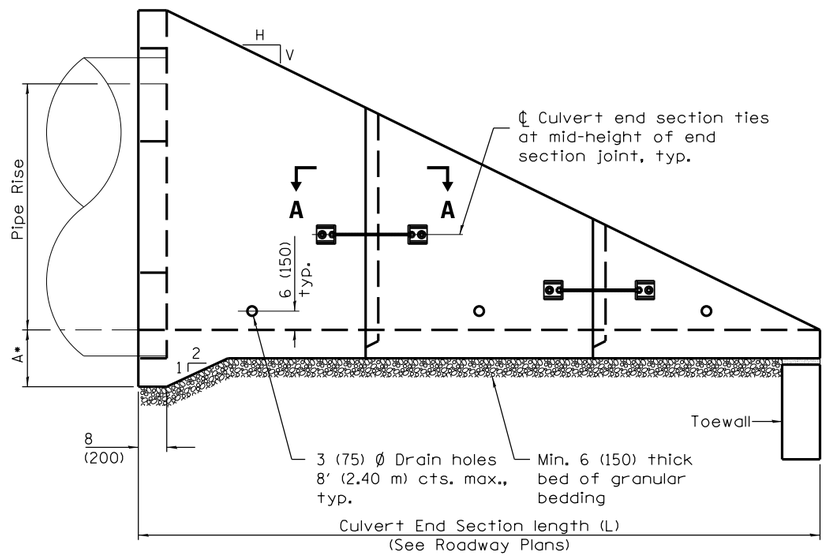


## ELEVATION

• This dimension shall be increased by 1½ (38) for CIP field construction.

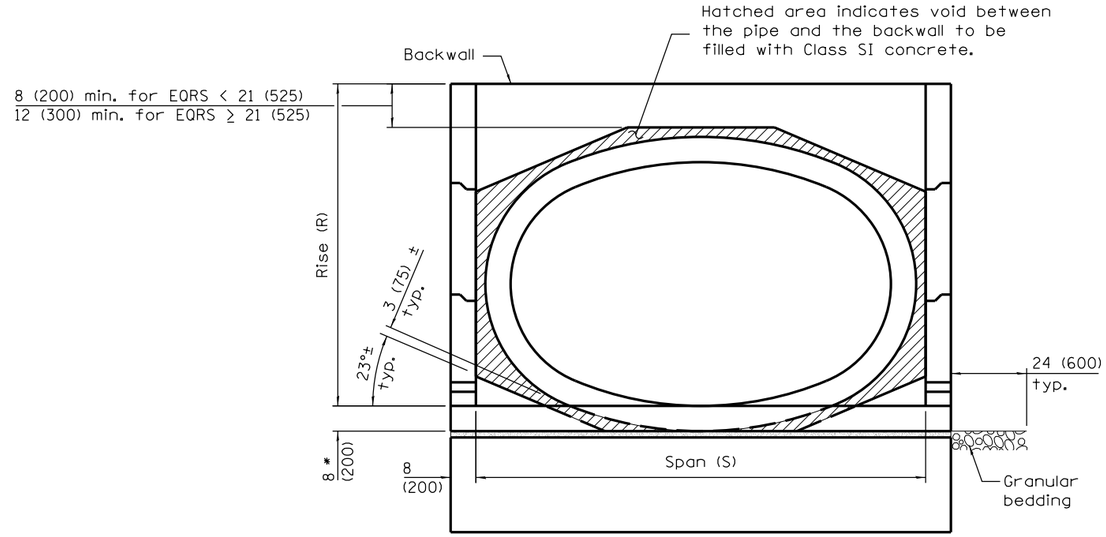


## END VIEW

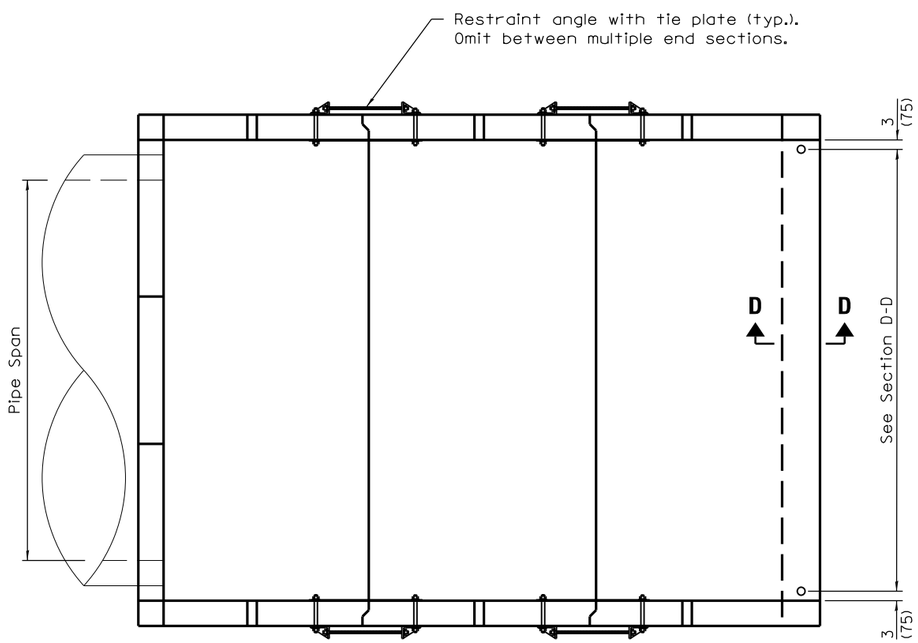


## PLAN

## PIPE CULVERT END SECTION DIMENSIONS

| Equivalent Round Size Pipe I.D. | Pipe Span | Pipe Rise | A | R | S | L | | | |
|---|---|---|---|---|---|---|---|---|---|
| | | | | | | Slope of End Section | | | |
| | | | | | | 1:2 | 1:3 | 1:4 | 1:6 |
| 15 (375) | 23 (575) | 14 (350) | 15 (375) | 28 (711) | 36 (914) | 5′-4″ (1.62 m) | 7′-8″ (2.34 m) | 10′-0″ (3.05 m) | 14′-8″ (4.47 m) |
| 18 (450) | 23 (575) | 14 (350) | 15 (375) | 28 (711) | 36 (914) | 5′-4″ (1.62 m) | 7′-8″ (2.34 m) | 10′-0″ (3.05 m) | 14′-8″ (4.47 m) |
| 21 (525) | 30 (750) | 19 (475) | 15 (375) | 38 (365) | 3′-8″ (1.12 m) | 7′-0″ (2.14 m) | 10′-2″ (3.10 m) | 13′-4″ (4.07 m) | 19′-8″ (6.00 m) |
| 24 (600) | 30 (750) | 19 (475) | 15 (375) | 38 (965) | 3′-8″ (1.12 m) | 7′-0″ (2.14 m) | 10′-2″ (3.10 m) | 13′-4″ (4.07 m) | 19′-8″ (6.00 m) |
| 27 (675) | 34 (850) | 22 (550) | 15 (375) | 3′-5″ (1.04 m) | 4′-0″ (1.22 m) | 7′-6″ (2.29 m) | 10′-11″ (3.33 m) | 14′-4″ (4.38 m) | 21′-2″ (6.46 m) |
| 30 (750) | 38 (950) | 24 (600) | 15 (375) | 3′-7″ (1.09 m) | 4′-4″ (1.32 m) | 7′-10″ (2.39 m) | 11′-5″ (3.48 m) | 15′-0″ (4.57 m) | 22′-2″ (6.75 m) |
| 36 (900) | 45 (1125) | 29 (725) | 16 (400) | 4′-1″ (1.24 m) | 5′-0″ (1.52 m) | 8′-10″ (2.69 m) | 12′-11″ (3.94 m) | 17′-0″ (5.18 m) | 25′-2″ (7.67 m) |
| 42 (1050) | 53 (1325) | 34 (850) | 16 (400) | 4′-6″ (1.37 m) | 5′-10″ (1.78 m) | 9′-8″ (2.95 m) | 14′-2″ (4.32 m) | 18′-8″ (5.69 m) | 27′-8″ (8.44 m) |
| 48 (1200) | 60 (1500) | 38 (950) | 17 (425) | 4′-11″ (1.50 m) | 6′-6″ (1.98 m) | 10′-6″ (3.20 m) | 15′-5″ (4.71 m) | 20′-4″ (6.21 m) | 30′-2″ (9.21 m) |
| 54 (1350) | 68 (1700) | 43 (1075) | 17 (425) | 5′-4″ (1.63 m) | 7′-2″ (2.18 m) | 11′-4″ (3.45 m) | 16′-8″ (5.08 m) | 22′-0″ (6.71 m) | 32′-8″ (9.96 m) |
| 60 (1500) | 76 (1900) | 48 (1200) | 18 (450) | 5′-10″ (1.78 m) | 8′-0″ (2.44 m) | 12′-4″ (3.76 m) | 18′-2″ (5.54 m) | 24′-0″ (7.32 m) | 35′-8″ (10.87 m) |
| 66 (1650) | 83 (2075) | 53 (1325) | 18 (450) | 6′-3″ (1.91 m) | 8′-8″ (2.64 m) | 13′-2″ (4.02 m) | 19′-5″ (5.92 m) | 25′-8″ (7.83 m) | 38′-2″ (11.64 m) |
| 72 (1800) | 91 (2275) | 58 (1450) | 19 (475) | 6′-9″ (2.06 m) | 9′-4″ (2.84 m) | 14′-2″ (4.32 m) | 20′-11″ (6.38 m) | 27′-8″ (8.44 m) | 41′-2″ (12.56 m) |

See Sheet 3 for GENERAL NOTES.

Illinois Department of Transportation

APPROVED April 1, 2016
ENGINEER OF BRIDGES AND STRUCTURES

APPROVED April 1, 2016
ENGINEER OF DESIGN AND ENVIRONMENT

ISSUED 1-1-13

| DATE | REVISIONS |
|---|---|
| 4-1-16 | Added note to omit |
| | restraint angle and tie |
| | plate for mult. end sections. |
| 1-1-13 | New standard. |

# CONCRETE END SECTIONS FOR ELLIPTICAL PIPE CULVERTS 15″ (375 mm) THRU 72″ (1800 mm) EQUIVALENT DIAMETER

(Sheet 1 of 3)

**STANDARD 542011–01**

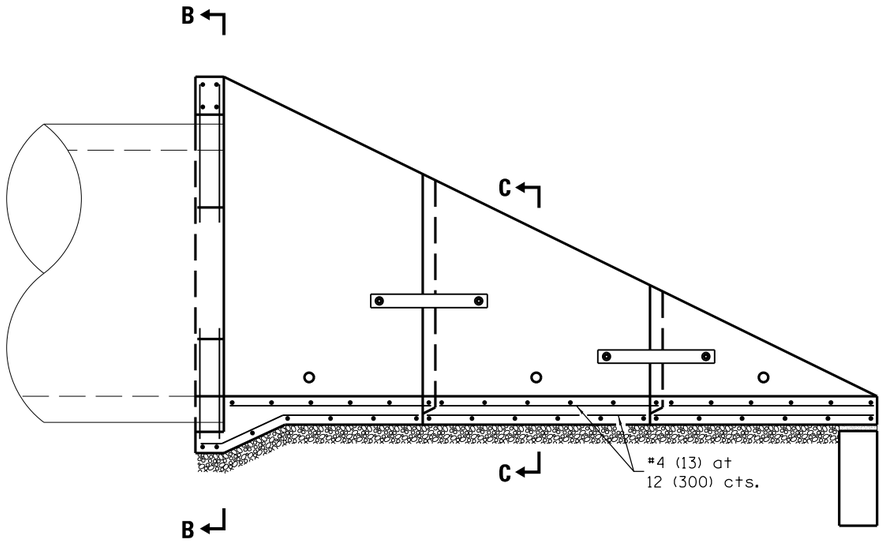


## LONGITUDINAL SECTION

(Showing bottom slab and backwall reinforcement.)

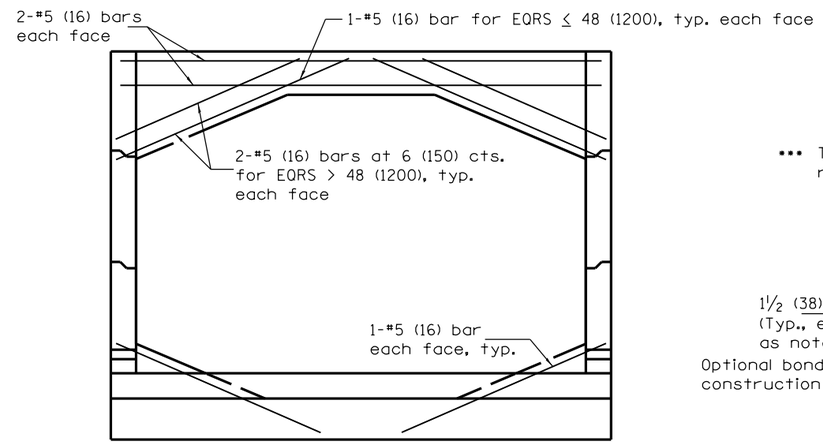


## SECTION B–B

(Showing backwall reinforcement only.)
(Pipe omitted for clarity.)

## LAP DIMENSION

#4 (13) bar = 17 (425)
#5 (16) bar = 21 (525)
#6 (19) bar = 25 (625)

••• The Contractor may use lap splices for the sidewall reinforcement at the locations shown.

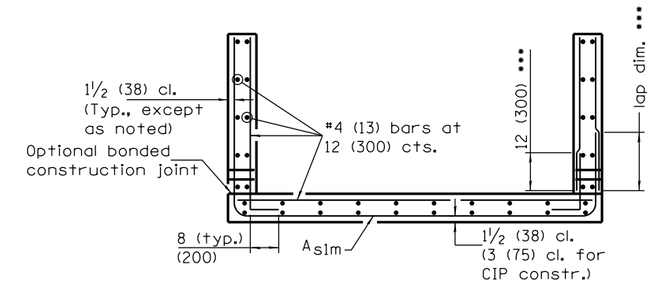


## SECTION C–C

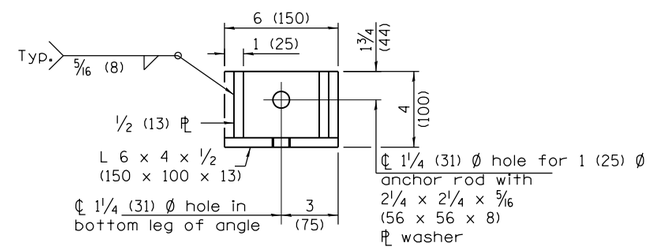


## RESTRAINT ANGLE DETAIL

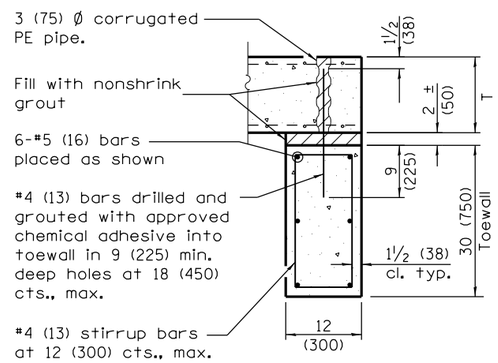


## SECTION D–D

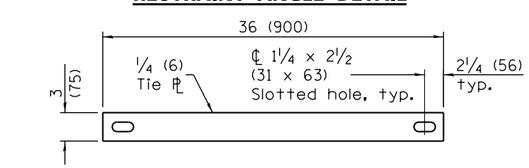


## TIE PLATE DETAIL

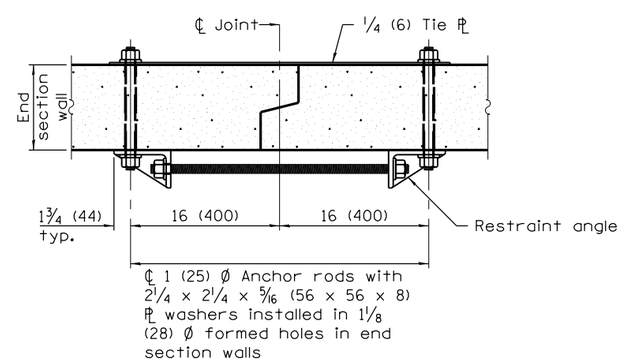


## SECTION A–A

(Showing end section tie details)

## REINFORCEMENT SCHEDULE

| Equivalent Round Size Pipe I.D. | $A_{slm}$ | |
|---|---|---|
| | Bar Size | Bar Spacing |
| 15 (375) | 4 (13) | 12 (300) |
| 18 (450) | 4 (13) | 12 (300) |
| 21 (525) | 4 (13) | 12 (300) |
| 24 (600) | 4 (13) | 12 (300) |
| 27 (700) | 4 (13) | 12 (300) |
| 30 (750) | 4 (13) | 12 (300) |
| 36 (900) | 4 (13) | 12 (300) |
| 42 (1050) | 4 (13) | 12 (300) |
| 48 (1200) | 4 (13) | 8 (200) |
| 54 (1350) | 4 (13) | 8 (200) |
| 60 (1500) | 4 (13) | 8 (200) |
| 66 (1650) | 5 (16) | 8 (200) |
| 72 (1800) | 5 (16) | 8 (200) |

Illinois Department of Transportation

APPROVED April 1, 2016
ENGINEER OF BRIDGES AND STRUCTURES
APPROVED April 1, 2016
ENGINEER OF DESIGN AND ENVIRONMENT

ISSUED 1-1-13

**CONCRETE END SECTIONS FOR ELLIPTICAL PIPE CULVERTS 15" (375 mm) THRU 72" (1800 mm) EQUIVALENT DIAMETER**

(Sheet 2 of 3)

**STANDARD 542011–01**

## QUANTITIES

| Equivalent Round Size Pipe I.D. | Concrete yd³ (m³) ① | | | | Reinforcement Without Lap lbs. (kg) | | | | Reinforcement With Lap lbs (kg) | | | |
|---|---|---|---|---|---|---|---|---|---|---|---|---|
| | Slope of End Section | | | | Slope of End Section | | | | Slope of End Section | | | |
| | 1:2 | 1:3 | 1:4 | 1:6 | 1:2 | 1:3 | 1:4 | 1:6 | 1:2 | 1:3 | 1:4 | 1:6 |
| 15 (375) | 1.5 (1.1) | 1.9 (1.6) | 2.3 (1.8) | 3.0 (2.3) | 220 (120.8) | 270 (148.3) | 320 (172.9) | 420 (228.5) | 240 (132.3) | 300 (164.3) | 350 (192.8) | 470 (257.4) |
| 18 (450) | 1.5 (1.3) | 1.9 (1.6) | 2.3 (1.8) | 3.0 (2.3) | 220 (120.8) | 270 (148.3) | 320 (172.9) | 420 (228.5) | 240 (132.3) | 300 (164.3) | 350 (192.8) | 470 (257.4) |
| 21 (525) | 2.2 (1.7) | 2.8 (2.1) | 3.5 (2.7) | 4.8 (3.7) | 310 (167.2) | 390 (172.9) | 470 (211.5) | 630 (285.2) | 330 (181.8) | 420 (189.3) | 520 (232.9) | 700 (316.3) |
| 24 (600) | 2.2 (1.7) | 2.8 (2.1) | 3.5 (2.7) | 4.8 (3.7) | 310 (167.2) | 390 (172.9) | 470 (211.5) | 630 (285.2) | 330 (181.8) | 420 (189.3) | 520 (232.9) | 700 (316.3) |
| 27 (700) | 2.5 (1.9) | 3.2 (2.4) | 3.9 (3.0) | 5.4 (4.1) | 330 (181.7) | 420 (190.1) | 510 (231.4) | 690 (310.5) | 360 (197.0) | 460 (208.0) | 560 (254.3) | 760 (343.1) |
| 30 (750) | 2.7 (2.1) | 3.5 (2.7) | 4.3 (3.3) | 5.9 (4.5) | 350 (193.1) | 450 (201.9) | 540 (244.9) | 730 (331.3) | 380 (209.5) | 490 (220.4) | 600 (268.7) | 810 (365.3) |
| 36 (900) | 3.3 (2.5) | 4.4 (3.4) | 5.4 (4.1) | 7.5 (5.7) | 430 (237.6) | 560 (252.2) | 690 (309.3) | 940 (423.4) | 470 (255.8) | 610 (273.0) | 740 (335.9) | 1020 (461.8) |
| 42 (1050) | 4.0 (3.1) | 5.3 (4.1) | 6.6 (5.0) | 9.2 (7.0) | 510 (279.8) | 660 (295.6) | 820 (369.1) | 1120 (508.5) | 550 (299.8) | 700 (317.9) | 880 (398.7) | 1220 (551.3) |
| 48 (1200) | 4.7 (3.6) | 6.2 (4.7) | 7.8 (6.0) | 10.9 (8.3) | 660 (362.5) | 870 (391.5) | 1070 (485.4) | 1490 (672.8) | 710 (389.5) | 940 (422.8) | 1160 (525.7) | 1610 (731.4) |
| 54 (1350) | 5.3 (4.1) | 7.2 (5.5) | 9.0 (6.9) | 12.6 (9.6) | 730 (400.1) | 960 (434.4) | 1190 (540.2) | 1670 (756.6) | 780 (428.9) | 1030 (467.9) | 1290 (583.7) | 1810 (820.5) |
| 60 (1500) | 6.3 (4.8) | 8.5 (6.5) | 10.7 (8.2) | 15.1 (11.5) | 830 (458.1) | 1110 (500.0) | 1390 (629.0) | 1950 (882.2) | 890 (488.7) | 1180 (535.9) | 1490 (676.2) | 2100 (951.4) |
| 66 (1650) | 7.1 (5.4) | 9.6 (7.3) | 12.2 (9.3) | 17.2 (13.2) | 1080 (596.0) | 1470 (665.5) | 1840 (836.2) | 2610 (1185.3) | 1180 (650.1) | 1610 (729.0) | 2030 (918.3) | 2880 (1306.3) |
| 72 (1800) | 8.2 (6.3) | 11.1 (8.5) | 14.0 (10.7) | 19.8 (14.9) | 1190 (653.9) | 1620 (734.2) | 2050 (931.6) | 2930 (1328.9) | 1290 (710.7) | 1770 (801.7) | 2250 (1019.9) | 3220 (1460.0) |

① For cast-in-place construction, increase concrete volumes by approximately 13%.

## GENERAL NOTES

The number of segments shown in elevation is for example only. The length and number of precast sections required to construct the end section shall be determined by the Contractor.

See roadway plans for slope (V:H) and pipe inside diameter.

End section may be installed up to ± 15 degrees skewed with roadway.

2¼ x 2¼ x 5/16 (56 x 56 x 8) plate washers shall be provided under each nut required for the anchor rods. Holes in the walls for the culvert tie assembly may be drilled using core bits in lieu of formed holes.

See Standard 542311 for end sections having traversable pipe grate.

All slope ratios are expressed as units of verical dispacement to units of horizontal displacement (V:H).

All dimensions are in inches (millimeters) unless otherwise shown.

Illinois Department of Transportation

APPROVED April 1, 2016
ENGINEER OF BRIDGES AND STRUCTURES

APPROVED April 1, 2016
ENGINEER OF DESIGN AND ENVIRONMENT

ISSUED 1-1-13

**CONCRETE END SECTIONS FOR ELLIPTICAL PIPE CULVERTS 15" (375 mm) THRU 72" (1800 mm) EQUIVALENT DIAMETER**

(Sheet 3 of 3)

**STANDARD 542011-01**

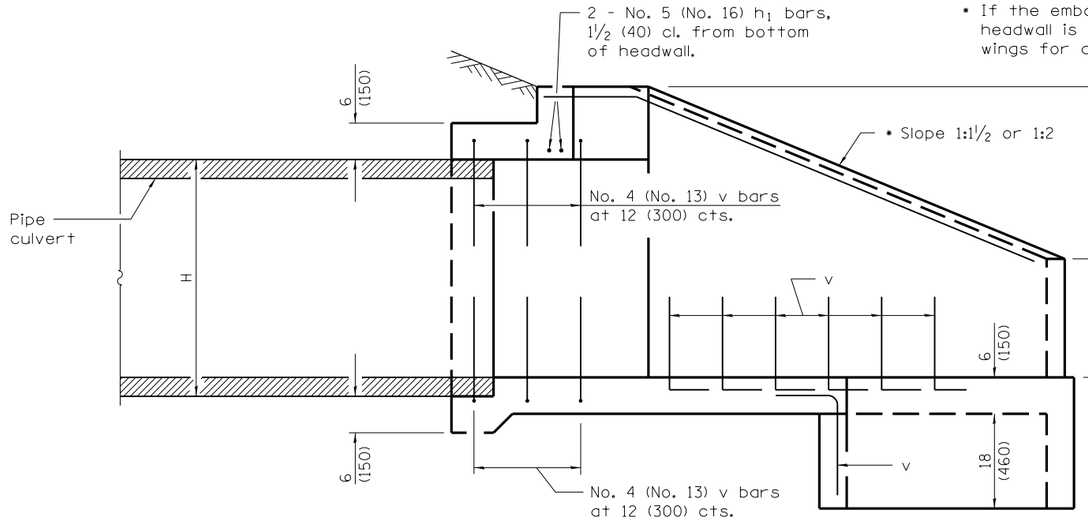


## SECTION A–A

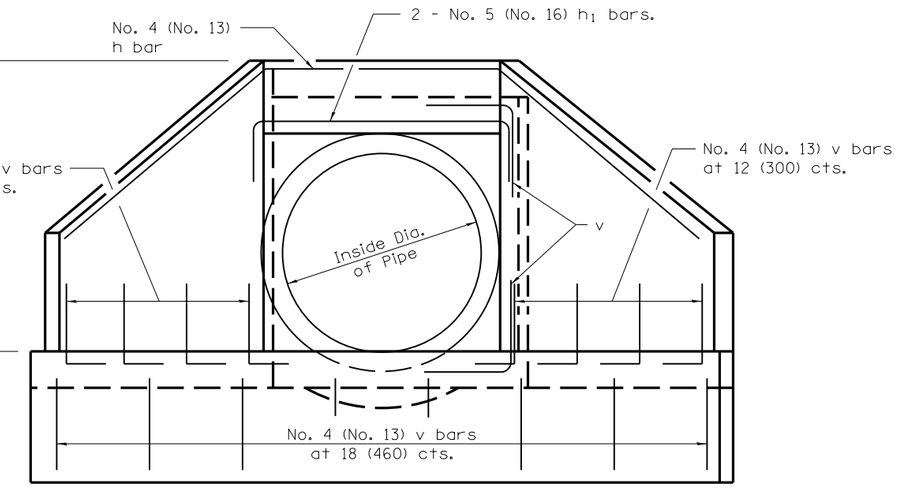


## END VIEW

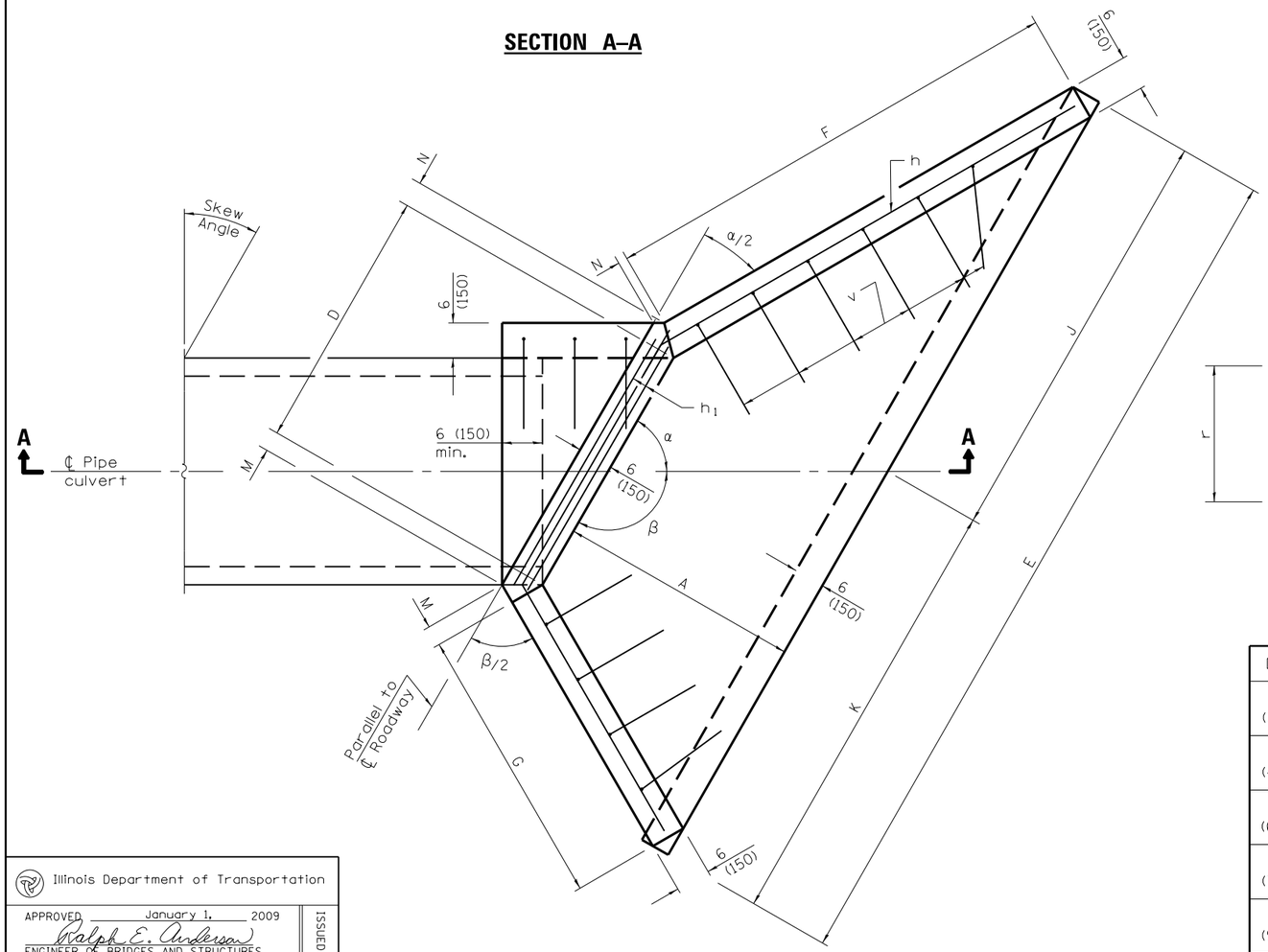


## PLAN

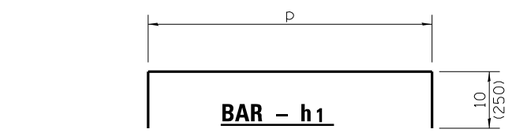


## BAR – $h_1$

Bent in field, two req. for each headwall.

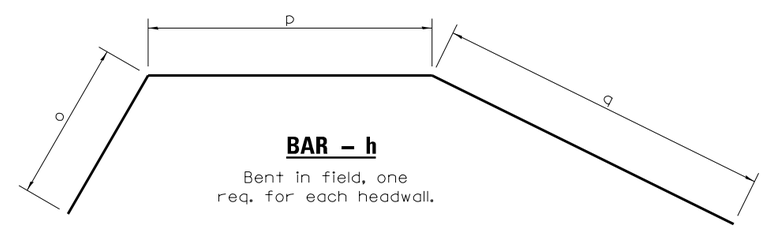


## BAR – h

Bent in field, one req. for each headwall.

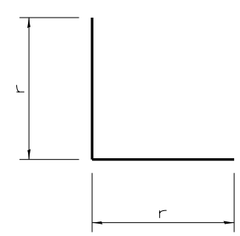


## BAR – v

| Dia. | r |
|---|---|
| 15 (375) | 21 (551) |
| 18 (450) | 24 (626) |
| 24 (600) | 30 (765) |
| 30 (750) | 36 (917) |
| 36 (900) | 3′-6″ (1.08 m) |

## GENERAL NOTES

Build tops of headwalls parallel to grade line.

All slope ratios are expressed as units of vertical displacement to units of horizontal displacement (V:H).

All dimensions are in inches (millimeters) unless otherwise shown.

Illinois Department of Transportation

APPROVED January 1, 2009
Ralph E. Anderson
ENGINEER OF BRIDGES AND STRUCTURES

APPROVED January 1, 2009
ENGINEER OF DESIGN AND ENVIRONMENT

ISSUED 1-1-97

| DATE | REVISIONS |
|---|---|
| 1-1-09 | Switched units to |
| | English (metric). |
| | |
| 1-1-07 | Soft converted metric |
| | reinforcement bars. |
| | Added $h_1$ bars. |

**REINFORCED CONCRETE END SECTIONS FOR PIPE CULVERTS 15″ (375 mm) THRU 36″ (900 mm) DIA. SKEWED WITH ROADWAY**

(Sheet 1 of 5)

**STANDARD 542201–02**

# WINGS FOR 1:1½ SLOPE

| Skew Angle | Design No. | Nominal Pipe Dia. | DIMENSIONS FOR CONCRETE | | | | | | | | | | | | | Concrete 2 End Sections yd³ (m³) | Reinf. Bars - 2 End Sections | | | | | | | Bars for 2 End Sections lbs. (kg) |
|---|---|---|---|---|---|---|---|---|---|---|---|---|---|---|---|---|---|---|---|---|---|---|---|---|
| | | | A | B | C | D | E | F | G | H | J | K | M | N | α | | h - bars | | | | $h_1$ - bars | | v-bars No. | |
| | | | | | | | | | | | | | | | | | o | p | q | Lgth. | p | Lgth. | | |
| 5° | DS 15-1½ (DS 375-1½) | 15 (375) | 28 (720) | 10 (260) | 29 (740) | 19 (485) | 6′-11¾″ (2.15 m) | 3′-5½″ (1.07 m) | 38 (980) | 19 (483) | 3′-5¾″ (1.07 m) | 3′-6″ (1.08 m) | 2¾ (70) | 2¼ (60) | 85° | 1.4 (1.1) | 3′-6″ (1.01 m) | 21 (551) | 3′-9″ (1.09 m) | 9′-0″ (2.65 m) | 21 (551) | 3′-5″ (1.04 m) | 28 | 90 (41) |
| | DS 18-1½ (DS 450-1½) | 18 (450) | 28 (720) | 13 (330) | 32 (810) | 22 (561) | 7′-2¾″ (2.22 m) | 3′-5½″ (1.07 m) | 38 (980) | 22 (559) | 3′-7¼″ (1.11 m) | 3′-7½″ (1.11 m) | 2¾ (70) | 2¼ (60) | 85° | 1.6 (1.2) | 3′-6″ (1.03 m) | 24 (626) | 3′-9″ (1.12 m) | 9′-3″ (2.78 m) | 24 (626) | 3′-8″ (1.12 m) | 28 | 100 (45) |
| | DS 24-1½ (DS 600-1½) | 24 (600) | 34 (870) | 16 (410) | 39 (990) | 30 (765) | 8′-10¾″ (2.73 m) | 4′-2¼″ (1.29 m) | 3′-10″ (1.18 m) | 30 (762) | 4′-5¼″ (1.36 m) | 4′-5½″ (1.37 m) | 2¾ (70) | 2¼ (60) | 85° | 2.2 (1.7) | 4′-3″ (1.23 m) | 32 (832) | 4′-7″ (1.33 m) | 11′-6″ (3.39 m) | 32 (832) | 4′-4″ (1.32 m) | 32 | 140 (63) |
| | DS 30-1½ (DS 750-1½) | 30 (750) | 39 (990) | 19 (480) | 3′-9″ (1140) | 36 (917) | 10′-3″ (3.12 m) | 4′-9¾″ (1.47 m) | 4′-5″ (1.35 m) | 36 (914) | 5′-1¼″ (1.56 m) | 5′-1¾″ (1.56 m) | 2¾ (70) | 2¼ (60) | 85° | 2.7 (2.1) | 4′-10″ (1.39 m) | 39 (983) | 5′-2″ (1.51 m) | 13′-3″ (3.88 m) | 39 (983) | 4′-11″ (1.50 m) | 36 | 180 (81) |
| | DS 36-1½ (DS 900-1½) | 36 (900) | 3′-9″ (1140) | 22 (560) | 4′-4″ (1320) | 3′-8¼″ (1123) | 11′-11″ (3.63 m) | 5′-6½″ (1.69 m) | 5′-1″ (1.55 m) | 3′-8″ (1.119 m) | 5′-11¼″ (1.81 m) | 5′-11¾″ (1.82 m) | 2¾ (70) | 2¼ (60) | 85° | 3.3 (2.5) | 5′-7″ (1.6 m) | 3′-11″ (1.19 m) | 6′-0″ (1.73 m) | 15′-6″ (4.52 m) | 3′-11″ (1.19 m) | 5′-7″ (1.70 m) | 42 | 240 (108) |
| 10° | DS 15-1½ (DS 375-1½) | 15 (375) | 28 (720) | 10 (260) | 29 (740) | 19¼ (490) | 7′-0½″ (2.17 m) | 3′-7½″ (1.12 m) | 36½ (940) | 19 (483) | 3′-6″ (1.08 m) | 3′-6½″ (1.09 m) | 2¾ (70) | 2¼ (60) | 80° | 1.5 (1.2) | 3′-4″ (972) | 22 (557) | 3′-10″ (1.14 m) | 9′-0″ (2.67 m) | 22 (557) | 3′-6″ (1.07 m) | 28 | 90 (41) |
| | DS 18-1½ (DS 450-1½) | 18 (450) | 28 (720) | 13 (330) | 32 (810) | 22¼ (568) | 7′-3¾″ (2.24 m) | 3′-7½″ (1.12 m) | 36½ (940) | 22 (559) | 3′-7½″ (1.11 m) | 3′-8¼″ (1.13 m) | 2¾ (70) | 2¼ (60) | 80° | 1.6 (1.2) | 3′-4″ (990) | 25 (633) | 3′-10″ (1.17 m) | 9′-3″ (2.8 m) | 25 (633) | 3′-9″ (1.14 m) | 28 | 100 (45) |
| | DS 24-1½ (DS 600-1½) | 24 (600) | 34 (870) | 16 (410) | 39 (990) | 30½ (774) | 9′-0″ (2.76 m) | 4′-5″ (1.36 m) | 3′-8½″ (1.14 m) | 30 (762) | 4′-5¾″ (1.37 m) | 4′-6¼″ (1.39 m) | 2¾ (70) | 2¼ (60) | 80° | 2.2 (1.7) | 4′-1″ (1.18 m) | 33 (841) | 4′-8″ (1.4 m) | 11′-6″ (3.42 m) | 33 (841) | 4′-5″ (1.35 m) | 34 | 150 (68) |
| | DS 30-1½ (DS 750-1½) | 30 (750) | 39 (990) | 19 (480) | 3′-9″ (1140) | 36½ (928) | 10′-4½″ (3.15 m) | 5′-0¾″ (1.54 m) | 4′-3″ (1.3 m) | 36 (914) | 5′-1¾″ (1.57 m) | 5′-2½″ (1.58 m) | 2¾ (70) | 2¼ (60) | 80° | 2.8 (2.1) | 4′-9″ (1.34 m) | 39 (993) | 5′-6″ (1.58 m) | 13′-6″ (3.92 m) | 39 (993) | 4′-11″ (1.50 m) | 36 | 180 (81) |
| | DS 36-1½ (DS 900-1½) | 36 (900) | 3′-9″ (1140) | 22 (560) | 4′-4″ (1320) | 3′-8¾″ (1136) | 12′-0½″ (3.67 m) | 5′-10″ (1.78 m) | 4′-10¾″ (1.49 m) | 3′-8″ (1.119 m) | 6′-0″ (1.83 m) | 6′-0½″ (1.84 m) | 2¾ (70) | 2¼ (60) | 80° | 3.5 (2.7) | 5′-6″ (1.54 m) | 3′-11″ (1.2 m) | 6′-4″ (1.82 m) | 15′-9″ (4.56 m) | 3′-11″ (1.2 m) | 5′-7″ (1.70 m) | 42 | 240 (108) |
| 15° | DS 15-1½ (DS 375-1½) | 15 (375) | 28 (720) | 10 (260) | 29 (740) | 19¾ (500) | 7′-2″ (2.2 m) | 3′-10″ (1.19 m) | 35¼ (910) | 19 (483) | 3′-6½″ (1.09 m) | 3′-7½″ (1.11 m) | 3 (80) | 2 (50) | 75° | 1.5 (1.2) | 3′-4″ (942) | 22 (567) | 4′-1″ (1.2 m) | 9′-3″ (2.71 m) | 22 (567) | 3′-6″ (1.07 m) | 28 | 90 (41) |
| | DS 18-1½ (DS 450-1½) | 18 (450) | 28 (720) | 13 (330) | 32 (810) | 22¾ (579) | 7′-5¼″ (2.28 m) | 3′-10″ (1.19 m) | 35¼ (910) | 22 (559) | 3′-8 ″ (1.13 m) | 3′-9¼″ (1.15 m) | 3 (80) | 2 (50) | 75° | 1.7 (1.3) | 3′-4″ (965) | 25 (644) | 4′-1″ (1.23 m) | 9′-6″ (2.84 m) | 25 (644) | 3′-9″ (1.14 m) | 28 | 100 (45) |
| | DS 24-1½ (DS 600-1½) | 24 (600) | 34 (870) | 16 (410) | 39 (990) | 31 (789) | 9′-2″ (2.8 m) | 4′-7¾″ (1.43 m) | 3′-6¾″ (1.1 m) | 30 (762) | 4′-6½″ (1.39 m) | 4′-7½″ (1.41 m) | 3 (80) | 2 (50) | 75° | 2.3 (1.8) | 4′-0″ (1.15 m) | 34 (857) | 4′-11″ (1.47 m) | 11′-9″ (3.47 m) | 34 (857) | 4′-6″ 1.37 m) | 34 | 150 (68) |
| | DS 30-1½ (DS 750-1½) | 30 (750) | 39 (990) | 19 (480) | 3′-9″ (1140) | 37¼ (946) | 10′-6½″ (3.21 m) | 5′-4″ (1.63 m) | 4′-1¼″ (1.25 m) | 36 (914) | 5′-2¾″ (1.59 m) | 5′-3¾″ (1.62 m) | 3 (80) | 2 (50) | 75° | 2.9 (2.2) | 4′-8″ (1.3 m) | 3′-4″ (1.01 m) | 5′-9″ (1.67 m) | 13′-9″ (3.98 m) | 3′-4″ (1.01 m) | 5′-0″ (1.52 m) | 40 | 200 (90) |
| | DS 36-1½ (DS 900-1½) | 36 (900) | 3′-9″ (1140) | 22 (560) | 4′-4″ (1320) | 3′-9½″ (1158) | 12′-3¼″ (3.73 m) | 6′-2″ (1.87 m) | 4′-8¾″ (1.44 m) | 3′-8″ (1.119 m) | 6′-1″ (1.85 m) | 6′-2¼″ (1.88 m) | 3 (80) | 2 (50) | 75° | 3.8 (2.9) | 5′-3″ (1.49 m) | 4′-0″ (1.22 m) | 6′-6″ (1.92 m) | 15′-9″ (4.63 m) | 4′-0″ (1.22 m) | 5′-8″ (1.73 m) | 46 | 260 (117) |
| 20° | DS 15-1½ (DS 375-1½) | 15 (375) | 28 (720) | 10 (260) | 29 (740) | 20¼ (514) | 7′-4″ (2.26 m) | 4′-0¾″ (1.26 m) | 34¼ (880) | 19 (483) | 3′-7¼″ (1.11 m) | 3′-8¾″ (1.15 m) | 3 (80) | 2 (50) | 70° | 1.6 (1.2) | 39 (916) | 23 (581) | 4′-4″ (1.27 m) | 9′-6″ (2.77 m) | 23 (581) | 3′-7″ (1.09 m) | 28 | 90 (41) |
| | DS 18-1½ (DS 450-1½) | 18 (450) | 28 (720) | 13 (330) | 32 (810) | 23½ (595) | 7′-7½″ (2.34 m) | 4′-0¾″ (1.26 m) | 34¼ (880) | 22 (559) | 3′-9″ (1.15 m) | 3′-10½″ (1.19 m) | 3 (80) | 2 (50) | 70° | 1.7 (1.3) | 39 (938) | 26 (661) | 4′-4″ (1.31 m) | 9′-9″ (2.9 m) | 26 (661) | 3′-10″ (1.17 m) | 28 | 100 (45) |
| | DS 24-1½ (DS 600-1½) | 24 (600) | 34 (870) | 16 (410) | 39 (990) | 32 (811) | 9′-4½″ (2.87 m) | 4′-11¼″ (1.52 m) | 3′-5½″ (1.07 m) | 30 (762) | 4′-7½″ (1.42 m) | 4′-9″ (1.45 m) | 3 (80) | 2 (50) | 70° | 2.4 (1.8) | 3′-11″ (1.11 m) | 35 (879) | 5′-2″ (1.56 m) | 12′-0″ (3.55 m) | 35 (879) | 4′-7″ (1.40 m) | 38 | 160 (72) |
| | DS 30-1½ (DS 750-1½) | 30 (750) | 39 (990) | 19 (480) | 3′-9″ (1140) | 28¼ (973) | 10′-9¾″ (3.29 m) | 5′-8″ (1.73 m) | 3′-11½″ (1.21 m) | 36 (914) | 5′-4¼″ (1.63 m) | 5′-5½″ (1.66 m) | 3 (80) | 2 (50) | 70° | 3.1 (2.4) | 4′-5″ (1.26 m) | 3′-5″ (1.04 m) | 5′-11″ (1.77 m) | 13′-9″ (4.07 m) | 3′-5″ (1.04 m) | 5′-1″ (1.55 m) | 42 | 210 (95) |
| | DS 36-1½ (DS 900-1½) | 36 (900) | 3′-9″ (1140) | 22 (560) | 4′-4″ (1320) | 3′-10¾″ (1191) | 12′-7″ (3.86 m) | 6′-6½″ (1.99 m) | 4′-7″ (1.41 m) | 3′-8″ (1.119 m) | 6′-2¾″ (1.9 m) | 6′-4¼″ (1.93 m) | 3 (80) | 2 (50) | 70° | 4.0 (3.1) | 5′-3″ (1.45 m) | 4′-1″ (1.26 m) | 6′-11″ (2.03 m) | 16′-3″ (4.73 m) | 4′-1″ (1.26 m) | 5′-9″ (1.75 m) | 50 | 280 (126) |
| 25° | DS 15-1½ (DS 375-1½) | 15 (375) | 28 (720) | 10 (260) | 29 (740) | 21 (533) | 7′-7″ (2.33 m) | 4′-4″ (1.34 m) | 33¼ (860) | 19 (483) | 3′-8½″ (1.14 m) | 3′-10½″ (1.19 m) | 3¼ (90) | 1¾ (50) | 65° | 1.6 (1.2) | 39 (893) | 23 (600) | 4′-7″ (1.36 m) | 9′-9″ (2.85 m) | 23 (600) | 3′-7″ (1.09 m) | 28 | 90 (41) |
| | DS 18-1½ (DS 450-1½) | 18 (450) | 28 (720) | 13 (330) | 32 (810) | 24¼ (617) | 7′-10¼″ (2.42 m) | 4′-4″ (1.34 m) | 33¼ (860) | 22 (559) | 3′-10¼″ (1.19 m) | 4′-0″ (1.23 m) | 3¼ (90) | 1¾ (50) | 65° | 1.8 (1.4) | 38 (914) | 27 (683) | 4′-7″ (1.39 m) | 10′-0″ (2.99 m) | 27 (683) | 3′-11″ (1.19 m) | 32 | 120 (54) |
| | DS 24-1½ (DS 600-1½) | 24 (600) | 34 (870) | 16 (410) | 39 (990) | 33 (841) | 9′-8½″ (2.97 m) | 5′-3¼″ (1.62 m) | 3′-4¼″ (1.04 m) | 30 (762) | 4′-9¼″ (1.46 m) | 4′-11¼″ (1.51 m) | 3¼ (90) | 1¾ (50) | 65° | 2.5 (1.9) | 3′-10″ (1.09 m) | 35 (909) | 5′-6″ (1.66 m) | 12′-3″ (3.65 m) | 35 (909) | 4′-7″ (1.40 m) | 38 | 160 (72) |
| | DS 30-1½ (DS 750-1½) | 30 (750) | 39 (990) | 19 (480) | 3′-9″ (1140) | 3′-3¾″ (1008) | 11′-2″ (3.4 m) | 6′-0½″ (1.83 m) | 3′-10¼″ (1.18 m) | 36 (914) | 5′-6″ (1.68 m) | 5′-8″ (1.72 m) | 3¼ (90) | 1¾ (50) | 65° | 3.3 (2.5) | 4′-5″ (1.23 m) | 3′-6″ (1.08 m) | 6′-4″ (1.88 m) | 14′-3″ (4.18 m) | 3′-6″ (1.08 m) | 5′-2″ (1.58 m) | 44 | 220 (99) |
| | DS 36-1½ (DS 900-1½) | 36 (900) | 3′-9″ (1140) | 22 (560) | 4′-4″ (1320) | 4′-0½″ (1235) | 13′-0¼″ (3.96 m) | 6′-11¾″ (2.12 m) | 4′-5¼″ (1.36 m) | 3′-8″ (1.119 m) | 6′-5¼″ (1.96 m) | 6′-7″ (2 m) | 3¼ (90) | 1¾ (50) | 65° | 4.3 (3.3) | 5′-0″ (1.41 m) | 4′-3″ (1.3 m) | 7′-3″ (2.16 m) | 16′-6″ (4.87 m) | 4′-3″ (1.3 m) | 5′-11″ (1.80 m) | 50 | 280 (126) |
| 30° | DS 15-1½ (DS 375-1½) | 15 (375) | 28 (720) | 10 (260) | 29 (740) | 22 (558) | 7′-10¾″ (2.43 m) | 4′-8″ (1.44 m) | 32¼ (830) | 19 (483) | 3′-10¼″ (1.19 m) | 4′-0½″ (1.24 m) | 3¼ (90) | 1½ (40) | 60° | 1.7 (1.3) | 37 (873) | 24 (626) | 4′-11″ (1.46 m) | 10′-0″ (2.95 m) | 24 (626) | 3′-8″ (1.12 m) | 36 | 110 (50) |
| | DS 18-1½ (DS 450-1½) | 18 (450) | 28 (720) | 13 (330) | 32 (810) | 25½ (645) | 8′-2¼″ (2.52 m) | 4′-8″ (1.44 m) | 32¼ (830) | 22 (559) | 4′-0″ (1.23 m) | 4′-2¼″ (1.29 m) | 3¼ (90) | 1½ (40) | 60° | 1.9 (1.5) | 38 (893) | 28 (712) | 5′-0″ (1.49 m) | 10′-6″ (3.1 m) | 28 (712) | 4′-0″ (1.22 m) | 36 | 130 (59) |
| | DS 24-1½ (DS 600-1½) | 24 (600) | 34 (870) | 16 (410) | 39 (990) | 34¾ (880) | 10′-1¼″ (3.1 m) | 5′-8″ (1.74 m) | 3′-3¼″ (1.01 m) | 30 (762) | 4′-11½″ (1.52 m) | 5′-1¾″ (1.58 m) | 3¼ (90) | 1½ (40) | 60° | 2.7 (2.1) | 3′-9″ (1.06 m) | 37 (949) | 5′-11″ (1.78 m) | 12′-9″ (3.79 m) | 37 (949) | 4′-9″ (1.45 m) | 40 | 170 (77) |
| | DS 30-1½ (DS 750-1½) | 30 (750) | 39 (990) | 19 (480) | 3′-9″ (1140) | 3′-5½″ (1055) | 11′-7¾″ (3.55 m) | 6′-6″ (1.98 m) | 3′-9″ (1.15 m) | 36 (914) | 5′-8¾″ (1.75 m) | 5′-11″ (1.8 m) | 3¼ (90) | 1½ (40) | 60° | 3.5 (2.7) | 4′-4″ (1.2 m) | 3′-8″ (1.12 m) | 6′-9″ (2.02 m) | 14′-9″ (4.34 m) | 3′-8″ (1.12 m) | 5′-4″ (1.63 m) | 46 | 230 (104) |
| | DS 36-1½ (DS 900-1½) | 36 (900) | 3′-9″ (1140) | 22 (560) | 4′-4″ (1320) | 4′-2¾″ (1292) | 13′-7″ (4.13 m) | 7′-6″ (2.28 m) | 4′-4″ (1.32 m) | 3′-8″ (1.119 m) | 6′-8½″ (2.04 m) | 6′-10½″ (2.09 m) | 3¼ (90) | 1½ (40) | 60° | 4.6 (3.5) | 5′-0″ (1.37 m) | 4′-5″ (1.36 m) | 7′-10″ (2.32 m) | 17′-3″ (5.05 m) | 4′-5″ (1.36 m) | 6′-1″ (1.86 m) | 54 | 300 (135) |

Illinois Department of Transportation

APPROVED January 1, 2009
Ralph E. Anderson
ENGINEER OF BRIDGES AND STRUCTURES

APPROVED January 1, 2009
Eric E. Harm
ENGINEER OF DESIGN AND ENVIRONMENT

ISSUED 1-1-97

**REINFORCED CONCRETE END SECTIONS FOR PIPE CULVERTS**
**15″ (375 mm) THRU 36″ (900 mm) DIA.**
**SKEWED WITH ROADWAY**

(Sheet 2 of 5)

**STANDARD 542201–02**

# WINGS FOR 1:1½ SLOPE

| Skew Angle | Design No. | Nominal Pipe Dia. | DIMENSIONS FOR CONCRETE | | | | | | | | | | | | | Concrete 2 End Sections yd³ (m³) | Reinf. Bars - 2 End Sections | | | | | | | Bars for 2 End Sections lbs. (kg) |
|---|---|---|---|---|---|---|---|---|---|---|---|---|---|---|---|---|---|---|---|---|---|---|---|---|
| | | | A | B | C | D | E | F | G | H | J | K | M | N | α | | h - bars | | | | $h_1$ - bars | | v-bars No. | |
| | | | | | | | | | | | | | | | | | o | p | q | Lgth. | p | Lgth. | | |
| 35° | DS 15-1½ (DS 375-1½) | 15 (375) | 28 (720) | 10 (260) | 29 (740) | 23¼ (590) | 8′-3¾″ (2.55 m) | 5′-0¾″ (1.56 m) | 31½ (820) | 19 (483) | 4′-0½″ (1.24 m) | 4′-3″ (1.31 m) | 3¾ (90) | 1½ (40) | 55° | 1.8 (1.4) | 37 (855) | 26 (658) | 5′-3″ (1.57 m) | 10′-6″ (3.09 m) | 26 (658) | 3′-10″ (1.17 m) | 36 | 110 (50) |
| | DS 18-1½ (DS 450-1½) | 18 (450) | 28 (720) | 13 (330) | 32 (810) | 27 (682) | 8′-7¼″ (2.65 m) | 5′-0¾″ (1.56 m) | 31½ (820) | 22 (559) | 4′-2¼″ (1.29 m) | 4′-5″ (1.36 m) | 3¾ (90) | 1½ (40) | 55° | 2.0 (1.5) | 37 (876) | 29 (750) | 5′-3″ (1.61 m) | 10′-9″ (3.24 m) | 29 (750) | 4′-1″ (1.25 m) | 36 | 130 (59) |
| | DS 24-1½ (DS 600-1½) | 24 (600) | 34 (870) | 16 (410) | 39 (990) | 36½ (930) | 10′-7¾″ (3.26 m) | 6′-1¾″ (1.88 m) | 38¼ (980) | 30 (762) | 5′-2½″ (1.6 m) | 5′-5¼″ (1.66 m) | 3¾ (90) | 1½ (40) | 55° | 2.9 (2.2) | 3′-8″ (1.04 m) | 39 (1.0 m) | 6′-4″ (1.92 m) | 13′-3″ (3.96 m) | 39 (1.0 m) | 4′-11″ (1.50 m) | 40 | 170 (77) |
| | DS 30-1½ (DS 750-1½) | 30 (750) | 39 (990) | 19 (480) | 3′-9″ (1140) | 3′-8″ (1.116 m) | 12′-3¼″ (3.74 m) | 7′-0½″ (2.15 m) | 3′-8″ (1.12 m) | 36 (914) | 6′-0¼″ (1.84 m) | 6′-3″ (1.9 m) | 3¾ (90) | 1½ (40) | 55° | 3.7 (2.8) | 4′-2″ (1.17 m) | 3′-11″ (1.18 m) | 7′-2″ (2.18 m) | 15′-3″ (4.54 m) | 3′-11″ (1.18 m) | 5′-7″ (1.70 m) | 50 | 240 (108) |
| | DS 36-1½ (DS 900-1½) | 36 (900) | 3′-9″ (1140) | 22 (560) | 4′-4″ (1320) | 4′-5¾″ (1.366 m) | 14′-3¾″ (4.35 m) | 8′-1½″ (2.47 m) | 4′-2¾″ (1.3 m) | 3′-8″ (1.119 m) | 7′-0½″ (2.14 m) | 7′-3¼″ (2.21 m) | 3¾ (90) | 1½ (40) | 55° | 4.9 (3.8) | 4′-11″ (1.34 m) | 4′-8″ (1.43 m) | 8′-5″ (2.51 m) | 18′-0″ (5.29 m) | 4′-8″ (1.43 m) | 6′-4″ (1.93 m) | 56 | 310 (140) |
| 40° | DS 15-1½ (DS 375-1½) | 15 (375) | 28 (720) | 10 (260) | 29 (740) | 24¾ (631) | 8′-10″ (2.71 m) | 5′-6¼″ (1.71 m) | 31 (780) | 19 (483) | 4′-3½″ (1.32 m) | 4′-6½″ (1.39 m) | 3¾ (100) | 1¼ (40) | 50° | 1.9 (1.5) | 37 (840) | 27 (700) | 5′-8″ (1.71 m) | 11′-0″ (3.25 m) | 27 (700) | 3′-11″ (1.19 m) | 38 | 120 (54) |
| | DS 18-1½ (DS 450-1½) | 18 (450) | 28 (720) | 13 (330) | 32 (810) | 28¾ (730) | 9′-1¾″ (2.81 m) | 5′-6¼″ (1.71 m) | 31 (780) | 22 (559) | 4′-5½″ (1.37 m) | 4′-8¼″ (1.44 m) | 3¾ (100) | 1¼ (40) | 50° | 2.2 (1.7) | 36 (860) | 31 (798) | 5′-8″ (1.76 m) | 11′-3″ (3.41 m) | 31 (798) | 4′-3″ (1.30 m) | 38 | 130 (59) |
| | DS 24-1½ (DS 600-1½) | 24 (600) | 34 (870) | 16 (410) | 39 (990) | 3′-3¼″ (995) | 11′-4″ (3.47 m) | 6′-8½″ (2.08 m) | 37½ (960) | 30 (762) | 5′-6½″ (1.7 m) | 5′-9½″ (1.77 m) | 3¾ (100) | 1¼ (40) | 50° | 3.1 (2.4) | 3′-8″ (1.02 m) | 3′-6″ (1.07 m) | 6′-10″ (2.1 m) | 14′-0″ (4.18 m) | 3′-6″ (1.07 m) | 5′-2″ (1.58 m) | 48 | 200 (90) |
| | DS 30-1½ (DS 750-1½) | 30 (750) | 39 (990) | 19 (480) | 3′-9″ (1140) | 3′-11″ (1.193 m) | 13′-0¾″ (3.98 m) | 7′-8¼″ (2.35 m) | 3′-7″ (1.1 m) | 36 (914) | 6′-5″ (1.95 m) | 6′-7¾″ (2.03 m) | 3¾ (100) | 1¼ (40) | 50° | 4.0 (3.1) | 4′-2″ (1.15 m) | 4′-2″ (1.26 m) | 7′-11″ (2.38 m) | 16′-3″ (4.79 m) | 4′-2″ (1.26 m) | 5′-10″ (1.78 m) | 54 | 260 (117) |
| | DS 36-1½ (DS 900-1½) | 36 (900) | 3′-9″ (1140) | 22 (560) | 4′-4″ (1320) | 4′-9½″ (1.461 m) | 15′-3″ (4.64 m) | 8′-10½″ (2.7 m) | 4′-1¾″ (1.26 m) | 3′-8″ (1.119 m) | 7′-6″ (2.28 m) | 7′-9″ (2.35 m) | 3¾ (100) | 1¼ (40) | 50° | 5.3 (4.1) | 4′-10″ (1.32 m) | 5′-0″ (1.53 m) | 9′-2″ (2.74 m) | 19′-0″ (5.59 m) | 5′-0″ (1.53 m) | 6′-8″ (2.03 m) | 62 | 340 (153) |
| 45° | DS 15-1½ (DS 375-1½) | 15 (375) | 28 (720) | 10 (260) | 29 (740) | 27 (683) | 9′-6″ (2.92 m) | 6′-1¼″ (1.88 m) | 30¼ (780) | 19 (483) | 4′-7½″ (1.42 m) | 4′-10½″ (1.5 m) | 4 (100) | 1¼ (30) | 45° | 2.1 (1.6) | 36 (829) | 29 (753) | 6′-1″ (1.89 m) | 11′-6″ (3.47 m) | 29 (753) | 4′-1″ (1.25 m) | 40 | 130 (59) |
| | DS 18-1½ (DS 450-1½) | 18 (450) | 28 (720) | 13 (330) | 32 (810) | 31 (791) | 9′-10¼″ (3.03 m) | 6′-1¼″ (1.88 m) | 30¼ (780) | 22 (559) | 4′-9½″ (1.47 m) | 5′-0¾″ (1.56 m) | 4 (100) | 1¼ (30) | 45° | 2.4 (1.8) | 36 (847) | 34 (859) | 6′-2″ (1.94 m) | 12′-0″ (3.64 m) | 34 (859) | 4′-6″ (1.37 m) | 44 | 150 (68) |
| | DS 24-1½ (DS 600-1½) | 24 (600) | 34 (870) | 16 (410) | 39 (990) | 3′-6½″ (1.078 m) | 12′-3½″ (3.74 m) | 7′-4¾″ (2.28 m) | 36¾ (950) | 30 (762) | 5′-11½″ (1.83 m) | 6′-3″ (1.91 m) | 4 (100) | 1¼ (30) | 45° | 3.4 (2.6) | 3′-8″ (1.0 m) | 3′-9″ (1.15 m) | 7′-7″ (2.31 m) | 15′-0″ (4.47 m) | 3′-9″ (1.15 m) | 5′-5″ (1.65 m) | 50 | 210 (95) |
| | DS 30-1½ (DS 750-1½) | 30 (750) | 39 (990) | 19 (480) | 3′-9″ (1140) | 4′-3″ (1.293 m) | 14′-1″ (4.29 m) | 8′-6″ (2.59 m) | 3′-6¼″ (1.08 m) | 36 (914) | 6′-11″ (2.1 m) | 7′-2″ (2.19 m) | 4 (100) | 1¼ (30) | 45° | 4.4 (3.4) | 4′-2″ (1.13 m) | 4′-5″ (1.36 m) | 8′-8″ (2.63 m) | 17′-3″ (5.12 m) | 4′-5″ (1.36 m) | 6′-1″ (1.86 m) | 62 | 300 (135) |
| | DS 36-1½ (DS 900-1½) | 36 (900) | 3′-9″ (1140) | 22 (560) | 4′-4″ (1320) | 5′-2¼″ (1.583 m) | 16′-5¼″ (5.01 m) | 9′-9½″ (2.98 m) | 4′-0¾″ (1.24 m) | 3′-8″ (1.119 m) | 8′-1″ (2.46 m) | 8′-4¼″ (2.55 m) | 4 (100) | 1¼ (30) | 45° | 5.7 (4.4) | 4′-10″ (1.3 m) | 5′-5″ (1.65 m) | 10′-0″ (3.02 m) | 20′-3″ (5.97 m) | 5′-5″ (1.65 m) | 7′-1″ (2.16 m) | 66 | 370 (167) |
| 50° | DS 15-1½ (DS 375-1½) | 15 (375) | 28 (720) | 10 (260) | 29 (740) | 29½ (751) | 10′-4½″ (3.18 m) | 6′-10″ (2.11 m) | 29¾ (770) | 19 (483) | 5′-0½″ (1.55 m) | 5′-4″ (1.64 m) | 4¼ (110) | 1 (30) | 40° | 2.3 (1.8) | 35 (817) | 32 (822) | 6′-11″ (2.11 m) | 12′-6″ (3.75 m) | 32 (822) | 4′-4″ (1.32 m) | 46 | 140 (63) |
| | DS 18-1½ (DS 450-1½) | 18 (450) | 28 (720) | 13 (330) | 32 (810) | 24¼ (870) | 10′-9″ (3.31 m) | 6′-10″ (2.11 m) | 29¾ (770) | 22 (559) | 5′-2¾″ (1.61 m) | 5′-6¼″ (1.7 m) | 4¼ (110) | 1 (30) | 40° | 2.6 (2.0) | 36 (836) | 37 (939) | 6′-11″ (2.16 m) | 13′-0″ (3.94 m) | 37 (939) | 4′-9″ (1.45 m) | 46 | 160 (72) |
| | DS 24-1½ (DS 600-1½) | 24 (600) | 34 (870) | 16 (410) | 39 (990) | 3′-10¾″ (1.185 m) | 13′-4¼″ (4.08 m) | 8′-3½″ (2.55 m) | 36¼ (930) | 30 (762) | 6′-6¼″ (2 m) | 6′-10″ (2.09 m) | 4¼ (110) | 1 (30) | 40° | 3.7 (2.8) | 3′-7″ (990) | 4′-1″ (1.26 m) | 8′-4″ (2.58 m) | 16′-0″ (4.83 m) | 4′-1″ (1.26 m) | 5′-9″ (1.75 m) | 56 | 230 (104) |
| | DS 30-1½ (DS 750-1½) | 30 (750) | 39 (990) | 19 (480) | 3′-9″ (1140) | 4′-8″ (1.422 m) | 15′-5″ (4.7 m) | 9′-6″ (2.9 m) | 3′-5½″ (1.06 m) | 36 (914) | 7′-6¾″ (2.3 m) | 7′-10¼″ (2.39 m) | 4¼ (110) | 1 (30) | 40° | 4.8 (3.7) | 4′-1″ (1.12 m) | 4′-10″ (1.49 m) | 9′-7″ (2.94 m) | 18′-6″ (5.54 m) | 4′-10″ (1.49 m) | 6′-6″ (1.98 m) | 66 | 320 (144) |
| | DS 36-1½ (DS 900-1½) | 36 (900) | 3′-9″ (1140) | 22 (560) | 4′-4″ (1320) | 5′-8½″ (1.741 m) | 18′-0¼″ (5.48 m) | 10′-11½″ (3.34 m) | 4′-0″ (1.22 m) | 3′-8″ (1.119 m) | 8′-10¼″ (2.7 m) | 9′-2″ (2.78 m) | 4¼ (110) | 1 (30) | 40° | 6.3 (4.8) | 4′-9″ (1.28 m) | 5′-11″ (1.81 m) | 11′-1″ (3.38 m) | 21′-9″ (6.47 m) | 5′-11″ (1.81 m) | 7′-7″ (2.31 m) | 74 | 410 (185) |
| 55° | DS 15-1½ (DS 375-1½) | 15 (375) | 28 (720) | 10 (260) | 29 (740) | 33 (842) | 11′-6¼″ (3.54 m) | 7′-9″ (2.4 m) | 29¼ (760) | 19 (483) | 5′-7¼″ (1.72 m) | 5′-11″ (1.82 m) | 4½ (110) | 1 (30) | 35° | 2.6 (2.0) | 35 (809) | 36 (914) | 7′-10″ (2.4 m) | 13′-9″ (4.12 m) | 36 (914) | 4′-8″ (1.42 m) | 50 | 150 (68) |
| | DS 18-1½ (DS 450-1½) | 18 (450) | 28 (720) | 13 (330) | 32 (810) | 38¼ (975) | 11′-11½″ (3.68 m) | 7′-9″ (2.4 m) | 29¼ (760) | 22 (559) | 5′-9¾″ (1.79 m) | 6′-1¾″ (1,89 m) | 4½ (110) | 1 (30) | 35° | 2.9 (2.2) | 36 (827) | 3′-5″ (1.05 m) | 7′-10″ (2.46 m) | 14′-3″ (4.33 m) | 3′-5″ (1.05 m) | 5′-1″ (1.55 m) | 50 | 170 (77) |
| | DS 24-1½ (DS 600-1½) | 24 (600) | 34 (870) | 16 (410) | 39 (990) | 4′-4¼″ (1.329 m) | 14′-10½″ (4.55 m) | 9′-5″ (2.9 m) | 35¾ (910) | 30 (762) | 7′-3¼″ (2.23 m) | 7′-7¼″ (2.32 m) | 4½ (110) | 1 (30) | 35° | 4.2 (3.2) | 3′-6″ (978) | 4′-7″ (1.4 m) | 9′-5″ (2.94 m) | 17′-6″ (5.32 m) | 4′-7″ (1.4 m) | 6′-3″ (1.91 m) | 62 | 260 (117) |
| | DS 30-1½ (DS 750-1½) | 30 (750) | 39 (990) | 19 (480) | 3′-9″ (1140) | 5′-2¾″ (1.594 m) | 17′-2¼″ (5.24 m) | 10′-9¾″ (3.3 m) | 3′-5″ (1.04 m) | 36 (914) | 8′-5¼″ (2.57 m) | 8′-9″ (2.67 m) | 4½ (110) | 1 (30) | 35° | 5.4 (4.1) | 4′-1″ (1.1 m) | 5′-6″ (1.66 m) | 10′-11″ (3.33 m) | 20′-6″ (6.1 m) | 5′-6″ (1.66 m) | 7′-2″ (2.19 m) | 74 | 350 (158) |
| | DS 36-1½ (DS 900-1½) | 36 (900) | 3′-9″ (1140) | 22 (560) | 4′-4″ (1320) | 6′-4¾″ (1.951 m) | 20′-1¼″ (6.12 m) | 12′-5¾″ (3.79 m) | 3′-11¼″ (1.2 m) | 3′-8″ (1.119 m) | 9′-10¾″ (3.01 m) | 10′-2½″ (3.11 m) | 4½ (110) | 1 (30) | 35° | 7.1 (5.4) | 4′-9″ (1.26 m) | 6′-7″ (2.02 m) | 12′-8″ (3.84 m) | 24′-0″ (7.12 m) | 6′-7″ (2.02 m) | 8′-3″ (2.52 m) | 86 | 212 (470) |
| 60° | DS 15-1½ (DS 375-1½) | 15 (375) | 28 (720) | 10 (260) | 29 (740) | 38 (966) | 13′-1¼″ (4.03 m) | 9′-0¼″ (2.78 m) | 29 (750) | 19 (483) | 6′-4½″ (1.96 m) | 6′-8¾″ (2.07 m) | 4½ (120) | 0¾ (20) | 30° | 2.9 (2.2) | 34 (802) | 3′-5″ (1.04 m) | 9′-0″ (2.78 m) | 15′-3″ (4.62 m) | 3′-5″ (1.04 m) | 5′-1″ (1.55 m) | 54 | 170 (77) |
| | DS 18-1½ (DS 450-1½) | 18 (450) | 28 (720) | 13 (330) | 32 (810) | 3′-8″ (1.118 m) | 13′-7¼″ (4.18 m) | 9′-0¼″ (2.78 m) | 29 (750) | 22 (559) | 6′-7½″ (2.04 m) | 6′-11¾″ (2.14 m) | 4½ (120) | 0¾ (20) | 30° | 3.2 (2.5) | 34 (820) | 3′-11″ (1.19 m) | 9′-0″ (2.85 m) | 15′-0″ (4.86 m) | 3′-11″ (1.19 m) | 5′-7″ (1.70 m) | 58 | 200 (90) |
| | DS 24-1½ (DS 600-1½) | 24 (600) | 34 (870) | 16 (410) | 39 (990) | 5′-0″ (1.524 m) | 16′-11¼″ (5.19 m) | 10′-11¼″ (3.36 m) | 35¼ (900) | 30 (762) | 8′-3½″ (2.04 m) | 8′-7¾″ (2.65 m) | 4½ (120) | 0¾ (20) | 30° | 4.7 (3.6) | 3′-6″ (969) | 5′-3″ (1.6 m) | 11′-0″ (3.41 m) | 19′-9″ (5.98 m) | 5′-3″ (1.6 m) | 6′-11″ (2.11 m) | 72 | 300 (135) |
| | DS 30-1½ (DS 750-1½) | 30 (750) | 39 (990) | 19 (480) | 3′-9″ (1140) | 6′-0″ (1.828 m) | 19′-7¼″ (5.97 m) | 12′-6¾″ (3.83 m) | 3′-4½″ (1.03 m) | 36 (914) | 9′-7½″ (2.93 m) | 9′-11¾″ (3.04 m) | 4½ (120) | 0¾ (20) | 30° | 6.1 (4.7) | 4′-1″ (1.09 m) | 6′-3″ (1.9 m) | 12′-8″ (3.87 m) | 23′-0″ (6.86 m) | 6′-3″ (1.9 m) | 7′-11″ (2.41 m) | 82 | 390 (176) |
| | DS 36-1½ (DS 900-1½) | 36 (900) | 3′-9″ (1140) | 22 (560) | 4′-4″ (1320) | 7′-4″ (2.238 m) | 22′-11¼″ (6.98 m) | 14′-5¾″ (4.41 m) | 3′-10½″ (1.18 m) | 3′-8″ (1.119 m) | 11′-3½″ (3.44 m) | 11′-7¾″ (3.54 m) | 4½ (119) | 0¾ (20) | 30° | 8.1 (6.2) | 4′-7″ (1.25 m) | 7′-7″ (2.31 m) | 14′-7″ (4.46 m) | 26′-9″ (8.02 m) | 7′-7″ (2.31 m) | 9′-3″ (2.82 m) | 98 | 530 (239) |

Illinois Department of Transportation

APPROVED January 1, 2009
Ralph E. Anderson
ENGINEER OF BRIDGES AND STRUCTURES

APPROVED January 1, 2009
ENGINEER OF DESIGN AND ENVIRONMENT

ISSUED 1-1-97

**REINFORCED CONCRETE END SECTIONS FOR PIPE CULVERTS 15″ (375 mm) THRU 36″ (900 mm) DIA. SKEWED WITH ROADWAY**

(Sheet 3 of 5)

**STANDARD 542201–02**

# WINGS FOR 1:2 SLOPE

| Skew Angle | Design No. | Nominal Pipe Dia. | DIMENSIONS FOR CONCRETE | | | | | | | | | | | | | Concrete 2 End Sections yd³ (m³) | Reinf. Bars - 2 End Sections | | | | | | | Bars for 2 End Sections lbs. (kg) |
|---|---|---|---|---|---|---|---|---|---|---|---|---|---|---|---|---|---|---|---|---|---|---|---|---|
| | | | A | B | C | D | E | F | G | H | J | K | M | N | α | | h - bars | | | | $h_1$ - bars | | v-bars No. | |
| | | | | | | | | | | | | | | | | | o | p | q | Lgth. | p | Lgth. | | |
| 5° | DS 15-2 (DS 375-2) | 15 (375) | 38 (960) | 10 (260) | 29 (740) | 19 (485) | 8′-7¾″ (2.63 m) | 4′-8¼″ (1.42 m) | 4′-3½″ (1.31 m) | 19 (483) | 4′-3¾″ (1.31 m) | 4′-4″ (1.32 m) | 2¾ (70) | 2¼ (60) | 85° | 1.9 (1.5) | 4′-7″ (1.33 m) | 21 (551) | 4′-11″ (1.45 m) | 11′-3″ (3.33 m) | 551 (551) | 3′-5″ (1.04 m) | 34 | 110 (50) |
| | DS 18-2 (DS 450-2) | 18 (450) | 38 (960) | 13 (330) | 32 (810) | 22 (561) | 8′-10¾″ (2.7 m) | 4′-8¼″ (1.42 m) | 4′-3½″ (1.31 m) | 22 (559) | 4′-5¼″ (1.35 m) | 4′-5½″ (1.35 m) | 2¾ (70) | 2¼ (60) | 85° | 2.0 (1.5) | 4′-7″ (1.36 m) | 24 (626) | 4′-11″ (1.48 m) | 11′-6″ (4.47 m) | 24 (626) | 3′-8″ (1.12 m) | 34 | 120 (54) |
| | DS 24-2 (DS 600-2) | 24 (600) | 3′-10″ (1.16 m) | 16 (410) | 39 (990) | 30 (765) | 10′-11″ (3.31 m) | 5′-8″ (1.72 m) | 5′-2½″ (1.58 m) | 30 (762) | 5′-5¼″ (1.65 m) | 5′-5¾″ (1.66 m) | 2¾ (70) | 2¼ (60) | 85° | 2.9 (2.2) | 5′-5″ (1.62 m) | 32 (832) | 5′-11″ (1.77 m) | 14′-0″ (4.22 m) | 32 (832) | 4′-4″ (1.32 m) | 42 | 180 (81) |
| | DS 30-2 (DS 750-2) | 30 (750) | 4′-4″ (1.32 m) | 19 (480) | 3′-9″ (1.14 m) | 36 (917) | 12′-5″ (3.78 m) | 6′-5″ (1.96 m) | 5′-10½″ (1.79 m) | 36 (914) | 6′-2¼″ (1.89 m) | 6′-2¾″ (1.89 m) | 2¾ (70) | 2¼ (60) | 85° | 3.7 (2.8) | 6′-3″ (1.84 m) | 39 (983) | 6′-9″ (2.0 m) | 16′-3″ (4.83 m) | 39 (983) | 4′-11″ (1.50 m) | 48 | 230 (104) |
| | DS 36-2 (DS 900-2) | 36 (900) | 5′-0″ (1.52 m) | 22 (560) | 4′-4″ (1.32 m) | 3′-8¼″ (1.123 m) | 14′-5″ (4.39 m) | 7′-4¾″ (2.25 m) | 6′-9¼″ (2.07 m) | 3′-8″ (1.119 m) | 7′-2¼″ (2.19 m) | 7′-2¾″ (2.2 m) | 2¾ (70) | 2¼ (60) | 85° | 4.5 (3.4) | 7′-2″ (2.12 m) | 3′-11″ (1.19 m) | 7′-8″ (2.3 m) | 18′-9″ (5.6 m) | 3′-11″ (1.19 m) | 5′-7″ (1.70 m) | 54 | 300 (135) |
| 10° | DS 15-2 (DS 375-2) | 15 (375) | 38 (960) | 10 (260) | 29 (740) | 19¼ (490) | 8′-9″ (2.65 m) | 4′-11″ 1.5 m) | 4′-1½″ (1.26 m) | 19 (483) | 4′-4″ (1.32 m) | 4′-5″ (1.33 m) | 2¾ (70) | 2¼ (60) | 80° | 2.0 (1.5) | 4′-4″ (1.28 m) | 22 (557) | 5′-1″ (1.52 m) | 22′-3″ (3.36 m) | 22 (557) | 3′-6″ (1.07 m) | 34 | 110 (50) |
| | DS 18-2 (DS 450-2) | 18 (450) | 38 (960) | 13 (330) | 32 (810) | 22¼ (568) | 9′-0″ (2.73 m) | 4′-11″ (1.5 m) | 4′-1½″ (1.26 m) | 22 (559) | 4′-5¾″ (1.36 m) | 4′-6¼″ (1.37 m) | 2¾ (70) | 2¼ (60) | 80° | 2.1 (1.6) | 4′-4″ (1.32 m) | 25 (633) | 5′-1″ (1.55 m) | 11′-6″ (3.5 m) | 25 (633) | 3′-9″ (1.14 m) | 34 | 120 (54) |
| | DS 24-2 (DS 600-2) | 24 (600) | 3′-10″ (1.16 m) | 16 (410) | 39 (990) | 30½ (774) | 11′-0¼″ (3.34 m) | 5′-11½″ (1.81 m) | 5′-0″ (1.52 m) | 30 (762) | 5′-5¾″ (1.66 m) | 5′-6½″ (1.68 m) | 2¾ (70) | 2¼ (60) | 80° | 3.0 (2.3) | 5′-4″ (1.57 m) | 33 (841) | 6′-2″ (1.85 m) | 14′-3″ (4.26 m) | 33 (841) | 4′-5″ (1.35 m) | 42 | 180 (81) |
| | DS 30-2 (DS 750-2) | 30 (750) | 4′-4″ (1.32 m) | 19 (480) | 3′-9″ (1.14 m) | 36½ (928) | 12′-6¾″ (3.82 m) | 6′-9″ (2.06 m) | 5′-8″ (1.73 m) | 36 (914) | 6′-3″ (1.9 m) | 6′-3¾″ (1.92 m) | 2¾ (70) | 2¼ (60) | 80° | 3.8 (2.9) | 6′-0″ (1.78 m) | 39 (993) | 7′-0″ (2.1 m) | 16′-3″ (4.87 m) | 39 (993) | 4′-11″ (1.50 m) | 48 | 230 (104) |
| | DS 36-2 (DS 900-2) | 36 (900) | 5′-0″ (1.52 m) | 22 (560) | 4′-4″ (1.32 m) | 3′-8¾″ (1.136 m) | 14′-7″ (4.44 m) | 7′-9¼″ (2.37 m) | 6′-6¼″ (1.99 m) | 3′-8″ (1.119 m) | 7′-3″ (2.21 m) | 7′-4″ (2.23 m) | 2¾ (70) | 2¼ (60) | 80° | 4.7 (3.6) | 7′-0″ (2.04 m) | 3′-11″ (1.2 m) | 8′-1″ (2.42 m) | 19′-0″ (5.66 m) | 3′-11″ (1.2 m) | 5′-7″ (1.70 m) | 54 | 300 (135) |
| 15° | DS 15-2 (DS 375-2) | 15 (375) | 38 (960) | 10 (260) | 29 (740) | 19¾ (500) | 8′-10¾″ (2.7 m) | 5′-2½″ (1.58 m) | 4′-0″ (1.21 m) | 19 (483) | 4′-4¾″ (1.34 m) | 4′-6″ (1.36 m) | 3 (80) | 2 (50) | 75° | 2.0 (1.5) | 4′-3″ (1.24 m) | 22 (567) | 5′-5″ (1.6 m) | 11′-6″ (3.41 m) | 22 (567) | 3′-6″ (1.07 m) | 34 | 110 (50) |
| | DS 18-2 (DS 450-2) | 18 (450) | 38 (960) | 13 (330) | 32 (810) | 22¾ (579) | 9′-2″ (2.78 m) | 5′-2½″ (1.58 m) | 4′-0″ (1.21 m) | 22 (559) | 4′-6½″ (1.38 m) | 4′-7½″ (1.4 m) | 3 (80) | 2 (50) | 75° | 2.2 (1.7) | 4′-3″ (1.27 m) | 25 (644) | 5′-5″ (1.64 m) | 11′-9″ (3.55 m) | 25 (644) | 3′-9″ (1.14 m) | 34 | 120 (54) |
| | DS 24-2 (DS 600-2) | 24 (600) | 3′-10″ (1.16 m) | 16 (410) | 39 (990) | 31 (789) | 11′-2¾″ (3.4 m) | 6′-3½″ (1.91 m) | 4′-10″ (1.47 m) | 30 (762) | 5′-6¾″ (1.69 m) | 5′-8″ (1.72 m) | 3 (80) | 2 (50) | 75° | 3.1 (2.4) | 5′-2″ (1.52 m) | 34 (857) | 6′-6″ (1.95 m) | 14′-6″ (4.32 m) | 34 (857) | 4′-6″ (1.37 m) | 42 | 180 (81) |
| | DS 30-2 (DS 750-2) | 30 (750) | 4′-4″ (1.32 m) | 19 (480) | 3′-9″ (1.14 m) | 37¼ (946) | 12′-9¼″ (3.89 m) | 7′-1½″ (2.17 m) | 5′-5½″ (1.67 m) | 36 (914) | 6′-4″ (1.93 m) | 6′-5¼″ (1.96 m) | 3 (80) | 2 (50) | 75° | 3.9 (3.0) | 5′-10″ (1.72 m) | 3′-4″ (1.01 m) | 7′-4″ (2.21 m) | 16′-6″ (4.94 m) | 3′-4″ (1.01 m) | 5′-0″ (1.52 m) | 52 | 250 (113) |
| | DS 36-2 (DS 900-2) | 36 (900) | 5′-0″ (1.52 m) | 22 (560) | 4′-4″ (1.32 m) | 3′-9½ (1.158) | 14′-10¼″ (4.52 m) | 8′-2½″ (2.5 m) | 6′-3½″ (1.92 m) | 3′-8″ (1.119 m) | 7′-4½″ (2.25 m) | 7′-5¾″ (2.27 m) | 3 (80) | 2 (50) | 75° | 5.0 (3.8) | 6′-9″ (1.97 m) | 4′-0″ (1.22 m) | 8′-6″ (2.55 m) | 19′-3″ (5.74 m) | 4′-0″ (1.22 m) | 5′-8″ (1.73 m) | 56 | 310 (140) |
| 20° | DS 15-2 (DS 375-2) | 15 (375) | 38 (960) | 10 (260) | 29 (740) | 20¼ (514) | 9′-1½″ (2.77 m) | 5′-6¼″ (1.68 m) | 3′-10½″ (1.18 m) | 19 (483) | 4′-6″ (1.37 m) | 4′-7½″ (1.4 m) | 3 (80) | 2 (50) | 70° | 2.1 (1.6) | 4′-2″ (1.21 m) | 23 (581) | 5′-8″ (1.69 m) | 11′-9″ (3.48 m) | 23 (581) | 3′-7″ (1.09 m) | 36 | 110 (50) |
| | DS 18-2 (DS 450-2) | 18 (450) | 38 (960) | 13 (330) | 32 (810) | 23½ (595) | 9′-4½″ (2.85 m) | 5′-6¼″ (1.68 m) | 3′-10½″ (1.18 m) | 22 (559) | 4′-7½″ (1.41 m) | 4′-9″ (1.44 m) | 3 (80) | 2 (50) | 70° | 2.3 (1.8) | 4′-2″ (1.24 m) | 26 (661) | 5′-8″ (1.73 m) | 12′-0″ (3.63 m) | 26 (661) | 3′-10″ (1.17 m) | 36 | 130 (59) |
| | DS 24-2 (DS 600-2) | 24 (600) | 3′-10″ (1.16 m) | 16 (410) | 39 (990) | 32 (811) | 11′-6¼″ (3.49 m) | 6′-8¼″ (2.03 m) | 4′-8¼″ (1.42 m) | 30 (762) | 5′-8½″ (1.73 m) | 5′-9¾″ (1.76 m) | 3 (80) | 2 (50) | 70° | 3.2 (2.4) | 5′-0″ (1.47 m) | 35 (879) | 6′-10″ (2.07 m) | 14′-9″ (4.42 m) | 35 (879) | 4′-7″ (1.40 m) | 48 | 200 (90) |
| | DS 30-2 (DS 750-2) | 30 (750) | 4′-4″ (1.32 m) | 19 (480) | 3′-9″ (1.14 m) | 38¼ (973) | 13′-1¼″ (3.99 m) | 7′-6¾″ (2.3 m) | 5′-3½″ (1.61 m) | 36 (914) | 6′-6″ (1.98 m) | 6′-7¼″ (2.01 m) | 3 (80) | 2 (50) | 70° | 4.1 (3.1) | 5′-9″ (1.67 m) | 3′-5″ (1.04 m) | 7′-10″ (2.35 m) | 17′-0″ (5.05 m) | 3′-5″ (1.04 m) | 5′-1″ (1.55 m) | 52 | 250 (113) |
| | DS 36-2 (DS 900-2) | 36 (900) | 5′-0″ (1.52 m) | 22 (560) | 4′-4″ (1.32 m) | 3′-10¾″ (1.191 m) | 15′-3″ (4.64 m) | 8′-8½″ (2.65 m) | 6′-1¼″ (1.86 m) | 3′-8″ (1.119 m) | 7′-6¾″ (2.3 m) | 7′-8¼″ (2.34 m) | 3 (80) | 2 (50) | 70° | 5.3 (4.1) | 6′-6″ (1.91 m) | 4′-1″ (1.26 m) | 8′-11″ (2.7 m) | 19′-6″ (5.87 m) | 4′-1″ (1.26 m) | 5′-9″ (1.75 m) | 58 | 320 (144) |
| 25° | DS 15-2 (DS 375-2) | 15 (375) | 38 (960) | 10 (260) | 29 (740) | 21 (533) | 9′-5″ (2.86 m) | 5′-10¾″ (1.79 m) | 3′-9″ (1.14 m) | 19 (483) | 4′-7½″ (1.41 m) | 4′-9½″ (1.45 m) | 3¼ (90) | 1¾ (50) | 65° | 2.2 (1.7) | 4′-1″ (1.12 m) | 23 (600) | 6′-0″ (1.8 m) | 12′-0″ (3.58 m) | 23 (600) | 3′-7″ (1.09 m) | 38 | 120 (54) |
| | DS 18-2 (DS 450-2) | 18 (450) | 38 (960) | 13 (330) | 32 (810) | 24¼ (617) | 9′-8½″ (2.95 m) | 5′-10¾″ (1.79 m) | 3′-9″ (1.14 m) | 22 (559) | 4′-9¼″ (1.45 m) | 4′-11¼″ (1.5 m) | 3¼ (90) | 1¾ (50) | 65° | 2.4 (1.8) | 4′-0″ (1.2 m) | 27 (683) | 6′-0″ (1.85 m) | 12′-3″ (3.73 m) | 27 (683) | 3′-11″ (1.19 m) | 42 | 140 (63) |
| | DS 24-2 (DS 600-2) | 24 (600) | 3′-10″ (1.16 m) | 16 (410) | 39 (990) | 33 (841) | 11′-11″ (3.61 m) | 7′-1½″ (2.16 m) | 4′-6½″ (1.38 m) | 30 (762) | 5′-10½″ (1.78 m) | 6′-0½″ (1.83 m) | 3¼ (90) | 1¾ (50) | 65° | 3.4 (2.6) | 4′-11″ (1.43 m) | 35 (909) | 7′-4″ (2.2 m) | 15′-3″ (4.55 m) | 35 (909) | 4′-7″ (1.40 m) | 48 | 200 (90) |
| | DS 30-2 (DS 750-2) | 30 (750) | 4′-4″ (1.32 m) | 19 (480) | 3′-9″ (1.14 m) | 3′-3¼″ (1.008 m) | 13′-6¾″ (4.13 m) | 8′-0¾″ (2.46 m) | 5′-1¾″ (1.57 m) | 36 (914) | 6′-8½″ (2.04 m) | 6′-10¼″ (2.09 m) | 3¼ (90) | 1¾ (50) | 65° | 4.3 (3.3) | 5′-6″ (1.62 m) | 3′-6″ (1.08 m) | 8′-3″ (2.5 m) | 17′-3″ (5.2 m) | 3′-6″ (1.08 m) | 5′-2″ (1.58 m) | 52 | 250 (113) |
| | DS 36-2 (DS 900-2) | 36 (900) | 5′-0″ (1.52 m) | 22 (560) | 4′-4″ (1.32 m) | 4′-0½″ (1.235 m) | 15′-9¼″ (4.8 m) | 9′-3¾″ (2.83 m) | 5′-11¼″ (1.81 m) | 3′-8″ (1.119 m) | 7′-9¾″ (2.38 m) | 7′-11½″ (2.42 m) | 3¼ (90) | 1¾ (50) | 65° | 5.6 (4.3) | 6′-5″ (1.86 m) | 4′-3″ (1.3 m) | 9′-7″ (2.88 m) | 20′-3″ (6.04 m) | 4′-3″ (1.3 m) | 5′-11″ (1.80 m) | 60 | 330 (149) |
| 30° | DS 15-2 (DS 375-2) | 15 (375) | 38 (960) | 10 (260) | 29 (740) | 22 (558) | 9′-9¾″ (2.98 m) | 6′-4″ (1.92 m) | 3′-8″ (1.11 m) | 19 (483) | 4′-9¾″ (1.46 m) | 5′-0″ (1.52 m) | 3½ (90) | 1½ (40) | 60° | 2.3 (1.8) | 4′-0″ (1.15 m) | 24 (626) | 6′-6″ (1.93 m) | 12′-6″ (3.71 m) | 24 (626) | 3′-8″ (1.12 m) | 42 | 130 (59) |
| | DS 18-2 (DS 450-2) | 18 (450) | 38 (960) | 13 (330) | 32 (810) | 25½ (645) | 10′-1½″ (3.07 m) | 6′-4″ (1.92 m) | 3′-8″ (1.11 m) | 22 (559) | 4′-11½″ (1.51 m) | 5′-2″ (1.56 m) | 3½ (90) | 1½ (40) | 60° | 2.5 (1.9) | 4′-0″ (1.18 m) | 28 (712) | 6′-5″ (1.98 m) | 3.87 m (12′-9″) | 28 (712) | 4′-0″ (1.22 m) | 42 | 150 (68) |
| | DS 24-2 (DS 600-2) | 24 (600) | 3′-10″ (1.16 m) | 16 (410) | 39 (990) | 34¾ (880) | 12′-5″ (3.77 m) | 7′-8″ (2.32 m) | 4′-5″ (1.34 m) | 30 (762) | 6′-1½″ (1.86 m) | 6′-3½″ (1.91 m) | 3½ (90) | 1½ (40) | 60° | 3.6 (2.8) | 4′-10″ (1.4 m) | 37 (949) | 7′-10″ (2.37 m) | 4.71 m (15′-9″) | 37 (949) | 4′-9″ (1.45 m) | 52 | 210 (95) |
| | DS 30-2 (DS 750-2) | 30 (750) | 4′-4″ (1.32 m) | 19 (480) | 3′-9″ (1.14 m) | 3′-5½″ (1.055 m) | 14′-1¾″ (4.31 m) | 8′-8″ (2.64 m) | 5′-0″ (1.53 m) | 36 (914) | 6′-11¾″ (2.13 m) | 7′-2″ (2.18 m) | 3½ (90) | 1½ (40) | 60° | 4.5 (3.4) | 5′-6″ (1.58 m) | 3′-8″ (1.12 m) | 8′-10″ (2.69 m) | 5.39 m (18′-0″) | 3′-8″ (1.12 m) | 5′-4″ (1.63 m) | 56 | 270 (122) |
| | DS 36-2 (DS 900-2) | 36 (900) | 5′-0″ (1.52 m) | 22 (560) | 4′-4″ (1.32 m) | 4′-2¾″ (1.292 m) | 16′-5½″ (5.01 m) | 10′-0″ (3.04 m) | 5′-9¼″ (1.76 m) | 3′-8″ (1.119 m) | 8′1¾″ (2.48 m) | 8′-3¾″ (2.53 m) | 3½ (90) | 1½ (40) | 60° | 5.9 (4.5) | 6′-4″ (1.82 m) | 4′-5″ (1.36 m) | 10′-3″ (3.09 m) | 6.26 m (21′-0″) | 4′-5″ (1.36 m) | 6′-1″ (1.86 m) | 66 | 360 (162) |

Illinois Department of Transportation

APPROVED January 1, 2009
Ralph E. Anderson
ENGINEER OF BRIDGES AND STRUCTURES

APPROVED January 1, 2009
ENGINEER OF DESIGN AND ENVIRONMENT

ISSUED 1-1-97

**REINFORCED CONCRETE END SECTIONS FOR PIPE CULVERTS 15″ (375 mm) THRU 36″ (900 mm) DIA. SKEWED WITH ROADWAY**

(Sheet 4 of 5)

**STANDARD 542201–02**

# WINGS FOR 1:2 SLOPE

| Skew Angle | Design No. | Nominal Pipe Dia. | DIMENSIONS FOR CONCRETE | | | | | | | | | | | | | Concrete 2 End Sections yd³ (m³) | Reinf. Bars - 2 End Sections | | | | | | | Bars for 2 End Sections lbs. (kg) |
|---|---|---|---|---|---|---|---|---|---|---|---|---|---|---|---|---|---|---|---|---|---|---|---|---|
| | | | A | B | C | D | E | F | G | H | J | K | M | N | α | | h - bars | | | | $h_1$ - bars | | v-bars No. | |
| | | | | | | | | | | | | | | | | | o | p | q | Lgth. | p | Lgth. | | |
| 35° | DS 15-2 (DS 375-2) | 15 (375) | 38 (960) | 10 (260) | 29 (740) | 23¼ (590) | 10'-4" (3.14 m) | 6'-10¼" (2.08 m) | 3'-6¾" (1.08 m) | 19 (485) | 5'-0¾" (1.54 m) | 5'-3¼" (1.6 m) | 3¾ (90) | 1½ (40) | 55° | 2.4 (1.8) | 3'-11" (1.13 m) | 26 (658) | 6'-11" (2.09 m) | 13'-0" (3.87 m) | 26 (658) | 3'-10" (1.17 m) | 44 | 140 (63) |
| | DS 18-2 (DS 450-2) | 18 (450) | 38 (960) | 13 (330) | 32 (810) | 27 (683) | 10'-7¾" (3.23 m) | 6'-10¼" (2.08 m) | 3'-6¾" (1.09 m) | 22 (559) | 5'-2½" (1.58 m) | 5'-5¼" (1.65 m) | 3¾ (90) | 1½ (40) | 55° | 2.6 (2.0) | 3'-11" (1.15 m) | 29 (750) | 6'-11" (2.14 m) | 13'-3" (4.04 m) | 29 (750) | 4'-1" (1.25 m) | 44 | 150 (68) |
| | DS 24-2 (DS 600-2) | 24 (600) | 3'-10" (1.16 m) | 16 (410) | 39 (990) | 36½ (930) | 13'-1" (3.97 m) | 8'-3½" (2.52 m) | 4'-3¾" (1.31 m) | 30 (762) | 6'-5¼" (1.95 m) | 6'-7¾" (2.02 m) | 3¾ (90) | 1½ (40) | 55° | 3.8 (2.9) | 4'-8" (1.37 m) | 39 (1.0 m) | 8'-4" (2.56 m) | 16'-3" (4.93 m) | 39 (1.0 m) | 4'-11" (1.50 m) | 52 | 220 (99) |
| | DS 30-2 (DS 750-2) | 30 (750) | 4'-4" (1.32 m) | 19 (480) | 3'-9" (1.14 m) | 3'-8" (1.116 m) | 14'-11" (4.54 m) | 9'-4½" (2.86 m) | 4'-10½" (1.49 m) | 36 (914) | 7'-4¼" (2.24 m) | 7'-6¾" (2.3 m) | 3¾ (90) | 1½ (40) | 55° | 4.8 (3.7) | 5'-4" (1.55 m) | 3'-11" (1.18 m) | 9'-6" (2.9 m) | 18'-9" (5.64 m) | 3'-11" (1.18 m) | 5'-7" (1.70 m) | 60 | 290 (131) |
| | DS 36-2 (DS 900-2) | 36 (900) | 5'-0" (1.52 m) | 22 (560) | 4'-4" (1.32 m) | 4'-5¾" (1.366 m) | 17'-4¼" (5.28 m) | 10'-10" (3.29 m) | 5'-7¾" (1.72 m) | 3'-8" (1.119 m) | 8'-6¾" (2.61 m) | 8'-9½" (2.67 m) | 3¾ (90) | 1½ (40) | 55° | 6.3 (4.8) | 6'-1" (1.78 m) | 4'-8" (1.43 m) | 11'-0" (3.34 m) | 21'-9" (6.55 m) | 4'-8" (1.43 m) | 6'-4" (1.93 m) | 70 | 380 (171) |
| 40° | DS 15-2 (DS 375-2) | 15 (375) | 38 (960) | 10 (260) | 29 (740) | 34¾ (631) | 11'-0" (3.34 m) | 7'-6" (2.27 m) | 3'-6" (1.06 m) | 19 (485) | 5'-4½" (1.63 m) | 5'-7½" (1.71 m) | 3¾ (100) | 1¼ (40) | 50° | 2.6 (2.0) | 3'-10" (1.1 m) | 28 (700) | 7'-7" (2.28 m) | 13'-9" (4.08 m) | 28 (700) | 3'-11" (1.19 m) | 48 | 150 (68) |
| | DS 18-2 (DS 450-2) | 18 (450) | 38 (960) | 13 (330) | 32 (810) | 28¾ (730) | 11'-4" (3.44 m) | 7'-6" (2.27 m) | 3'-6" (1.08 m) | 22 (559) | 5'-6½" (1.68 m) | 5'-9½" (1.76 m) | 3¾ (100) | 1¼ (40) | 50° | 2.8 (2.1) | 3'-10" (1.13 m) | 31 (798) | 7'-7" (2.34 m) | 14'-0" (4.26 m) | 31 (798) | 4'-3" (1.30 m) | 48 | 160 (72) |
| | DS 24-2 (DS 600-2) | 24 (600) | 3'-10" (1.16 m) | 16 (410) | 39 (990) | 3'-3¼" (995) | 13'-11¼" (4.23 m) | 9'-0¾" (2.75 m) | 4'-2¾" (1.28 m) | 30 (762) | 6'-10¼" (2.08 m) | 7'-1" (2.15 m) | 3¾ (100) | 1¼ (40) | 50° | 4.1 (3.1) | 4'-7" (1.34 m) | 3'-6" (1.07 m) | 9'-2" (2.79 m) | 17'-3" (5.2 m) | 3'-6" (1.07 m) | 5'-2" (1.58 m) | 58 | 240 (108) |
| | DS 30-2 (DS 750-2) | 30 (750) | 4'-4" (1.32 m) | 19 (480) | 3'-9" (1.14 m) | 3'-11" (1.193 m) | 15'-10¾" (4.84 m) | 10'-3" (3.12 m) | 4'-9½" (1.46 m) | 36 (914) | 7'-10" (2.38 m) | 8'-0¾" (2.46 m) | 3¾ (100) | 1¼ (40) | 50° | 5.2 (4.0) | 5'-3" (1.52 m) | 4'-2" (1.26 m) | 10'-4" (3.17 m) | 19'-9" (5.95 m) | 4'-2" (1.26 m) | 5'-10" (1.78 m) | 64 | 310 (140) |
| | DS 36-2 (DS 900-2) | 36 (900) | 5'-0" (1.52 m) | 22 (560) | 4'-4" (1.32 m) | 4'-9½" (1.461 m) | 18'-6" (5.63 m) | 11'-10" (3.6 m) | 5'-6¼" (1.68 m) | 3'-8" (1.119 m) | 9'-1½" (2.78 m) | 9'-4½" (2.85 m) | 3¾ (100) | 1¼ (40) | 50° | 6.8 (5.2) | 6'-0" (1.74 m) | 5'-0" (1.53 m) | 12'-0" (3.65 m) | 23'-0" (6.92 m) | 5'-0" (1.53 m) | 6'-3" (2.03 m) | 78 | 420 (189) |
| 45° | DS 15-2 (DS 375-2) | 15 (375) | 38 (960) | 10 (260) | 29 (740) | 27 (683) | 11'-10¼" (3.6 m) | 8'-3¼" (2.51 m) | 3'-5¼" (1.04 m) | 19 (485) | 5'-9½" (1.76 m) | 6'-0¾" (1.84 m) | 4 (100) | 1¼ (30) | 45° | 2.8 (2.1) | 3'-9" (1.09 m) | 29 (753) | 8'-4" (2.51 m) | 14'-6" (4.35 m) | 29 (753) | 4'-1" (1.25 m) | 48 | 150 (68) |
| | DS 18-2 (DS 450-2) | 18 (450) | 38 (960) | 13 (330) | 32 (810) | 31 (791) | 12'-2½" (3.7 m) | 8'-3¼" (2.51 m) | 3'-5¼" (1.04 m) | 22 (559) | 5'-11½" (1.81 m) | 6'-3" (1.89 m) | 4 (100) | 1¼ (30) | 45° | 3.1 (2.4) | 3'-10" (1.11 m) | 34 (859) | 8'-4" (2.58 m) | 15'-0" (4.55 m) | 34 (859) | 4'-6" (1.37 m) | 52 | 180 (81) |
| | DS 24-2 (DS 600-2) | 24 (600) | 3'-10" (1.16 m) | 16 (410) | 39 (990) | 3'-6½" (1.078 m) | 15'-0¼" (4.56 m) | 10'-0¼" (3.03 m) | 4'-1¾" (1.26 m) | 30 (762) | 7'-4½" (2.24 m) | 7'-7¾" (2.32 m) | 4 (100) | 1¼ (30) | 45° | 4.4 (3.4) | 4'-6" (1.32 m) | 3'-9" (1.15 m) | 10'-0" (3.08 m) | 18'-3" (5.55 m) | 3'-9" (1.15 m) | 5'-5" (1.65 m) | 60 | 250 (113) |
| | DS 30-2 (DS 750-2) | 30 (750) | 4'-4" (1.32 m) | 19 (480) | 3'-9" (1.14 m) | 4'-3" (1.293 m) | 17'-1¾" (5.23 m) | 11'-4" (3.45 m) | 4'-8¼" (1.43 m) | 36 (914) | 8'-5¼" (2.57 m) | 8'-8½" (2.66 m) | 4 (100) | 1¼ (30) | 45° | 5.6 (4.3) | 5'-2" (1.49 m) | 4'-5" (1.36 m) | 11'-5" (3.5 m) | 21'-0" (6.35 m) | 4'-5" (1.36 m) | 6'-1" (1.86 m) | 72 | 340 (153) |
| | DS 36-2 (DS 900-2) | 36 (900) | 5'-0" (1.52 m) | 22 (560) | 4'-4" (1.32 m) | 5'-2¼" (1.583 m) | 19'-11¾" (6.08 m) | 13'-0¾" (3.97 m) | 5'-5" (1.65 m) | 3'-8" (1.119 m) | 9'-10¼" (3.0 m) | 10'-1½" (3.08 m) | 4 (100) | 1¼ (30) | 45° | 7.4 (5.7) | 5'-11" (1.71 m) | 5'-5" (1.65 m) | 13'-2" (4.02 m) | 24'-6" (7.39 m) | 5'-5" (1.65 m) | 7'-1" (2.16 m) | 82 | 450 (203) |
| 50° | DS 15-2 (DS 375-2) | 15 (375) | 38 (960) | 10 (260) | 29 (740) | 29½ (751) | 12'-11½" (3.93 m) | 9'-3" (2.81 m) | 3'-4½" (1.03 m) | 19 (485) | 6'-4" (1.92 m) | 6'-7½" (2.01 m) | 4¼ (110) | 1 (30) | 40° | 3.1 (2.4) | 3'-9" (1.07 m) | 32 (822) | 9'-4" (2.81 m) | 15'-9" (4.7 m) | 32 (822) | 4'-4" (1.32 m) | 54 | 170 (77) |
| | DS 18-2 (DS 450-2) | 18 (450) | 38 (960) | 13 (330) | 32 (810) | 34¼ (870) | 13'-4¼" (4.05 m) | 9'-3" (2.81 m) | 3'-4½" (1.03 m) | 22 (559) | 6'-6¼" (1.98 m) | 6'-10" (2.07 m) | 4¼ (110) | 1 (30) | 40° | 3.4 (2.6) | 3'-8" (1.1 m) | 37 (939) | 9'-3" (2.88 m) | 16'-0" (4.92 m) | 37 (939) | 4'-9" (1.45 m) | 54 | 190 (86) |
| | DS 24-2 (DS 600-2) | 24 (600) | 3'-10" (1.16 m) | 16 (410) | 39 (990) | 3'-10¾" (1.185 m) | 16'-5½" (4.99 m) | 11'-2½" (3.39 m) | 4'-1" (1.24 m) | 30 (762) | 8'-1" (2.45 m) | 8'-4½" (2.54 m) | 4¼ (110) | 1 (30) | 40° | 4.8 (3.7) | 4'-6" (1.3 m) | 4'-1" (1.26 m) | 11'-2" (3.44 m) | 19'-9" (6.0 m) | 4'-1" (1.26 m) | 5'-9" (1.75 m) | 68 | 280 (126) |
| | DS 30-2 (DS 750-2) | 30 (750) | 4'-4" (1.32 m) | 19 (480) | 3'-9" (1.14 m) | 4'-8" (1.422 m) | 18'-9½" (5.72 m) | 12'-8" (3.86 m) | 4'-7¼" (1.41 m) | 36 (914) | 9'-3" (2.82 m) | 9'-6½" (2.92 m) | 4¼ (110) | 1 (30) | 40° | 6.2 (4.7) | 5'-1" (1.47 m) | 4'-10" (1.49 m) | 12'-9" (3.91 m) | 22'-9" (6.87 m) | 4'-10" (1.49 m) | 6'-6" (1.98 m) | 78 | 370 (167) |
| | DS 36-2 (DS 900-2) | 36 (900) | 5'-0" (1.52 m) | 22 (560) | 4'-4" (1.32 m) | 5'-8½" (1.741 m) | 21'-10¾" (6.67 m) | 14'-7½" (4.45 m) | 5'-3¾" (1.62 m) | 3'-8" (1.119 m) | 10'-9½" (3.29 m) | 11'-1¼" (3.38 m) | 4¼ (110) | 1 (30) | 40° | 8.1 (6.2) | 5'-10" (1.69 m) | 5'-11" (1.81 m) | 14'-9" (4.5 m) | 26'-6" (8.0 m) | 5'-11" (1.81 m) | 7'-7" (2.31 m) | 90 | 490 (221) |
| 55° | DS 15-2 (DS 375-2) | 15 (375) | 38 (960) | 10 (260) | 29 (740) | 33 (842) | 14'-5" (4.38 m) | 10'-6¼" (3.2 m) | 3'-4" (1.01 m) | 19 (485) | 7'-0½" (2.14 m) | 7'-4½" (2.24 m) | 4½ (110) | 1 (30) | 35° | 3.4 (2.6) | 3'-8" (1.06 m) | 36 (914) | 10'-7" (3.18 m) | 17'-3" (5.17 m) | 36 (914) | 4'-8" (1.42 m) | 60 | 180 (81) |
| | DS 18-2 (DS 450-2) | 18 (450) | 38 (960) | 13 (330) | 32 (810) | 38¼ (975) | 14'-10¼" (14'-10¼") | 10'-6¼" (3.2 m) | 3'-4" (1.01 m) | 22 (559) | 7'-3¼" (2.21 m) | 7'-7" (2.3 m) | 4½ (110) | 1 (30) | 35° | 3.7 (2.8) | 3'-9" (1.08 m) | 3'-5" (1.05 m) | 10'-7" (3.27 m) | 17'-9" (5.4 m) | 3'-5" (1.05 m) | 5'-1" (1.55 m) | 60 | 210 (95) |
| | DS 24-2 (DS 600-2) | 24 (600) | 3'-10" (1.16 m) | 16 (410) | 39 (990) | 4'-4¼" (1.329 m) | 14'-10¼" (5.56 m) | 12'-9" (3.86 m) | 4'-0¼" (1.22 m) | 30 (762) | 9'-0¼" (2.73 m) | 9'-4" (2.83 m) | 4½ (110) | 1 (30) | 35° | 5.4 (4.1) | 4'-5" (1.29 m) | 4'-7" (1.4 m) | 12'-9" (3.91 m) | 21'-9" (6.6 m) | 4'-7" (1.4 m) | 6'-3" (1.91 m) | 74 | 300 (135) |
| | DS 30-2 (DS 750-2) | 30 (750) | 4'-4" (1.32 m) | 19 (480) | 3'-9" (1.14 m) | 5'-2¾" (1.594 m) | 20'-11½" (6.39 m) | 14'-5" (4.39 m) | 4'-6½" (1.39 m) | 36 (914) | 10'-3¾" (3.15 m) | 10'-7¾" (3.24 m) | 4½ (110) | 1 (30) | 35° | 6.9 (5.3) | 5'-1" (1.45 m) | 5'-6" (1.66 m) | 14'-6" (4.44 m) | 25'-0" (7.56 m) | 5'-6" (1.66 m) | 7'-2" (2.19 m) | 88 | 420 (189) |
| | DS 36-2 (DS 900-2) | 36 (900) | 5'-0" (1.52 m) | 22 (560) | 4'-4" (1.32 m) | 6'-4¾" (1.951 m) | 24'-5¼" (7.44 m) | 16'-7½" (5.06 m) | 5'-3" (1.61 m) | 3'-8" (1.119 m) | 12'-0¾" (3.67 m) | 12'-4¾" (3.77 m) | 4½ (110) | 1 (30) | 35° | 9.1 (7.0) | 5'-10" (1.67 m) | 6'-7" (2.02 m) | 16'-7" (5.11 m) | 29'-0" (8.8 m) | 6'-7" (2.02 m) | 8'-3" (2.52 m) | 102 | 550 (248) |
| 60° | DS 15-2 (DS 375-2) | 15 (375) | 38 (960) | 10 (260) | 29 (740) | 38 (966) | 16'-5¼" (4.99 m) | 12'-2¾" (3.71 m) | 3'-3¼" (1.0 m) | 19 (485) | 8'-0½" (2.44 m) | 8'-4¾" (2.55 m) | 4½ (120) | 0¾ (20) | 30° | 3.9 (3.0) | 3'-8" (1.05 m) | 3'-5" (1.04 m) | 12'-2" (3.7 m) | 19'-3" (5.79 m) | 3'-5" (1.04 m) | 5'-1" (1.55 m) | 64 | 200 (90) |
| | DS 18-2 (DS 450-2) | 18 (450) | 38 (960) | 13 (330) | 32 (810) | 3'-8" (1.118 m) | 16'-11¼" (5.15 m) | 12'-2¾" (3.71 m) | 3'-3¼" (1.0 m) | 22 (559) | 8'-3½" (2.52 m) | 8'-7¾" (2.63 m) | 4½ (120) | 0¾ (20) | 30° | 4.2 (3.2) | 3'-8" (1.07 m) | 3'-11" (1.19 m) | 12'-2" (3.8 m) | 19'-9" (6.06 m) | 3'-11" (1.19 m) | 5'-7" (1.70 m) | 70 | 240 (108) |
| | DS 24-2 (DS 600-2) | 24 (600) | 3'-10" (1.16 m) | 16 (410) | 39 (990) | 5'-0" (1.524 m) | 20'-11¼" (6.35 m) | 14'-9¾" (4.48 m) | 3'-11¾" (1.2 m) | 30 (762) | 10'-3½" (3.12 m) | 10'-7¾" (3.23 m) | 4½ (120) | 0¾ (20) | 30° | 6.1 (4.7) | 4'-5" (1.27 m) | 5'-3" (1.6 m) | 14'-10" (4.54 m) | 24'-6" (7.41 m) | 5'-3" (1.6 m) | 6'-11" (2.11 m) | 86 | 350 (158) |
| | DS 30-2 (DS 750-2) | 30 (750) | 4'-4" (1.32 m) | 19 (480) | 3'-9" (1.14 m) | 6'-0" (1.828 m) | 23'-11¼" (7.29 m) | 16'-9" (5.1 m) | 4'-5¾" (1.37 m) | 36 (914) | 11'-9½" (3.59 m) | 12'-1¾" (3.7 m) | 4½ (120) | 0¾ (20) | 30° | 7.9 (6.0) | 5'-0" (1.44 m) | 6'-3" (1.9 m) | 16'-9" (5.16 m) | 28'-0" (8.5 m) | 6'-3" (1.9 m) | 7'-11" (2,41 m) | 100 | 470 (212) |
| | DS 36-2 (DS 900-2) | 36 (900) | 5'-0" (1.52 m) | 22 (560) | 4'-4" (1.32 m) | 7'-4" (2.238 m) | 27'-11¼" (8.51 m) | 19'-3¾" (5.88 m) | 5'-2" (1.57 m) | 3'-8" (1.119 m) | 13'-9½" (4.2 m) | 14'-1¾" (4.31 m) | 4½ (120) | 0¾ (20) | 30° | 10.4 (8.0) | 5'-10" (1.65 m) | 7'-7" (2.31 m) | 19'-4" (5.94 m) | 32'-9" (9.89 m) | 7'-7" (2.31 m) | 9'-3" (2.82 m) | 114 | 620 (279) |

Illinois Department of Transportation

APPROVED January 1, 2009
Ralph E. Anderson
ENGINEER OF BRIDGES AND STRUCTURES

APPROVED January 1, 2009
ENGINEER OF DESIGN AND ENVIRONMENT

ISSUED 1-1-97

**REINFORCED CONCRETE END SECTIONS FOR PIPE CULVERTS 15" (375 mm) THRU 36" (900 mm) DIA. SKEWED WITH ROADWAY**

(Sheet 5 of 5)

**STANDARD 542201–02**

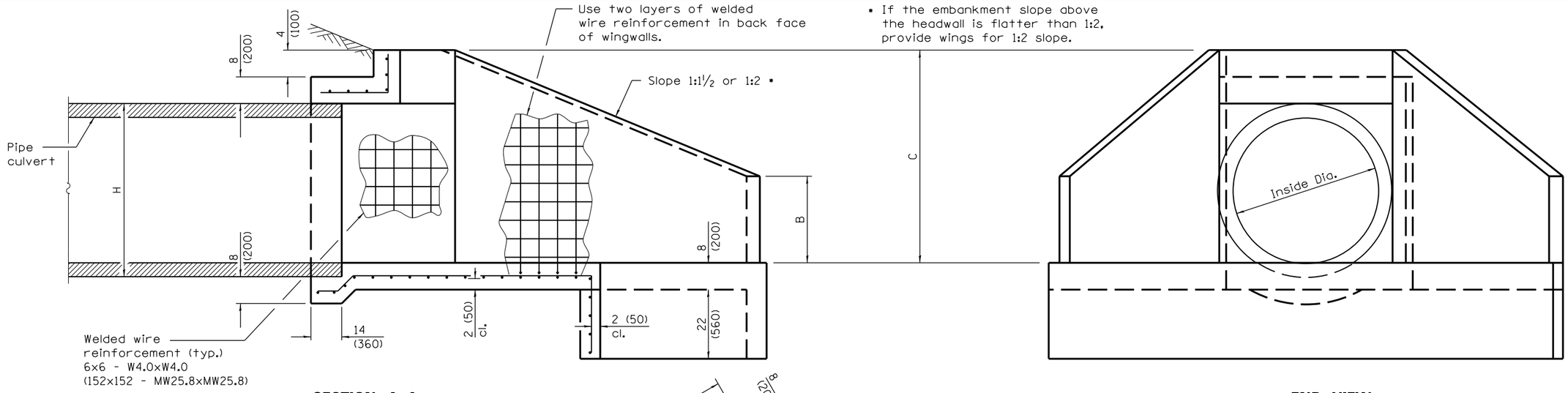


**SECTION A–A**

**END VIEW**

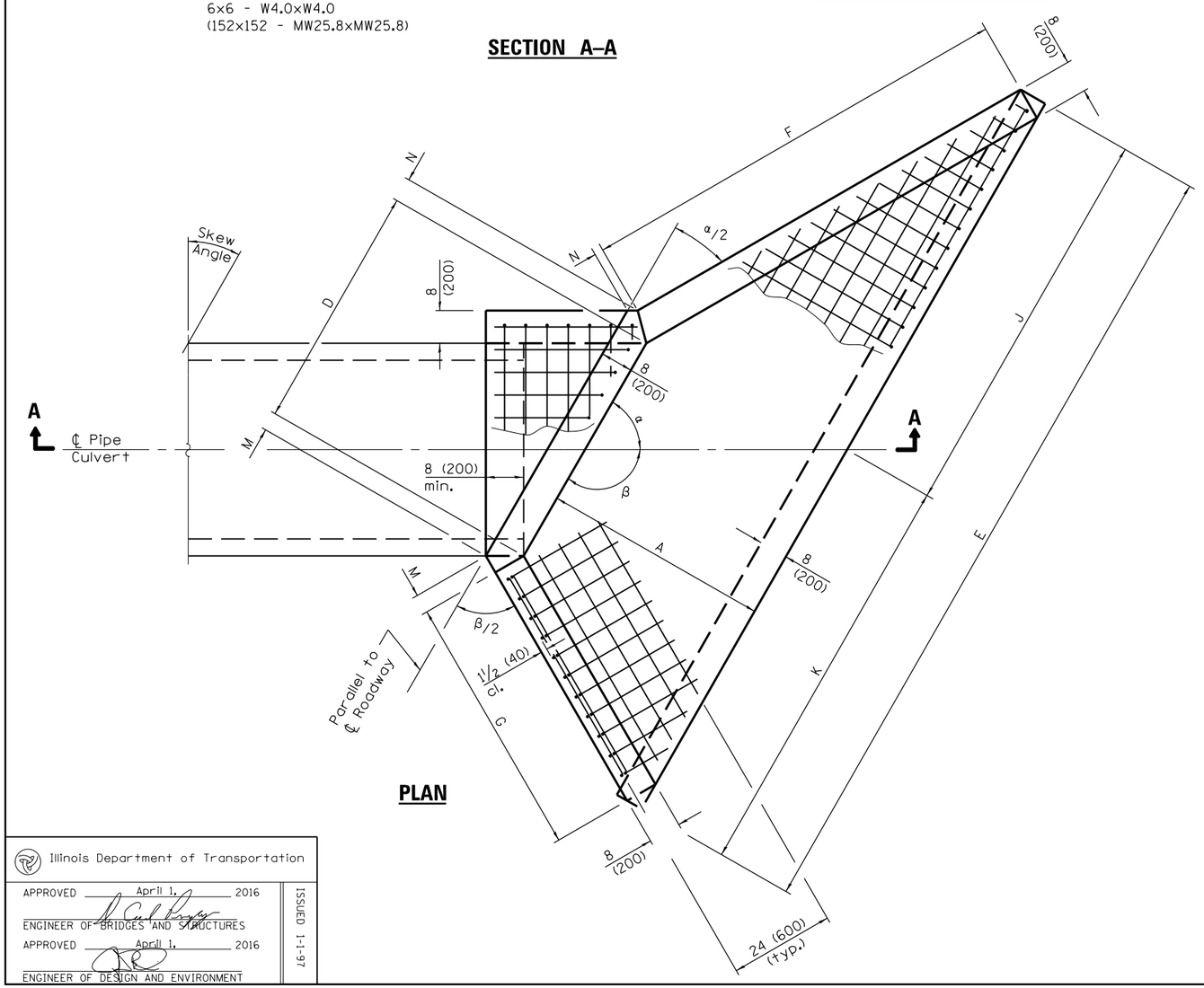


**PLAN**

## GENERAL NOTES

Build tops of headwalls parallel to grade line.

When lapping sheets of welded wire reinforcement, the overlap measured between the outermost cross wires of each reinforcement sheet shall not be less than 8 (200).

All slope ratios are expressed as units of vertical displacement to units of horizontal displacement (V:H).

All dimensions are in inches (millimeters) unless otherwise shown.

Illinois Department of Transportation

APPROVED April 1, 2016
ENGINEER OF BRIDGES AND STRUCTURES
APPROVED April 1, 2016
ENGINEER OF DESIGN AND ENVIRONMENT

ISSUED 1-1-97

| DATE | REVISIONS |
|---|---|
| 4-1-16 | Changed terminology to |
| | 'welded wire reinforcement'. |
| | |
| 1-1-14 | Corrected skew angles in |
| | table on Sheet 5. |
| | |

**REINFORCED CONCRETE END SECTIONS FOR PIPE CULVERTS 42" (1050 mm) THRU 60" (1500 mm) DIA. SKEWED WITH ROADWAY**

(Sheet 1 of 5)

**STANDARD 542206–04**

## WINGS FOR 1:1 1/2 SLOPE

| Skew Angle | Nominal Pipe Dia. | Dimensions for Concrete | | | | | | | | | | | | | Concrete 2 End Secs. cu. yd. ($m^3$) | Welded Wire Reinforcement 2 End Secs. sq. yd. ($m^2$) |
|---|---|---|---|---|---|---|---|---|---|---|---|---|---|---|---|---|
| | | A | B | C | D | E | F | G | H | J | K | M | N | α | | |
| 5° | 42 (1050) | 4′-1″ (1.25 m) | 26 (660) | 4′-10 1/2″ (1.49 m) | 4′-3 1/4″ (1.299 m) | 13′-5″ (4.09 m) | 6′-0 1/2″ (1.85 m) | 5′-6 1/2″ (1.69 m) | 4′-3″ (1.295 m) | 6′-8 1/4″ (2.04 m) | 6′-8 3/4″ (2.05 m) | 3 1/2 (90) | 3 (80) | 85° | 6.0 (4.6) | 46 (38) |
| | 48 (1200) | 4′-6″ (1.35 m) | 29 (740) | 5′-5″ (1.64 m) | 4′-10 1/4″ (1.478 m) | 14′-10″ (4.48 m) | 6′-8″ (2.0 m) | 6′-1 1/4″ (1.83 m) | 4′-10″ (1.473 m) | 7′-4 3/4″ (2.23 m) | 7′-5 1/4″ (2.25 m) | 3 1/2 (90) | 3 (80) | 85° | 7.2 (5.5) | 53 (44) |
| | 54 (1350) | 4′-11″ (1.56 m) | 32 (810) | 5′-11 1/2″ (1.85 m) | 5′-5 1/4″ (1.657 m) | 16′-3″ (5.08 m) | 7′-3 1/4″ (2.31 m) | 6′-8″ (2.12 m) | 5′-5″ (1.651 m) | 8′-1 1/4″ (2.53 m) | 8′-1 3/4″ (2.55 m) | 3 1/2 (90) | 3 (80) | 85° | 8.4 (6.4) | 65 (55) |
| | 60 (1500) | 5′-4″ (1.62 m) | 35 (890) | 6′-6″ (1.97 m) | 6′-0 1/4″ (1.835 m) | 17′-8″ (5.37 m) | 7′-10 3/4″ (2.4 m) | 7′-2 3/4″ (2.2 m) | 6′-0″ (1.829 m) | 8′-9 3/4″ (2.68 m) | 8′-10 1/4″ (2.69 m) | 3 1/2 (90) | 3 (80) | 85° | 9.8 (7.5) | 71 (59) |
| 10° | 42 (1050) | 4′-1″ (1.25 m) | 26 (660) | 4′-10 1/2″ (1.49 m) | 4′-3 3/4″ (1.314 m) | 13′-6 1/2″ (4.13 m) | 6′-4 1/4″ (1.94 m) | 5′-4″ (1.63 m) | 4′-3″ (1.295 m) | 6′-8 3/4″ (2.05 m) | 6′-9 3/4″ (2.08 m) | 3 3/4 (100) | 3 (80) | 80° | 6.3 (4.8) | 47 (39) |
| | 48 (1200) | 4′-6″ (1.35 m) | 29 (740) | 5′-5″ (1.64 m) | 4′-11″ (1.495 m) | 15′-0″ (4.52 m) | 7′-0″ (2.1 m) | 5′-10 1/2″ (1.77 m) | 4′-10″ (1.473 m) | 7′-5 1/2″ (2.25 m) | 7′-6 1/2″ (2.27 m) | 3 3/4 (100) | 3 (80) | 80° | 7.5 (5.7) | 54 (45) |
| | 54 (1350) | 4′-11″ (1.56 m) | 32 (810) | 5′-11 1/2″ (1.85 m) | 5′-6″ (1.676 m) | 16′-5″ (5.13 m) | 7′-7 3/4″ (2.43 m) | 6′-5″ (2.04 m) | 5′-5″ (1.651 m) | 8′-2″ (2.55 m) | 8′-3″ (2.58 m) | 3 3/4 (100) | 3 (80) | 80° | 8.8 (6.7) | 66 (56) |
| | 60 (1500) | 5′-4″ (1.62 m) | 35 (890) | 6′-6″ (1.97 m) | 6′-1″ (1.857 m) | 17′-10 1/2″ (5.43 m) | 8′-3 1/2″ (2.52 m) | 6′-11 1/2″ (2.12 m) | 6′-0″ (1.829 m) | 8′-10 3/4″ (2.7 m) | 8′-11 3/4″ (2.73 m) | 3 3/4 (100) | 3 (80) | 80° | 10.3 (7.9) | 73 (61) |
| 15° | 42 (1050) | 4′-1″ (1.25 m) | 26 (660) | 4′-10 1/2″ (1.49 m) | 4′-4 3/4″ (1.34 m) | 13′-9 1/2″ (4.2 m) | 6′-8 1/2″ (2.05 m) | 5′-1 3/4″ (1.57 m) | 4′-3″ (1.295 m) | 6′-10″ (2.08 m) | 6′-11 1/2″ (2.12 m) | 4 (100) | 2 3/4 (70) | 75° | 6.6 (5.0) | 48 (40) |
| | 48 (1200) | 4′-6″ (1.35 m) | 29 (740) | 5′-5″ (1.64 m) | 5′-0″ (1.524 m) | 15′-3″ (4.6 m) | 7′-4 3/4″ (2.22 m) | 5′-8″ (1.71 m) | 4′-10″ (1.473 m) | 7′-6 3/4″ (2.28 m) | 7′-8 1/4″ (2.32 m) | 4 (100) | 2 3/4 (70) | 75° | 7.9 (6.0) | 55 (46) |
| | 54 (1350) | 4′-11″ (1.56 m) | 32 (810) | 5′-11 1/2″ (1.85 m) | 5′-7 1/4″ (1.709 m) | 16′-8 3/4″ (5.22 m) | 8′-1″ (2.57 m) | 6′-2 1/4″ (1.97 m) | 5′-5″ (1.651 m) | 8′-3 3/4″ (2.59 m) | 8′-5″ (2.63 m) | 4 (100) | 2 3/4 (70) | 75° | 9.3 (7.1) | 68 (57) |
| | 60 (1500) | 5′-4″ (1.62 m) | 35 (890) | 6′-6″ (1.97 m) | 6′-2 1/2″ (1.893 m) | 18′-2 1/4″ (5.53 m) | 8′-9 1/4″ (2.66 m) | 6′-8 3/4″ (2.05 m) | 6′-0″ (1.829 m) | 9′-0 1/2″ (2.75 m) | 9′-1 3/4″ (2.78 m) | 4 (100) | 2 3/4 (70) | 75° | 10.8 (8.3) | 75 (62) |
| 20° | 42 (1050) | 4′-1″ (1.25 m) | 26 (660) | 4′-10 1/2″ (1.49 m) | 4′-6 1/4″ (1.378 m) | 14′-1 3/4″ (4.31 m) | 7′-1 1/2″ (2.17 m) | 4′-11 3/4″ (1.52 m) | 4′-3″ (1.295 m) | 7′-0″ (2.13 m) | 7′-1 3/4″ (2.18 m) | 4 1/4 (105) | 2 1/2 (70) | 70° | 7.0 (5.4) | 49 (41) |
| | 48 (1200) | 4′-6″ (1.35 m) | 29 (740) | 5′-5″ (1.64 m) | 5′-1 3/4″ (1.567 m) | 15′-7 3/4″ (4.72 m) | 7′-10 1/4″ (2.36 m) | 5′-6″ (1.65 m) | 4′-10″ (1.473 m) | 7′-9″ (2.34 m) | 7′-10 3/4″ (2.38 m) | 4 1/4 (105) | 2 1/2 (70) | 70° | 8.4 (6.4) | 57 (48) |
| | 54 (1350) | 4′-11″ (1.56 m) | 32 (810) | 5′-11 1/2″ (1.85 m) | 5′-9 1/4″ (1.756 m) | 17′-2″ (5.36 m) | 8′-6 3/4″ (2.72 m) | 6′-0″ (1.91 m) | 5′-5″ (1.651 m) | 8′-6″ (2.65 m) | 8′-8″ (2.7 m) | 4 1/4 (105) | 2 1/2 (70) | 70° | 9.9 (7.6) | 70 (59) |
| | 60 (1500) | 5′-4″ (1.62 m) | 35 (890) | 6′-6″ (1.97 m) | 6′-4 1/2″ (1.946 m) | 18-8″ (5.68 m) | 9′-3 1/2″ (2.83 m) | 6′-6 1/4″ (1.98 m) | 6′-0″ (1.829 m) | 9′-3″ (2.82 m) | 9′-5″ (2.86 m) | 4 1/4 (105) | 2 1/2 (70) | 70° | 11.5 (8.8) | 77 (64) |
| 25° | 42 (1050) | 4′-1″ (1.25 m) | 26 (660) | 4′-10 1/2″ (1.49 m) | 4′-8 1/4″ (1.428 m) | 14′-7 1/2″ (4.46 m) | 7′-7 1/4″ (2.32 m) | 4′-10″ (1.48 m) | 4′-3″ (1.295 m) | 7′-2 1/2″ (2.22 m) | 7′-5″ (2.26 m) | 4 1/2 (110) | 2 1/4 (60) | 65° | 7.4 (5.7) | 51 (43) |
| | 48 (1200) | 4′-6″ (1.35 m) | 29 (740) | 5′-5″ (1.64 m) | 5′-4″ (1.625 m) | 16′-2 1/4″ (4.88 m) | 8′-4 1/2″ (2.52 m) | 5′-4″ (1.6 m) | 4′-10″ (1.473 m) | 8′-0″ (2.41 m) | 8′-2 1/4″ (2.47 m) | 4 1/2 (110) | 2 1/4 (60) | 65° | 8.9 (6.8) | 59 (49) |
| | 54 (1350) | 4′-11″ (1.56 m) | 32 (810) | 5′-11 1/2″ (1.85 m) | 5′-11 3/4″ (1.821 m) | 17′-9″ (5.54 m) | 9′-1 3/4″ (2.91 m) | 5′-10″ (1.85 m) | 5′-5″ (1.651 m) | 8′-9 1/4″ (2.74 m) | 8′-11 3/4″ (2.8 m) | 4 1/2 (110) | 2 1/4 (60) | 65° | 10.5 (8.0) | 73 (61) |
| | 60 (1500) | 5′-4″ (1.62 m) | 35 (890) | 6′-6″ (1.97 m) | 6′-7 1/2″ (2.018 m) | 19′-3 3/4″ (5.87 m) | 9′-11″ (3.02 m) | 6′-4″ (1.92 m) | 6′-0″ (1.829 m) | 9′-6 3/4″ (2.90 m) | 9′-9″ (2.97 m) | 4 1/2 (110) | 2 1/4 (60) | 65° | 12.2 (9.3) | 80 (67) |
| 30° | 42 (1050) | 4′-1″ (1.25 m) | 26 (660) | 4′-10 1/2″ (1.49 m) | 4′-11″ (1.495 m) | 15′-3″ (4.65 m) | 8′-2″ (2.49 m) | 4′-8 1/2″ (1.44 m) | 4′-3″ (1.295 m) | 7′-6″ (2.29 m) | 7′-9″ (2.36 m) | 4 1/2 (120) | 2 1/4 (60) | 60° | 7.9 (6.0) | 53 (45) |
| | 48 (1200) | 4′-6″ (1.35 m) | 29 (740) | 5′-5″ (1.64 m) | 5′-7″ (1.7 m) | 16′-10 1/2″ (5.1 m) | 9′-0″ (2.7 m) | 5′-2 1/4″ (1.56 m) | 4′-10″ (1.473 m) | 8′-3 3/4″ (2.51 m) | 8′-6 3/4″ (2.59 m) | 4 1/2 (120) | 2 1/4 (60) | 60° | 9.5 (7.3) | 62 (52) |
| | 54 (1350) | 4′-11″ (1.56 m) | 32 (810) | 5′-11 1/2″ (1.85 m) | 6′-3″ (1.906 m) | 18′-6 1/4″ (5.79 m) | 9′-10″ (3.12 m) | 5′-8″ (1.8 m) | 5′-5″ (1.651 m) | 9′-1 3/4″ (2.85 m) | 9′-4 1/2″ (2.92 m) | 4 1/2 (120) | 2 1/4 (60) | 60° | 11.2 (8.6) | 77 (64) |
| | 60 (1500) | 5′-4″ (1.62 m) | 35 (890) | 6′-6″ (1.97 m) | 6′-11 1/4″ (2.111 m) | 20′-2″ (6.13 m) | 10′-8″ (3.24 m) | 6′-2″ (1.87 m) | 6′-0″ (1.829 m) | 9′-11 1/2″ (3.03 m) | 10′-2 1/2″ (3.1 m) | 4 1/2 (120) | 2 1/4 (60) | 60° | 13.1 (10.0) | 84 (70) |

Illinois Department of Transportation

APPROVED April 1, 2016
ENGINEER OF BRIDGES AND STRUCTURES

APPROVED April 1, 2016
ENGINEER OF DESIGN AND ENVIRONMENT

ISSUED 1-1-97

**REINFORCED CONCRETE END SECTIONS FOR PIPE CULVERTS 42″ (1050 mm) THRU 60″ (1500 mm) DIA. SKEWED WITH ROADWAY**

(Sheet 2 of 5)

**STANDARD 542206–04**

# WINGS FOR 1:1 1/2 SLOPE

| Skew Angle | Nominal Pipe Dia. | Dimensions for Concrete | | | | | | | | | | | | | Concrete 2 End Secs. cu. yd. ($m^3$) | Welded Wire Reinforcement 2 End Secs. sq. yd. ($m^2$) |
|---|---|---|---|---|---|---|---|---|---|---|---|---|---|---|---|---|
| | | A | B | C | D | E | F | G | H | J | K | M | N | α | | |
| 35° | 42 (1050) | 4′-1″ (1.25 m) | 26 (660) | 4′-10 1/2″ (1.49 m) | 5′-2 1/4″ (1.58 m) | 16′-0 3/4″ (4.59 m) | 8′-10″ (2.71 m) | 4′-7 1/4″ (1.41 m) | 4′-3″ (1.295 m) | 7′-10 3/4″ (2.4 m) | 8′-2″ (2.49 m) | 4 3/4 (120) | 2 (50) | 55° | 8.5 (6.5) | 56 (47) |
| | 48 (1200) | 4′-6″ (1.35 m) | 29 (740) | 5′-5″ (1.64 m) | 5′-10 3/4″ (1.798 m) | 17′-9 1/2″ (5.36 m) | 9′-9″ (2.93 m) | 5′-1″ (1.53 m) | 4′-10″ (1.473 m) | 8′-9″ (2.64 m) | 9′-0 1/2″ (2.73 m) | 4 3/4 (120) | 2 (50) | 55° | 10.2 (7.8) | 66 (55) |
| | 54 (1350) | 4′-11″ (1.56 m) | 32 (810) | 5′-11 1/2″ (1.85 m) | 6′-7 1/4″ (2.015 m) | 19′-6 1/4″ (6.1 m) | 10′-7 3/4″ (3.38 m) | 5′-6 1/2″ (1.76 m) | 5′-5″ (1.651 m) | 9′-7 1/2″ (3.01 m) | 9′-10 3/4″ (3.09 m) | 4 3/4 (120) | 2 (50) | 55° | 12.0 (9.2) | 81 (68) |
| | 60 (1500) | 5′-4″ (1.62 m) | 35 (890) | 6′-6″ (1.97 m) | 7′-4″ (2.232 m) | 21′-3″ (6.46 m) | 11′-6 1/2″ (3.51 m) | 6′-0 1/4″ (1.83 m) | 6′-0″ (1.829 m) | 10′-5 3/4″ (3.19 m) | 10′-9 1/4″ (3.27 m) | 4 3/4 (120) | 2 (50) | 55° | 14.1 (10.8) | 89 (74) |
| 40° | 42 (1050) | 4′-1″ (1.25 m) | 26 (660) | 4′-10 1/2″ (1.49 m) | 5′-6 1/2″ (1.69 m) | 17′-1 1/4″ (5.21 m) | 9′-8″ (2.95 m) | 4′-6″ (1.38 m) | 4′-3″ (1.295 m) | 8′-4 3/4″ (2.56 m) | 8′-8 1/2″ (2.65 m) | 5 (130) | 1 3/4 (50) | 50° | 9.1 (7.0) | 60 (50) |
| | 48 (1200) | 4′-6″ (1.35 m) | 29 (740) | 5′-5″ (1.64 m) | 6′-3 3/4″ (1.922 m) | 18′-11 1/4″ (5.72 m) | 10′-7 3/4″ (3.2 m) | 4′-11 1/2″ (1.49 m) | 4′-10″ (1.473 m) | 9′-3 3/4″ (2.81 m) | 9′-7 1/2″ (2.91 m) | 5 (130) | 1 3/4 (50) | 50° | 11.0 (8.4) | 70 (58) |
| | 54 (1350) | 4′-11″ (1.56 m) | 32 (810) | 5′-11 1/2″ (1.85 m) | 7′-0 3/4″ (2.155 m) | 20′-9 1/2″ (6.5 m) | 11′-7 1/2″ (3.69 m) | 5′-5″ (1.72 m) | 5′-5″ (1.651 m) | 10′-2 3/4″ (3.2 m) | 10′-6 3/4″ (3.3 m) | 5 (130) | 1 3/4 (50) | 50° | 13.0 (9.9) | 86 (72) |
| | 60 (1500) | 5′-4″ (1.62 m) | 35 (890) | 6′-6″ (1.97 m) | 7′-10″ (2.387 m) | 22′-7 3/4″ (6.89 m) | 12′-7 1/2″ (3.84 m) | 6′-0″ (1.79 m) | 6′-0″ (1.829 m) | 11′-2″ (3.4 m) | 11′-5 3/4″ (3.49 m) | 5 (130) | 1 3/4 (50) | 50° | 15.2 (11.6) | 95 (79) |
| 45° | 42 (1050) | 4′-1″ (1.25 m) | 26 (660) | 4′-10 1/2″ (1.49 m) | 6′-0″ (1.831 m) | 18′-5 1/4″ (5.62 m) | 10′-8″ (3.26 m) | 4′-5″ (1.35 m) | 4′-3″ (1.295 m) | 9′-0 1/2″ (2.76 m) | 9′-4 3/4″ (2.86 m) | 5 1/4 (140) | 1 1/2 (40) | 45° | 10.0 (7.6) | 65 (54) |
| | 48 (1200) | 4′-6″ (1.35 m) | 29 (740) | 5′-5″ (1.64 m) | 6′-10″ (2.083 m) | 20′-5 1/4″ (6.17 m) | 11′-9″ (3.53 m) | 4′-10 1/2″ (1.46 m) | 4′-10″ (1.473 m) | 10′-0 1/2″ (3.03 m) | 10′-4 3/4″ (3.14 m) | 5 1/4 (140) | 1 1/2 (40) | 45° | 12.0 (9.2) | 75 (63) |
| | 54 (1350) | 4′-11″ (1.56 m) | 32 (810) | 5′-11 1/2″ (1.85 m) | 7′-8″ (2.334 m) | 22′-5 1/4″ (7.01 m) | 12′-10 1/4″ (4.08 m) | 5′-3 3/4″ (1.69 m) | 5′-5″ (1.651 m) | 11′-0 1/2″ (3.45 m) | 11′-4 3/4″ (3.56 m) | 5 1/4 (140) | 1 1/2 (40) | 45° | 14.2 (10.9) | 93 (78) |
| | 60 (1500) | 5′-4″ (1.62 m) | 35 (890) | 6′-6″ (1.97 m) | 8′-5 3/4″ (2.586 m) | 24′-5 1/4″ (7.43 m) | 13′-11 1/4″ (4.24 m) | 5′-9 1/4″ (1.76 m) | 6′-0″ (1.829 m) | 12′-0 1/2″ (3.66 m) | 12′-4 3/4″ (3.77 m) | 5 1/4 (140) | 1 1/2 (40) | 45° | 16.7 (12.8) | 103 (86) |
| 50° | 42 (1050) | 4′-1″ (1.25 m) | 26 (660) | 4′-10 1/2″ (1.49 m) | 6′-7 1/4″ (2.014 m) | 20′-2″ (6.15 m) | 11′-11 1/4″ (3.64 m) | 4′-4 1/4″ (1.33 m) | 4′-3″ (1.295 m) | 9′-10 1/2″ (3.01 m) | 10′-3 1/2″ (3.14 m) | 5 1/2 (140) | 1 1/2 (40) | 40° | 11.0 (8.4) | 71 (59) |
| | 48 (1200) | 4′-6″ (1.35 m) | 29 (740) | 5′-5″ (1.64 m) | 7′-6 1/4″ (2.291 m) | 22′-4 1/2″ (6.75 m) | 13′-2″ (3.95 m) | 4′-9 1/2″ (1.44 m) | 4′-10″ (1.473 m) | 10′-11 3/4″ (3.31 m) | 11′-4 3/4″ (3.44 m) | 5 1/2 (140) | 1 1/2 (40) | 40° | 13.3 (10.2) | 82 (69) |
| | 54 (1350) | 4′-11″ (1.56 m) | 32 (810) | 5′-11 1/2″ (1.85 m) | 8′-5″ (2.568 m) | 24′-7″ (7.68 m) | 14′-4 1/2″ (4.56 m) | 5′-2 3/4″ (1.66 m) | 5′-5″ (1.651 m) | 12′-1″ (3.78 m) | 12′-6″ (3.9 m) | 5 1/2 (140) | 1 1/2 (40) | 40° | 15.8 (12.1) | 102 (85) |
| | 60 (1500) | 5′-4″ (1.62 m) | 35 (890) | 6′-6″ (1.97 m) | 9′-4″ (2.845 m) | 26′-9 1/4″ (8.15 m) | 15′-7 1/4″ (4.72 m) | 5′-8″ (1.73 m) | 6′-0″ (1.829 m) | 13′-2 1/4″ (4.02 m) | 13′-7″ (4.13 m) | 5 1/2 (140) | 1 1/2 (40) | 40° | 18.5 (14.1) | 112 (94) |
| 55° | 42 (1050) | 4′-1″ (1.25 m) | 26 (660) | 4′-10 1/2″ (1.49 m) | 7′-5″ (2.257 m) | 22′-5 3/4″ (6.85 m) | 13′-7″ (4.14 m) | 4′-3 1/2″ (1.31 m) | 4′-3″ (1.295 m) | 11′-0 1/4″ (3.36 m) | 11′-5 1/2″ (3.49 m) | 5 3/4 (150) | 1 1/4 (30) | 35° | 12.3 (9.4) | 79 (66) |
| | 48 (1200) | 4′-6″ (1.35 m) | 29 (740) | 5′-5″ (1.64 m) | 8′-5″ (2.568 m) | 24′-11 1/2″ (7.53 m) | 14′-11 1/2″ (4.49 m) | 4′-8 1/2″ (1.42 m) | 4′-10″ (1.473 m) | 12′-3″ (3.7 m) | 12′-8 1/2″ (3.83 m) | 5 3/4 (150) | 1 1/4 (30) | 35° | 14.9 (11.4) | 92 (77) |
| | 54 (1350) | 4′-11″ (1.56 m) | 32 (810) | 5′-11 1/2″ (1.85 m) | 9′-5 1/4″ (2.878 m) | 27′-5″ (8.57 m) | 16′-4 1/4″ (5.19 m) | 5′-1 3/4″ (1.64 m) | 5′-5″ (1.651 m) | 13′-6″ (4.22 m) | 13′-11″ (4.35 m) | 5 3/4 (150) | 1 1/4 (30) | 35° | 17.7 (13.5) | 113 (95) |
| | 60 (1500) | 5′-4″ (1.62 m) | 35 (890) | 6′-6″ (1.97 m) | 10′-5 1/2″ (3.188 m) | 29′-10 3/4″ (9.09 m) | 17′-8 3/4″ (5.39 m) | 5′-7″ (1.7 m) | 6′-0″ (1.829 m) | 14′-8 3/4″ (4.48 m) | 15′-2″ (4.61 m) | 5 3/4 (150) | 1 1/4 (30) | 35° | 20.8 (15.9) | 125 (104) |
| 60° | 42 (1050) | 4′-1″ (1.25 m) | 26 (660) | 4′-10 1/2″ (1.49 m) | 8′-6″ (2.59 m) | 25′-7 3/4″ (7.82 m) | 15′-9 1/4″ (4.81 m) | 4′-2 3/4″ (1.29 m) | 4′-3″ (1.295 m) | 12′-7″ (3.84 m) | 13′-0 3/4″ (3.98 m) | 6 1/4 (160) | 1 (30) | 30° | 14.1 (10.8) | 89 (75) |
| | 48 (1200) | 4′-6″ (1.35 m) | 29 (740) | 5′-5″ (1.64 m) | 9′-8″ (2.946 m) | 28′-5 3/4″ (8.59 m) | 17′-4 3/4″ (5.22 m) | 4′-8″ (1.4 m) | 4′-10″ (1.473 m) | 14′-0″ (4.22 m) | 14′-5 3/4″ (4.37 m) | 6 1/4 (160) | 1 (30) | 30° | 17.0 (13.0) | 104 (87) |
| | 54 (1350) | 4′-11″ (1.56 m) | 32 (810) | 5′-11 1/2″ (1.85 m) | 10′-10″ (3.302 m) | 31′-3 3/4″ (9.79 m) | 19′-0″ (6.03 m) | 5′-1″ (1.62 m) | 5′-5″ (1.651 m) | 15′-5″ (4.82 m) | 15′-10 3/4″ (4.97 m) | 6 1/4 (160) | 1 (30) | 30° | 20.3 (15.5) | 129 (108) |
| | 60 (1500) | 5′-4″ (1.62 m) | 35 (890) | 6′-6″ (1.97 m) | 12′-0″ (3.658 m) | 34′-1 3/4″ (10.39 m) | 20′-7 1/4″ (6.26 m) | 5′-6 1/4″ (1.68 m) | 6′-0″ (1.829 m) | 16′-10″ (5.12 m) | 17′-3 3/4″ (5.27 m) | 6 1/4 (160) | 1 (30) | 30° | 23.8 (18.2) | 142 (119) |

Illinois Department of Transportation

APPROVED April 1, 2016
ENGINEER OF BRIDGES AND STRUCTURES

APPROVED April 1, 20146
ENGINEER OF DESIGN AND ENVIRONMENT

ISSUED 1-1-97

**REINFORCED CONCRETE END SECTIONS FOR PIPE CULVERTS**
**42″ (1050 mm) THRU 60″ (1500 mm) DIA.**
**SKEWED WITH ROADWAY**

(Sheet 3 of 5)

**STANDARD 542206–04**

# WINGS FOR 1:2 SLOPE

| Skew Angle | Nominal Pipe Dia. | Dimensions for Concrete | | | | | | | | | | | | | Concrete 2 End Secs. cu. yd. ($m^3$) | Welded Wire Reinforcement 2 End Secs. sq. yd. ($m^2$) |
|---|---|---|---|---|---|---|---|---|---|---|---|---|---|---|---|---|
| | | A | B | C | D | E | F | G | H | J | K | M | N | α | | |
| 5° | 42 (1050) | 5′-5″ (1.66 m) | 26 (660) | 4′-10½″ (1.49 m) | 4′-3¼″ (1.299 m) | 16′-1″ (4.29 m) | 8′-0¼″ (2.46 m) | 7′-4¼″ (2.26 m) | 4′-3″ (1.295 m) | 8′-0¼″ (2.45 m) | 8′-0¾″ (2.47 m) | 3½ (90) | 3 (80) | 85° | 8.0 (6.1) | 61 (51) |
| | 48 (1200) | 6′-0″ (1.8 m) | 29 (740) | 5′-5″ (1.64 m) | 4′-10¼″ (1.478 m) | 17′-10″ (5.38 m) | 8′-10½″ (2.67 m) | 8′-1¾″ (2.44 m) | 1.473 m (4′-10″) | 8′-10¾″ (2.68 m) | 8′-11¼″ (2.7 m) | 3½ (90) | 3 (80) | 85° | 9.6 (7.3) | 71 (59) |
| | 54 (1350) | 6′-7″ (2.08 m) | 32 (810) | 5′-11½″ (1.85 m) | 5′-5¼″ (1.657 m) | 19′-7″ (6.12 m) | 9′-9″ (3.08 m) | 8′-11¼″ (2.82 m) | 1.651 m (5′-5″) | 9′-9¼″ (3.05 m) | 9′-9¾″ (3.07 m) | 3½ (90) | 3 (80) | 85° | 11.3 (8.6) | 88 (74) |
| | 60 (1500) | 7′-2″ (2.16 m) | 35 (890) | 6′-6″ (1.97 m) | 6′-0¼″ (1.835 m) | 21′-4¼″ (6.46 m) | 10′-7¼″ (3.2 m) | 9′-8¾″ (2.93 m) | 1.829 m (6′-0″) | 10′-8″ (3.22 m) | 10′-8¼″ (3.24 m) | 3½ (90) | 3 (80) | 85° | 13.2 (10.1) | 96 (80) |
| 10° | 42 (1050) | 5′-5″ (1.66 m) | 26 (660) | 4′-10½″ (1.49 m) | 4′-3¾″ (1.314 m) | 16′-3″ (4.97 m) | 8′-5″ (2.59 m) | 7′-0¾″ (2.17 m) | 1.295 m (4′-3″) | 8′-1″ (2.47 m) | 8′-2″ (2.5 m) | 3¾ (100) | 3 (80) | 80° | 8.3 (6.3) | 62 (52 |
| | 48 (1200) | 6′-0″ (1.8 m) | 29 (740) | 5′-5″ (1.64 m) | 4′-11″ (1.495 m) | 18′-0½″ (5.43 m) | 9′-4″ (2.8 m) | 7′-10″ (2.35 m) | 1.473 m (4′-10″) | 8′-11¾″ (2.71 m) | 9′-0¾″ (2.73 m) | 3¾ (100) | 3 (80) | 80° | 9.9 (7.6) | 72 (60) |
| | 54 (1350) | 6′-7″ (2.08 m) | 32 (810) | 5′-11½″ (1.85 m) | 5′-6″ (1.676 m) | 19′-9¾″ (6.19 m) | 10′-3″ (3.24 m) | 8′-7¼″ (2.72 m) | 1.651 m (5′-5″) | 9′-10½″ (3.08 m) | 9′-11¼″ (3.11 m) | 3¾ (100) | 3 (80) | 80° | 11.7 (8.9) | 90 (75) |
| | 60 (1500) | 7′-2″ (2.16 m) | 35 (890) | 6′-6″ (1.97 m) | 6′-1″ (1.857 m) | 21′-7″ (6.53 m) | 11′-1¾″ (3.36 m) | 9′-4¼″ (2.82 m) | 1.829 m (6′-0″) | 10′-9″ (3.25 m) | 10′-10″ (3.28 m) | 3¾ (100) | 3 (80) | 80° | 13.7 (10.5) | 98 (82) |
| 15° | 42 (1050) | 5′-5″ (1.66 m) | 26 (660) | 4′-10½″ (1.49 m) | 4′-4¾″ (1.34 m) | 16′-6½″ (5.06 m) | 8′-10¾″ (2.73 m) | 6′-10″ (2.1 m) | 1.295 m (4′-3″) | 8′-2½″ (2.51 m) | 8′-4″ (2.55 m) | 4 (100) | 2¾ (70) | 75° | 8.6 (6.6) | 64 (53) |
| | 48 (1200) | 6′-0″ (1.8 m) | 29 (740) | 5′-5″ (1.64 m) | 5′-0″ (1.524 m) | 18′-4½″ (5.54 m) | 9′-10¼″ (2.96 m) | 7′-6¾″ (2.27 m) | 1.473 m (4′-10″) | 9′-1½″ (2.75 m) | 9′-3″ (2.79 m) | 4 (100) | 2¾ (70) | 75° | 10.4 (8.0) | 74 (62) |
| | 54 (1350) | 6′-7″ (2.08 m) | 32 (810) | 5′-11½″ (1.85 m) | 5′-7¼″ (1.709 m) | 20′-2″ (6.3 m) | 10′-9¾″ (3.42 m) | 8′-3½″ (2.63 m) | 1.651 m (5′-5″) | 10′-0¼″ (3.13 m) | 10′-1¾″ (3.17 m) | 4 (100) | 2¾ (70) | 75° | 12.3 (9.4) | 92 (77) |
| | 60 (1500) | 7′-2″ (2.16 m) | 35 (890) | 6′-6″ (1.97 m) | 6′-2½″ (1.893 m) | 21′-11¾″ (6.65 m) | 11′-9¼″ (3.55 m) | 9′-0½″ (2.73 m) | 1.829 m (6′-0″) | 10′-11¼″ (3.31 m) | 11′-0½″ (3.34 m) | 4 (100) | 2¾ (70) | 75° | 14.3 (10.9) | 100 (84) |
| 20° | 42 (1050) | 5′-5″ (1.66 m) | 26 (660) | 4′-10½″ (1.49 m) | 4′-6¼″ (1.378 m) | 16′-11¾″ (5.19 m) | 9′-5¼″ (2.9 m) | 6′-7¼″ (2.03 m) | 1.295 m (4′-3″) | 8′-5″ (2.57 m) | 8′-6¾″ (2.62 m) | 4¼ (110) | 2½ (70) | 70° | 9.0 (6.9) | 66 (55) |
| | 48 (1200) | 6′-0″ (1.8 m) | 29 (740) | 5′-5″ (1.64 m) | 5′-1¾″ (1.567 m) | 18′-10″ (5.68 m) | 10′-5½″ (3.14 m) | 7′-4″ (2.2 m) | 1.473 m (4′-10″) | 9′-4″ (2.81 m) | 9′-6″ (2.86 m) | 4¼ (110) | 2½ (70) | 70° | 10.9 (8.3) | 76 (64) |
| | 54 (1350) | 6′-7″ (2.08 m) | 32 (810) | 5′-11½″ (1.85 m) | 5′-9¼″ (1.756 m) | 20′-8½″ (6.47 m) | 11′-5¾″ (3.63 m) | 8′-0½″ (2.54 m) | 1.651 m (5′-5″) | 10′-3¼″ (3.21 m) | 10′-5¼″ (3.26 m) | 4¼ (110) | 2½ (70) | 70° | 12.9 (9.9) | 94 (79) |
| | 60 (1500) | 7′-2″ (2.16 m) | 35 (890) | 6′-6″ (1.97 m) | 6′-4½″ (1.946 m) | 22′-6¾″ (6.83 m) | 12′-6″ (3.77 m) | 8′-9″ (2.64 m) | 1.829 m (6′-0″) | 11′-2½″ (3.39 m) | 11′-4¼″ (3.44 m) | 4¼ (110) | 2½ (70) | 70° | 15.1 (11.5) | 103 (86) |
| 25° | 42 (1050) | 5′-5″ (1.66 m) | 26 (660) | 4′-10½″ (1.49 m) | 4′-8¼″ (1.428 m) | 17′-6¾″ (5.37 m) | 10′-1″ (3.09 m) | 6′-5″ (1.64 m) | 1.295 m (4′-3″) | 8′-8¼″ (2.65 m) | 8′-10½″ (2.72 m) | 4½ (110) | 2¼ (60) | 65° | 9.5 (7.3) | 65 (55) |
| | 48 (1200) | 6′-0″ (1.8 m) | 29 (740) | 5′-5″ (1.64 m) | 5′-4″ (1.625 m) | 19′-6″ (5.88 m) | 11′-2′ (3.35 m) | 7′-1¼″ (2.14 m) | 1.473 m (4′-10″) | 9′-7¾″ (2.91 m) | 9′-10¼″ (2.97 m) | 4½ (110) | 2¼ (60) | 65° | 11.5 (8.8) | 79 (66) |
| | 54 (1350) | 6′-7″ (2.08 m) | 32 (810) | 5′-11½″ (1.85 m) | 5′-11¾″ (1.821 m) | 21′-5″ (6.69 m) | 12′-3″ (3.87 m) | 7′-9¾″ (2.47 m) | 1.651 m (5′-5″) | 10′-7¼″ (3.31 m) | 10′-9¾″ (3.37 m) | 4½ (110) | 2¼ (60) | 65° | 13.6 (10.4) | 98 (82) |
| | 60 (1500) | 7′-2″ (2.16 m) | 35 (890) | 6′-6″ (1.97 m) | 6′-7½″ (2.018 m) | 23′-4¼″ (7.06 m) | 13′-4″ (4.02 m) | 8′-6″ (2.56 m) | 1.829 m (6′-0″) | 11′-7″ (3.5 m) | 11′-9¼″ (3.56 m) | 4½ (110) | 2¼ (60) | 65° | 15.9 (12.2) | 107 (90) |
| 30° | 42 (1050) | 5′-5″ (1.66 m) | 26 (660) | 4′-10½″ (1.49 m) | 4′-11″ (1.495 m) | 18′-4″ (5.61 m) | 10′-10″ (3.32 m) | 6′-3″ (1.92 m) | 1.295 m (4′-3″) | 9′-0½″ (2.77 m) | 9′-3½″ (2.84 m) | 4½ (120) | 2¼ (60) | 60° | 10.1 (7.7) | 71 (59) |
| | 48 (1200) | 6′-0″ (1.8 m) | 29 (740) | 5′-5″ (1.64 m) | 5′-7″ (1.7 m) | 20′-4¼″ (6.13 m) | 12′-0″ (3.6 m) | 6′-11¼″ (2.08 m) | 1.473 m (4′-10″) | 10′-0¾″ (3.03 m) | 10′-3½″ (3.1 m) | 4½ (120) | 2¼ (60) | 60° | 12.2 (9.3) | 82 (69) |
| | 54 (1350) | 6′-7″ (2.08 m) | 32 (810) | 5′-11½″ (1.85 m) | 6′-3″ (1.906 m) | 22′-4½″ (6.99 m) | 13′-2″ (4.16 m) | 7′-7¼″ (2.41 m) | 1.651 m (5′-5″) | 11′-0¾″ (3.46 m) | 11′-3¾″ (3.53 m) | 4½ (120) | 2¼ (60) | 60° | 14.4 (11.0) | 102 (86) |
| | 60 (1500) | 7′-2″ (2.16 m) | 35 (890) | 6′-6″ (1.97 m) | 6′-11¼″ (2.111 m) | 24′-4¾″ (7.38 m) | 14′-4″ (4.32 m) | 8′-3¼″ (2.45 m) | 1.829 m (6′-0″) | 12′-1″ (3.65 m) | 12′-3¾″ (3.73 m) | 4½ (120) | 2¼ (60) | 60° | 16.9 (12.9) | 112 (93) |

Illinois Department of Transportation

APPROVED April 1, 2016
ENGINEER OF BRIDGES AND STRUCTURES

APPROVED April 1, 2016
ENGINEER OF DESIGN AND ENVIRONMENT

ISSUED 1-1-97

**REINFORCED CONCRETE END SECTIONS FOR PIPE CULVERTS 42″ (1050 mm) THRU 60″ (1500 mm) DIA. SKEWED WITH ROADWAY**

(Sheet 4 of 5)

**STANDARD 542206–04**

## WINGS FOR 1:1 1/2 SLOPE

| Skew Angle | Nominal Pipe Dia. | Dimensions for Concrete | | | | | | | | | | | | | Concrete 2 End Secs. cu. yd. ($m^3$) | Welded Wire Reinforcement 2 End Secs. sq. yd. ($m^2$) |
|---|---|---|---|---|---|---|---|---|---|---|---|---|---|---|---|---|
| | | A | B | C | D | E | F | G | H | J | K | M | N | α | | |
| 35° | 42 (1050) | 5′-5″ (1.66 m) | 26 (660) | 4′-10 1/2″ (1.49 m) | 5′-2 1/4″ (1.58 m) | 19′-3 3/4″ (5.91 m) | 11′-8 3/4″ (3.6 m) | 6′-1 1/4″ (1.87 m) | 4′-3″ (1.295 m) | 9′-6 1/4″ (2.91 m) | 9′-9 1/2″ (3.0 m) | 4 3/4 (120) | 2 (50) | 55° | 10.8 (8.3) | 75 (63) |
| | 48 (1200) | 6′-0″ (1.80 m) | 29 (740) | 5′-5″ (1.64 m) | 5′-10 3/4″ (1.798 m) | 21′-5 1/2″ (6.47 m) | 13′-0″ (3.9 m) | 6′-9 1/4″ (2.03 m) | 4′-10″ (1.473 m) | 10′-7″ (3.91 m) | 10′-10 1/2″ (3.28 m) | 4 3/4 (120) | 2 (50) | 55° | 13.0 (9.9) | 87 (73) |
| | 54 (1350) | 6′-7″ (2.08 m) | 32 (810) | 5′-11 1/2″ (1.85 m) | 6′-7 1/4″ (2.015 m) | 23′-7″ (7.37 m) | 14′-3″ (4.51 m) | 7′-5″ (2.35 m) | 5′-5″ (1.651 m) | 11′-7 3/4″ (3.64 m) | 11′-11 1/4″ (3.73 m) | 4 3/4 (120) | 2 (50) | 55° | 15.4 (11.8) | 108 (90) |
| | 60 (1500) | 7′-2″ (2.16 m) | 35 (890) | 6′-6″ (1.97 m) | 7′-4″ (2.232 m) | 25′-8 3/4″ (7.78 m) | 15′-6 1/4″ (4.68 m) | 8′-1″ (2.44 m) | 6′-0″ (1.829 m) | 12′-8 3/4″ (3.85 m) | 13′-0″ (3.93 m) | 4 3/4 (120) | 2 (50) | 55° | 18.1 (13.8) | 118 (99) |
| 40° | 42 (1050) | 5′-5″ (1.66 m) | 26 (660) | 4′-10 1/2″ (1.49 m) | 5′-6 1/2″ (1.69 m) | 20′-7″ (6.29 m) | 12′-9 3/4″ (3.93 m) | 5′-11 3/4″ (1.84 m) | 4′-3″ (1.295 m) | 10′-1 1/2″ (3.1 m) | 10′-5 1/2″ (3.19 m) | 5 (130) | 1 3/4 (50) | 50° | 11.6 (8.9) | 80 (67) |
| | 48 (1200) | 6′-0″ (1.80 m) | 29 (740) | 5′-5″ (1.64 m) | 6′-3 3/4″ (1.922 m) | 22′-10 1/4″ (6.89 m) | 14′-2 1/4″ (4.26 m) | 6′-7 1/2″ (1.99 m) | 4′-10″ (1.473 m) | 11′-3 1/4″ (3.4 m) | 11′-7″ (3.49 m) | 5 (130) | 1 3/4 (50) | 50° | 14.0 (10.7) | 93 (77) |
| | 54 (1350) | 6′-7″ (2.08 m) | 32 (810) | 5′-11 1/2″ (1.85 m) | 7′-0 3/4″ (2.155 m) | 25′-1 3/4″ (7.86 m) | 15′-7″ (4.93 m) | 7′-3 1/4″ (2.3 m) | 5′-5″ (1.651 m) | 12′-5″ (3.88 m) | 12′-8 3/4″ (3.98 m) | 5 (130) | 1 3/4 (50) | 50° | 16.7 (12.8) | 115 (96) |
| | 60 (1500) | 7′-2″ (2.16 m) | 35 (890) | 6′-6″ (1.97 m) | 7′-10″ (2.387 m) | 27′-5 1/4″ (8.3 m) | 16′-11 1/2″ (5.11 m) | 7′-11″ (2.39 m) | 6′-0″ (1.829 m) | 13′-6 3/4″ (4.1 m) | 13′-10 1/2″ (4.2 m) | 5 (130) | 1 3/4 (50) | 50° | 19.5 (14.9) | 126 (105) |
| 45° | 42 (1050) | 5′-5″ (1.66 m) | 26 (660) | 4′-10 1/2″ (1.49 m) | 6′-0″ (1.831 m) | 22′-2 1/2″ (6.79 m) | 14′-1 3/4″ (4.34 m) | 5′-10 1/4″ (1.8 m) | 4′-3″ (1.295 m) | 10′-11″ (3.34 m) | 11′-3 1/2″ (3.45 m) | 5 1/4 (140) | 1 1/2 (40) | 45° | 12.6 (9.6) | 86 (72) |
| | 48 (1200) | 6′-0″ (1.80 m) | 29 (740) | 5′-5″ (1.64 m) | 6′-10″ (2.083 m) | 24′-8 1/4″ (7.44 m) | 15′-8 1/4″ (4.7 m) | 6′-6″ (1.95 m) | 4′-10″ (1.473 m) | 12′-2″ (3.67 m) | 12′-6 1/4″ (3.77 m) | 5 1/4 (140) | 1 1/2 (40) | 45° | 15.2 (12.0) | 100 (83) |
| | 54 (1350) | 6′-7″ (2.08 m) | 32 (810) | 5′-11 1/2″ (1.85 m) | 7′-8″ (2.334 m) | 27′-1 3/4″ (8.48 m) | 17′-2 1/2″ (5.44 m) | 7′-1 1/2″ (2.25 m) | 5′-5″ (1.651 m) | 13′-4 3/4″ (4.19 m) | 13′-9″ (4.29 m) | 5 1/4 (140) | 1 1/2 (40) | 45° | 18.2 (13.9) | 124 (104) |
| | 60 (1500) | 7′-2″ (2.16 m) | 35 (890) | 6′-6″ (1.97 m) | 8′-5 3/4″ (2.586 m) | 29′-7 1/2″ (8.96 m) | 18′-8 3/4″ (5.65 m) | 7′-9″ (2.34 m) | 6′-0″ (1.829 m) | 14′-7 1/2″ (4.43 m) | 15′-0″ (4.53 m) | 5 1/4 (140) | 1 1/2 (40) | 45° | 21.3 (16.3) | 136 (114) |
| 50° | 42 (1050) | 5′-5″ (1.66 m) | 26 (660) | 4′-10 1/2″ (1.49 m) | 6′-7 1/4″ (2.014 m) | 24′-3 3/4″ (7.44 m) | 15′-10″ (4.86 m) | 5′-9 1/4″ (1.77 m) | 4′-3″ (1.295 m) | 11′-11 1/2″ (3.66 m) | 12′-4 1/4″ (3.78 m) | 5 1/2 (150) | 1 1/2 (40) | 40° | 13.9 (10.6) | 94 (78) |
| | 48 (1200) | 6′-0″ (1.80 m) | 29 (740) | 5′-5″ (1.64 m) | 7′-6 1/4″ (2.291 m) | 27′-0 1/2″ (8.15 m) | 17′-6 1/2″ (5.27 m) | 6′-4 1/2″ (1.92 m) | 4′-10″ (1.473 m) | 13′-3 3/4″ (4.02 m) | 13′-8 3/4″ (4.13 m) | 5 1/2 (150) | 1 1/2 (40) | 40° | 16.8 (12.8) | 109 (91) |
| | 54 (1350) | 6′-7″ (2.08 m) | 32 (810) | 5′-11 1/2″ (1.85 m) | 8′-5″ (2.568 m) | 29′-9 1/4″ (9.3 m) | 19′-3″ (6.09 m) | 7′-0″ (2.21 m) | 5′-5″ (1.651 m) | 14′-8 1/4″ (4.59 m) | 15′-1″ (4.71 m) | 5 1/2 (150) | 1 1/2 (40) | 40° | 20.0 (15.3) | 135 (113) |
| | 60 (1500) | 7′-2″ (2.16 m) | 35 (890) | 6′-6″ (1.97 m) | 9′-4″ (2.845 m) | 32′-5 3/4″ (9.82 m) | 20′-11 1/2″ (6.32 m) | 7′-7 1/2″ (2.3 m) | 6′-0″ (1.829 m) | 16′-0 1/2″ (4.86 m) | 16′-5 1/4″ (4.97 m) | 5 1/2 (150) | 1 1/2 (40) | 40° | 23.5 (18.0) | 148 (124) |
| 55° | 42 (1050) | 5′-5″ (1.66 m) | 26 (660) | 4′-10 1/2″ (1.49 m) | 7′-5″ (2.257 m) | 27′-1 1/2″ (8.3 m) | 18′-0 1/4″ (5.52 m) | 5′-8 1/4″ (1.74 m) | 4′-3″ (1.295 m) | 13′-4 1/4″ (4.08 m) | 13′-9 1/4″ (4.22 m) | 5 3/4 (150) | 1 1/4 (30) | 35° | 15.5 (11.9) | 104 (87) |
| | 48 (1200) | 6′-0″ (1.80 m) | 29 (740) | 5′-5″ (1.64 m) | 8′-5″ (2.568 m) | 30′-2 1/4″ (9.1 m) | 19′-11 1/2″ (5.99 m) | 6′-3 1/2″ (1.89 m) | 4′-10″ (1.473 m) | 14′-10 1/2″ (4.48 m) | 15′-3 3/4″ (4.62 m) | 5 3/4 (150) | 1 1/4 (30) | 35° | 18.8 (14.4) | 121 (101) |
| | 54 (1350) | 6′-7″ (2.08 m) | 32 (810) | 5′-11 1/2″ (1.85 m) | 9′-5 1/4″ (2.878 m) | 33′-2 3/4″ (10.39 m) | 21′-10 3/4″ (6.92 m) | 6′-10 3/4″ (2.18 m) | 5′-5″ (1.651 m) | 16′-4 3/4″ (5.13 m) | 16′-10″ (5.26 m) | 5 3/4 (150) | 1 1/4 (30) | 35° | 22.4 (17.1) | 150 (125) |
| | 60 (1500) | 7′-2″ (2.16 m) | 35 (890) | 6′-6″ (1.97 m) | 10′-5 1/2″ (3.188 m) | 36′-3 1/2″ (10.97 m) | 23′-10″ (7.18 m) | 7′-6 1/4″ (2.27 m) | 6′-0″ (1.829 m) | 17′-11 1/4″ (5.42 m) | 18′-4 1/4″ (5.55 m) | 5 3/4 (150) | 1 1/4 (30) | 35° | 26.4 (20.2) | 165 (138) |
| 60° | 42 (1050) | 5′-5″ (1.66 m) | 26 (660) | 4′-10 1/2″ (1.49 m) | 8′-6″ (2.59 m) | 30′-11 3/4″ (9.48 m) | 20′-11 1/4″ (6.42 m) | 5′-7 1/4″ (1.72 m) | 4′-3″ (1.295 m) | 15′-3″ (4.67 m) | 15′-8 3/4″ (4.81 m) | 6 1/4 (160) | 1 (30) | 30° | 17.7 (13.5) | 118 (98) |
| | 48 (1200) | 6′-0″ (1.80 m) | 29 (740) | 5′-5″ (1.64 m) | 9′-8″ (2.946 m) | 34′-5 3/4″ (10.39 m) | 23′-2 1/4″ (6.96 m) | 6′-2 1/2″ (1.87 m) | 4′-10″ (1.473 m) | 17′-0″ (5.12 m) | 17′-5 3/4″ (5.27 m) | 6 1/4 (160) | 1 (30) | 30° | 21.5 (16.4) | 137 (115) |
| | 54 (1350) | 6′-7″ (2.08 m) | 32 (810) | 5′-11 1/2″ (1.85 m) | 10′-10″ (3.302 m) | 37′-11 1/4″ (11.87 m) | 25′-5 1/4″ (8.04 m) | 6′-9 3/4″ (2.16 m) | 5′-5″ (1.651 m) | 18′-9″ (5.86 m) | 19′-2 3/4″ (6.01 m) | 6 1/4 (160) | 1 (30) | 30° | 25.7 (19.6) | 170 (142) |
| | 60 (1500) | 7′-2″ (2.16 m) | 35 (890) | 6′-6″ (1.97 m) | 12′-0″ (3.658 m) | 41′-5 3/4″ (12.55 m) | 27′-8 1/4″ (8.35 m) | 7′-5″ (2.24 m) | 6′-0″ (1.829 m) | 20′-6″ (6.2 m) | 20′-11 3/4″ (6.35 m) | 6 1/4 (160) | 1 (30) | 30° | 30.2 (23.1) | 187 (157) |

Illinois Department of Transportation

APPROVED April 1, 2016
ENGINEER OF BRIDGES AND STRUCTURES

APPROVED April 1, 2016
ENGINEER OF DESIGN AND ENVIRONMENT

ISSUED 1-1-97

**REINFORCED CONCRETE END SECTIONS FOR PIPE CULVERTS**
**42″ (1050 mm) THRU 60″ (1500 mm) DIA.**
**SKEWED WITH ROADWAY**

(Sheet 5 of 5)

**STANDARD 542206–04**

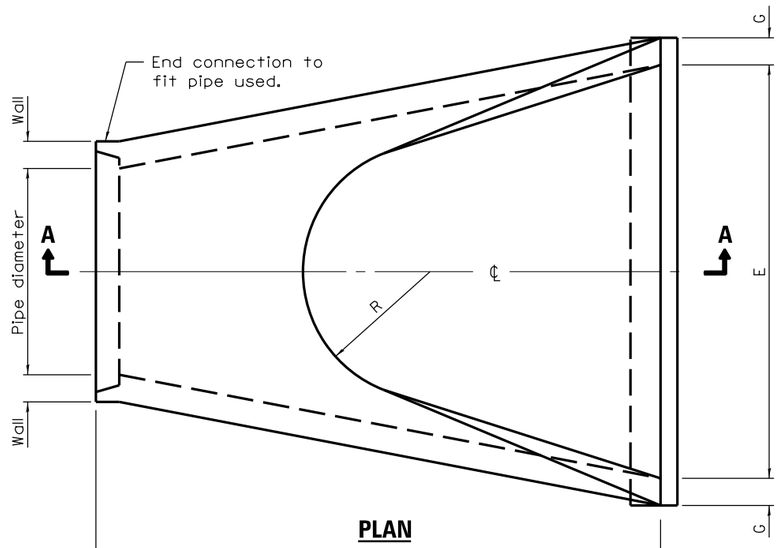


**PLAN**

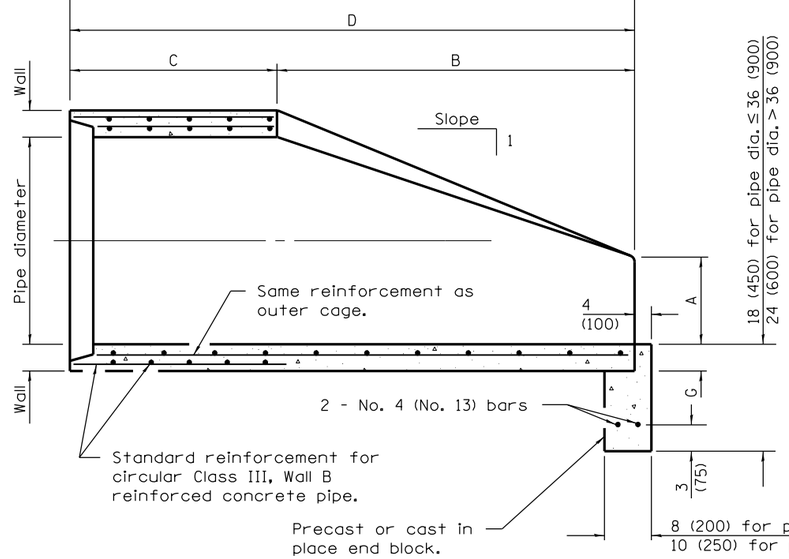


**SECTION A–A**

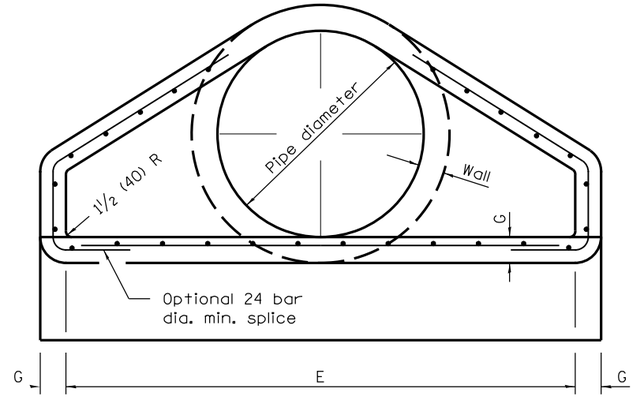


**END VIEW**

| PIPE DIA. | APPROX. QTY. lbs. (kg) | WALL | A | B | C | D | E | G | R | APPROX. SLOPE |
|---|---|---|---|---|---|---|---|---|---|---|
| 12 (300) | 530 (240) | 2 (51) | 4 (102) | 24 (610) | 4′-0⅞″ (1.241 m) | 6′-0⅞″ (1.851 m) | 24 (610) | 2 (51) | 9 (229) | 1:2.4 |
| 15 (375) | 740 (335) | 2¼ (57) | 6 (152) | 27 (686) | 3′-10″ (1.168 m) | 6′-1″ (1.854 m) | 30 (762) | 2¼ (57) | 11 (280) | 1:2.4 |
| 18 (450) | 990 (450) | 2½ (64) | 9 (229) | 27 (686) | 3′-10″ (1.168 m) | 6′-1″ (1.854 m) | 36 (914) | 2½ (64) | 12 (305) | 1:2.4 |
| 21 (525) | 1280 (580) | 2¾ (70) | 9 (229) | 35 (889) | 38 (965) | 6′-1″ (1.854 m) | 3′-6″ (1.067 m) | 2¾ (70) | 13 (330) | 1:2.4 |
| 24 (600) | 1520 (690) | 3 (76) | 9½ (241) | 3′-7½″ (1.105 m) | 30 (762) | 6′-1½″ (1.867 m) | 4′-0″ (1.219 m) | 3 (76) | 14 (356) | 1:2.5 |
| 27 (675) | 1930 (875) | 3¼ (83) | 10½ (267) | 4′-0″ (1.219 m) | 25½ (648) | 6′-1½″ (1.867 m) | 4′-6″ (1.372 m) | 3¼ (83) | 14½ (368) | 1:2.4 |
| 30 (750) | 2190 (995) | 3½ (89) | 12 (305) | 4′-6″ (1.375 m) | 19¾ (502) | 6′-1¾″ (1.874 m) | 5′-0″ (1.524 m) | 3½ (89) | 15 (381) | 1:2.5 |
| 33 (825) | 3200 (1450) | 3¾ (95) | 13½ (343) | 4′-10½″ (1.486 m) | 39¼ (997) | 8′-1¾″ (2.483 m) | 5′-6″ (1.676 m) | 3¾ (95) | 17½ (445) | 1:2.5 |
| 36 (900) | 4100 (1860) | 4 (102) | 15 (381) | 5′-3″ (1.6 m) | 34¾ (883) | 8′-1¾″ (2.483 m) | 6′-0″ (1.829 m) | 4 (102) | 20 (508) | 1:2.5 |
| 42 (1050) | 5380 (2440) | 4½ (114) | 21 (533) | 5′-3″ (1.6 m) | 35 (889) | 8′-2″ (2.489 m) | 6′-6″ (1.981 m) | 4½ (114) | 22 (559) | 1:2.5 |
| 48 (1200) | 6550 (2970) | 5 (127) | 24 (610) | 6′-0″ (1.829 m) | 26 (660) | 8′-2″ (2.489 m) | 7′-0″ (2.134 m) | 5 (127) | 22 (559) | 1:2.5 |
| 54 (1350) | 8240 (3740) | 5½ (140) | 27 (686) | 5′-5″ (1.651 m) | 35 (889) | 8′-4″ (2.54 m) | 7′-6″ (2.286 m) | 5½ (140) | 24 (610) | 1:2.0 |
| 60 (1500) | 8730 (3960) | 6 (152) | 35 (889) | 5′-0″ (1.524 m) | 39 (991) | 8′-3″ (2.515 m) | 8′-0″ (2.438 m) | 5 (127) | • | 1:1.9 |
| 66 (1650) | 10710 (4860) | 6½ (165) | 30 (762) | 6′-0″ (1.829 m) | 27 (686) | 8′-3″ (2.515 m) | 8′-6″ (2.591 m) | 5½ (140) | • | 1:1.7 |
| 72 (1800) | 12520 (5680) | 7 (178) | 36 (914) | 6′-6″ (1.981 m) | 21 (533) | 8′-3″ (2.514 m) | 9′-0″ (2.743 m) | 6 (152 | • | 1:1.8 |
| 78 (1950) | 14770 (6700) | 7½ (191) | 36 (914) | 7′-6″ (2.286 m) | 21 (533) | 9′-3″ (2.819 m) | 9′-6″ (2.896 m) | 6½ (165) | • | 1:1.8 |
| 84 (2100) | 18160 (8240) | 8 (203) | 36 (914) | 7′-6½″ (2.299 m) | 21 (533) | 9′-3½″ (2.832 m) | 10′-0″ (3.048 m) | 6½ (165) | • | 1:1.6 |

• Radius as furnished by manufacturer

## GENERAL NOTES

All slope ratios are expressed as units of vertical displacement to units of horizontal displacement (V:H).

All dimensions are in inches (millimeters) unless otherwise shown.

Illinois Department of Transportation

APPROVED January 1, 2011
ENGINEER OF BRIDGES AND STRUCTURES

APPROVED January 1, 2011
ENGINEER OF DESIGN AND ENVIRONMENT

ISSUED 1-1-97

| DATE | REVISIONS |
|---|---|
| 1-1-11 | Clarified ref. to pipe dia. |
| | on Section A-A. Changed |
| | 'inner' to 'outer' cage ref. |
| 1-1-09 | Switched units to |
| | English (metric). |
| | |

# PRECAST REINFORCED CONCRETE FLARED END SECTION

**STANDARD 542301–03**

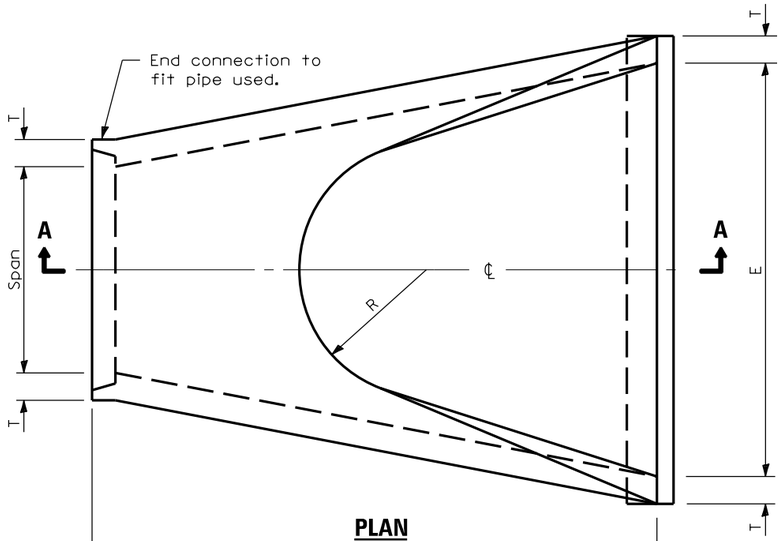


**PLAN**

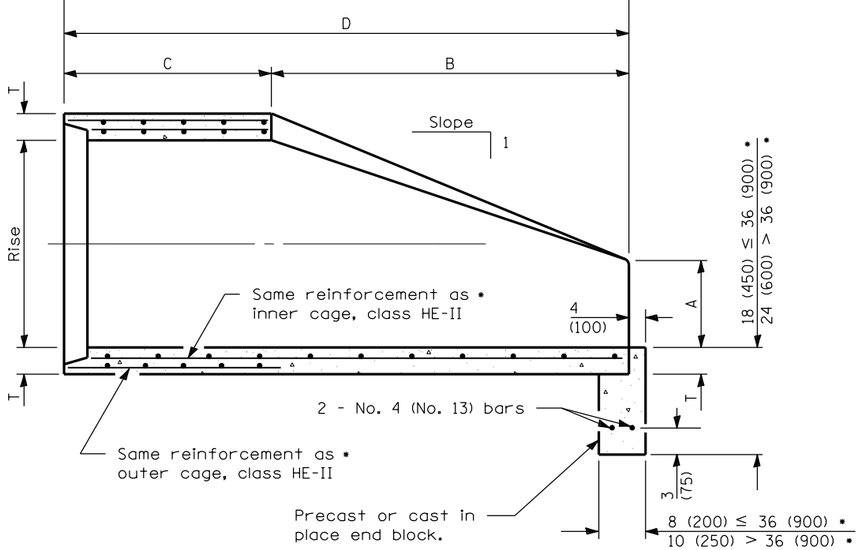


• Refers to the equivalent pipe diameter.

**SECTION A–A**

| SPAN | RISE | EQUIV. DIA. | WALL T | A | B | C | D | E | H | R | $R_1$ | $R_2$ | APPROX. SLOPE |
|---|---|---|---|---|---|---|---|---|---|---|---|---|---|
| 23 (584) | 14 (356) | 18 (450) | 2¾ (70) | 8 (203) | 27 (686) | 3′-9″ (1.143 m) | 6′-0″ (1.829 m) | 36 (914) | 5⅜ (137) | 6 (152) | 6 (152) | 20 (508) | 1:3.1 |
| 30 (762) | 19 (483) | 24 (600) | 3¼ (83) | 8½ (216) | 39 (991) | 33 (838) | 6′-0″ (1.829 m) | 4′-0″ (1.219 m) | 6⅞ (175) | 7 (178) | 8¼ (210) | 26¼ (667) | 1:2.8 |
| 34 (864) | 22 (559) | 27 (675) | 3½ (89) | 9 (229) | 4′-0″ (1.219 m) | 24 (610) | 6′-0″ (1.829 m) | 4′-6″ (1.372 m) | 7¾ (197) | 8 (203) | 9¼ (235) | 29¼ (743) | 1:2.9 |
| 38 (965) | 24 (610) | 30 (750) | 3½ (95) | 9½ (241) | 4′-6″ (1.372 m) | 18 (475) | 6′-0″ (1.829 m) | 5′-0″ (1.524 m) | 8⅝ (219) | 9 (229) | 10¼ (260) | 32¾ (832) | 1:2.9 |
| 45 (1143) | 29 (737) | 36 (900) | 4½ (114) | 11¼ (286) | 5′-0″ (1.524 m) | 36 (914) | 8′-0″ (2.438 m) | 6′-0″ (1.829 m) | 10½ (267) | 12 (305) | 12¼ (311) | 39¼ (997) | 1:2.7 |
| 53 (1346) | 34 (864) | 42 (1050) | 5 (127) | 15¾ (400) | 5′-0″ (1.524 m) | 36 (914) | 8′-0″ (2.438 m) | 6′-6″ (1.981 m) | 12⅛ (308) | 13 (330) | 14½ (368) | 3′-10″ (1.168 m) | 1:2.6 |
| 60 (1524) | 38 (965) | 48 (1200) | 5½ (140) | 21 (533) | 5′-0″ (1.524 m) | 36 (914) | 8′-0″ (2.438 m) | 7′-0″ (2.134 m) | 13½ (343) | 14 (356) | 16½ (419) | 4′-3½″ (1.308 m) | 1:2.7 |
| 68 (1727) | 43 (1092) | 54 (1350) | 6 (152) | 26 (660) | 5′-0″ (1.524 m) | 36 (914) | 8′-0″ (2.438 m) | 7′-6″ (2.286 m) | 15¼ (387) | 16 (406) | 18¾ (476) | 4′-10½″ (1.486 m) | 1:2.6 |
| 76 (1930) | 48 (1219) | 60 (1500) | 6½ (165) | 31 (787) | 5′-0″ (1.524 m) | 36 (914) | 8′-0″ (2.438 m) | 8′-0″ (2.439 m) | 17 (432) | 18 (457) | 20¾ (527) | 5′-5″ (1.651 m) | 1:2.6 |

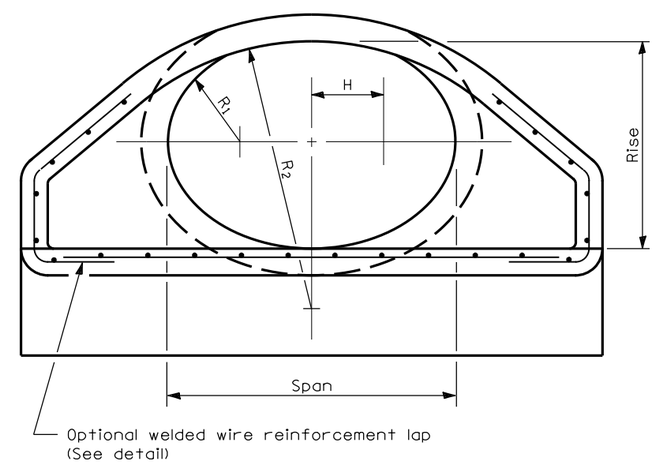


**END VIEW**

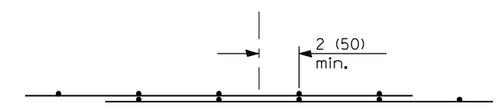


**OPTIONAL WELDED WIRE REINFORCEMENT LAP**

## GENERAL NOTES

All slope ratios are expressed as units of vertical displacement to units of horizontal displacement (V:H).

All dimensions are in inches (millimeters) unless otherwise shown.

Illinois Department of Transportation

APPROVED April 1, 2016
ENGINEER OF BRIDGES AND STRUCTURES

APPROVED April 1, 2016
ENGINEER OF DESIGN AND ENVIRONMENT

ISSUED 1-1-97

| DATE | REVISIONS |
|---|---|
| 4-1-16 | Changed terminology to |
| | 'welded wire reinforcement'. |
| | Corrected min. lap dimension. |
| 1-1-09 | Switched units to |
| | English (metric). |
| | |

# PRECAST REINFORCED CONCRETE ELLIPTICAL FLARED END SECTION

**STANDARD 542306–03**

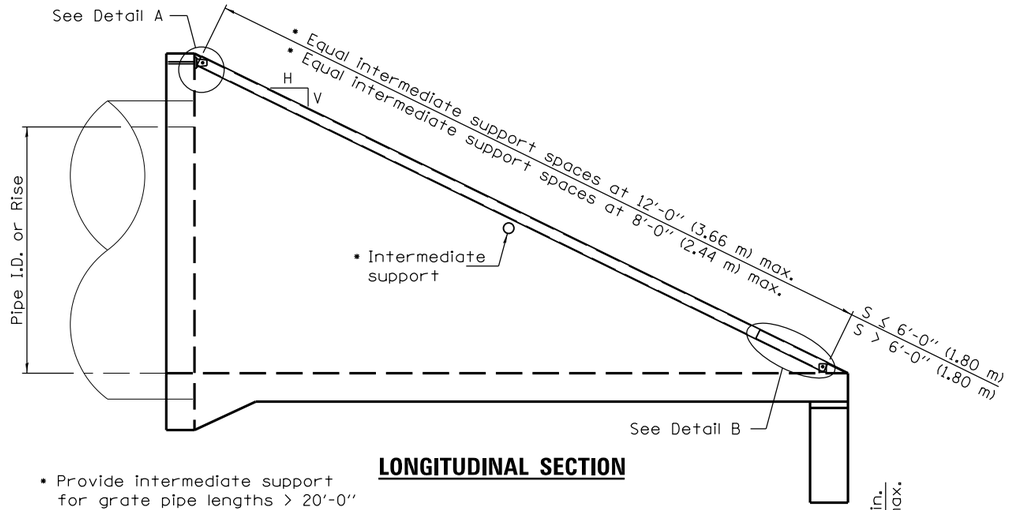


## LONGITUDINAL SECTION

• Provide intermediate support for grate pipe lengths > 20'-0" (6.00 m).

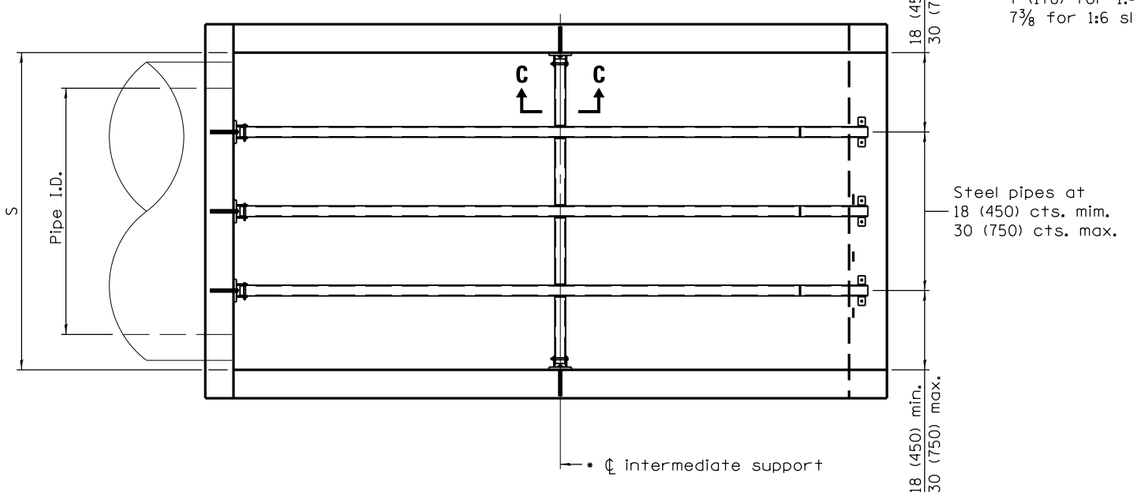


## PLAN VIEW

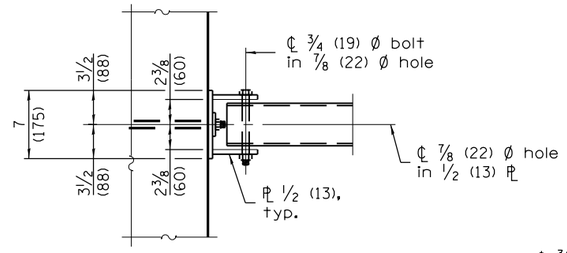


## VIEW A–A

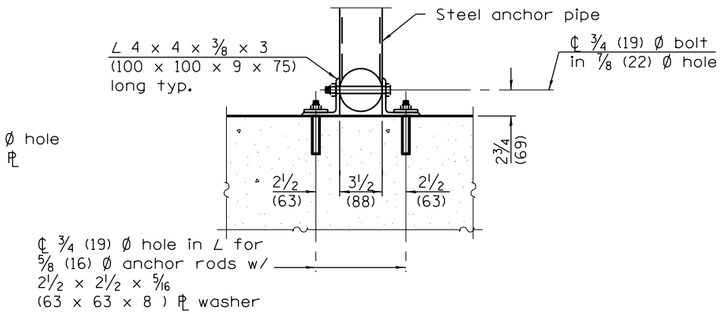


## SECTION B–B

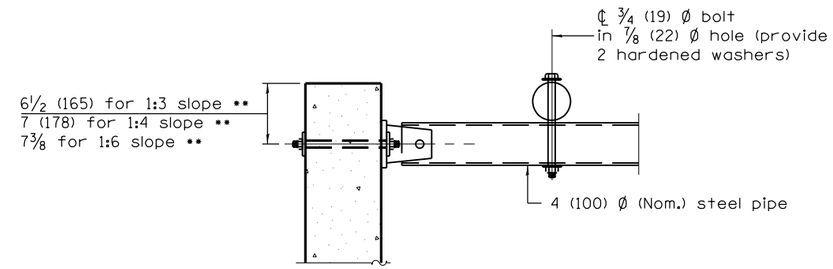


## SECTION D–D

•• Measured perpendicular to top of culvert wall. In addition, formed hole shall be located a minimum of 6 (150) measured horizontally from any vertical joints necessary for construction of the culvert end section.

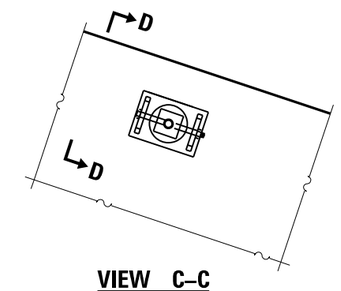


## VIEW C–C

(See Detail A for dimensions and details not shown.)

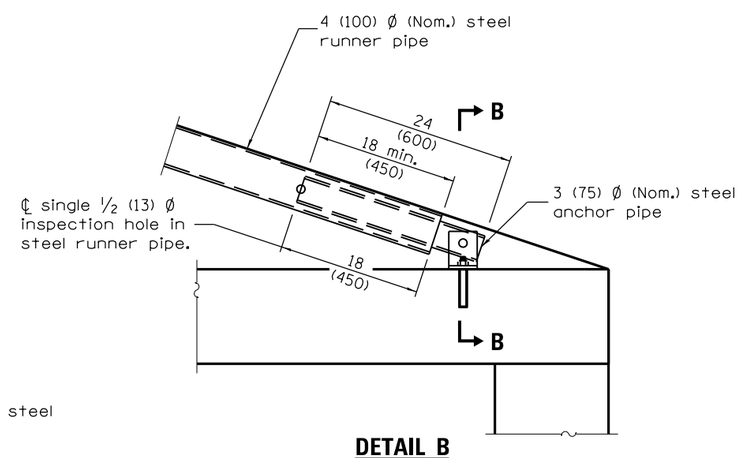


## DETAIL B

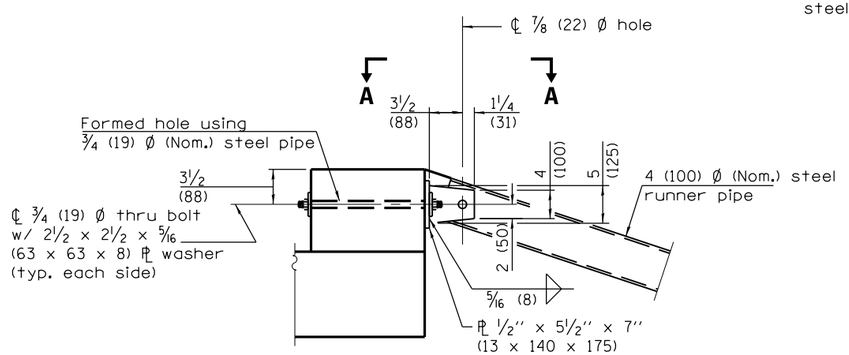


## DETAIL A

## GENERAL NOTES

This standard shall only be used on concrete end sections not skewed more than ± 15 degrees with roadway.

The minimum distance from the center of a hole to the free edge of a structural shape or plate shall be 1½ (38) unless noted otherwise.

All dimensions are in inches (millimeters) unless otherwise shown.

Illinois Department of Transportation

PASSED April 1, 2016
ENGINEER OF BRIDGES AND STRUCTURES
APPROVED April 1, 2016
ENGINEER OF DESIGN AND ENVIRONMENT

ISSUED 1-1-97

| DATE | REVISIONS |
|---|---|
| 4-1-16 | Corrected typo. |
| | |
| | |
| 1-1-14 | Added 27 (675) pipe culvert |
| | to sched. Modified dimension |
| | in SECTION D-D. |

# TRAVERSABLE PIPE GRATE

(Sheet 1 of 2)

STANDARD 542311–06

## PIPE–GRATE SCHEDULE FOR PIPE CULVERT END SECTIONS

| Pipe I.D. | Slope of End Section | | | | | | | | |
|---|---|---|---|---|---|---|---|---|---|
| | 1:3 | | | 1:4 | | | 1:6 | | |
| | Main Pipe No. / Length | Int. Support No. / Length | Total Length of Pipe | Main Pipe No. / Length | Int. support No. / Length | Total Length of Pipe | Main Pipe No. / Length | Int. Support No. / Length | Total Length of Pipe |
| 27 (675) | 1 @ 9′-8″ 1 @ (2.95 m) | N/A | 9′-8″ (2.95 m) | 1 @ 12′-11″ 1 @ (3.94 m) | N/A | 12′-11″ (3.94 m) | 1 @ 19′-7″ 1 @ (5.97 m) | N/A | 19′-7″ (5.97 m) |
| 30 (750) | 1 @ 11′-4″ 1 @ (3.43 m) | N/A | 11′-4″ (3.43 m) | 1 @ 14′-10″ 1 @ (4.52 m) | N/A | 14′-10″ (4.52 m) | 1 @ 21′-10″ 1 @ (6.65 m) | 1 @ 3′-6 1 @ 1.07 m) | 25′-4″ (7.72 m) |
| 33 (825) | 1 @ 12′-1″ 1 @ (3.68 m) | N/A | 12′-1″ (3.68 m) | 1 @ 15′-10″ 1 @ (4.83 m) | N/A | 15′-10″ (4.83 m) | 1 @ 23′-5″ 1 @ (7.14 m) | 1 @ 3′-7″ 1 @ (1.09 m) | 27′-0″ (8.23 m) |
| 36 (900) | 1 @ 12′-10″ 1 @ (3.91 m) | N/A | 12′-10″ (3.91 m) | 1 @ 16′-10″ 1 @ (5.13 m) | N/A | 16′-10″ (5.13 m) | 1 @ 24′-11″ 1 @ (7.59 m) | 2 @ 3′-11″ 2 @ (1.19 m) | 32′-9″ (9.97 m) |
| 42 (1050) | 2 @ 14′-9″ 2 @ (4.50 m) | N/A | 29′-6″ (9.00 m) | 2 @ 19′-3″ 2 @ (5.87 m) | N/A | 38′-6″ (11.74 m) | 2 @ 28′-6″ 2 @ (8.69 m) | 2 @ 4′-7″ 2 @ (1.40 m) | 66′-2″ (20.18 m) |
| 48 (1200) | 2 @ 16′-4″ 2 @ (4.98 m) | N/A | 32′-8″ (9.96 m) | 2 @ 21′-4″ 2 @ (6.50 m) | 1 @ 5′-1″ 1 @ (1.55 m) | 47′-9″ (14.55 m) | 2 @ 31′-6″ 2 @ (9.60 m) | 2 @ 5′-1″ 2 @ (1.55 m) | 73′-2″ (22.30 m) |
| 54 (1350) | 2 @ 18′-2″ 2 @ (5.54 m) | N/A | 36′-4″ (11.08 m) | 2 @ 23′-9″ 2 @ (7.24 m) | 2 @ 5′-9″ 2 @ (1.75 m) | 59′-0″ (16.23 m) | 2 @ 35′-1 2 @ (10.69 m) | 4 @ 5′-9″ 4 @ (1.75 m) | 93′-2″ (28.38 m) |
| 60 (1500) | 2 @ 19′-9″ 2 @ (6.02 m) | N/A | 39′-6″ (12.04 m) | 2 @ 25′-10″ 2 @ (7.87 m) | 3 @ 6′-3″ 3 @ (1.91 m) | 70′-5″ (21.47 m) | 2 @ 38′-1″ 2 @ (11.61 m) | 4 @ 6′-3″ 4 @ (1.91 m) | 101′-2″ (30.86 m) |
| 66 (1650) | 2 @ 21′-7″ 2 @ (6.58 m) | 2 @ 6′-11″ 2 @ (2.11 m) | 57′-0″ (17.38 m) | 2 @ 28′-2″ 2 @ (8.59 m) | 3 @ 6′-11″ 3 @ (2.11 m) | 77′-1″ (23.51 m) | 2 @ 41′-11″ 2 @ (12.78 m) | 5 @ 6′-11″ 5 @ (2.11 m) | 127′-5″ (36.11 m) |
| 72 (1800) | 3 @ 23′-2″ 3 @ (7.06 m) | 2 @ 7′-5″ 2 @ (2.26 m) | 84′-4″ (25.70 m) | 3 @ 30′-3″ 3 @ (9.22 m) | 3 @ 7′-5″ 3 @ (2.26 m) | 113′-0″ (34.44 m) | 3 @ 44′-8″ 3 @ (13.61 m) | 5 @ 7′-5″ 5 @ (2.26 m) | 171′-1″ (52.13 m) |
| 78 (1950) | 3 @ 25′-0″ 3 @ (7.62 m) | 3 @ 8′-1″ 3 @ (2.46 m) | 99′-3″ (30.24 m) | 3 @ 32′-8″ 3 @ (9.96 m) | 4 @ 8′-1″ 4 @ (2.46 m) | 130′-4″ (39.72 m) | 3 @ 48′-3″ 3 @ (14.71 m) | 6 @ 8′-1″ 6 @ (2.46 m) | 193′-3″ (58.89 m) |
| 84 (2100) | 3 @ 26′-7″ 3 @ (8.10 m) | 3 @ 8′-7″ 3 @ (2.62 m) | 105′-6″ (32.16 m) | 3 @ 34′-9″ 3 @ (10.59 m) | 4 @ 8′-7″ 4 @ (2.62 m) | 138′-7″ (42.25 m) | 3 @ 51′-3″ 3 @ (15.62 m) | 6 @ 8′-7″ 6 @ (2.62 m) | 206′-3″ (62.58 m) |

## PIPE–GRATE SCHEDULE FOR ELLIPTICAL PIPE CULVERT END SECTIONS

| Pipe I.D. (Equiv. Round) | Slope of End Section | | | | | | | | |
|---|---|---|---|---|---|---|---|---|---|
| | 1:3 | | | 1:4 | | | 1:6 | | |
| | Main Pipe No. / Length | Int. Support No. / Length | Total Length of Pipe | Main Pipe No. / Length | Int. Support No. / Length | Total Length of Pipe | Main Pipe No. / Length | Int. Support No. / Length | Total Length of Pipe |
| 21 (525) | 1 @ 8′-2″ 1 @ (2.49 m) | N/A | 8′-2″ (2.49 m) | 1 @ 11′-2″ 1 @ (3.40 m) | N/A | 11′-2″ (3.40 m) | 1 @ 17′-5″ 1 @ (5.31 m) | N/A | 17′-5″ (5.31 m) |
| 24 (600) | 1 @ 8′-2″ 1 @ (2.49 m) | N/A | 8′-2″ (2.49 m) | 1 @ 11′-2″ 1 @ (3.40 m) | N/A | 11′-2″ (3.40 m) | 1 @ 17′-5″ 1 @ (5.31 m) | N/A | 17′-5″ (5.31 m) |
| 27 (675) | 1 @ 8′-11″ 1 @ (2.72 m) | N/A | 8′-11″ (2.72 m) | 1 @ 12′-2″ 1 @ (3.71 m) | N/A | 12′-2″ (3.71 m) | 1 @ 18′-11″ 1 @ (5.77 m) | N/A | 18′-11″ (5.77 m) |
| 30 (750) | 1 @ 9′-5″ 1 @ (2.87 m) | N/A | 9′-5″ (2.87 m) | 1 @ 12′-11″ 1 @ (3.94 m) | N/A | 12′-11″ (3.94 m) | 1 @ 19′-11″ 1 @ (6.07 m) | N/A | 19′-11″ (6.07 m) |
| 36 (900) | 2 @ 11′-0″ 2 @ (3.35 m) | N/A | 22′-0″ (6.70 m) | 2 @ 14′-11″ 2 @ (4.55 m) | N/A | 29′-10″ (9.10 m) | 2 @ 22′-11″ 2 @ (6.99 m) | 1 @ 4′-7″ 1 @ (1.40 m) | 50′-5″ (15.38 m) |
| 42 (1050) | 2 @ 12′-4″ 2 @ (3.76 m) | N/A | 24′-8″ (7.52 m) | 2 @ 16′-8″ 2 @ (5.08 m) | N/A | 33′-4″ (10.16 m) | 2 @ 25′-6″ 2 @ (7.77 m) | 2 @ 5′-5″ 2 @ (1.65 m) | 61′-10″ (18.84 m) |
| 48 (1200) | 2 @ 13′-8″ 2 @ (4.17 m) | N/A | 27′-4″ (8.34 m) | 2 @ 18′-5″ 2 @ (5.61 m) | N/A | 36′-10″ (11.22 m) | 2 @ 28′-0″ 2 @ (8.53 m) | 3 @ 6′-1″ 3 @ (1.85 m) | 64′-3″ (22.61 m) |
| 54 (1350) | 2 @ 15′-0″ 2 @ (4.75 m) | N/A | 30′-0″ (9.50 m) | 2 @ 20′-1″ 2 @ (6.12 m) | 2 @ 6′-9″ 2 @ (2.06 m) | 53′-8″ (16.36 m) | 2 @ 30′-7″ 2 @ (9.32 m) | 3 @ 6′-9″ 3 @ (2.06 m) | 81′-5″ (24.82 m) |
| 60 (1500) | 3 @ 16′-7″ 3 @ (5.05 m) | N/A | 49′-9″ (15.15 m) | 3 @ 22′-2″ 3 @ (6.76 m) | 2 @ 7′-7″ 2 @ (2.31 m) | 81′-8″ (24.90 m) | 3 @ 33′-7″ 3 @ (10.24 m) | 4 @ 7′-7″ 4 @ (2.31 m) | 131′-1″ (39.96 m) |
| 66 (1650) | 3 @ 17′-11″ 3 @ (5.46 m) | N/A | 53′-9″ (16.38 m) | 3 @ 23′-11″ 3 @ (7.29 m) | 2 @ 8′-3″ 2 @ (2.51 m) | 88′-3″ (26.89 m) | 3 @ 36′-2″ 3 @ (11.02 m) | 4 @ 8′-3″ 4 @ (2.51 m) | 141′-6″ (43.10 m) |
| 72 (1800) | 3 @ 19′-6″ 3 @ (5.94 m) | N/A | 58′-6″ (17.82 m) | 3 @ 25′-11″ 3 @ (7.90 m) | 3 @ 8′-11″ 3 @ (2.72 m) | 104′-6″ (31.86 m) | 3 @ 39′-2″ 3 @ (11.94 m) | 4 @ 8′-11″ 4 @ (2.72 m) | 153′-2″ (46.70 m) |

Illinois Department of Transportation

PASSED April 1, 2016

ENGINEER OF BRIDGES AND STRUCTURES

APPROVED April 1, 2016

ENGINEER OF DESIGN AND ENVIRONMENT

ISSUED 1-1-97

**TRAVERSABLE PIPE GRATE**

(Sheet 2 of 2)

**STANDARD 542311–06**

| PIPE DIA. | THICK-NESS | DIMENSIONS | | | | | SLOPE (Approx.) (V:H) | BODY |
|---|---|---|---|---|---|---|---|---|
| | | A | B | H | L | W | | |
| | | 1± (25) | (max.) | 1± (25) | 1½± (38) | 2± (50) | | |
| 12 (300) | 0.064 (1.63) | 6 (150) | 6 (150) | 6 (150) | 21 (535) | 24 (610) | 1:2½ | 1 Pc. |
| 15 (375) | 0.064 (1.63) | 7 (180) | 8 (205) | 6 (150) | 26 (660) | 30 (760) | 1:2½ | 1 Pc. |
| 18 (450) | 0.079 (2.01) | 8 (205) | 10 (255) | 6 (150) | 31 (785) | 36 (915) | 1:2½ | 1 Pc. |
| 21 (525) | 0.079 (2.01) | 9 (230) | 12 (305) | 6 (150) | 36 (915) | 42 (1.065 m) | 1:2½ | 1 Pc. |
| 24 (600) | 0.079 (2.01) | 10 (255) | 13 (330) | 6 (150) | 41 (1.040 m) | 48 (1.220 m) | 1:2½ | 1 Pc. |
| 30 (750) | 0.109 (2.77) | 12 (305) | 16 (405) | 8 (205) | 51 (1.295 m) | 60 (1.525 m) | 1:2½ | 1 Pc. |
| 36 (900) | 0.109 (2.77) | 14 (355) | 19 (480) | 9 (230) | 60 (1.525 m) | 72 (1.830 m) | 1:2½ | 2 Pc. |
| 42 (1050) | 0.079 (2.01) | 16 (405) | 22 (560) | 11 (280) | 69 (1.750 m) | 84 (2.135 m) | 1:2½ | 2 Pc. |
| 48 (1200) | 0.109 (2.77) | 18 (455) | 27 (685) | 12 (305) | 78 (1.980 m) | 90 (2.285 m) | 1:2¼ | 2 Pc. |
| 54 (1350) | 0.109 (2.77) | 18 (455) | 30 (760) | 12 (305) | 84 (2.135 m) | 102 (2.590 m) | 1:2 | 2 Pc. |
| 60 (1500) | 0.109 (2.77) | 18 (455) | 33 (840) | 12 (305) | 87 (2.210 m) | 114 (2.895 m) | 1:1¾ | 3 Pc. |
| 66 (1650) | 0.109 (2.77) | 18 (455) | 36 (915) | 12 (305) | 87 (2.210 m) | 120 (3.050 m) | 1:1½ | 3 Pc. |
| 72 (1800) | 0.138 (3.51) | 18 (455) | 39 (990) | 12 (305) | 87 (2.210 m) | 126 (3.200 m) | 1:1⅓ | 3 Pc. |
| 78 (1950) | 0.168 (4.27) | 18 (455) | 42 (1.065 m) | 12 (305) | 87 (2.210 m) | 132 (3.355 m) | 1:1¼ | 3 Pc. |
| 84 (2250) | 0.168 (4.27) | 18 (455) | 45 (1.145 m) | 12 (305) | 87 (2.210 m) | 138 (3.505 m) | 1:1⅙ | 3 Pc. |

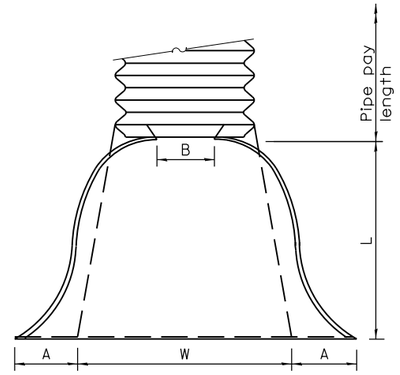


**PLAN**

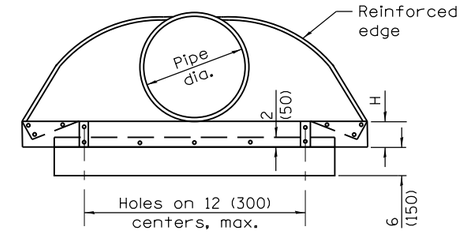


**END VIEW**

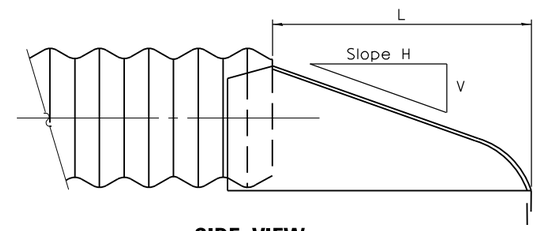


**SIDE VIEW**

**END SECTION**

## NOTES

For 60 (1500) thru 84 (2250) sizes, reinforced edges shall be supplemented with stiffener angles. The angles shall be 2x2x¼(51x51x6.4) for 60 (1500) thru 72 (1800) diameter and 2½x2½x¼ (64x64x6.4) for 78 (1950) thru 84 (2250) diameter. The angles shall be attached by ⅜ (M10) rivets or bolts.

All slope ratios are expressed as units of vertical displacement to units of horizontal displacement (V:H).

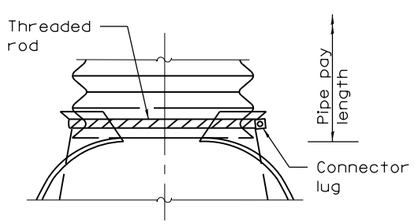


**TYPE 1**
For 12 (300) thru 24 (600) only (See Note 1)

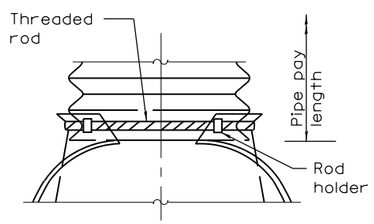


**TYPE 2**
For 30 (750) and 36 (900) only (See Note 1)

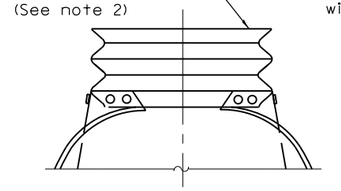


**TYPE 3**
(See Note 2)

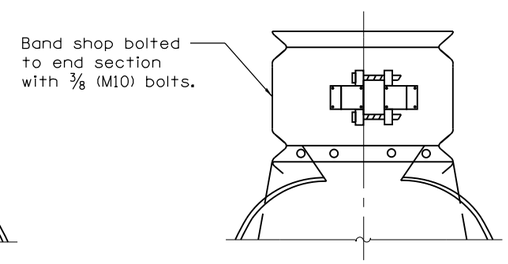


**TYPE 4**
(See Note 3)

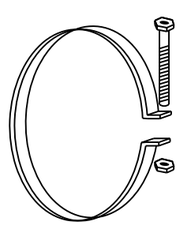

1 (25) wide, 0.109 (2.77) thick strap with standard ½x6 (M12x150) band bolt and nut.

**ALTERNATE STRAP CONNECTOR**
(For Type 1 only)

## NOTES

1. Types 1 and 2 for pipes with annular ends only.
2. Type 3 connection may be used for all pipe sizes and includes 12 (300) of the pipe length. The connector section shall be attached to the end section by rivets or bolts and shall be the same metal thickness as the end section. Stub shall be either 2⅔ (68) pitch x ½ (13) depth or 3 (75) pitch x 1 (25) depth annular corrugated pipe.
3. Type 4 connection can be used for all pipe sizes. Coupler shall be 2⅔ x ½ (68x13) dimple, hugger, or annular band of 3x1 (75x25). The dimple, hugger, or annular band may be used with corrugated metal pipes having annular ends. For corrugated metal pipes having helical ends, only the dimple band will be allowed.

All dimensions are in inches (millimeters) unless otherwise shown.

**CONNECTIONS OF END SECTIONS**

Illinois Department of Transportation

PASSED April 1, 2016
Michael Brand
ENGINEER OF POLICY AND PROCEDURES
APPROVED April 1, 2016
ENGINEER OF DESIGN AND ENVIRONMENT

ISSUED 1-1-97

| DATE | REVISIONS |
|---|---|
| 4-1-16 | Revised THICKNESS values |
| | in table. |
| | |
| 1-1-09 | Switched units to |
| | English (metric). |
| | |

# METAL END SECTION FOR PIPE CULVERTS

**STANDARD 542401–02**

| PIPE ARCH DIMENSIONS | | THICK-NESS | DIMENSIONS | | | | | SLOPE (Approx.) (V:H) | BODY |
|---|---|---|---|---|---|---|---|---|---|
| | | | A | B | H | L | W | | |
| SPAN | RISE | | 1± (25) | (max.) | 1± (25) | 1½± (38) | 2± (50) | | |
| 17 (432) | 13 (330) | 0.064 (1.63) | 7 (180) | 9 (230) | 6 (150) | 19 (485) | 30 (760) | 1:2½ | 1 Pc. |
| 21 (533) | 15 (381) | 0.064 (1.63) | 7 (180) | 10 (255) | 6 (150) | 23 (585) | 36 (915) | 1:2½ | 1 Pc. |
| 24 (610) | 18 (457) | 0.064 (1.63) | 8 (205) | 12 (305) | 6 (150) | 28 (710) | 42 (1.065 m) | 1:2½ | 1 Pc. |
| 28 (711) | 20 (508) | 0.079 (2.01) | 9 (230) | 14 (355) | 6 (150) | 32 (815) | 48 (1.220 m) | 1:2½ | 1 Pc. |
| 35 (889) | 24 (610) | 0.079 (2.01) | 10 (255) | 16 (405) | 6 (150) | 39 (990) | 60 (1.525 m) | 1:2½ | 1 Pc. |
| 42 (1067) | 29 (737) | 0.079 (2.01) | 12 (305) | 18 (460) | 8 (205) | 53 (1.170 m) | 75 (1.905 m) | 1:2½ | 1 Pc. |
| 49 (1245) | 33 (838) | 0.109 (2.77) | 13 (330) | 21 (535) | 9 (230) | 46 (1.345 m) | 85 (2.160 m) | 1:2½ | 2 Pc. |
| 57 (1448) | 38 (965) | 0.109 (2.77) | 18 (460) | 26 (660) | 12 (305) | 63 (1.600 m) | 90 (2.285 m) | 1:2½ | 2 Pc. |
| 64 (1626) | 43 (1092) | 0.109 (2.77) | 18 (460) | 30 (760) | 12 (305) | 70 (1.780 m) | 102 (2.590 m) | 1:2¼ | 2 Pc. |
| 71 (1803) | 47 (1194) | 0.138 (3.51) | 18 (460) | 33 (840) | 12 (305) | 77 (1.955 m) | 114 (2.895 m) | 1:2¼ | 3 Pc. |
| 77 (1956) | 52 (1321) | 0.168 (4.27) | 18 (460) | 36 (915) | 12 (305) | 77 (1.955 m) | 126 (3.200 m) | 1:2 | 3 Pc. |
| 83 (2108) | 57 (1448) | 0.168 (4.27) | 18 (460) | 39 (990) | 12 (305) | 77 (1.955 m) | 138 (3.505 m) | 1:2 | 3 Pc. |

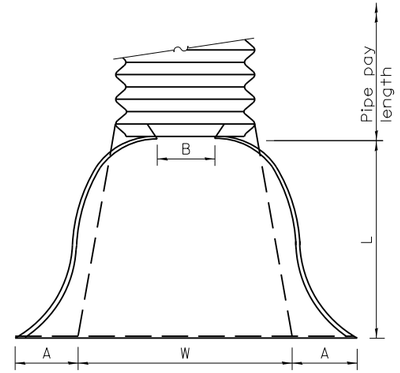


**PLAN**

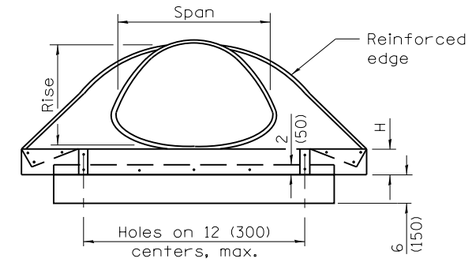


**END VIEW**

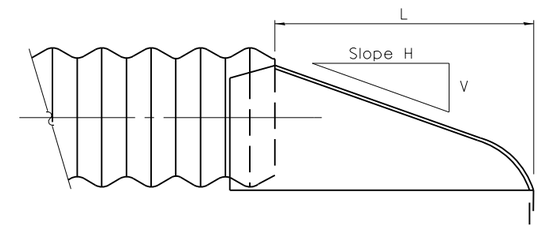


**SIDE VIEW**

**END SECTION**

## NOTES

For the 77x52 (1956x1321) and 83x57 (2108x1448) sizes, reinforced edges shall be supplemented with 2x2x¼ (51x51x6.4) stiffener angles. The angles shall be attached by ⅜ (M10) rivets or bolts.

Angle reinforcement shall be placed under the center panel seams on the 77x52 (1956x1321) and 83x57 (2108x1448) sizes.

All slope ratios are expressed as units of vertical displacement to units of horizontal displacement (V:H).

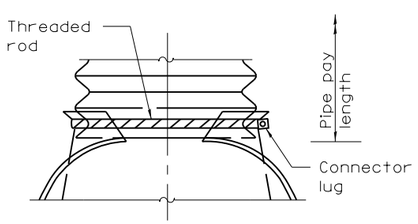


**TYPE 1**

For 17x13 (432x330) thru 28x20 (711x508) only (See Note 1)

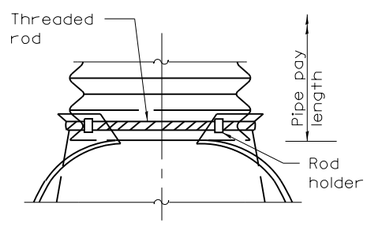


**TYPE 2**

For 17x13 (432x330) thru 57x38 (1448x965) only (See Note 1)

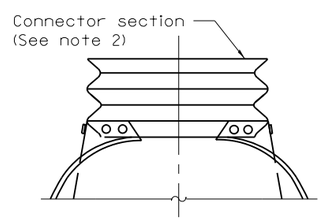


**TYPE 3**

(See Note 2)

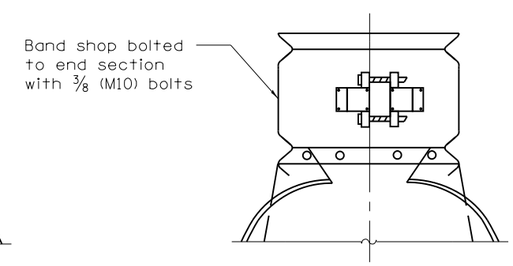


**TYPE 4**

(See Note 3)

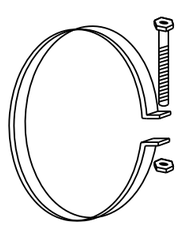

1 (25) wide, 0.109 (2.77) thick strap with standard ½x6 (M12x150) band bolt and nut.

**ALTERNATE STRAP CONNECTOR**

(For Type 1 only)

**CONNECTIONS OF END SECTIONS**

## NOTES

1. Type 1 and 2 connection shall be used only with pipes with annular ends.
2. Type 3 connection can be used with all pipe arch sizes and includes 12 (300) of the pipe length. The annular connector section shall be attached to the end section by rivets or bolts and shall be the same metal thickness as the end section. When coupling the type 3 end section to a pipe with helical ends, only the dimple type coupling band shall be used.
3. Type 4 connection can be used with all pipe arch sizes. The end section band shall be either a dimple, hugger, or annular band and can be used with pipes having annular ends. For pipes having helical ends, only the dimple end section band will be allowed.

All dimensions are in inches (millimeters) unless otherwise shown.

Illinois Department of Transportation

PASSED April 1, 2016
Michael Brand
ENGINEER OF POLICY AND PROCEDURES
APPROVED April 1, 2016
ENGINEER OF DESIGN AND ENVIRONMENT

ISSUED 1-1-97

| DATE | REVISIONS |
|---|---|
| 4-1-16 | Revised THICKNESS values |
| | in table. |
| | |
| 1-1-09 | Switched units to |
| | English (metric). |
| | |

# METAL END SECTIONS FOR PIPE ARCHES

**STANDARD 542406–02**

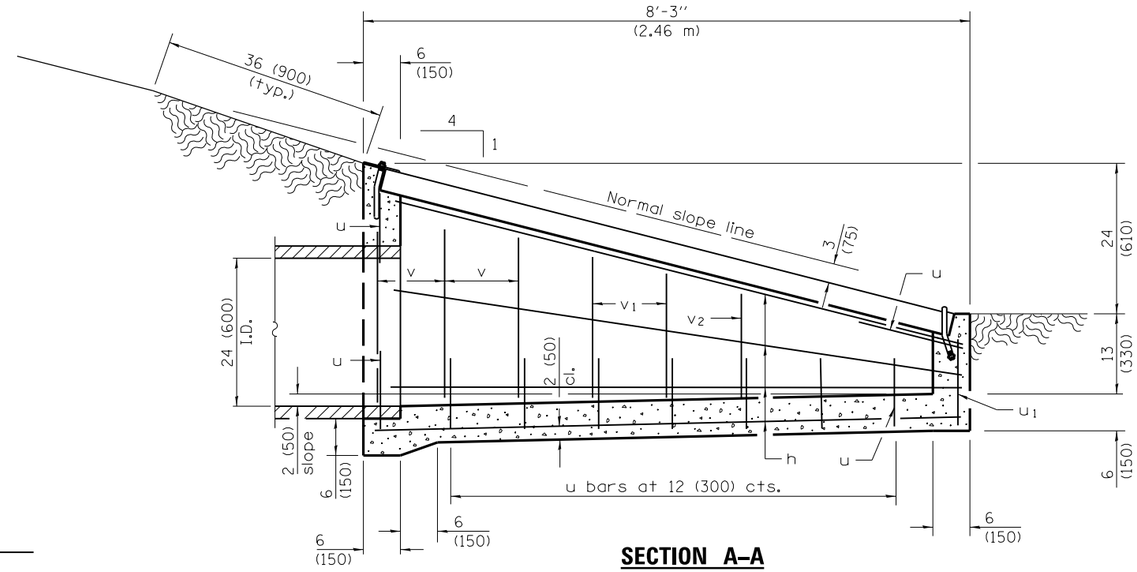


**SECTION A–A**

Material required for one inlet box

| Bar | Qty. | Size | Length |
|---|---|---|---|
| h | 10 | No. 4 (No. 13) | 7'-9" (2.35 m) |
| u | 10 | No. 4 (No. 13) | 6'-3" (1.90 m) |
| $u_1$ | 1 | No. 4 (No. 13) | 5'-8" (1.70 m) |
| v | 6 | No. 4 (No. 13) | 30 (760) |
| $v_1$ | 4 | No. 4 (No. 13) | 24 (610) |
| $v_2$ | 2 | No. 4 (No. 13) | 18 (460) |
| Galv. Steel Pipe | | 3½ (89) O.D. | 8'-0" (2.38 m) |
| Concrete | | cu. yds. ($m^3$) | 1.2 (0.9) |
| Reinf. Bars | | lbs. (kg) | 115 (52.2) |

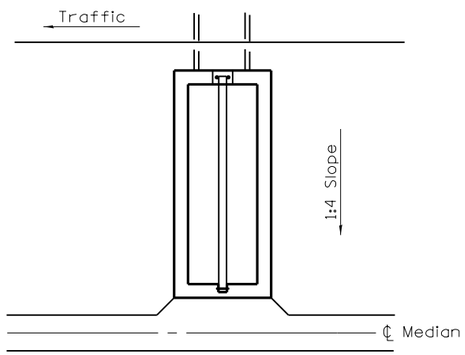


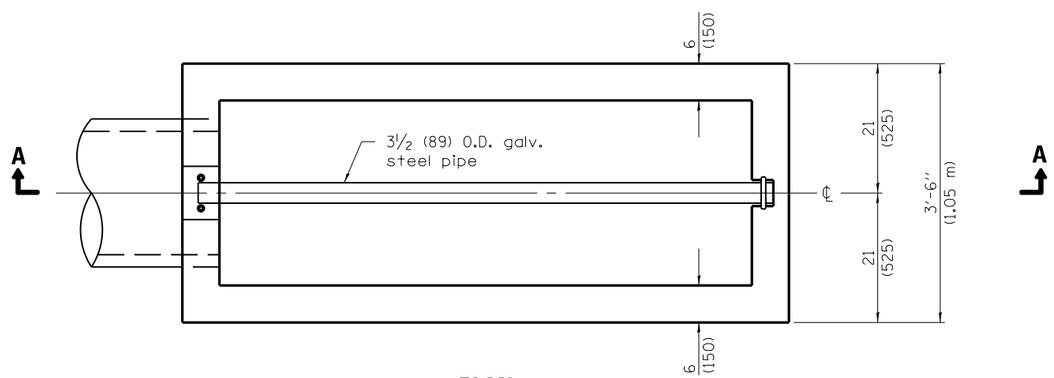


**PLAN**

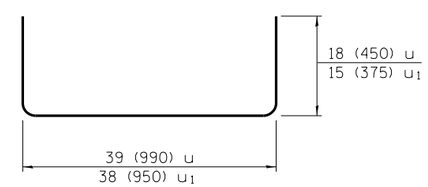


**Bars u & $u_1$**

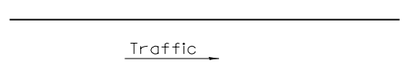


Sketch showing location and direction of box in relation to ℄ median.

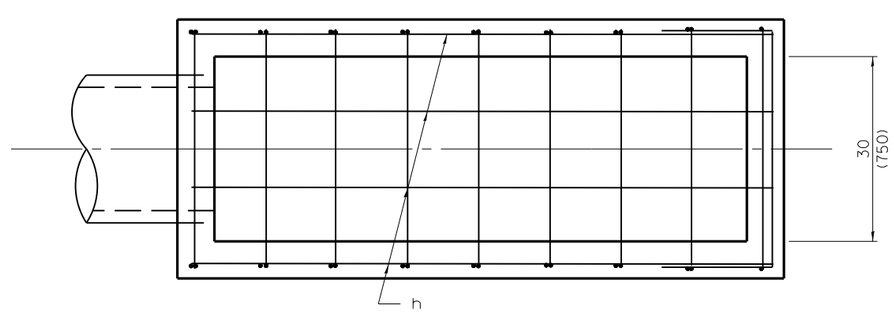


**PLAN OF REINFORCEMENT**

## GENERAL NOTES

All slope ratios are expressed as units of vertical displacement to units of horizontal displacement (V:H).

All dimensions are in inches (millimeters) unless otherwise shown.

| DATE | REVISIONS |
|---|---|
| 1-1-09 | Switched units to |
| | English (metric). |
| | |
| 1-1-07 | Soft converted metric |
| | reinforcement bars. |
| | |

# INLET BOX
# TYPE 24 (600) A

(Sheet 1 of 2)

**STANDARD 542501–02**

Illinois Department of Transportation

PASSED January 1, 2009
ENGINEER OF POLICY AND PROCEDURES

APPROVED January 1, 2009
ENGINEER OF DESIGN AND ENVIRONMENT

ISSUED 1-1-97

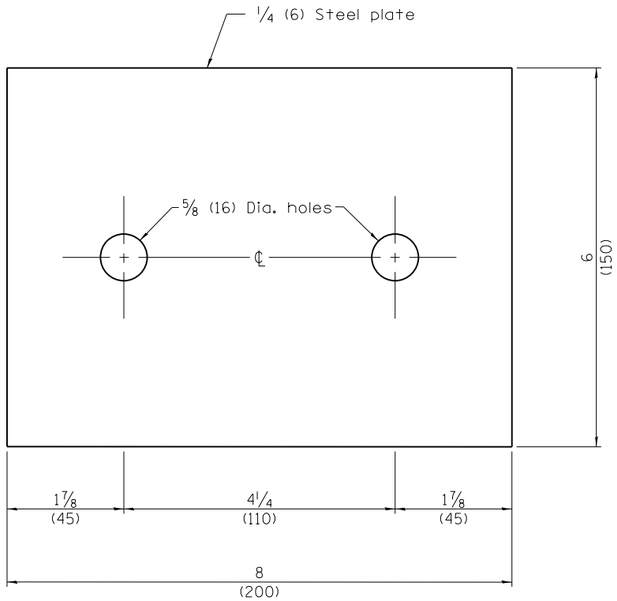


**TOP ANCHOR PLATE**

(1 - required)

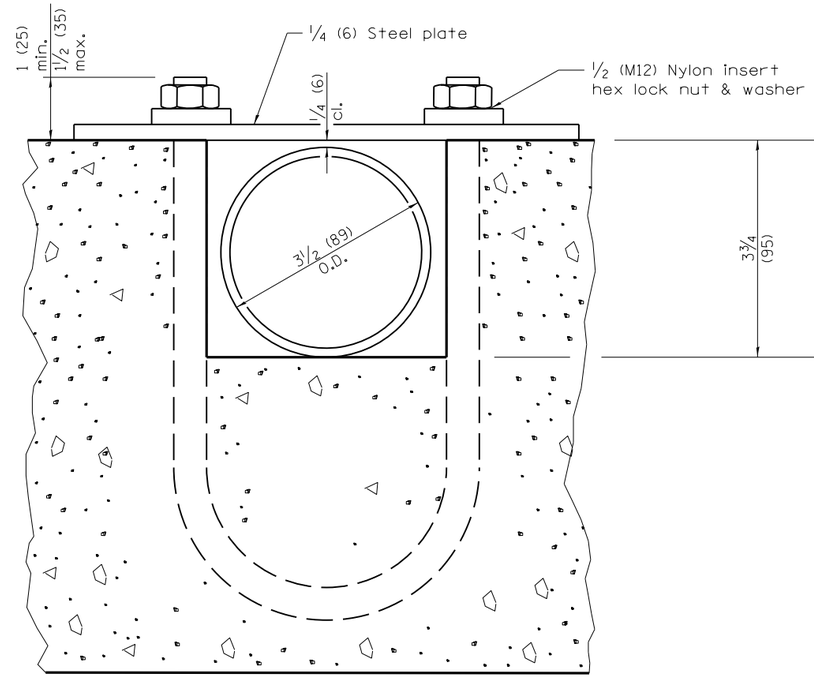


**SECTION B–B**

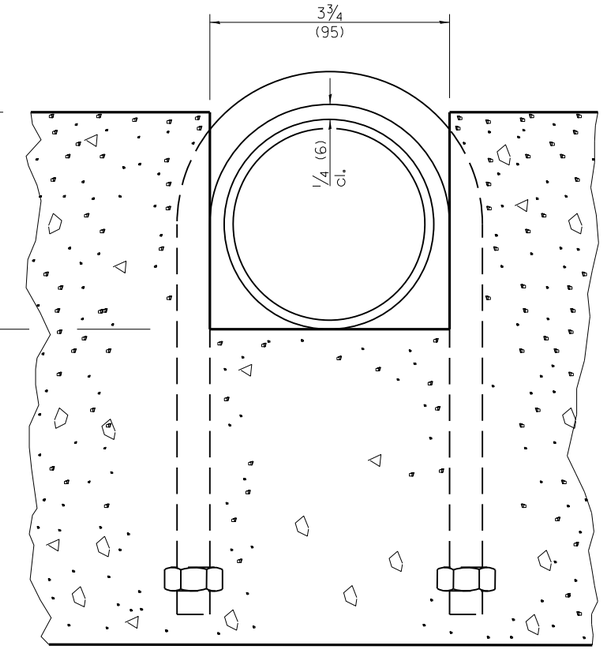


**SECTION C–C**

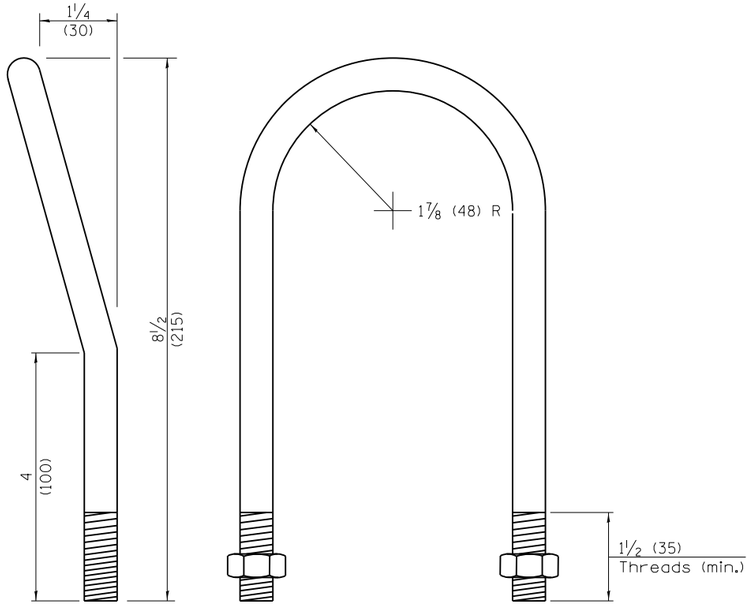


**1/2 (M12) U BOLT**

(2 - required)

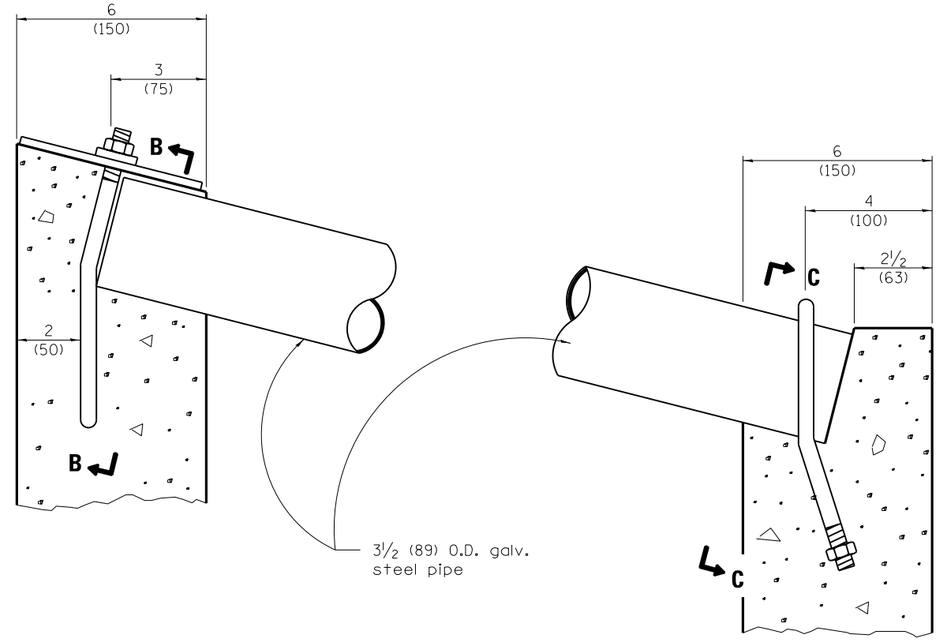


**DETAIL AT BLOCKOUTS**

Illinois Department of Transportation

PASSED January 1, 2009

ENGINEER OF POLICY AND PROCEDURES

APPROVED January 1, 2009

ENGINEER OF DESIGN AND ENVIRONMENT

ISSUED 1-1-97

# INLET BOX
# TYPE 24 (600) A

(Sheet 2 of 2)

**STANDARD 542501–02**

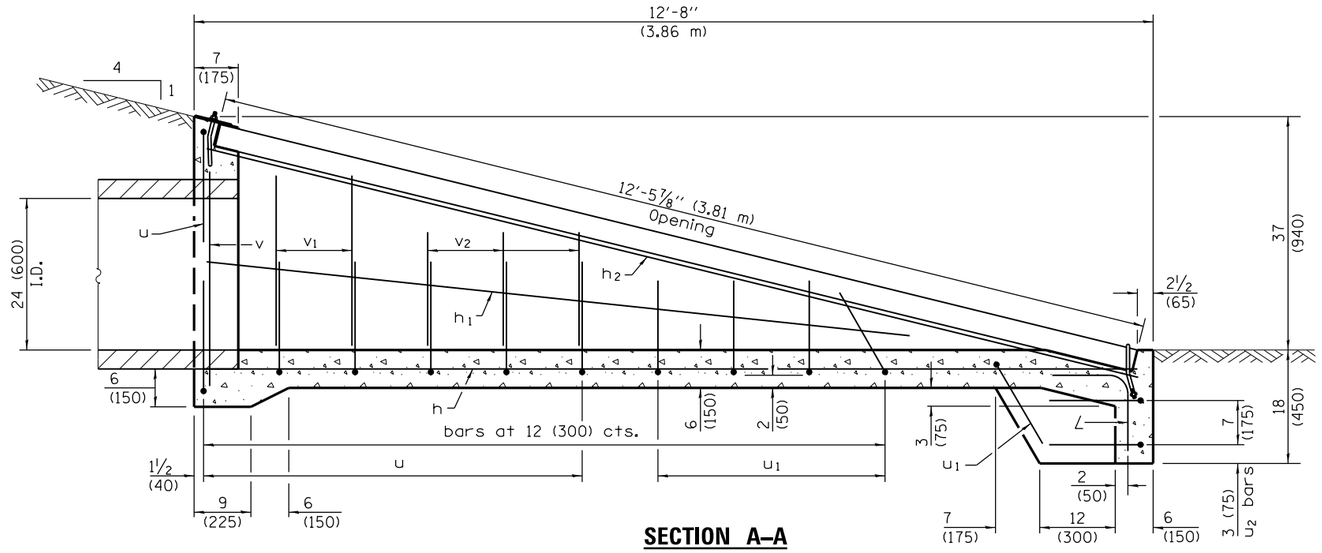


**SECTION A–A**

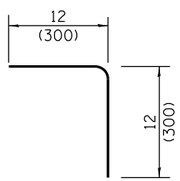


**Bar L**

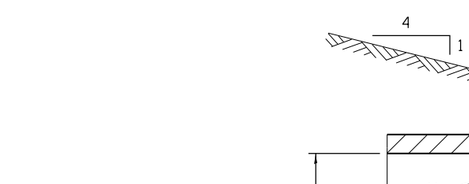


**Bars u, u1 & u2**

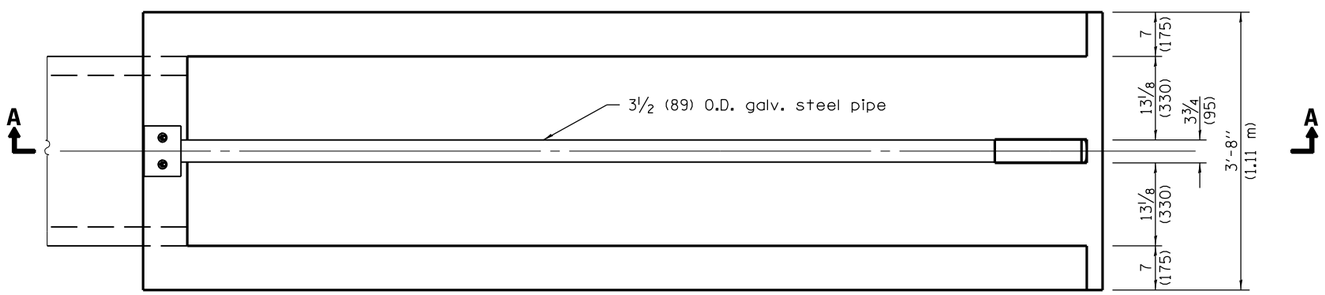


**PLAN**

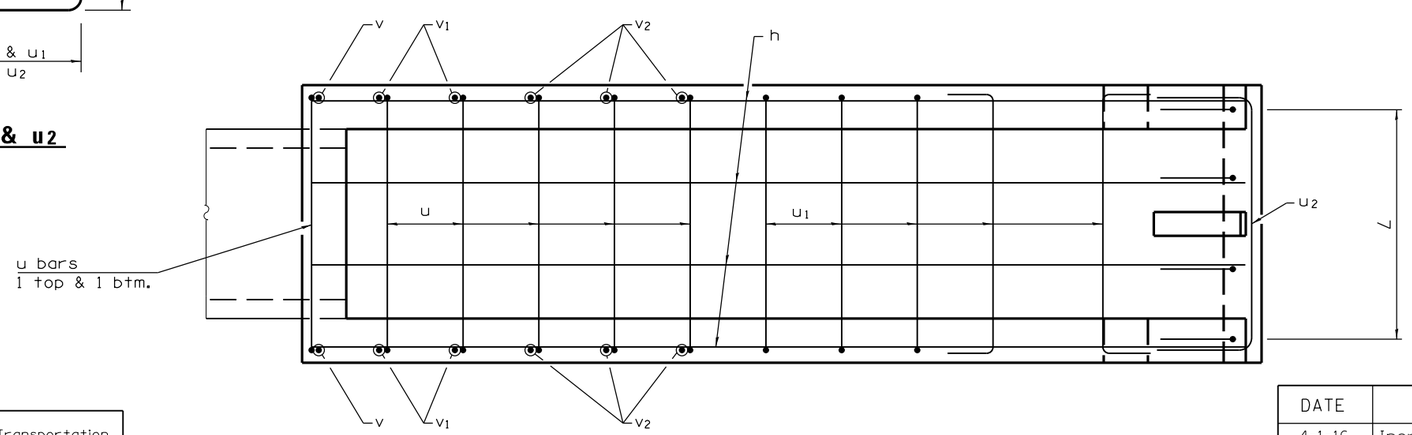


**PLAN OF REINFORCEMENT**

Material required for one inlet box

| Bar | Qty. | Size | Length |
|---|---|---|---|
| h | 4 | No. 4 (No. 13) | 12'-4" (3.76 m) |
| $h_1$ | 2 | No. 4 (No. 13) | 9'-4" (2.84 m) |
| $h_2$ | 2 | No. 4 (No. 13) | 12'-8" (3.86 m) |
| L | 4 | No. 4 (No. 13) | 2'-0" (0.60 m) |
| u | 7 | No. 4 (No. 13) | 6'-5" (1.95 m) |
| $u_1$ | 5 | No. 4 (No. 13) | 5'-11" (1.80 m) |
| $u_2$ | 2 | No. 4 (No. 13) | 5'-10" (1.75 m) |
| v | 2 | No. 4 (No. 13) | 34 (864) |
| $v_1$ | 4 | No. 4 (No. 13) | 27 (680) |
| $v_2$ | 6 | No. 4 (No. 13) | 18 (460) |
| Concrete | | cu. yds. ($m^3$) | 1.9 (1.5) |
| Reinf. Bars | | lbs. (kg) | 141 (64.0) |
| Galv. Steel Pipe | | 3½ (89) O.D. | 12'-5⅝" (3.80 m) |

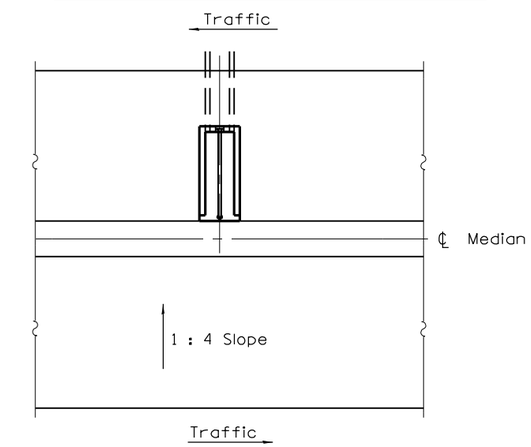


Sketch showing location and direction of box in relation to ℄ median.

## GENERAL NOTES

All slope ratios are expressed as units of vertical displacement to units of horizontal displacement (V:H).

All dimensions are in inches (millimeters) unless otherwise shown.

Illinois Department of Transportation

PASSED April 1, 2016
Michael Brand
ENGINEER OF POLICY AND PROCEDURES
APPROVED April 1, 2016
ENGINEER OF DESIGN AND ENVIRONMENT

ISSUED 1-1-97

| DATE | REVISIONS |
|---|---|
| 4-1-16 | Increased length of inlet |
| | box to provide clearance |
| | for top u-bolt. |
| 1-1-09 | Switched units to |
| | English (metric). |

# INLET BOX
# TYPE 24 (600) B

(Sheet 1 of 2)

**STANDARD 542506–03**

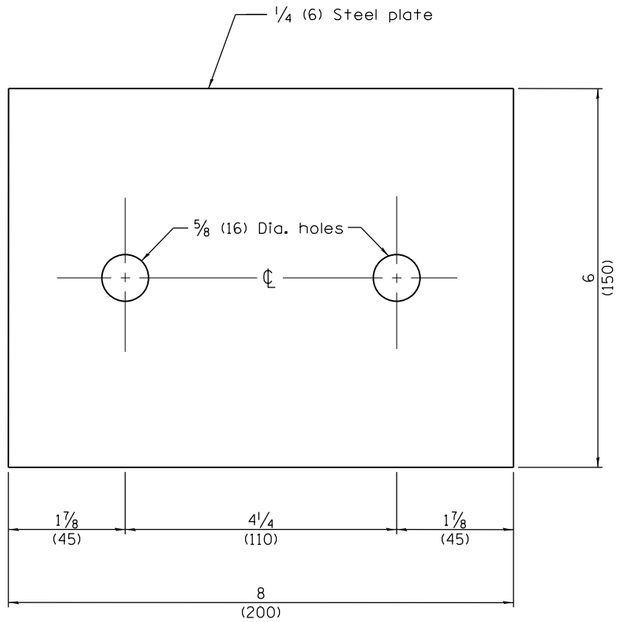


**TOP ANCHOR PLATE**
(1 - required)

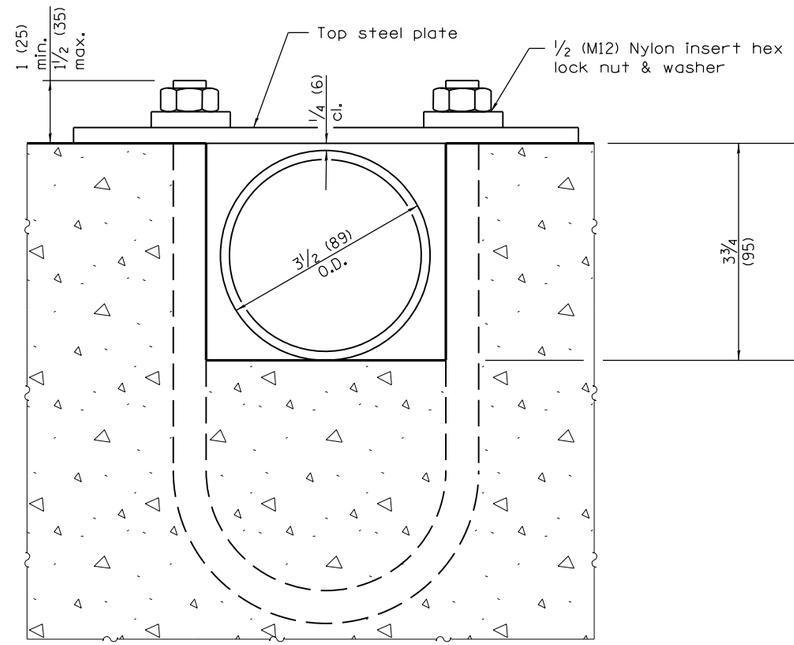


**SECTION B–B**

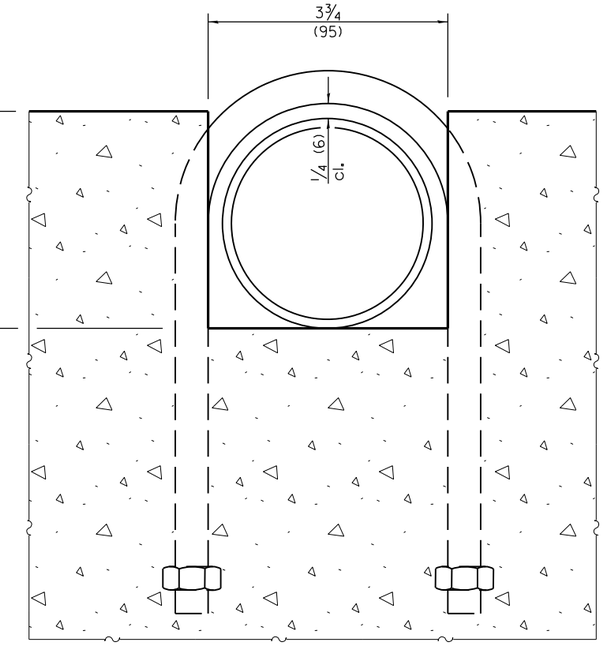


**SECTION C–C**

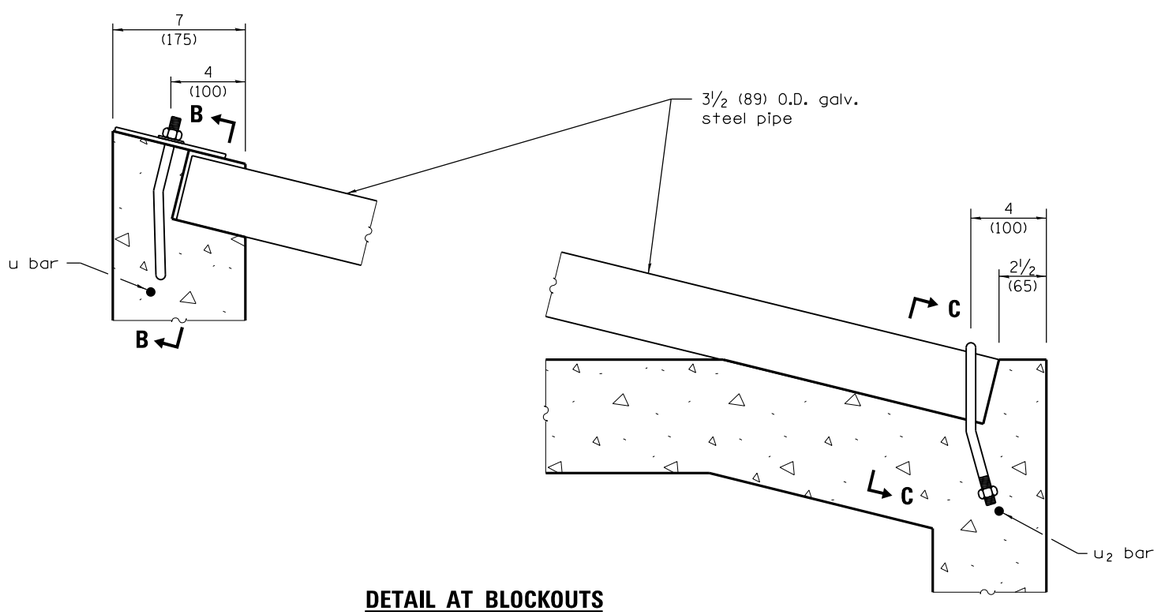


**DETAIL AT BLOCKOUTS**

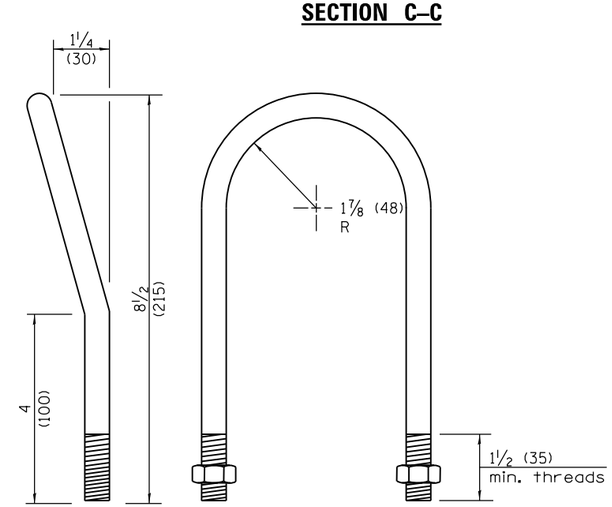


**1/2 (M12) U BOLT**
(2 - required)

Illinois Department of Transportation

PASSED April 1, 2016
Michael Brand
ENGINEER OF POLICY AND PROCEDURES
APPROVED April 1, 2016
ENGINEER OF DESIGN AND ENVIRONMENT

ISSUED 1-1-97

# INLET BOX
# TYPE 24 (600) B

(Sheet 2 of 2)

**STANDARD 542506–03**

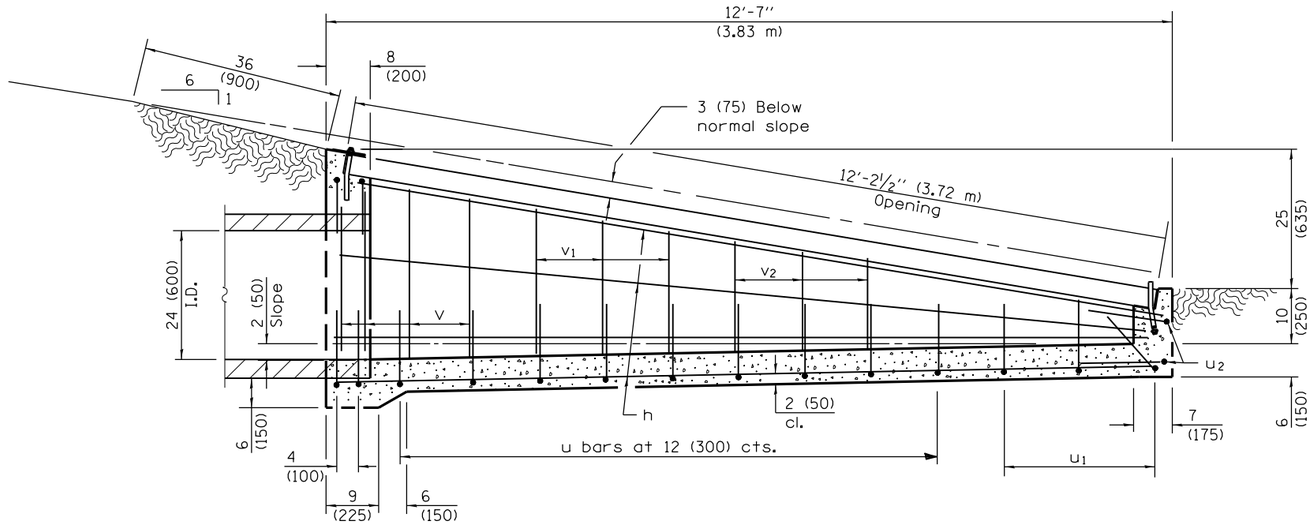


## SECTION A–A

Material required for one inlet box

| Bar | Qty. | Size | Length |
|---|---|---|---|
| h | 10 | No. 4 (No. 13) | 12'-0" (3.65 m) |
| u | 13 | No. 4 (No. 13) | 6'-5" (1.95 m) |
| $u_1$ | 3 | No. 4 (No. 13) | 5'-11" (1.80 m) |
| $u_2$ | 2 | No. 4 (No. 13) | 5'-10" (1.75 m) |
| v | 8 | No. 4 (No. 13) | 30 (760) |
| $v_1$ | 6 | No. 4 (No. 13) | 24 (610) |
| $v_2$ | 6 | No. 4 (No. 13) | 18 (460) |
| Concrete | | cu. yds. ($m^3$) | 1.9 (1.45) |
| Reinf. Bars | | lbs. (kg) | 83 (183) |
| Galv. Steel Pipe | | 3½ (89) O.D. | 12'-2¼" (3.71 m) |

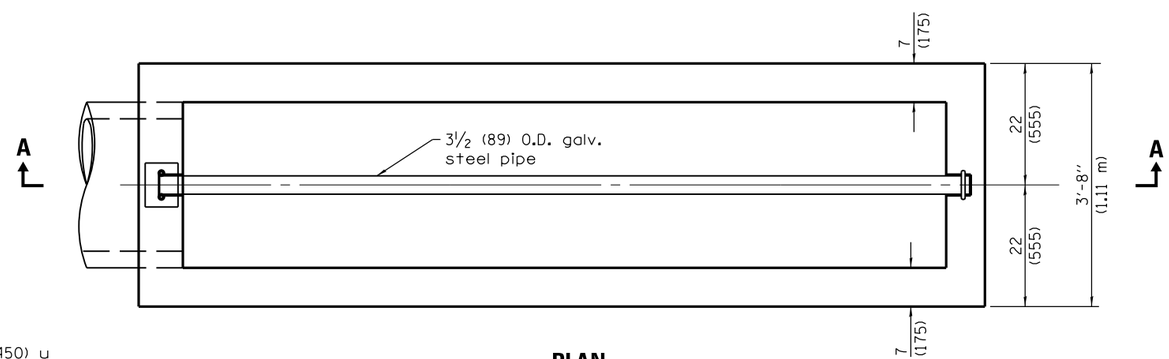


## PLAN

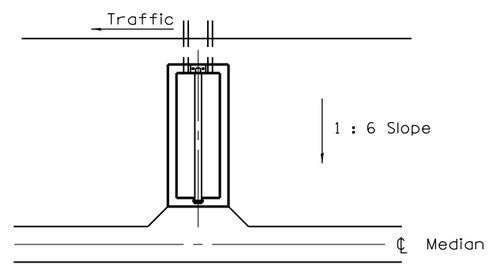


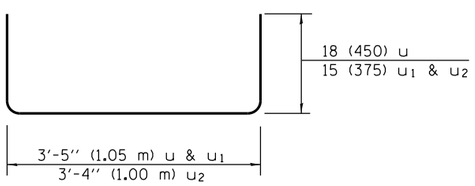


## Bars u, u1 & u2

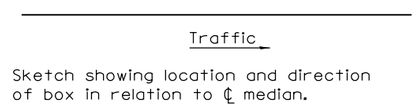


Sketch showing location and direction of box in relation to ℄ median.

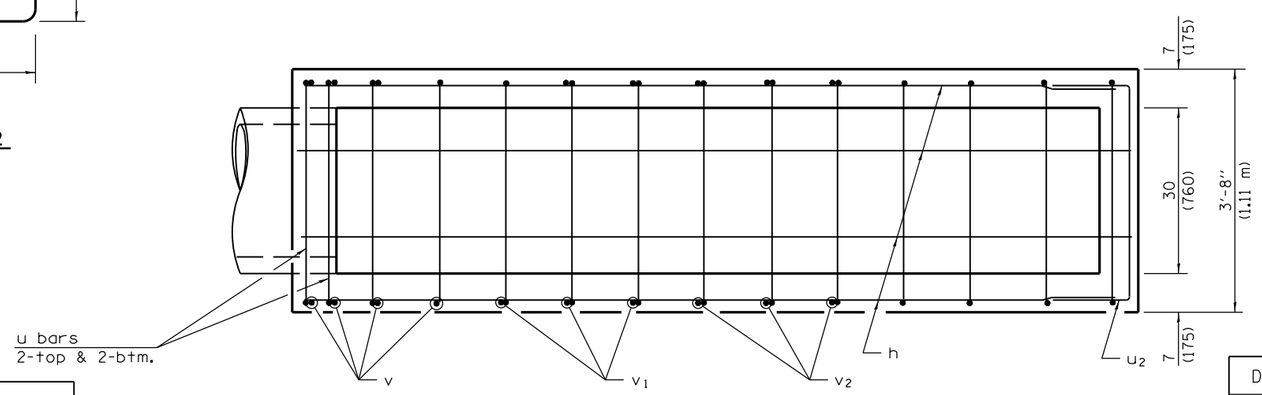


## PLAN OF REINFORCEMENT

## GENERAL NOTES

All slope ratios are expressed as units of vertical displacement to units of horizontal displacement (V:H).

All dimensions are in inches (millimeters) unless otherwise shown.

Illinois Department of Transportation

PASSED January 1, 2009
ENGINEER OF POLICY AND PROCEDURES
APPROVED January 1, 2009
ENGINEER OF DESIGN AND ENVIRONMENT

ISSUED 1-1-07

| DATE | REVISIONS |
|---|---|
| 1-1-09 | Switched units to English (metric). |
| 1-1-07 | Soft converted metric reinforcement bars. |

# INLET BOX TYPE 24 (600) C

(Sheet 1 of 2)

STANDARD 542511–02

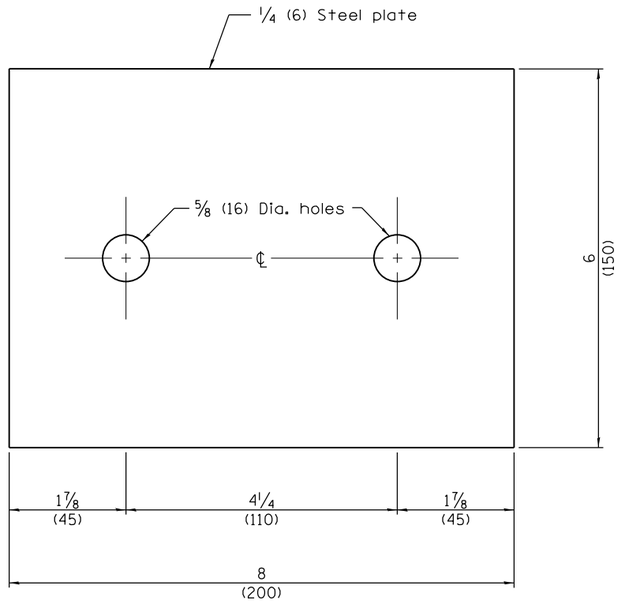


**TOP ANCHOR PLATE**

(1 - required)

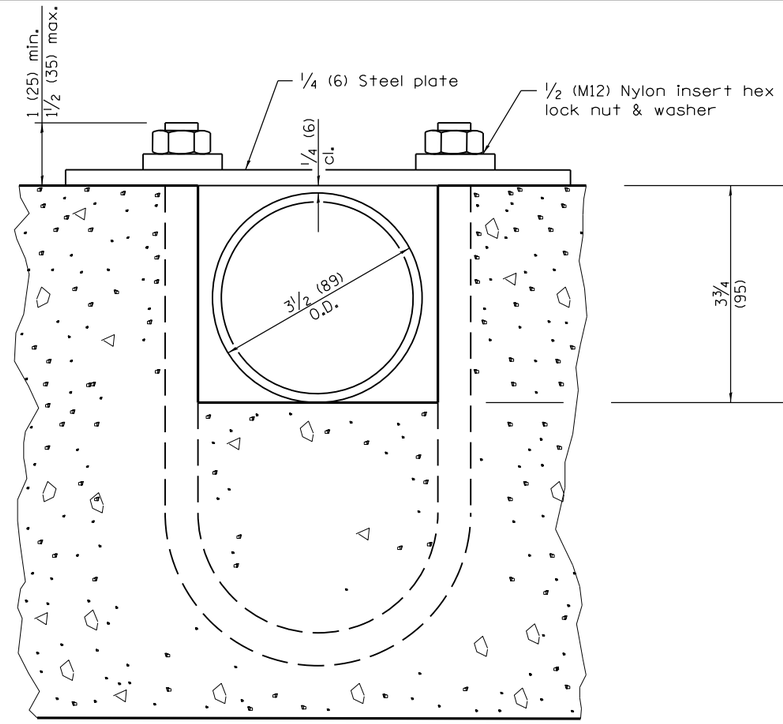


**SECTION B–B**

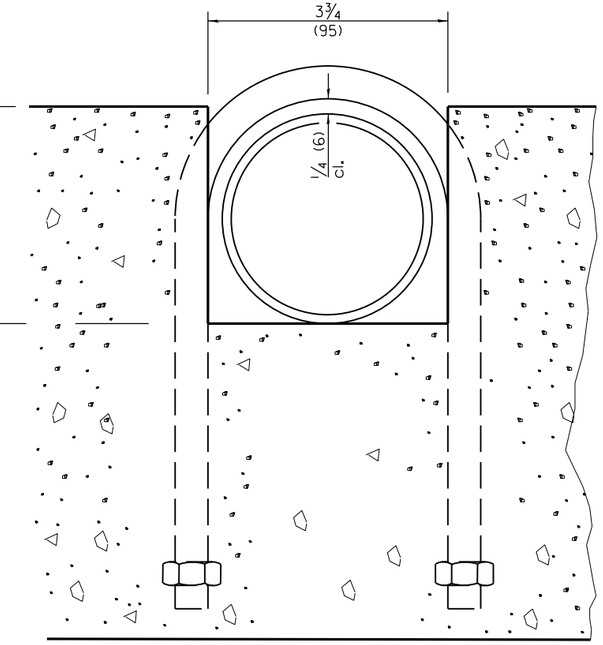


**SECTION C–C**

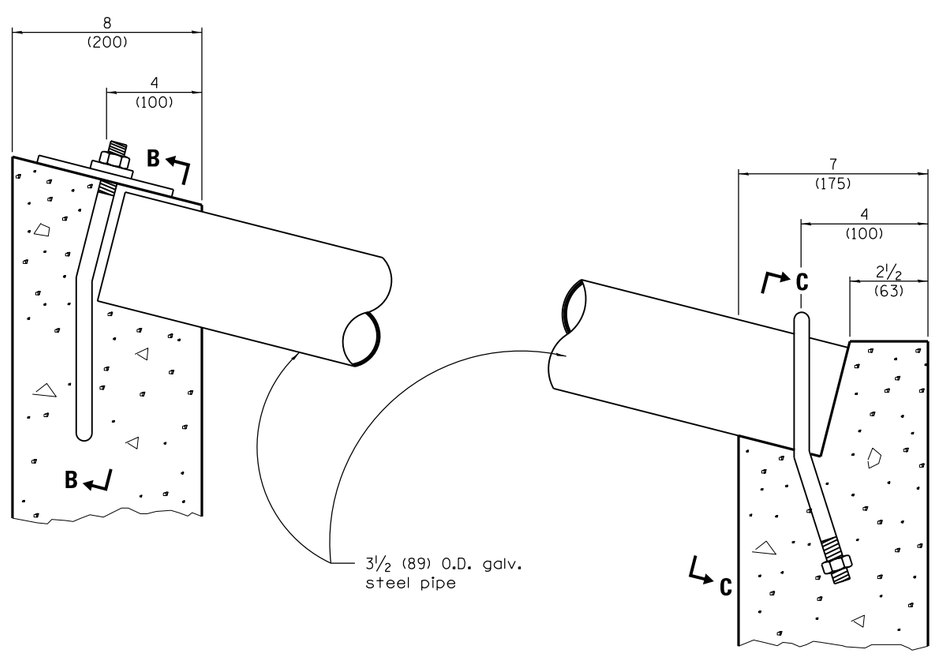


**DETAIL AT BLOCKOUTS**

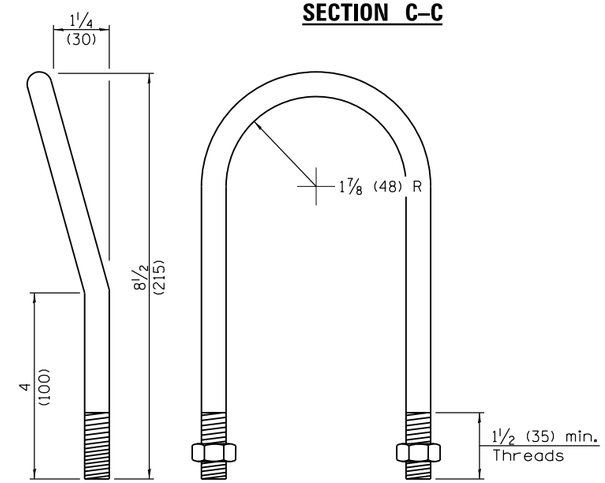


**1/2 (M12) U BOLT**

(2 - required)

Illinois Department of Transportation

PASSED January 1, 2009

ENGINEER OF POLICY AND PROCEDURES

APPROVED January 1, 2009

ENGINEER OF DESIGN AND ENVIRONMENT

ISSUED 1-1-97

# INLET BOX
# TYPE 24 (600) C

(Sheet 2 of 2)

**STANDARD 542511–02**

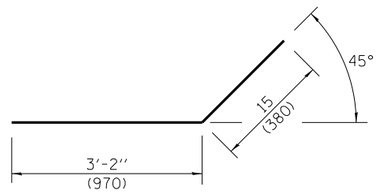


**Bar h1**

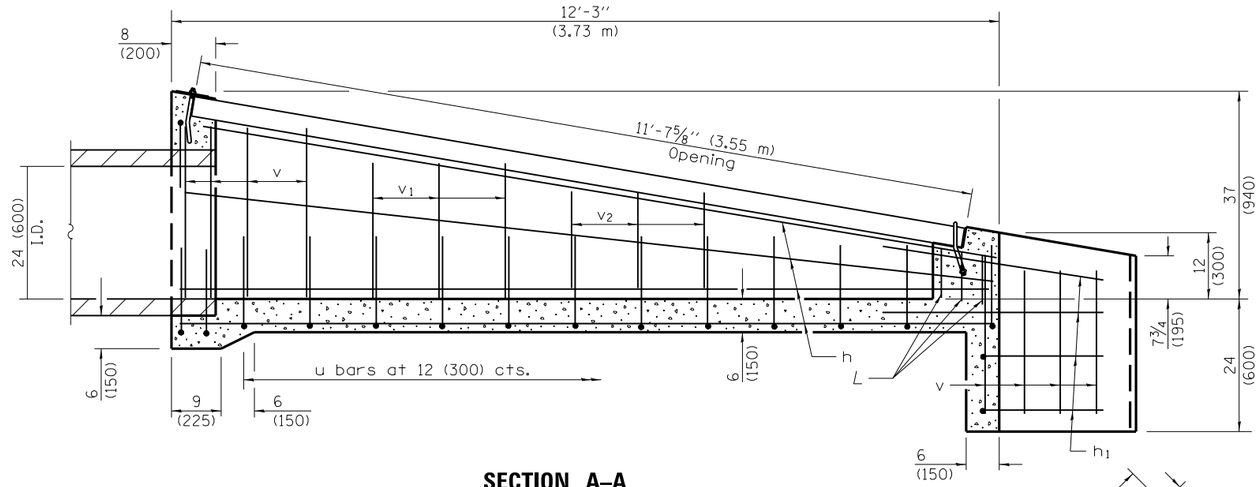


**SECTION A–A**

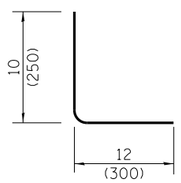


**Bar L**

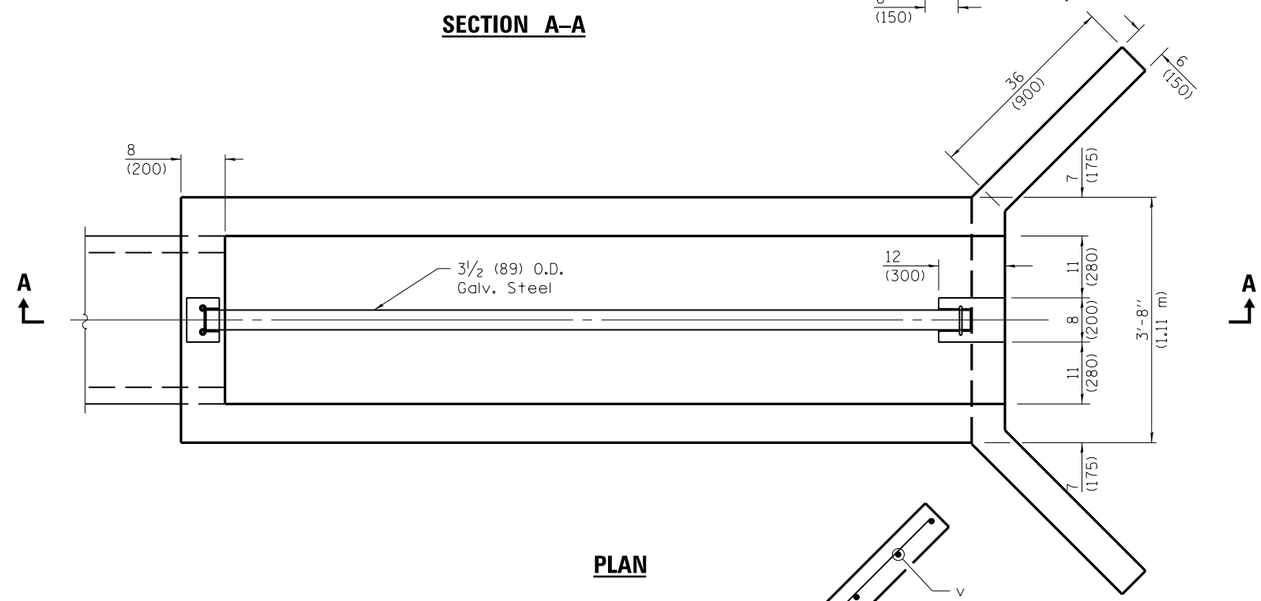


**PLAN**

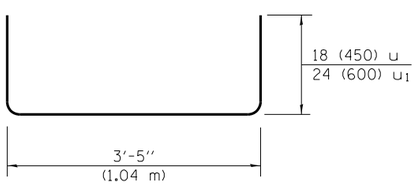


**Bar u & u1**

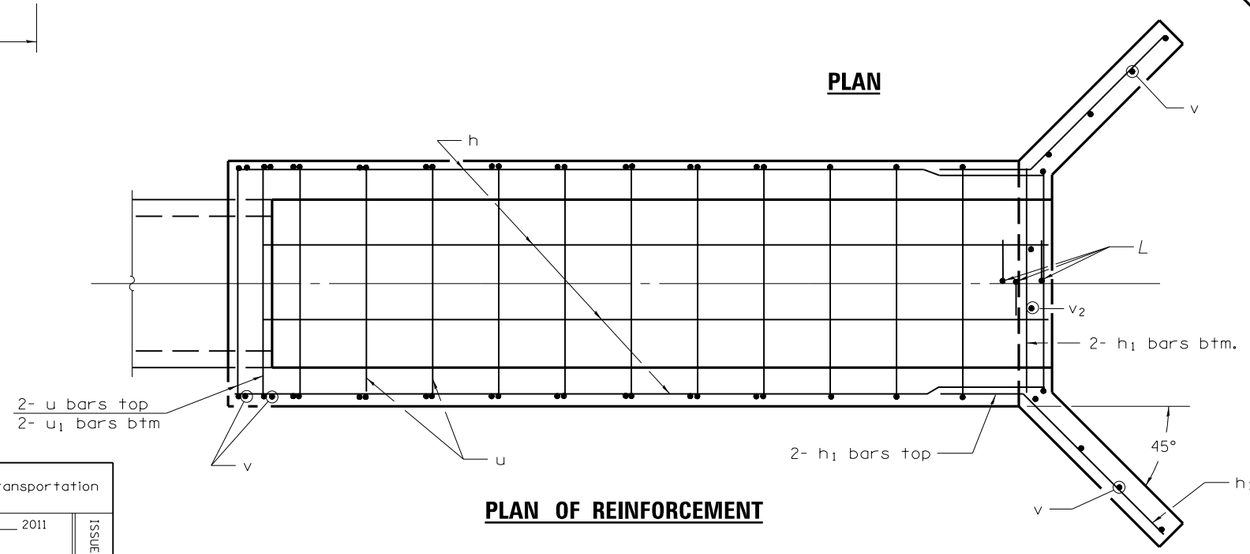


**PLAN OF REINFORCEMENT**

Material required for one inlet box

| Bar | Qty. | Size | Length |
|---|---|---|---|
| h | 10 | No. 4 (No. 13) | 12′-0″ (3.66 m) |
| $h_1$ | 8 | No. 4 (No. 13) | 4′-5″ (1.35 m) |
| L | 3 | No. 4 (No. 13) | 22 (550) |
| u | 14 | No. 4 (No. 13) | 6′-5″ (1.94 m) |
| $u_1$ | 2 | No. 4 (No. 13) | 7′-5″ (2.24 m) |
| v | 16 | No. 4 (No. 13) | 30 (760) |
| $v_1$ | 6 | No. 4 (No. 13) | 24 (610) |
| $v_2$ | 8 | No. 4 (No. 13) | 18 (460) |
| Concrete | | cu. yds. ($m^3$) | 2.2 (1.68) |
| Reinf. Bars | | lbs. (kg) | 220 (99.8) |
| Galv. Steel Pipe | | 3½ (89) O.D. | 11′-7⅜″ (3.55 m) |

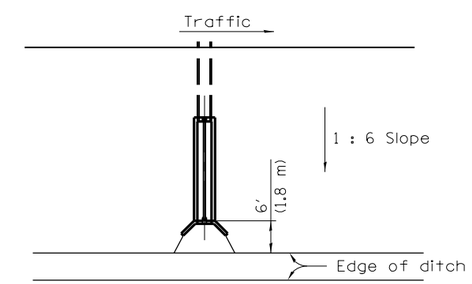


Sketch showing location and direction of box in relation to ditch.

## GENERAL NOTES

All slope ratios are expressed as units of vertical displacement to units of horizontal displacement (V:H).

All dimensions are in inches (millimeters) unless otherwise shown.

Illinois Department of Transportation

PASSED January 1, 2011
Michael Brand
ENGINEER OF POLICY AND PROCEDURES
APPROVED January 1, 2011
Scott E. Stokes
ENGINEER OF DESIGN AND ENVIRONMENT

ISSUED 1-1-97

| DATE | REVISIONS |
|---|---|
| 1-1-11 | Corrected two bars in |
| | weir to '$v_2$'. |
| | |
| 1-1-09 | Switched units to |
| | English (metric). |
| | |

# INLET BOX
# TYPE 24 (600) D

(Sheet 1 of 2)

**STANDARD 542516–03**

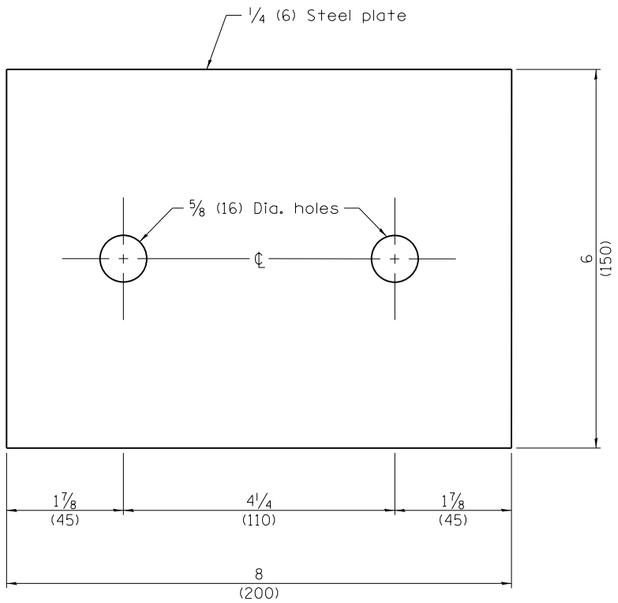


**TOP ANCHOR PLATE**
(1-required)

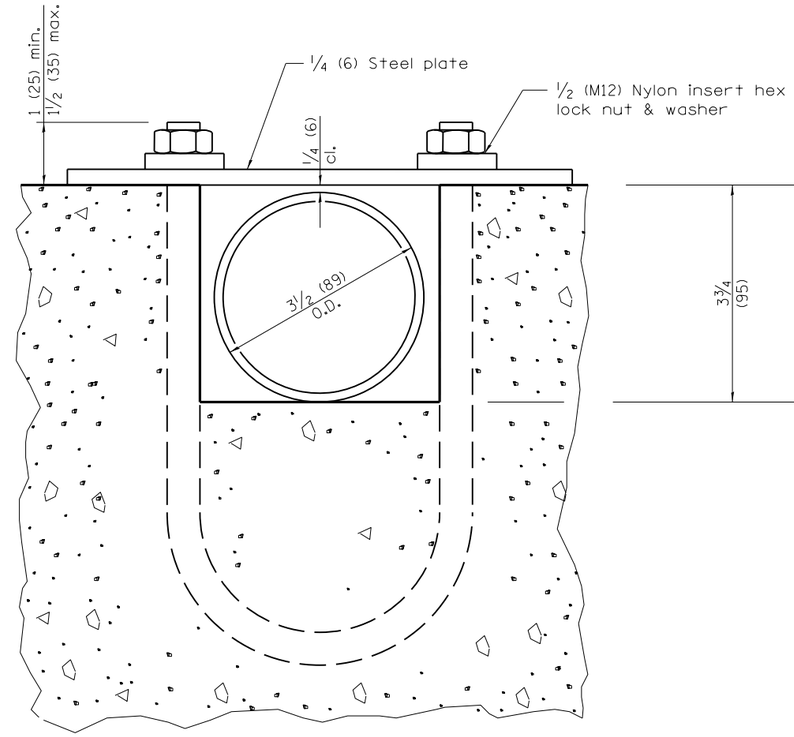


**SECTION B–B**

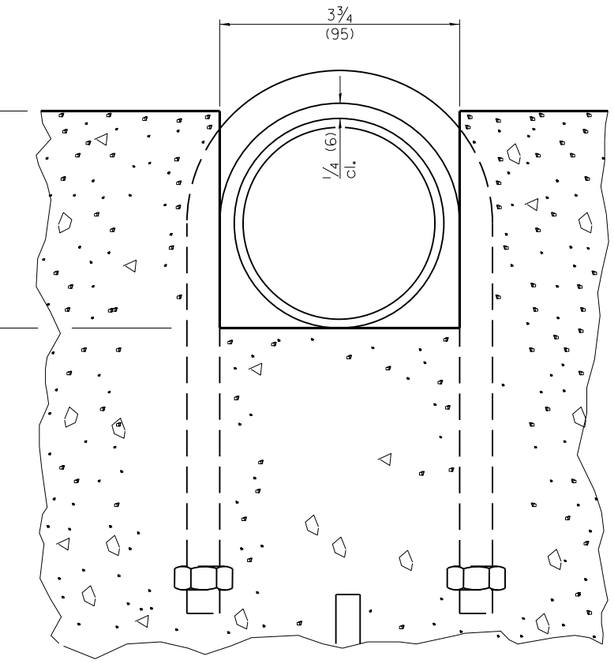


**SECTION C–C**

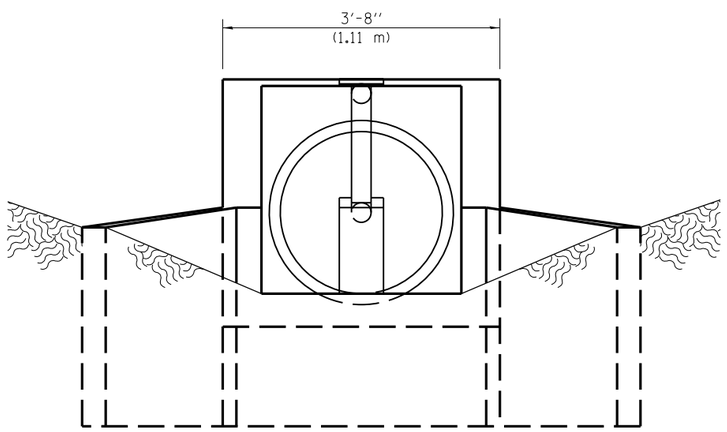


**END VIEW**

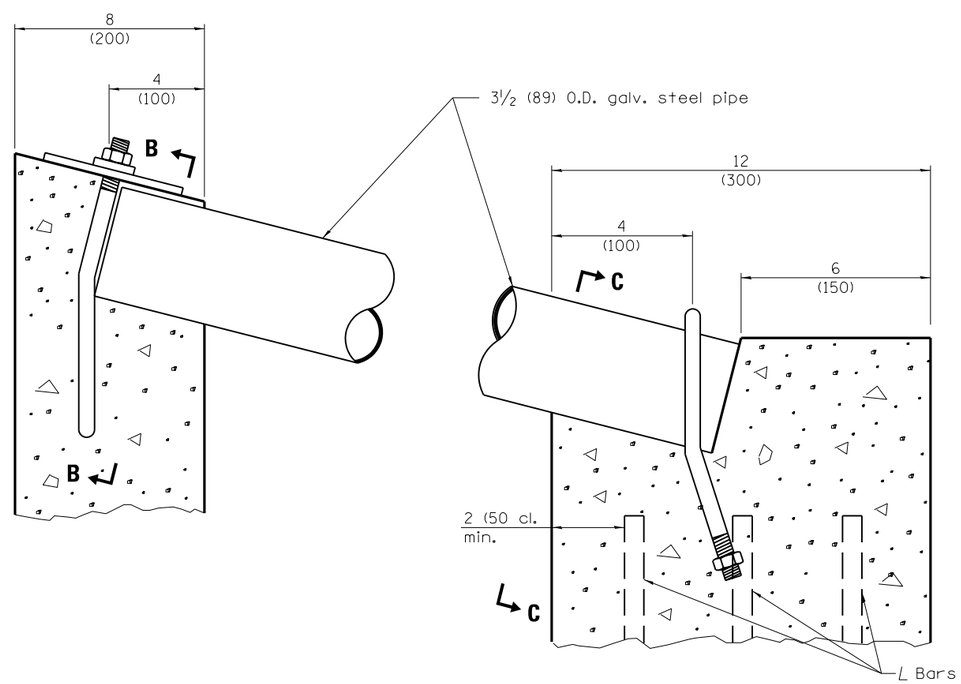


**DETAIL AT BLOCKOUTS**

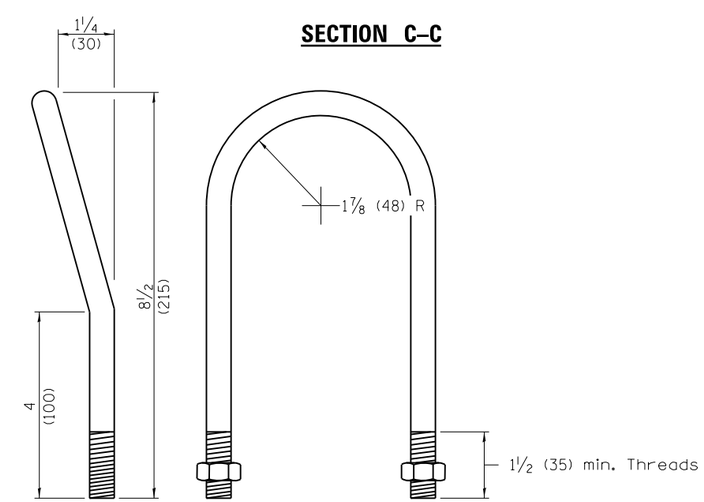


**1/2 (M12) U BOLT**
(2-required)

Illinois Department of Transportation

PASSED January 1, 2011
Michael Brand
ENGINEER OF POLICY AND PROCEDURES
APPROVED January 1, 2011
ENGINEER OF DESIGN AND ENVIRONMENT

ISSUED 1-1-97

# INLET BOX
# TYPE 24 (600) D

(Sheet 2 of 2)

**STANDARD 542516–03**

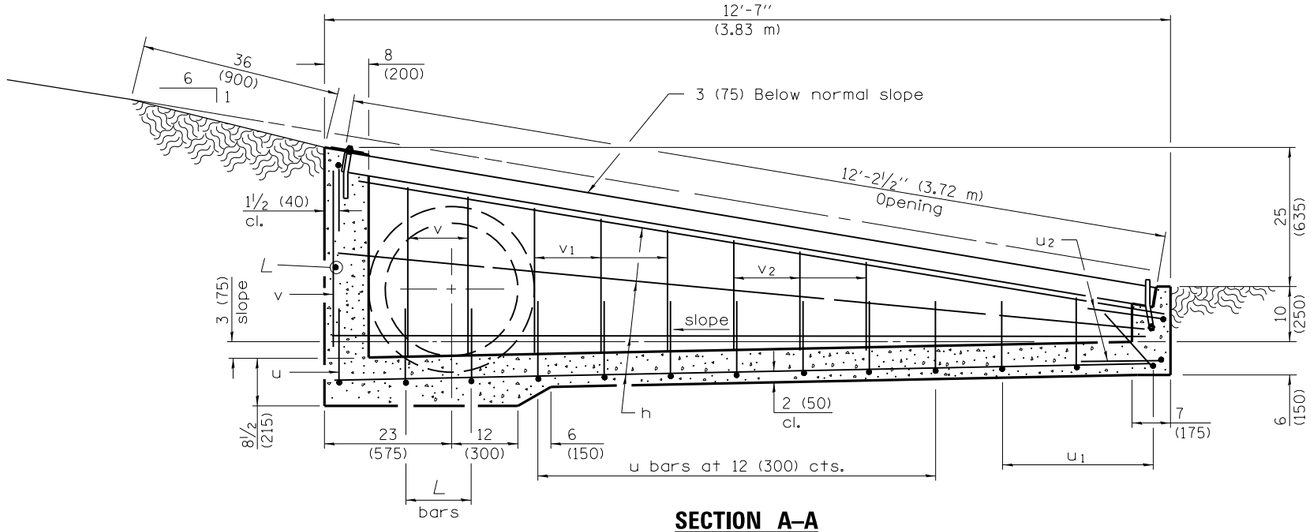


## SECTION A–A

Material required for one inlet box

| Bar | Qty. | Size | Length |
|---|---|---|---|
| h | 8 | No. 4 (No. 13) | 12'-0" (3.66 m) |
| $h_1$ | 2 | No. 4 (No. 13) | 9'-0" (2.75 m) |
| L | 5 | No. 4 (No. 13) | 5'-0" (1.50 m) |
| u | 9 | No. 4 (No. 13) | 6'-5" (1.95 m) |
| $u_1$ | 3 | No. 4 (No. 13) | 5'-11" (1.80 m) |
| $u_2$ | 2 | No. 4 (No. 13) | 5'-10" (1.75 m) |
| v | 6 | No. 4 (No. 13) | 30 (760) |
| $v_1$ | 6 | No. 4 (No. 13) | 24 (610) |
| $v_2$ | 6 | No. 4 (No. 13) | 18 (460) |
| Concrete | | cu. yds. ($m^3$) | 2.0 (1.5) |
| Reinforcement Bars | | lbs. (kg) | 175 (79.4) |
| Galv. Steel Pipe | | 3½ (89) O.D. | 12'-2¼" (3.71 m) |

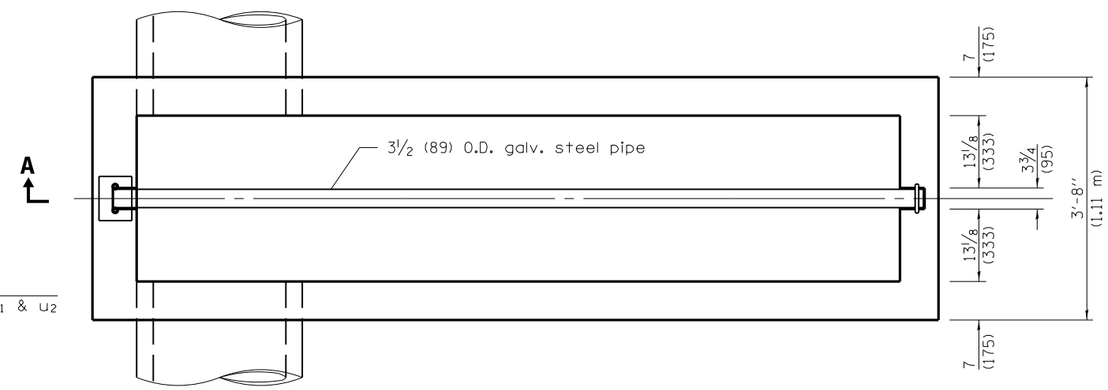


## PLAN

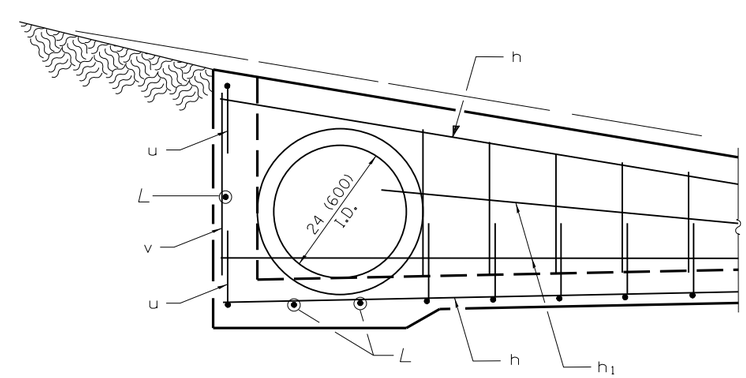


## SECTION B–B

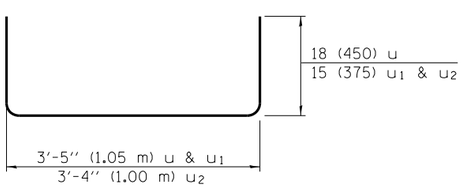


## Bars u, u1 & u2

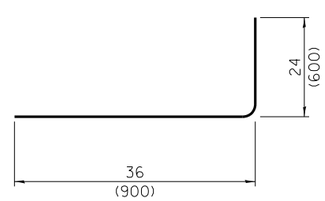


## Bar L

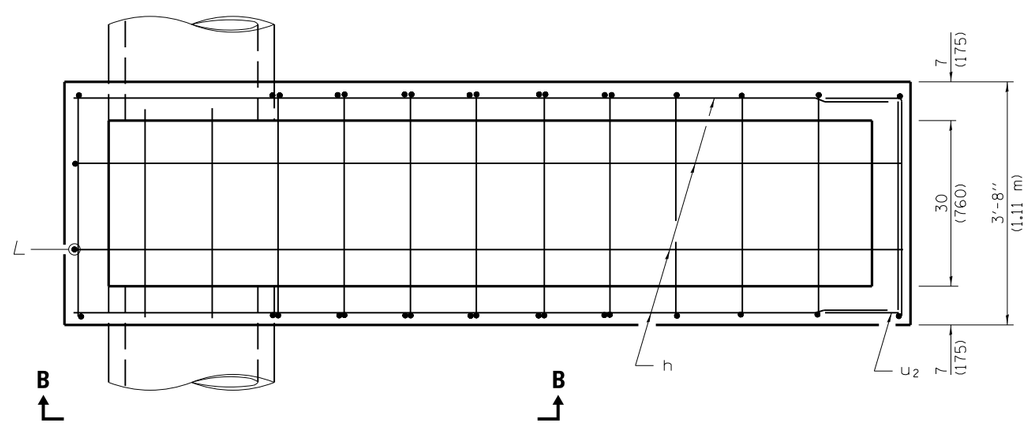


## PLAN OF REINFORCEMENT

## GENERAL NOTES

All slope ratios are expressed as units of vertical displacement to units of horizontal displacement (V:H).

All dimensions are in inches (millimeters) unless otherwise shown.

Illinois Department of Transportation

PASSED January 1, 2009
ENGINEER OF POLICY AND PROCEDURES
APPROVED January 1, 2009
ENGINEER OF DESIGN AND ENVIRONMENT

ISSUED 1-1-07

| DATE | REVISIONS |
|---|---|
| 1-1-09 | Switched units to |
| | English (metric). |
| | |
| 1-1-07 | Soft converted metric |
| | reinforcement bars. |
| | |

# INLET BOX
# TYPE 24 (600) E

(Sheet 1 of 2)

STANDARD 542521–02

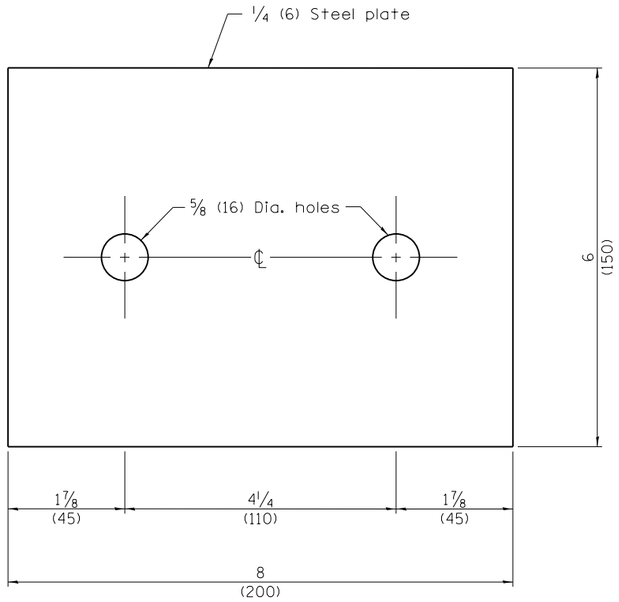


**TOP ANCHOR PLATE**
(1 - required)

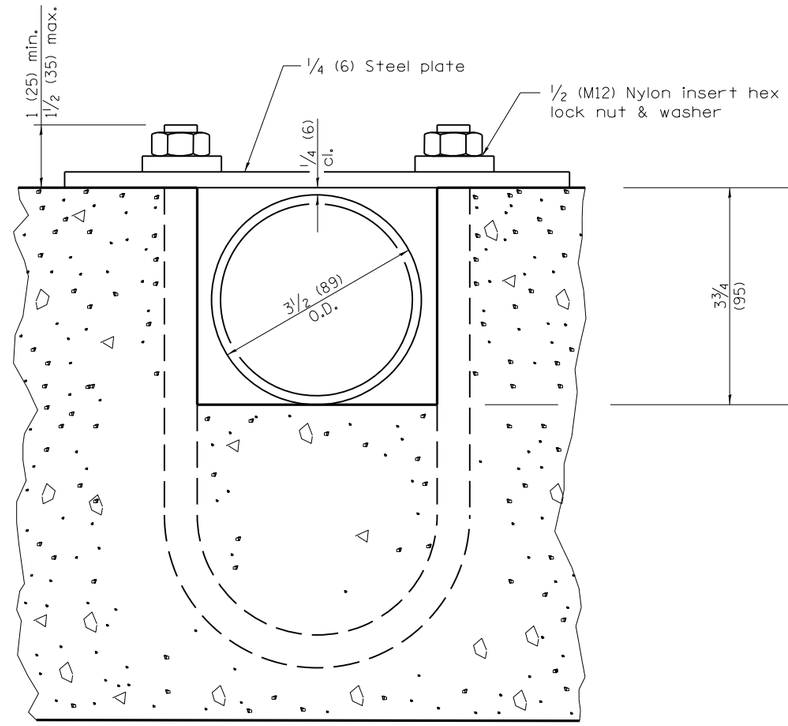


**SECTION D–D**

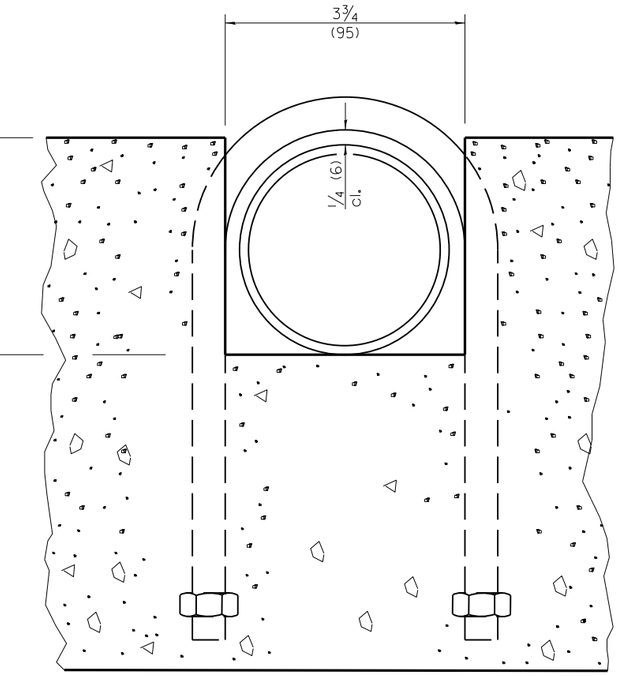


**SECTION C–C**

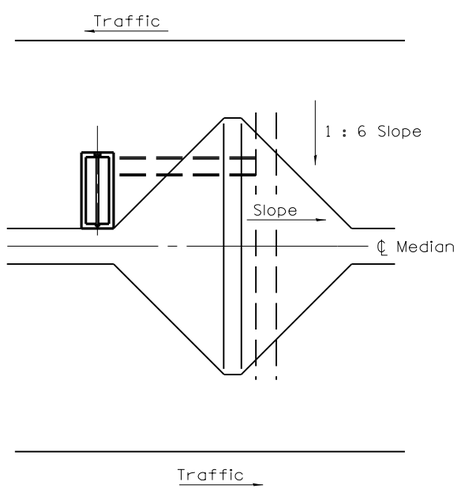


Sketch showing location and direction of box in relation to ℄ median.

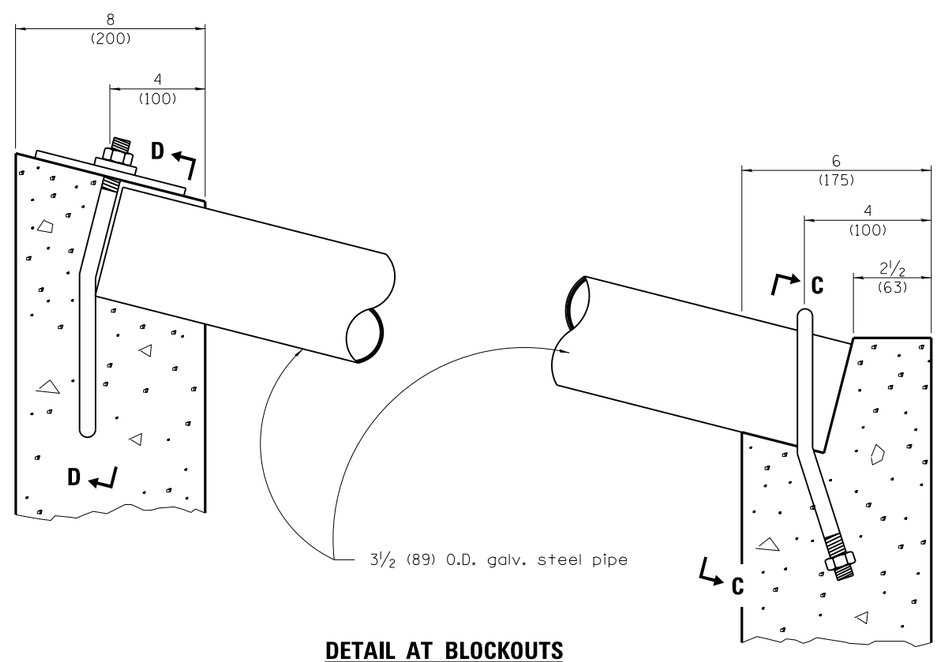


**DETAIL AT BLOCKOUTS**

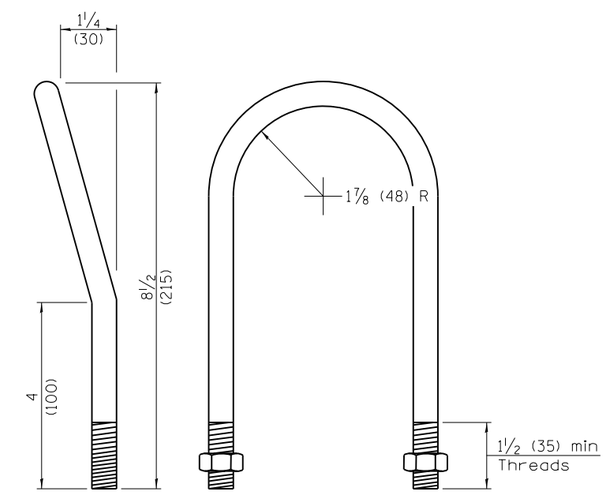


**1/2 (M12) U BOLT**
(2- required)

Illinois Department of Transportation

PASSED January 1, 2009
ENGINEER OF POLICY AND PROCEDURES
APPROVED January 1, 2009
ENGINEER OF DESIGN AND ENVIRONMENT

ISSUED 1-1-97

# INLET BOX
# TYPE 24 (600) E

(Sheet 2 of 2)

**STANDARD 542521–02**

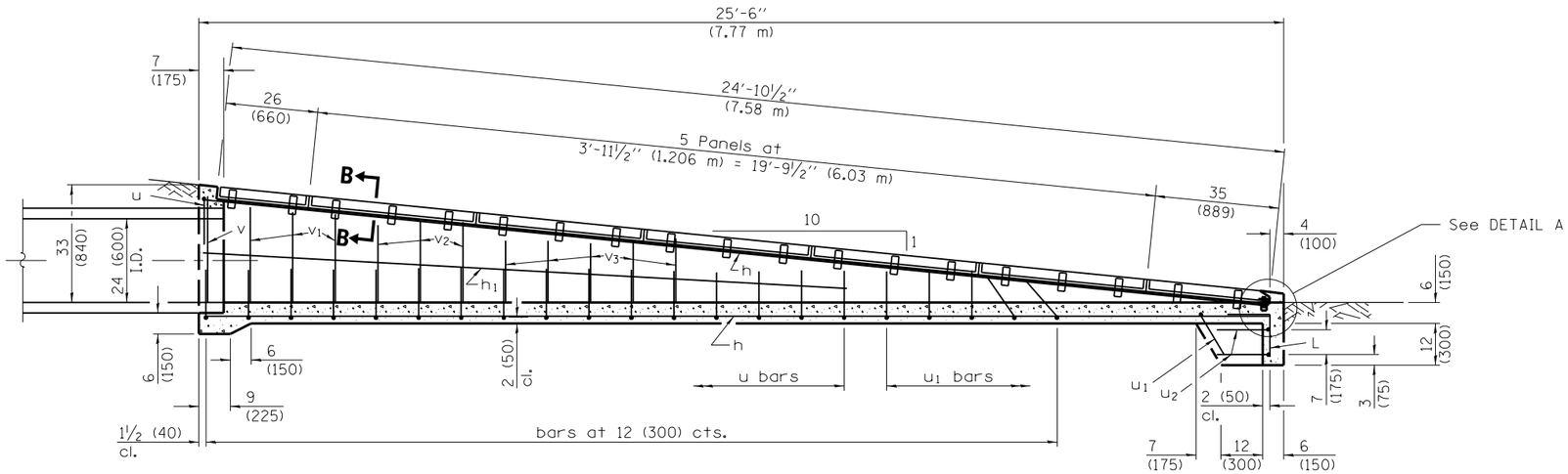


## SECTION A–A

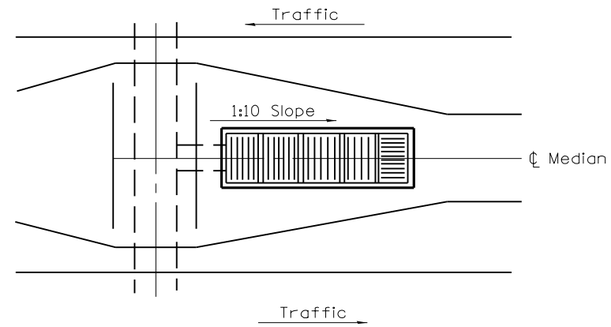


Sketch showing location and direction of main bearing bars in relation to ℄ median

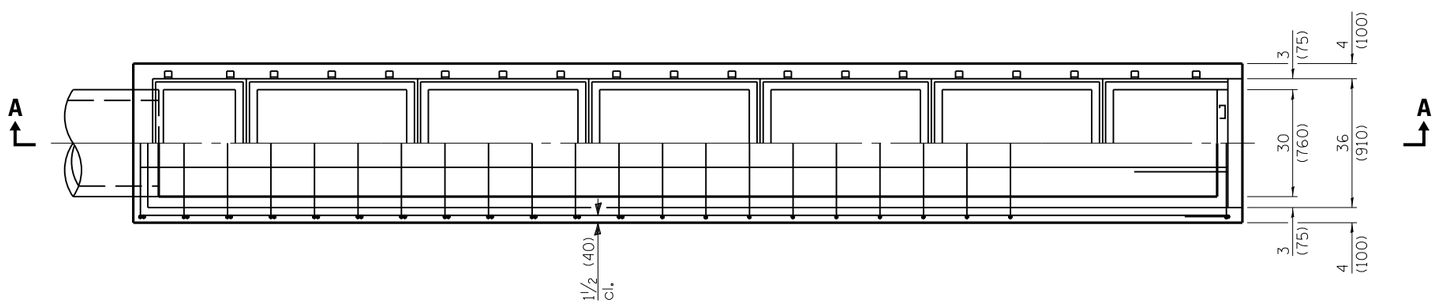


## PLAN

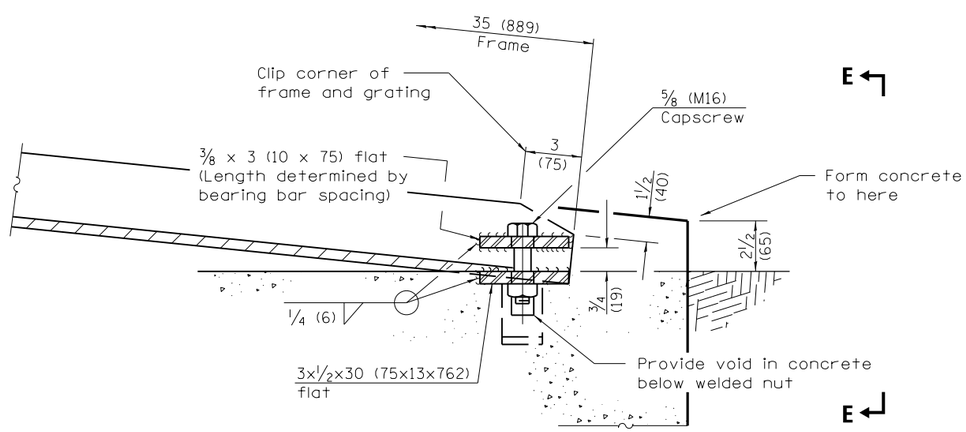


## DETAIL A

## GENERAL NOTES

If field conditions permit, the bottom of the inlet box shall have a 2 (50) slope.

All slope ratios are expressed as units of vertical displacement to units of horizontal displacement (V:H).

All dimensions are in inches (millimeters) unless otherwise shown.

Illinois Department of Transportation

PASSED January 1, 2011
Michael Brand
ENGINEER OF POLICY AND PROCEDURES

APPROVED January 1, 2011
ENGINEER OF DESIGN AND ENVIRONMENT

ISSUED 1-1-97

| DATE | REVISIONS |
|---|---|
| 1-1-11 | Corrected weld symbols |
| | on Sheet 2. |
| | |
| 1-1-09 | Switched units to |
| | English (metric). Revised |
| | General Notes. |

# INLET BOX
# TYPE 24 (600) F

(Sheet 1 of 2)

**STANDARD 542526–03**

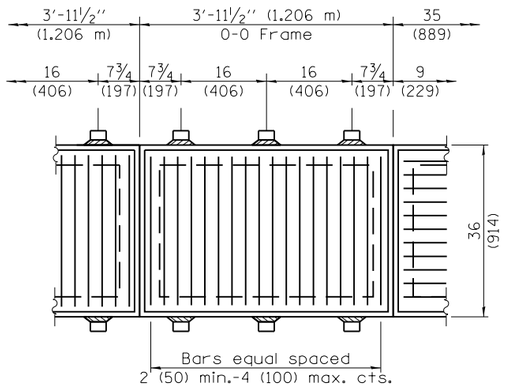


**TYPICAL STEEL GRATING**

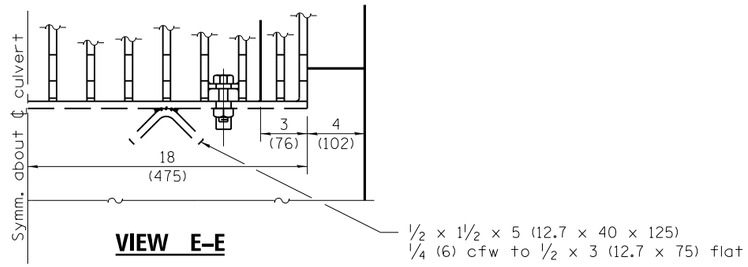


**VIEW E–E**

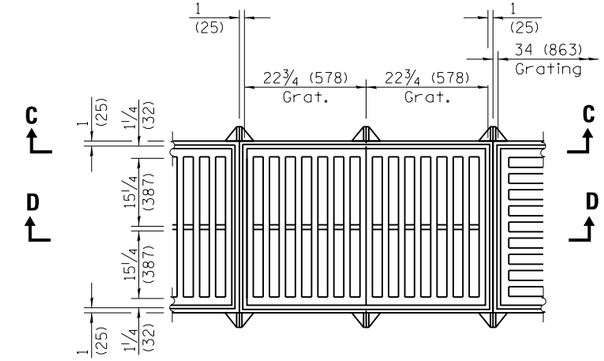


**TYPICAL CAST GRATING**

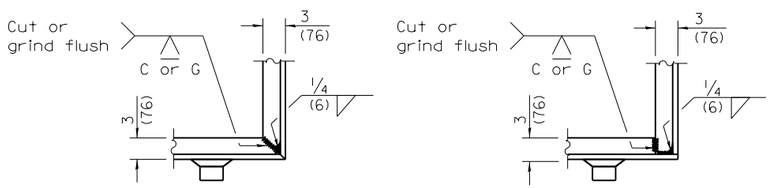


**TYPICAL CORNER OF STEEL GRATING FRAME**

Material Required for One Inlet Box

| Bar | No. | Size | Length |
|---|---|---|---|
| h | 6 | No. 4 (No. 13) | 25'-0" (7.62 m) |
| $h_1$ | 2 | No. 4 (No. 13) | 11'-0" (3.35 m) |
| L | 4 | No. 4 (No. 13) | 24 (600) |
| u | 17 | No. 4 (No. 13) | 6'-5" (1.96 m) |
| $u_1$ | 6 | No. 4 (No. 13) | 5'-11" (1.80 m) |
| $u_2$ | 2 | No. 4 (No. 13) | 5'-10" (1.78 m) |
| v | 2 | No. 4 (No. 13) | 30 (760) |
| $v_1$ | 6 | No. 4 (No. 13) | 27 (690) |
| $v_2$ | 6 | No. 4 (No. 13) | 24 (610) |
| $v_3$ | 10 | No. 4 (No. 13) | 18 (460) |
| Concrete | | cu. yds. ($m^3$) | 3.4 (2.6) |
| Reinf. Bars | | lbs. (kg) | 250 (113) |
| Grating | | (sq. ft.) ($m^2$) | 70.4 (6.54) |

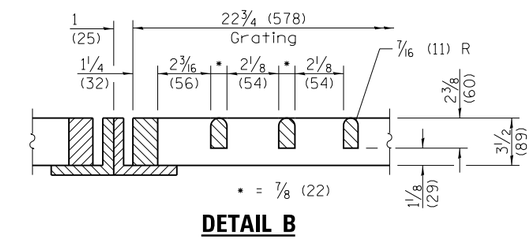


**DETAIL B**

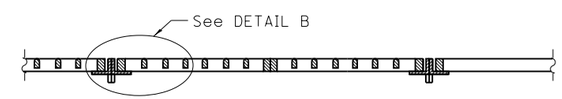


**SECTION C–C**

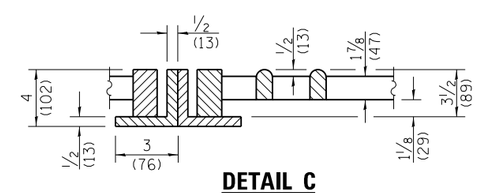


**DETAIL C**

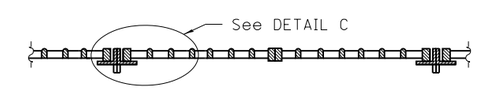


**SECTION D–D**

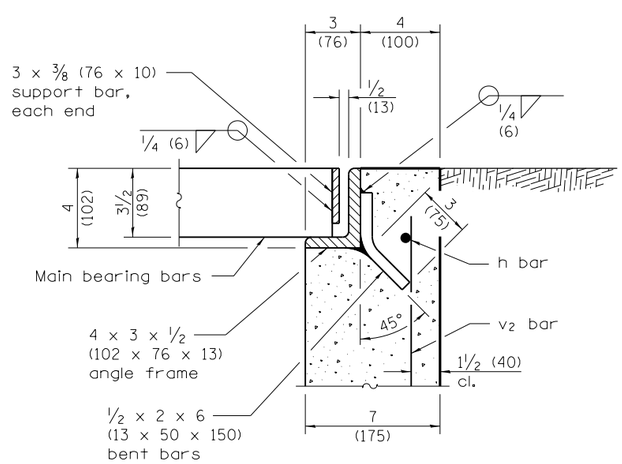


**SECTION B–B**

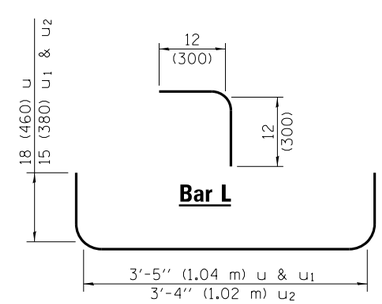


**Bar L**

**BARS u, $u_1$ & $u_2$**

Illinois Department of Transportation

PASSED January 1, 2011
Michael Brand
ENGINEER OF POLICY AND PROCEDURES

APPROVED January 1, 2011
ENGINEER OF DESIGN AND ENVIRONMENT

ISSUED 1-1-97

# INLET BOX
# TYPE 24 (600) F

(Sheet 2 of 2)

**STANDARD 542526–03**

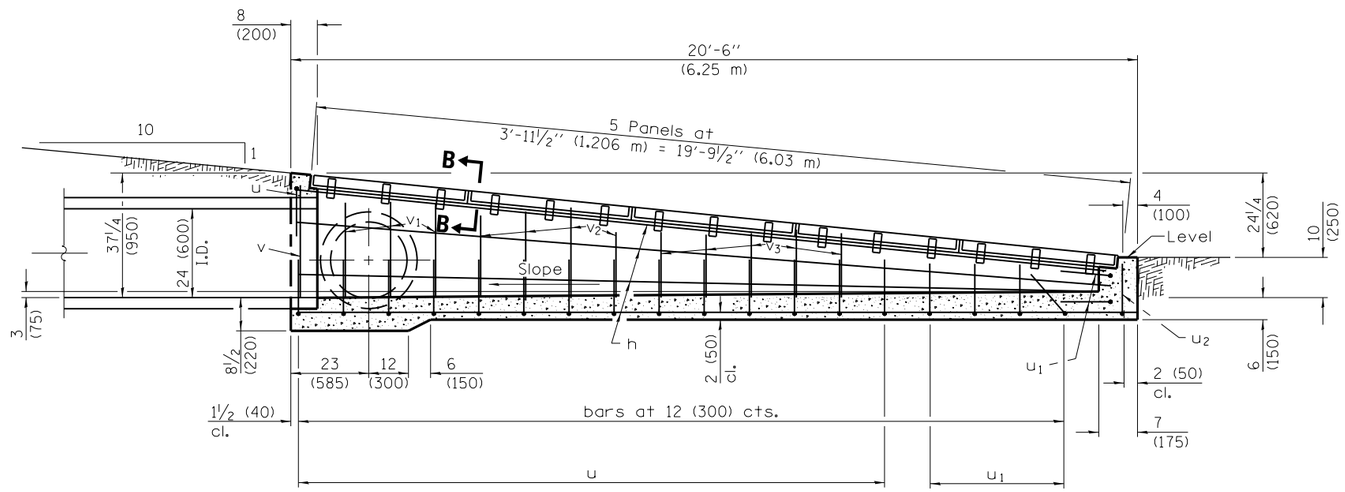


## SECTION A–A

NOTE:
Culvert pipe may exit from the side (or sides) by changing reinforcement bars in that area and in the headwall end of box.

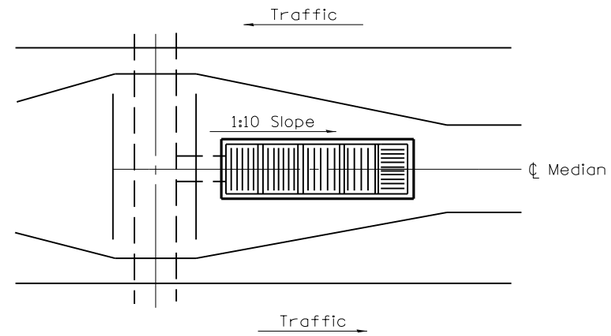


Sketch showing location and direction of main bearing bars in relation to ℄ median (showing exit from end)

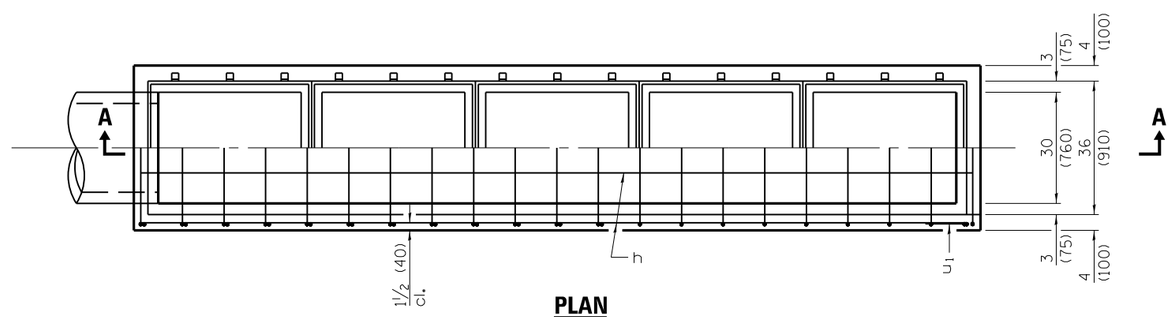


## PLAN

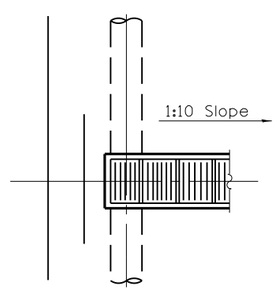


Detail showing exit from side (or sides)

## GENERAL NOTES

If field conditions will permit, bottom of inlet box shall have 2 (50) slope.

All slope ratios are expressed as units of vertical displacement to units of horizontal displacement (V:H).

All dimensions are in inches (millimeters) unless otherwise shown.

Illinois Department of Transportation

PASSED January 1, 2011
Michael Brand
ENGINEER OF POLICY AND PROCEDURES
APPROVED January 1, 2011
Scott E. Stokes
ENGINEER OF DESIGN AND ENVIRONMENT

ISSUED 1-1-97

| DATE | REVISIONS |
|---|---|
| 1-1-11 | Added 36 (910) dimension |
| | to plan view. Corrected |
| | weld symbols on Sheet 2. |
| 1-1-09 | Switched units to |
| | English (metric). Revised |
| | General Notes. |

# INLET BOX
# TYPE 24 (600) G

(Sheet 1 of 2)

**STANDARD 542531–04**

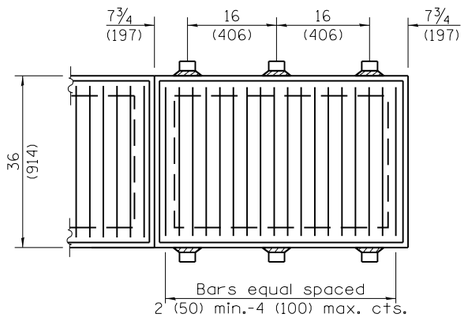


**TYPICAL STEEL GRATING**

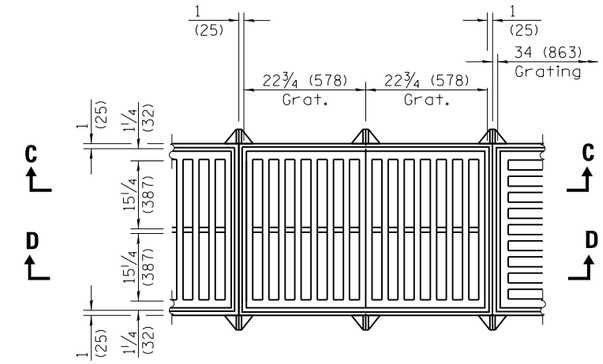


**TYPICAL CAST GRATING**

Material Required for One Inlet Box

| Bar | No. | Size | Length |
|---|---|---|---|
| h | 10 | No. 4 (No. 13) | 20′-0″ (6.10 m) |
| u | 17 | No. 4 (No. 13) | 6′-5″ (1.96 m) |
| $u_1$ | 6 | No. 4 (No. 13) | 5′-11″ (1.80 m) |
| $u_2$ | 1 | No. 4 (No. 13) | 5′-6″ (1.68 m) |
| v | 2 | No. 4 (No. 13) | 33 (840) |
| $v_1$ | 6 | No. 4 (No. 13) | 30 (760) |
| $v_2$ | 10 | No. 4 (No. 13) | 24 (610) |
| $v_3$ | 10 | No. 4 (No. 13) | 18 (460) |
| Concrete | | cu. yds. ($m^3$) | 3.2 (2.45) |
| Reinf. Bars | | lbs. (kg) | 270 (122) |
| Grating | | (sq. ft.) ($m^2$) | 56.0 (5.20) |

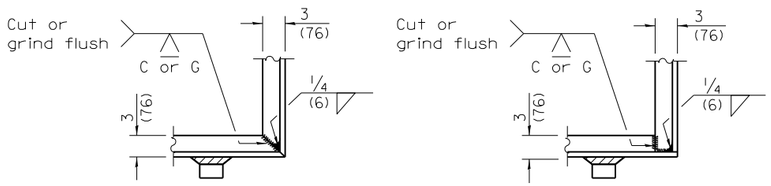


**TYPICAL CORNER OF STEEL GRATING FRAME**

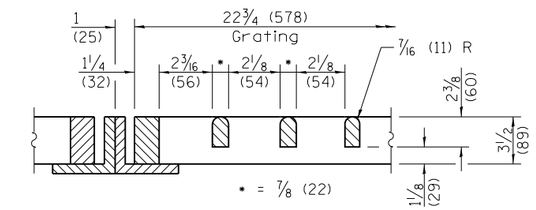


**DETAIL B**

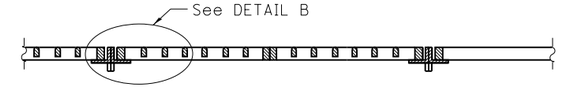


**SECTION C–C**

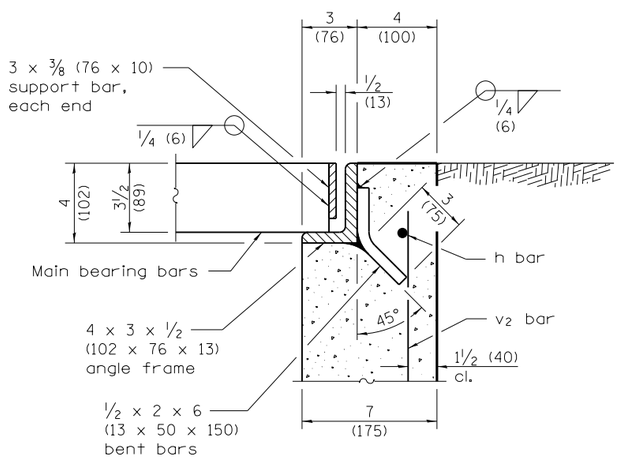


**SECTION B–B**

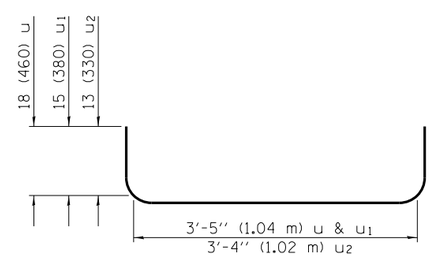


**BARS u, u1 & u2**

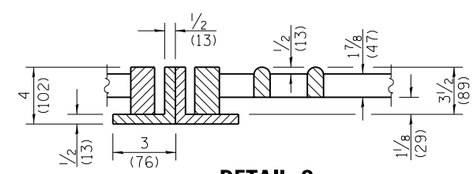


**DETAIL C**

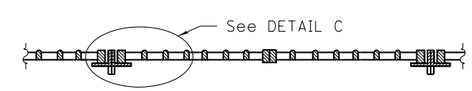


**SECTION D–D**

Illinois Department of Transportation

PASSED January 1, 2011
Michael Brand
ENGINEER OF POLICY AND PROCEDURES

APPROVED January 1, 2011
Scott Shaw
ENGINEER OF DESIGN AND ENVIRONMENT

ISSUED 1-1-97

# INLET BOX
# TYPE 24 (600) G

(Sheet 2 of 2)

**STANDARD 542531–04**

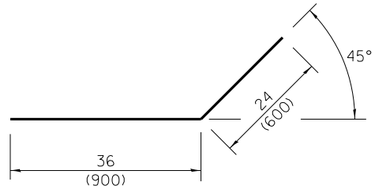


**Bar $h_2$**

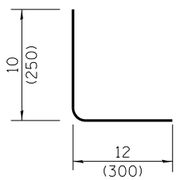


**Bar $L$**

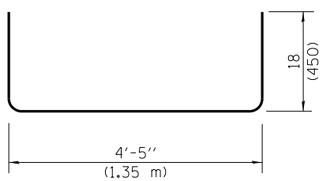


**Bar u**

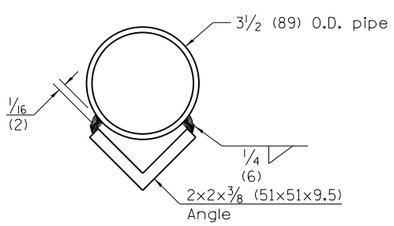


**SECTION D–D**

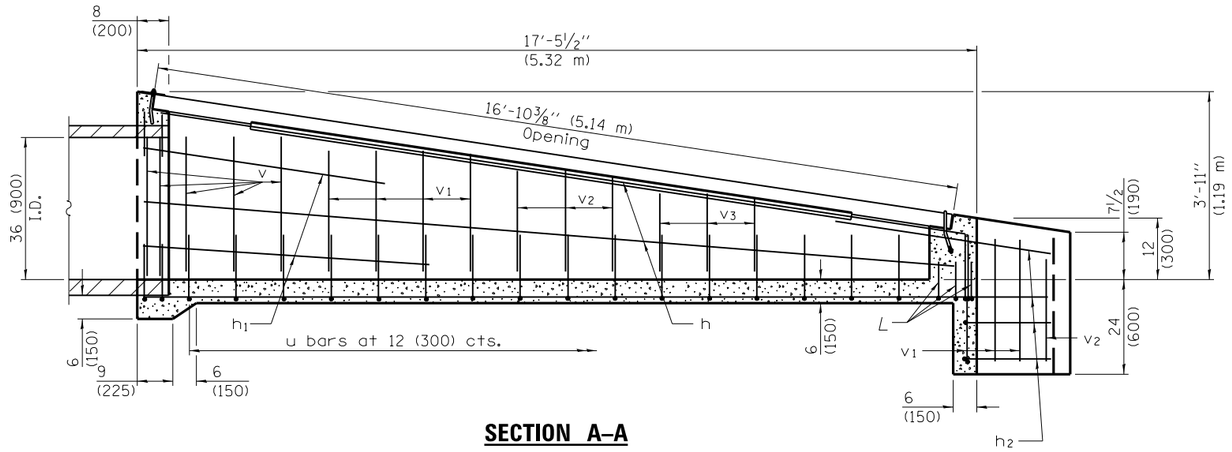


**SECTION A–A**

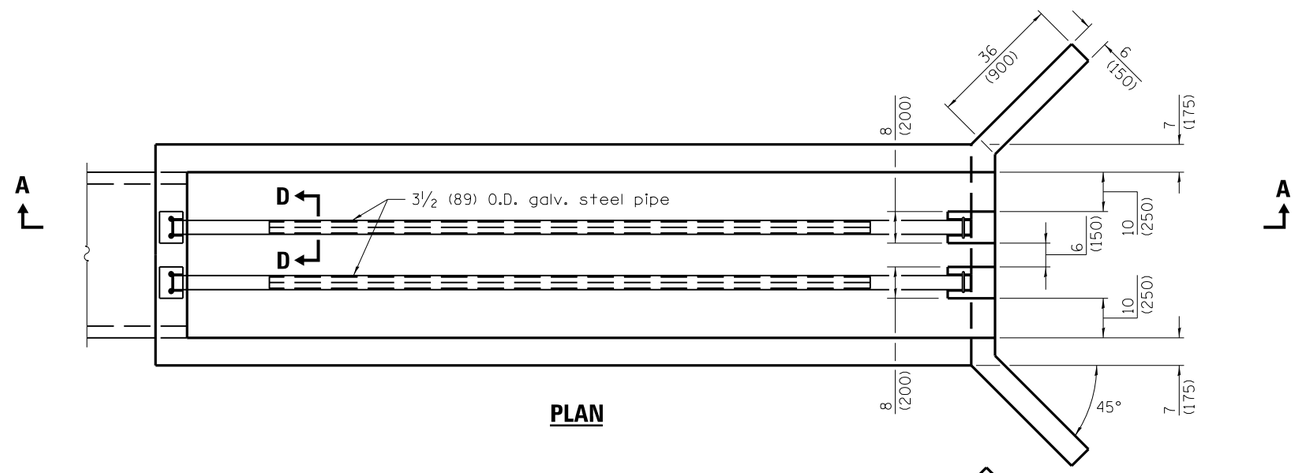


**PLAN**

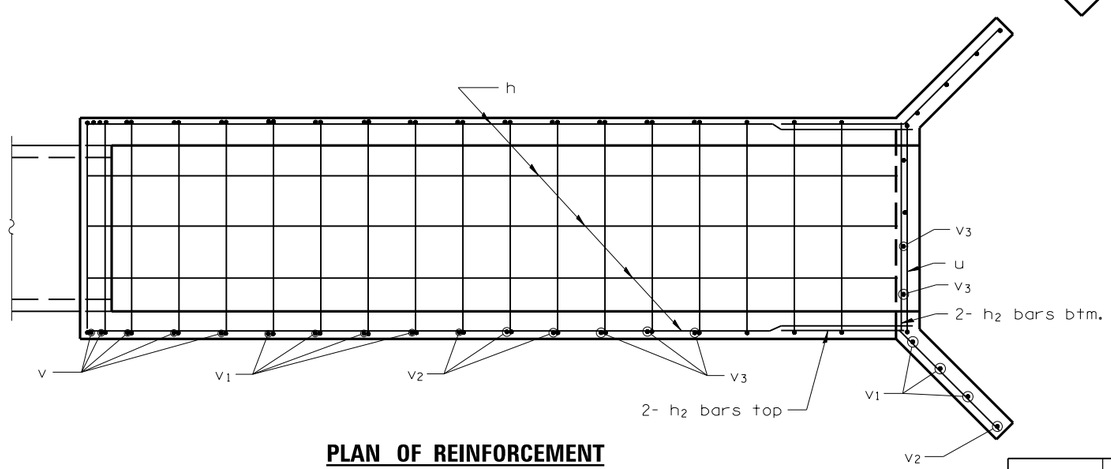


**PLAN OF REINFORCEMENT**

Material required for one inlet box

| Bar | Qty. | Size | Length |
|---|---|---|---|
| h | 9 | No. 4 (No. 13) | 17'-0" (5.18 m) |
| $h_1$ | 4 | No. 4 (No. 13) | 6'-3" (1.90 m) |
| $h_2$ | 8 | No. 4 (No. 13) | 5'-0" (1.50 m) |
| $L$ | 6 | No. 4 (No. 13) | 22 (550) |
| u | 21 | No. 4 (No. 13) | 7'-5" (2.25 m) |
| v | 10 | No. 4 (No. 13) | 36 (910) |
| $v_1$ | 14 | No. 4 (No. 13) | 30 (760) |
| $v_2$ | 8 | No. 4 (No. 13) | 24 (610) |
| $v_3$ | 10 | No. 4 (No. 13) | 18 (460) |
| Concrete | | cu. yds. ($m^3$) | 3.9 (3.0) |
| Reinf. Bars | | lbs. (kg) | 319 (145) |
| Galv. Steel Pipe | | 3½ (89) O.D. | 2 at 16'-10⅛" (5.15 m) |
| Galv. Steel Angle | | 2x2x⅜ (51x51x9.5) | 2 at 12'-10" (3.90 m) |

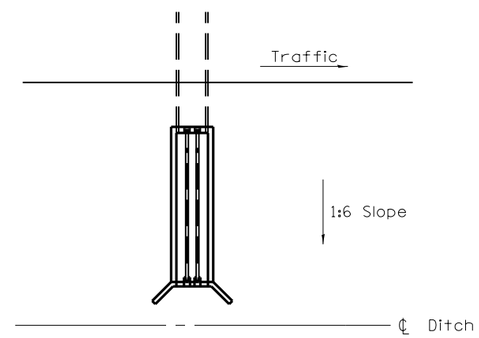


Sketch showing location and direction of box in relation to ℄ of ditch.

## GENERAL NOTES

All slope ratios are expressed as units of vertical displacement to units of horizontal displacement (V:H).

All dimensions are in inches (millimeters) unless otherwise shown.

Illinois Department of Transportation

PASSED January 1, 2010
ENGINEER OF POLICY AND PROCEDURES
APPROVED January 1, 2010
ENGINEER OF DESIGN AND ENVIRONMENT

ISSUED 1-1-97

| DATE | REVISIONS |
|---|---|
| 1-1-10 | Corrected 3'-11" vertical |
| | dimension line in |
| | Section A-A. |
| 1-1-09 | Switched units to |
| | English (metric). |

# INLET BOX
# TYPE 36 (900) A

(Sheet 1 of 2)

**STANDARD 542536–03**

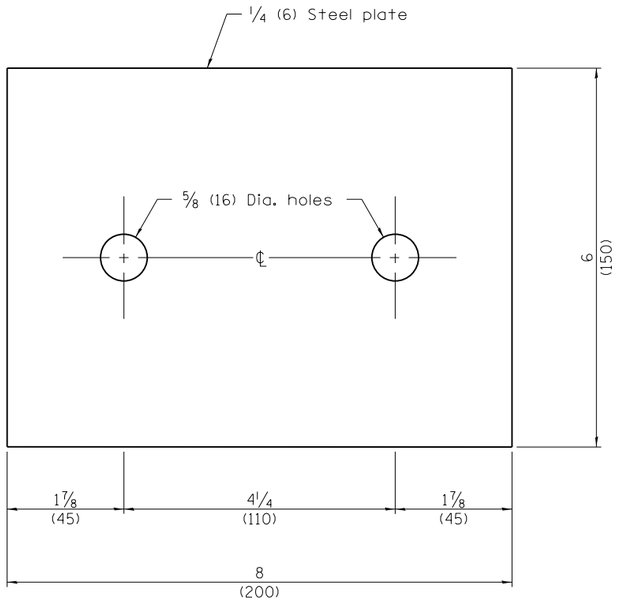


**TOP ANCHOR PLATE**
(2 - required)

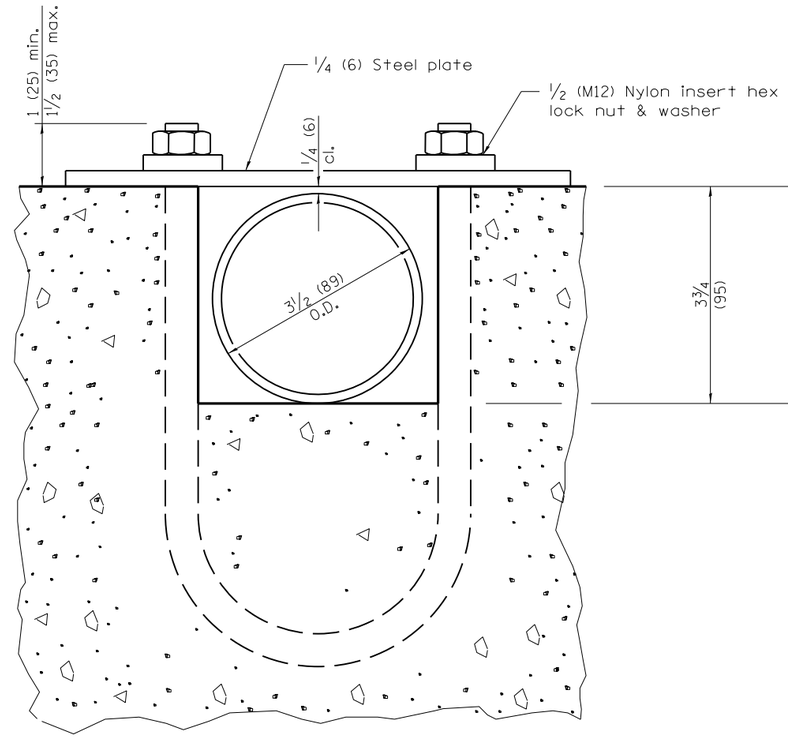


**SECTION B–B**

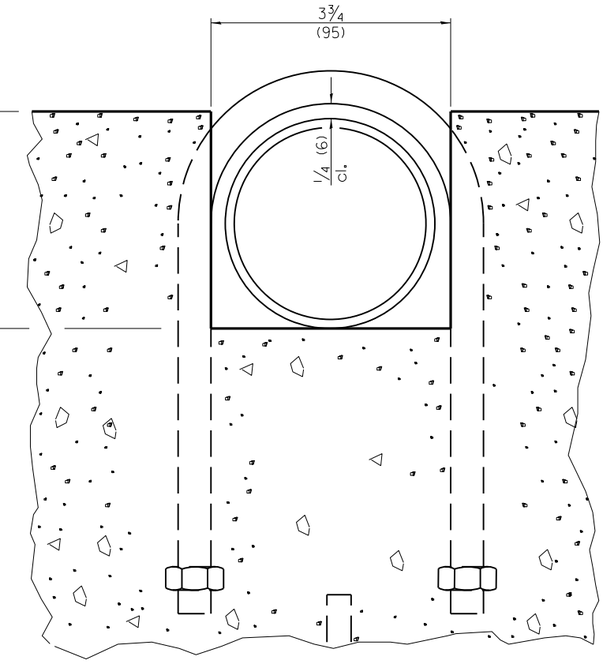


**SECTION C–C**

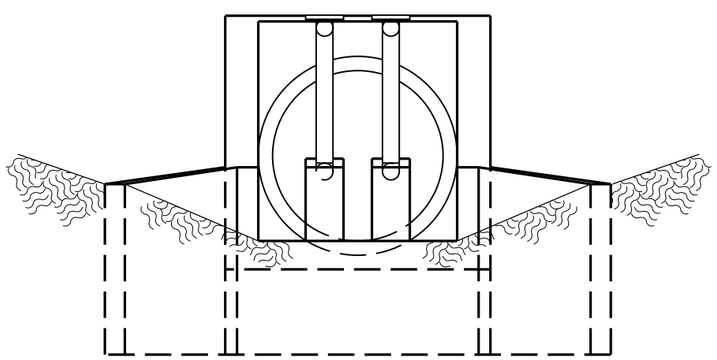

**END VIEW**

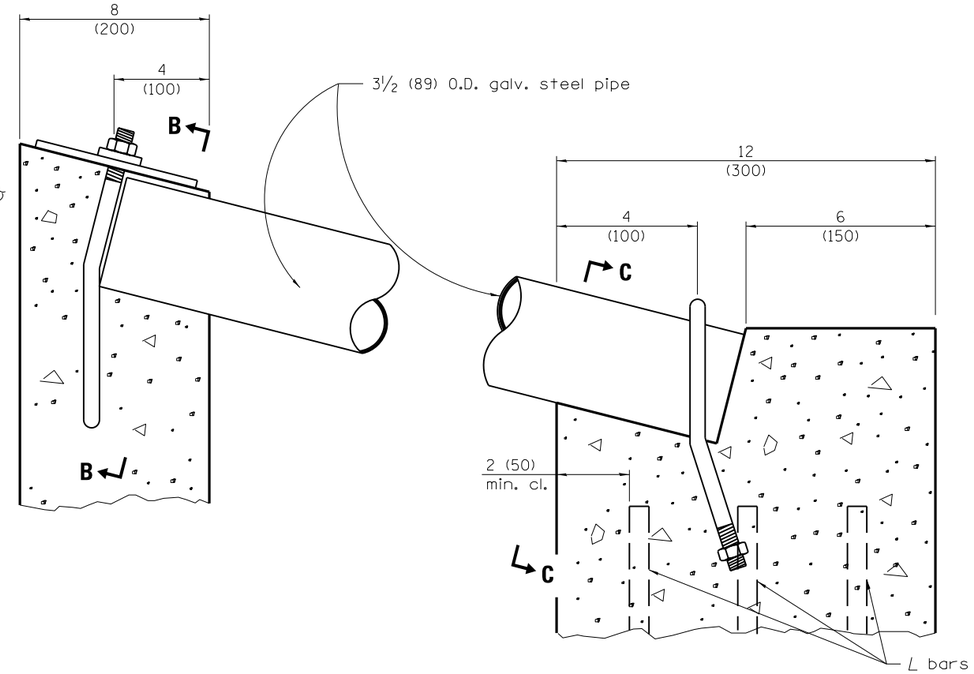


**DETAIL AT BLOCKOUTS**

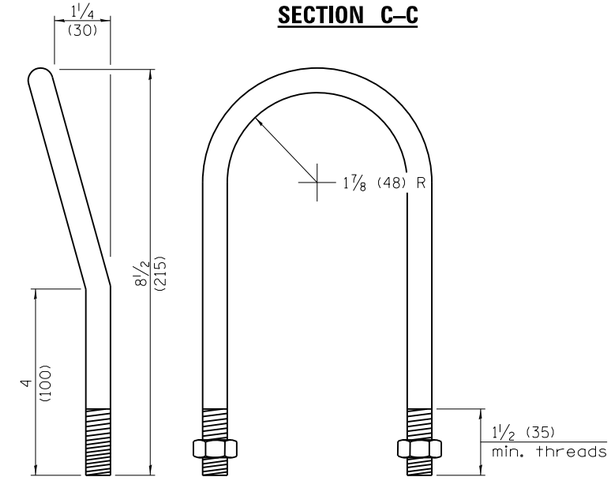


**1/2 (M12) U BOLT**
(4 - required)

Illinois Department of Transportation

PASSED January 1, 2010
ENGINEER OF POLICY AND PROCEDURES
APPROVED January 1, 2010
ENGINEER OF DESIGN AND ENVIRONMENT

ISSUED 1-1-97

# INLET BOX
# TYPE 36 (900) A

(Sheet 2 of 2)

**STANDARD 542536–03**

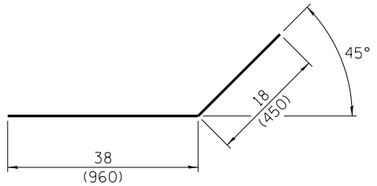


**Bar $h_2$**

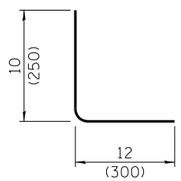


**Bar $L$**

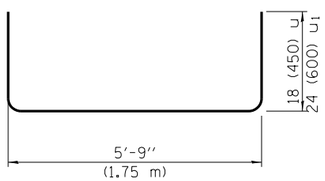


**Bar u & $u_1$**

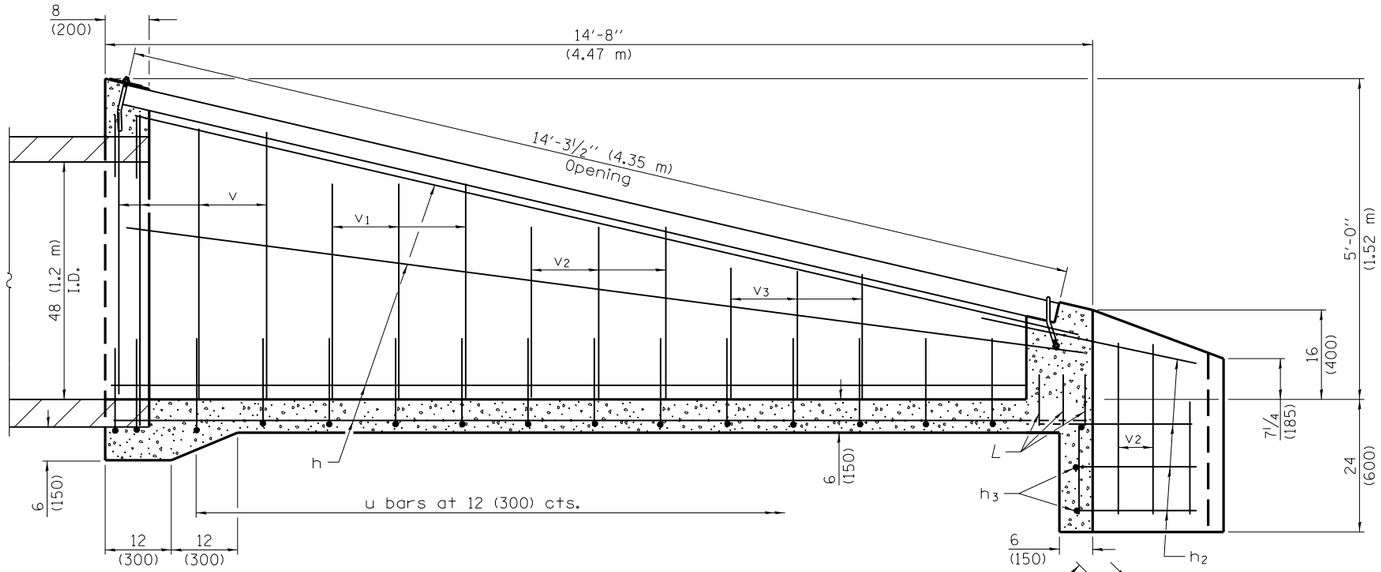


**SECTION A–A**

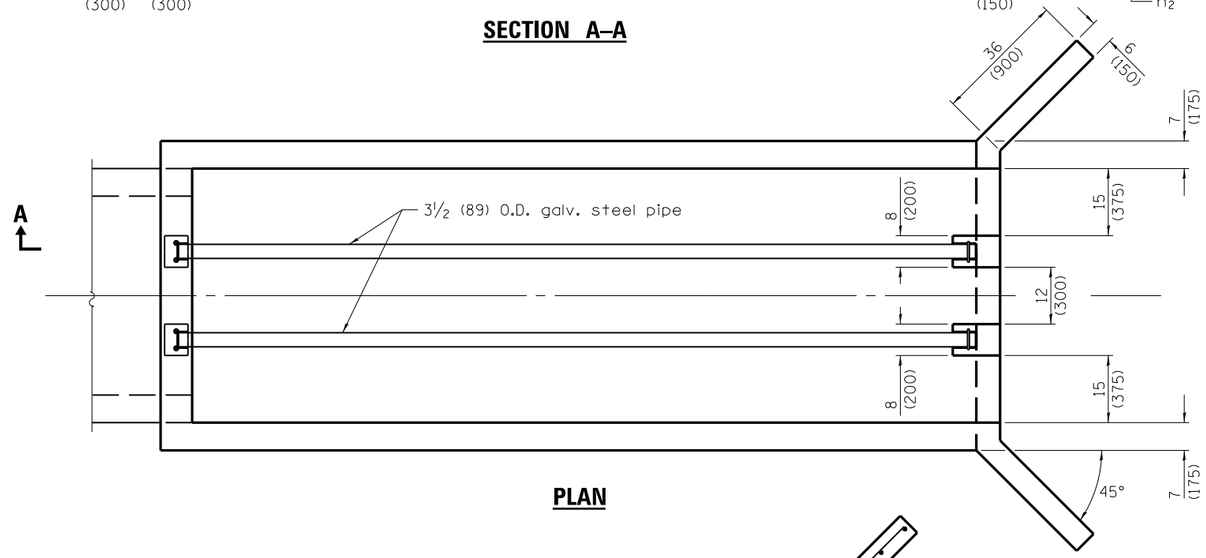


**PLAN**

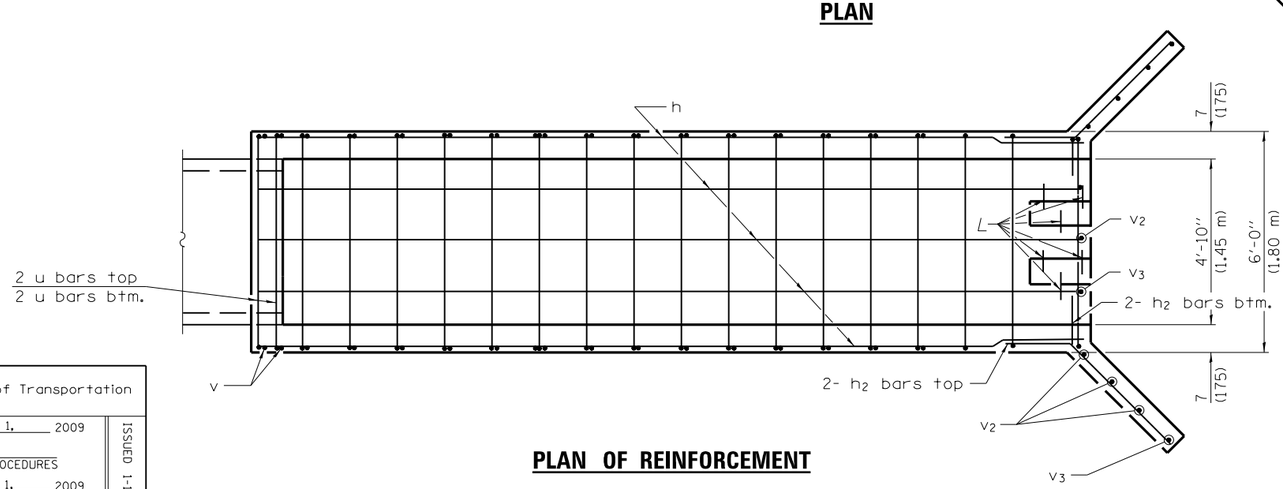


**PLAN OF REINFORCEMENT**

Material required for one inlet box

| Bar | Qty. | Size | Length |
|---|---|---|---|
| h | 11 | No. 4 (No. 13) | 14'-5" (4.40 m) |
| $h_2$ | 8 | No. 4 (No. 13) | 4'-8" (1.40 m) |
| $h_3$ | 2 | No. 4 (No. 13) | 5'-6" (1.70 m) |
| $L$ | 6 | No. 4 (No. 13) | 22 (550) |
| u | 16 | No. 4 (No. 13) | 8'-9" (2.67 m) |
| $u_1$ | 2 | No. 4 (No. 13) | 9'-9" (2.97 m) |
| v | 8 | No. 4 (No. 13) | 4'-3" (1.30 m) |
| $v_1$ | 6 | No. 4 (No. 13) | 3'-6" (1.07 m) |
| $v_2$ | 13 | No. 4 (No. 13) | 33 (840) |
| $v_3$ | 10 | No. 4 (No. 13) | 21 (530) |
| Concrete | | cu. yds. ($m^3$) | 5.0 (3.80) |
| Reinf. Bars | | lbs. (kg) | 324 (147) |
| Galv. Steel Pipe | | 3½ (89) O.D. | 2 at 14'-3¼" (4.35 m) |

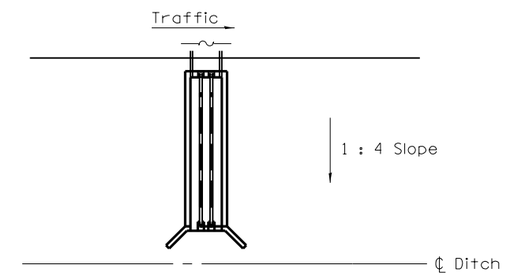


Sketch showing location and direction of box in relation to ℄ of ditch.

## GENERAL NOTES

All slope ratios are expressed as units of vertical displacement to units of horizontal displacement (V:H).

All dimensions are in inches (millimeters) unless otherwise shown.

Illinois Department of Transportation

PASSED January 1, 2009
ENGINEER OF POLICY AND PROCEDURES
APPROVED January 1, 2009
ENGINEER OF DESIGN AND ENVIRONMENT

ISSUED 1-1-97

| DATE | REVISIONS |
|---|---|
| 1-1-09 | Switched units to English (metric). |
| 1-1-07 | Soft converted metric rebars. |

# INLET BOX TYPE 48 (1200) A

(Sheet 1 of 2)

**STANDARD 542541–02**

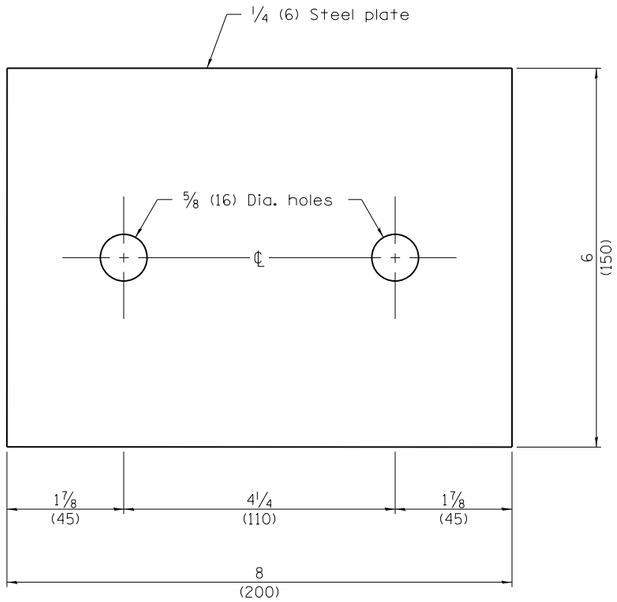


**TOP ANCHOR PLATE**
(2 - required)

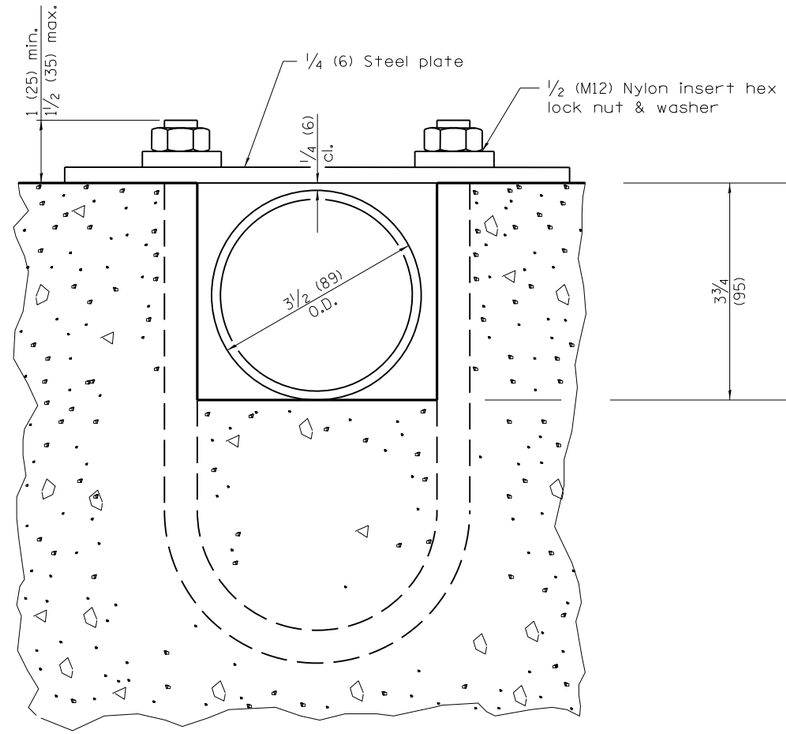


**SECTION B–B**

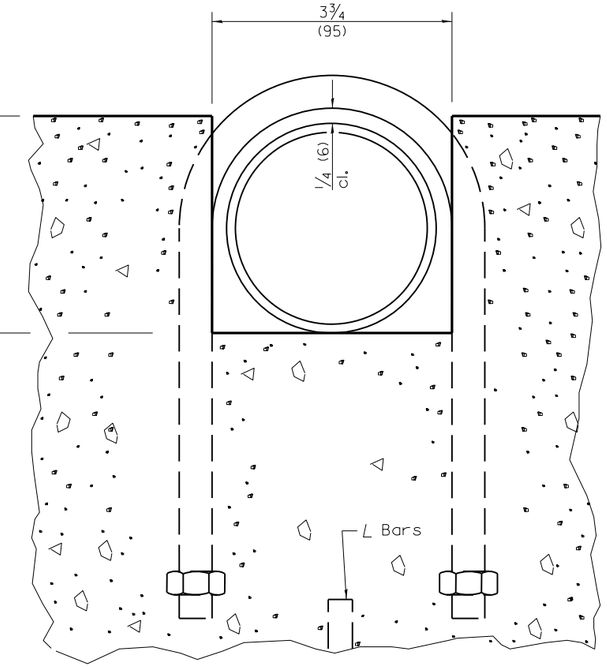


**SECTION C–C**

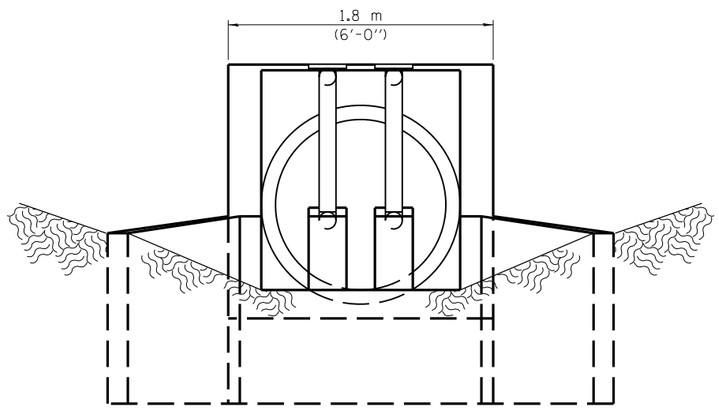


**END VIEW**

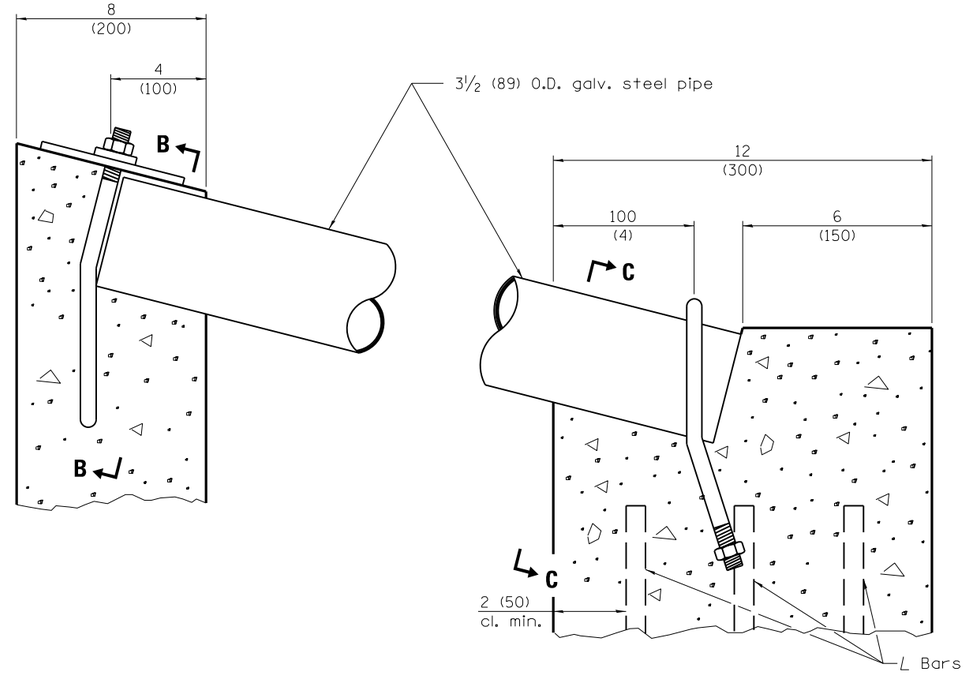


**DETAIL AT BLOCKOUTS**

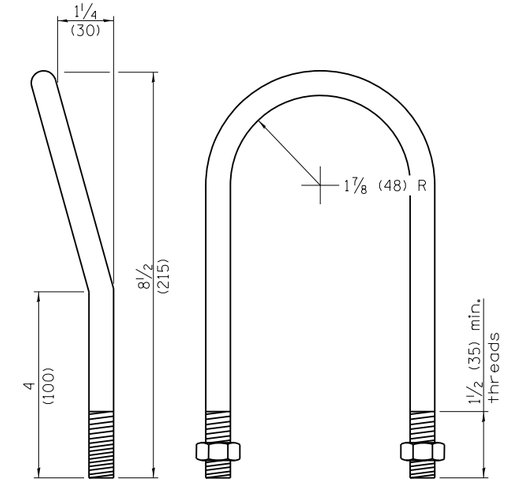


**1/2 (M12) U BOLT**
(4 - required)

Illinois Department of Transportation

PASSED January 1, 2009
ENGINEER OF POLICY AND PROCEDURES
APPROVED January 1, 2009
ENGINEER OF DESIGN AND ENVIRONMENT

ISSUED 1-1-97

# INLET BOX
# TYPE 48 (1200) A

(Sheet 2 of 2)

**STANDARD 542541–02**

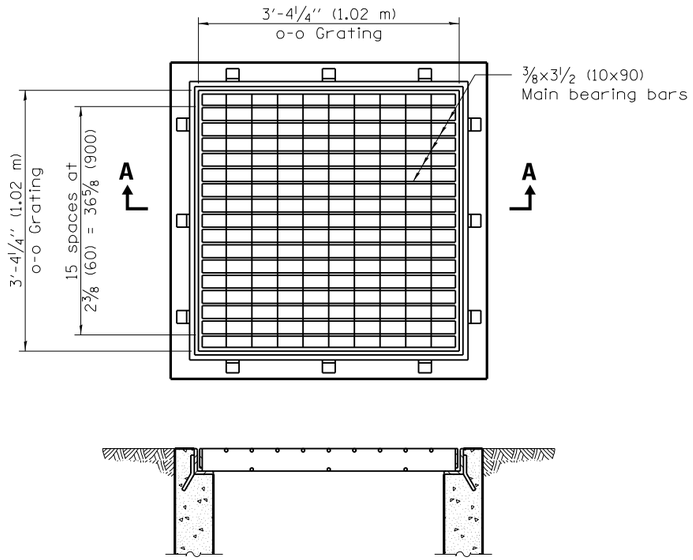


**SECTION A–A**

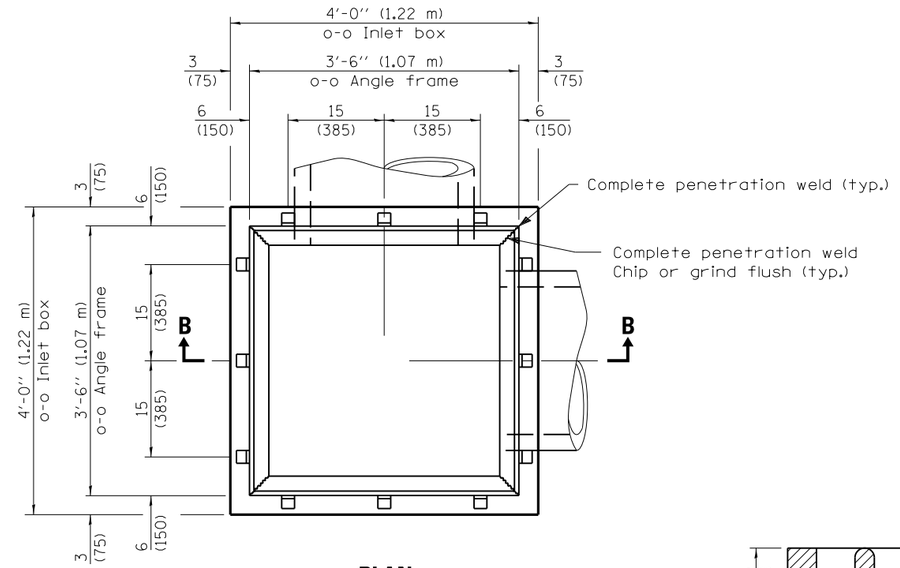


**PLAN**
(Grating omitted for clarity)

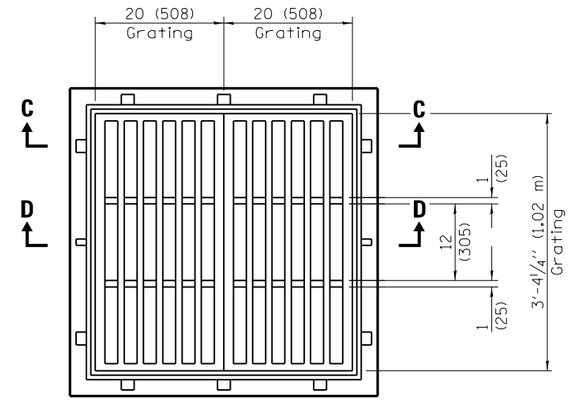


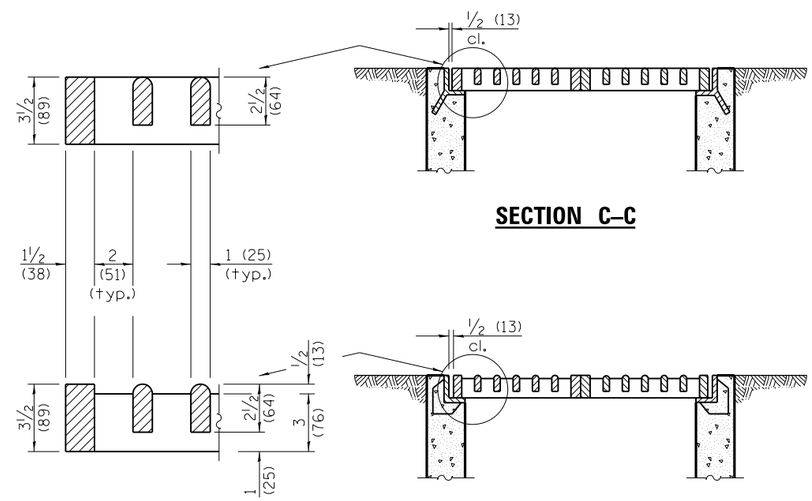


**SECTION C–C**

**SECTION D–D**
**CAST FRAME & GRATE**

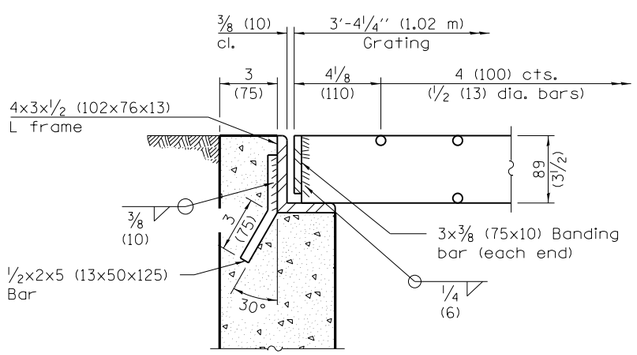


**STEEL FRAME & GRATE**

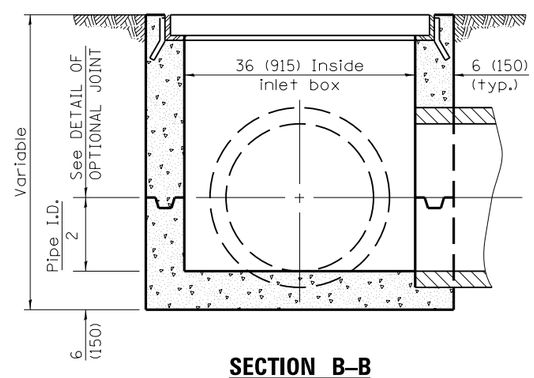


**SECTION B–B**

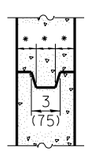


**DETAIL of**
**OPTIONAL JOINT**

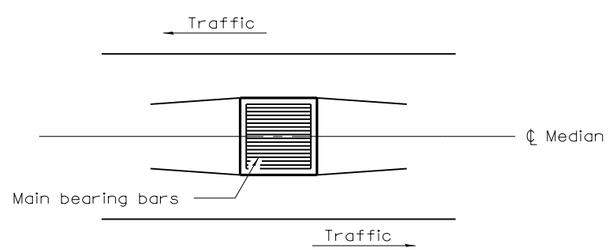


Sketch showing location and direction of main bearing bars in relation to ℄ median

All dimensions are in inches (millimeters) unless otherwise shown.

Illinois Department of Transportation

PASSED January 1, 2009
ENGINEER OF POLICY AND PROCEDURES
APPROVED January 1, 2009
ENGINEER OF DESIGN AND ENVIRONMENT

ISSUED 1-1-97

| DATE | REVISIONS |
|---|---|
| 1-1-09 | Switched units to |
| | English (metric). |
| | |
| 1-1-97 | Renum. Standard 2240-6. |
| | |
| | |

# FLUSH INLET BOX FOR MEDIAN

**STANDARD 542546–01**

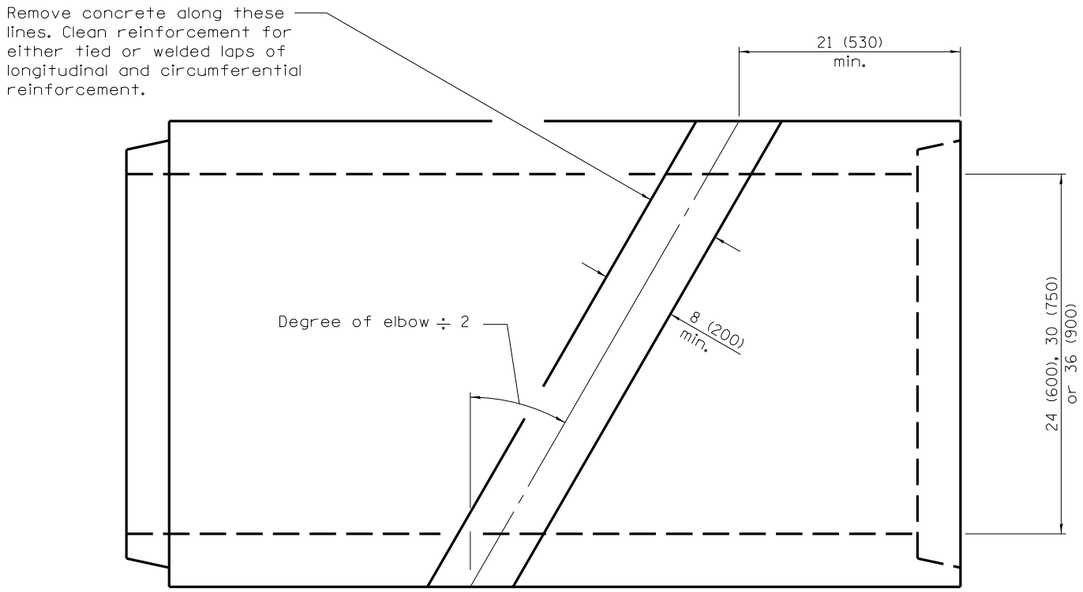


**PLAN**
(Reinforced concrete pipe)

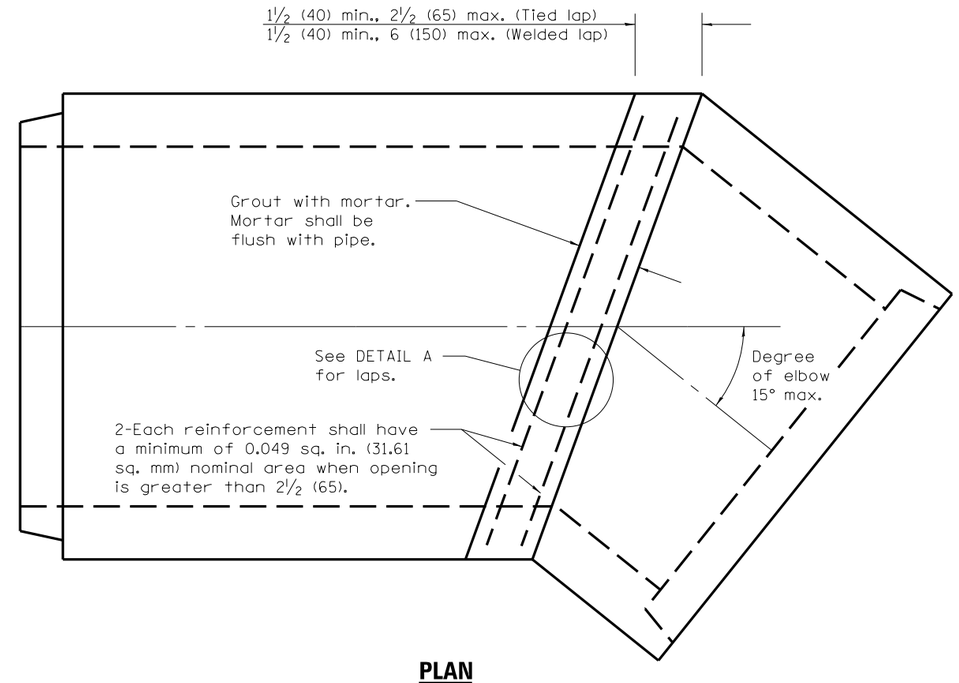


**PLAN**
(Reinforced concrete pipe elbow)

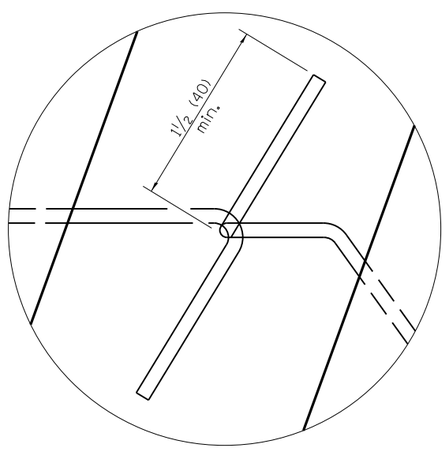


**TIED LAP**

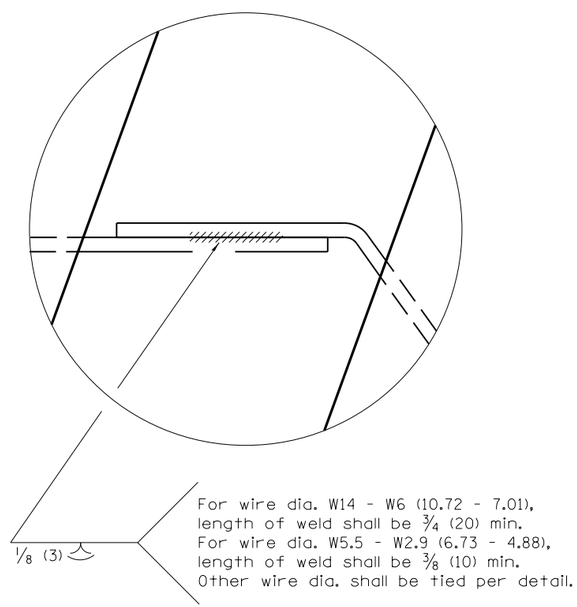


**WELDED LAP**

**DETAIL A**

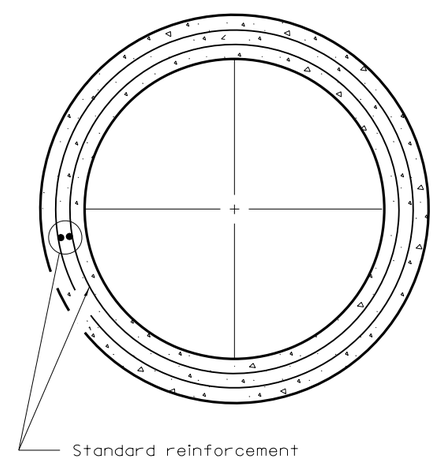


**TRANSVERSE SECTION**

All dimensions are in inches (millimeters) unless otherwise shown.

Illinois Department of Transportation

APPROVED January 1, 2011
Michael Brand
ENGINEER OF POLICY AND PROCEDURES

APPROVED January 1, 2011
Scott E. Sorg
ENGINEER OF DESIGN AND ENVIRONMENT

ISSUED 1-1-97

| DATE | REVISIONS |
|---|---|
| 1-1-11 | Corr. weld sym. on WELDED |
| | LAP det. Added pipe dia. to |
| | title. Set elbow to 15° max. |
| 1-1-10 | Corrected pipe diameter |
| | dimension lines. |
| | |

# REINFORCED CONCRETE PIPE ELBOW 24", 30" OR 36" (600 mm, 750 mm OR 900 mm)

**STANDARD 542601–03**

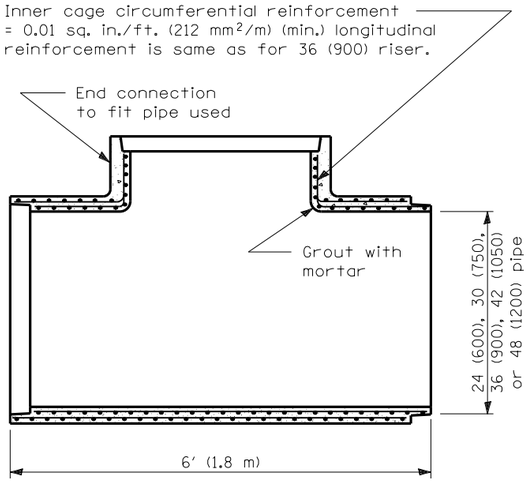


**LONGITUDINAL SECTION**

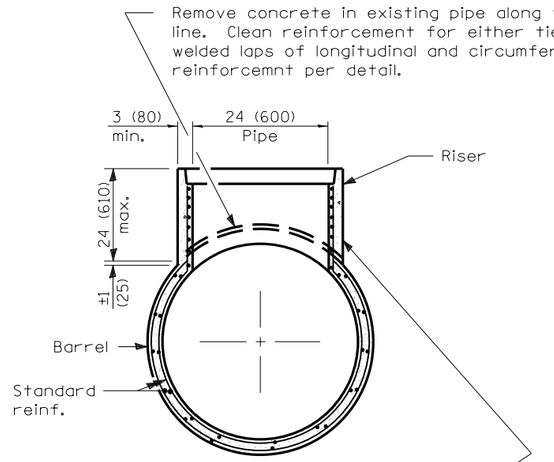


**TRANSVERSE SECTION**

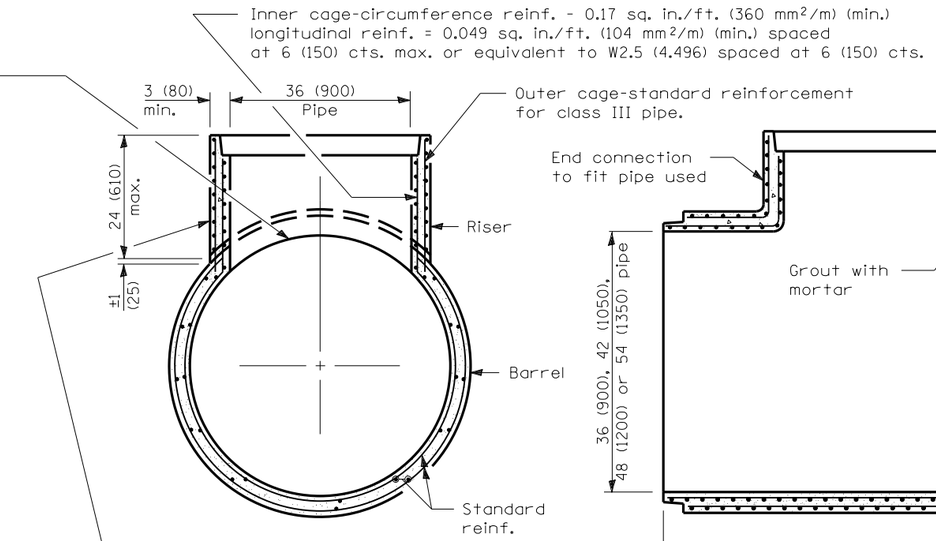


**TRANSVERSE SECTION**

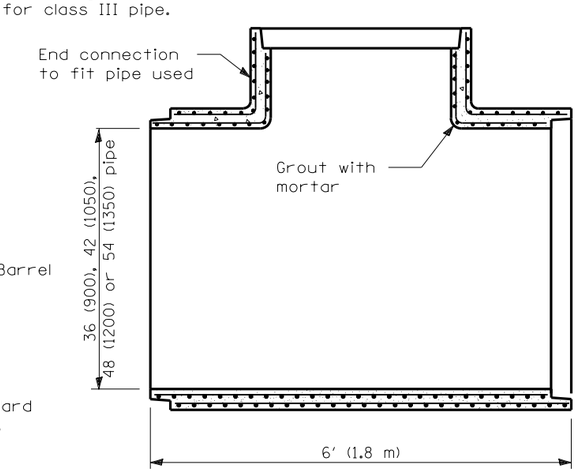


**LONGITUDINAL SECTION**

For wire W12 thru W2 (10.008 thru 7.188), length of weld shall be ¾ (20) min.
For wire W5.5 thru W2.5 (6.655 thru 4.496), length of weld shall be ⅜ (10) min.
Other wire gauges shall be tied per detail.

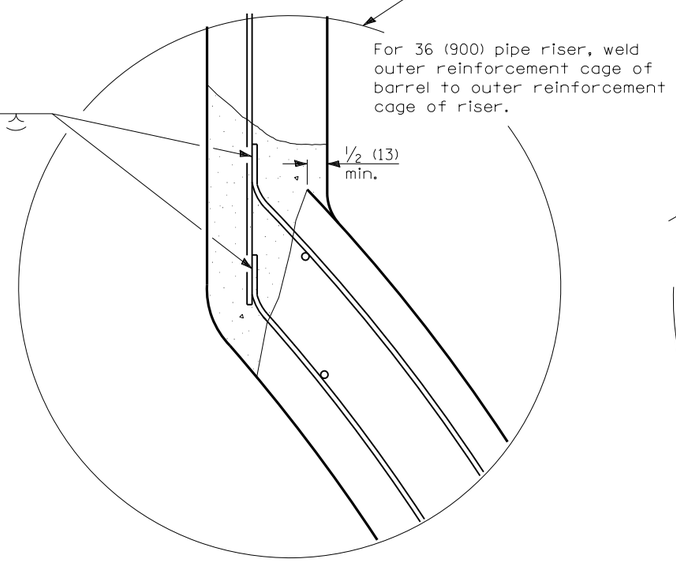


**WELDED LAP**

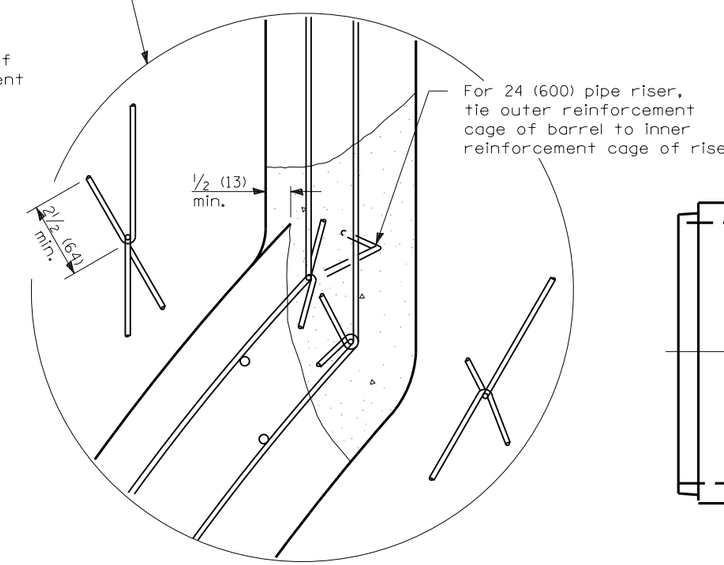


**TIED LAP**

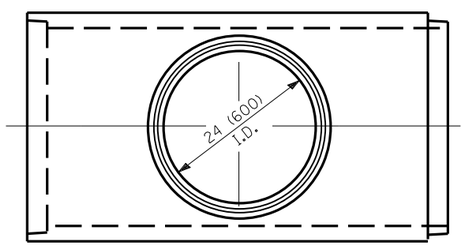


**PLAN**
**TEE WITH 24 (600) RISER**

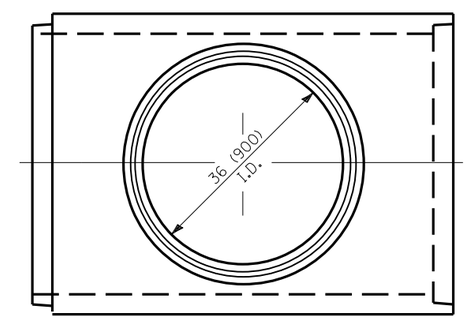


**PLAN**
**TEE WITH 36 (900) RISER**

All dimensions are in inches (millimeters) unless otherwise shown.

Illinois Department of Transportation

APPROVED January 1, 2011
Michael Brand
ENGINEER OF POLICY AND PROCEDURES
APPROVED January 1, 2011
ENGINEER OF DESIGN AND ENVIRONMENT

ISSUED 1-1-97

| DATE | REVISIONS |
|---|---|
| 1-1-11 | Corrected weld symbol |
| | on Welded Lap detail. |
| | |
| 1-1-09 | Switched units to |
| | English (metric). |
| | |

# REINFORCED CONCRETE PIPE TEE

**STANDARD 542606–02**

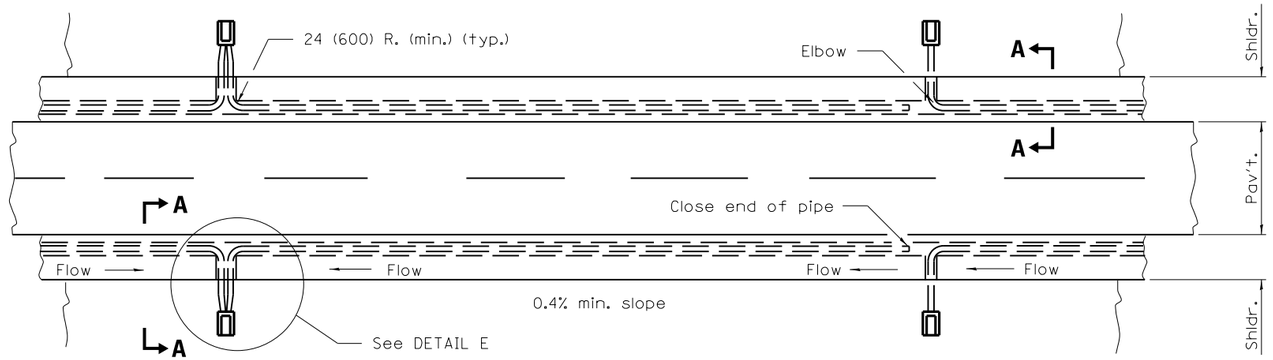


**PLAN**

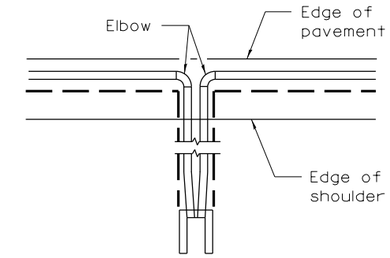


**DETAIL E**

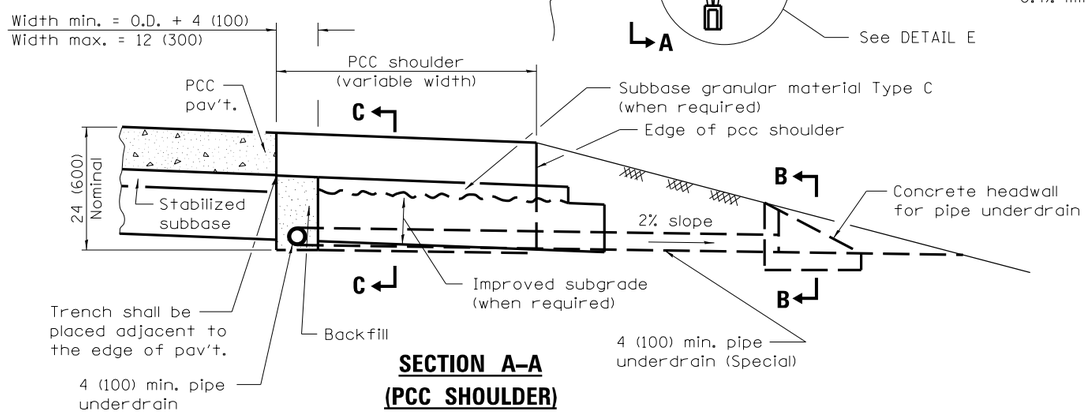


**SECTION A–A**
**(PCC SHOULDER)**

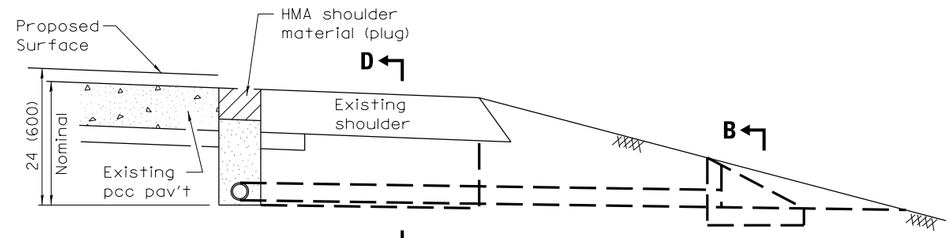


**SECTION A–A**

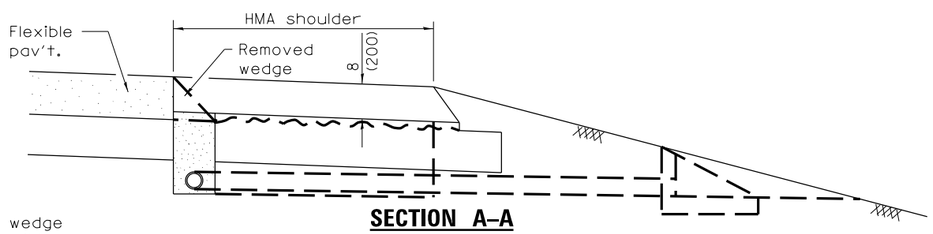


**SECTION A–A**
**(HMA SHOULDER)**
(Dimensions and notes not shown shall be as shown in the above Section A-A)

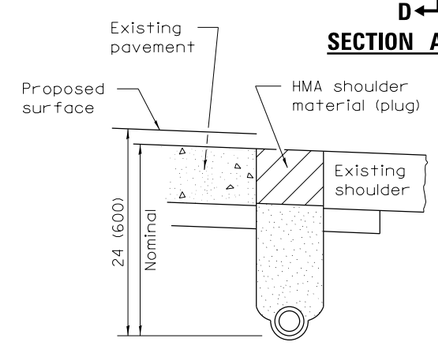


**TRENCH FOR CORRUGATED POLYETHYLENE TUBING ALTERNATE**

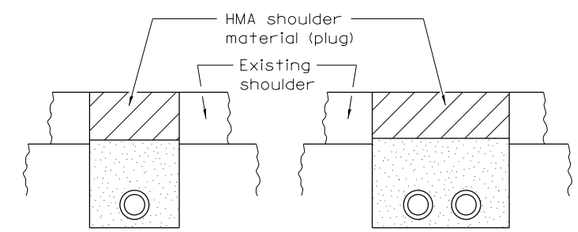


**SECTION D–D**

**SECTION D–D**
(Sag Locations)

**EXISTING CONSTRUCTION**
(Except as noted or shown, dimensions and notes specified for Existing Construction are the same as those of New Construction)

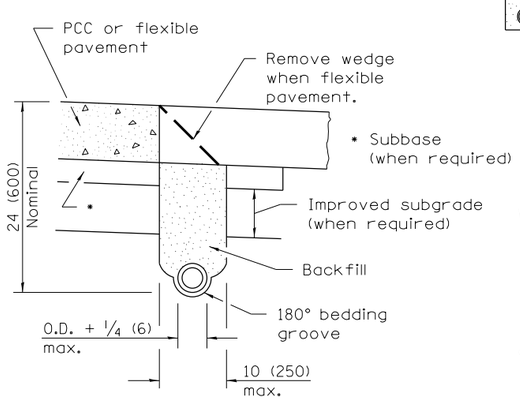


**TRENCH FOR CORRUGATED POLYETHYLENE TUBING ALTERNATE**

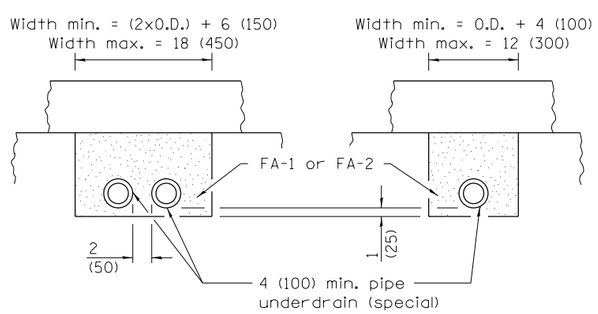


**SECTION C–C**
(Sag locations)

**SECTION C–C**

**NEW CONSTRUCTION**

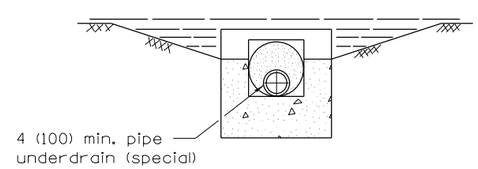


**SECTION B–B**

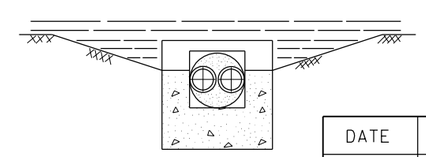

**SECTION B–B**
(Sag locations)

**GENERAL NOTES**

See Standard 601101 for details of concrete headwall.

See Standards 482001, 482006 and 483001 for details of shoulders not shown.

The 24 (600) radius on the drainage fitting is only a minimum. Larger radii meeting the approval of the Engineer may be substituted.

All dimensions are in inches (millimeters) unless otherwise shown.

Illinois Department of Transportation

PASSED April 1, 2016
Michael Brand
ENGINEER OF POLICY AND PROCEDURES
APPROVED April 1, 2016
ENGINEER OF DESIGN AND ENVIRONMENT

ISSUED 1-1-97

| DATE | REVISIONS |
|---|---|
| 4-1-16 | Renamed standard. Omitted |
| | drainage mat option. |
| | |
| 1-1-11 | Added 'PCC' and 'HMA' |
| | to SECTION A-A titles |
| | on Sheet 2. |

# PIPE UNDERDRAINS

**STANDARD 601001–05**

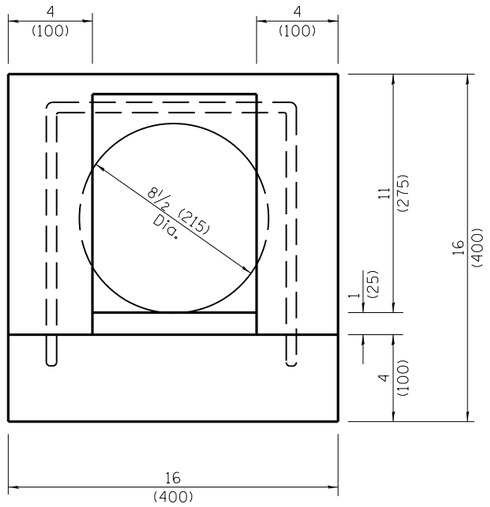


**FRONT VIEW**

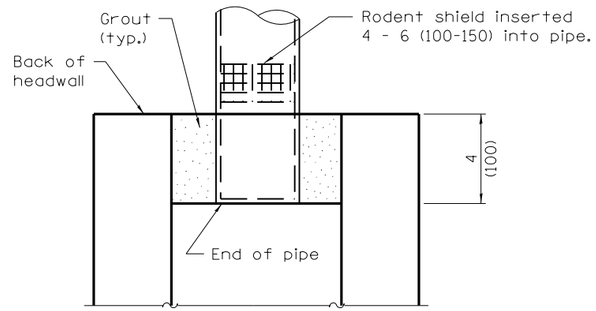


**RODENT SHIELD PLACEMENT**

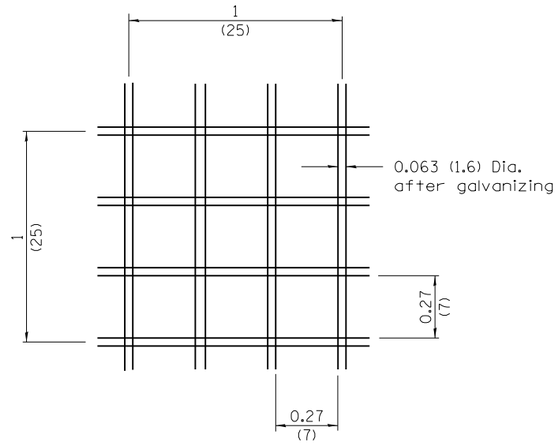


**SECTION A–A**

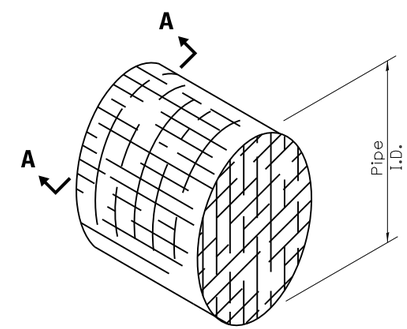


**DETAIL OF RODENT SHIELD**

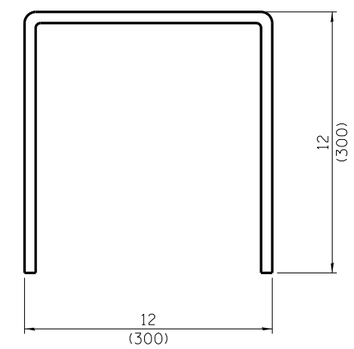


**BAR h**

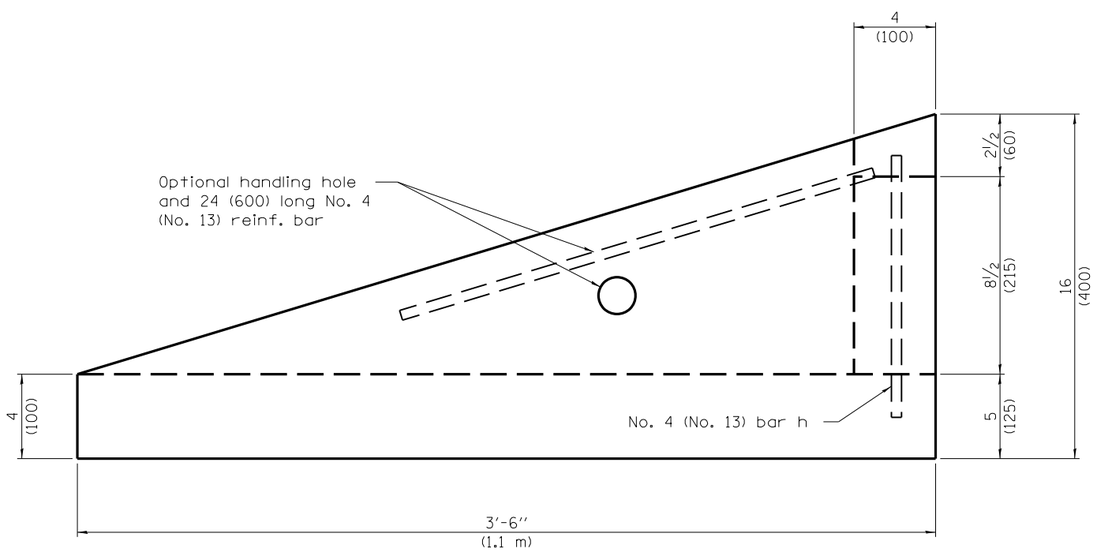


**SIDE VIEW**

## GENERAL NOTES

An alternate paved invert meeting the approval of the Engineer may be substituted for that shown in side view.

All dimensions are in inches (millimeters) unless otherwise shown.

Illinois Department of Transportation

PASSED April 1, 2016

Michael Brand
ENGINEER OF POLICY AND PROCEDURES

APPROVED April 1, 2016

ENGINEER OF DESIGN AND ENVIRONMENT

ISSUED 1-1-97

| DATE | REVISIONS |
|---|---|
| 4-1-16 | Renamed standard to be |
| | consistent with specs and |
| | other standards. |
| 1-1-09 | Switched units to |
| | English (metric). |
| | |

# CONCRETE HEADWALL FOR PIPE UNDERDRAINS

**STANDARD 601101–02**

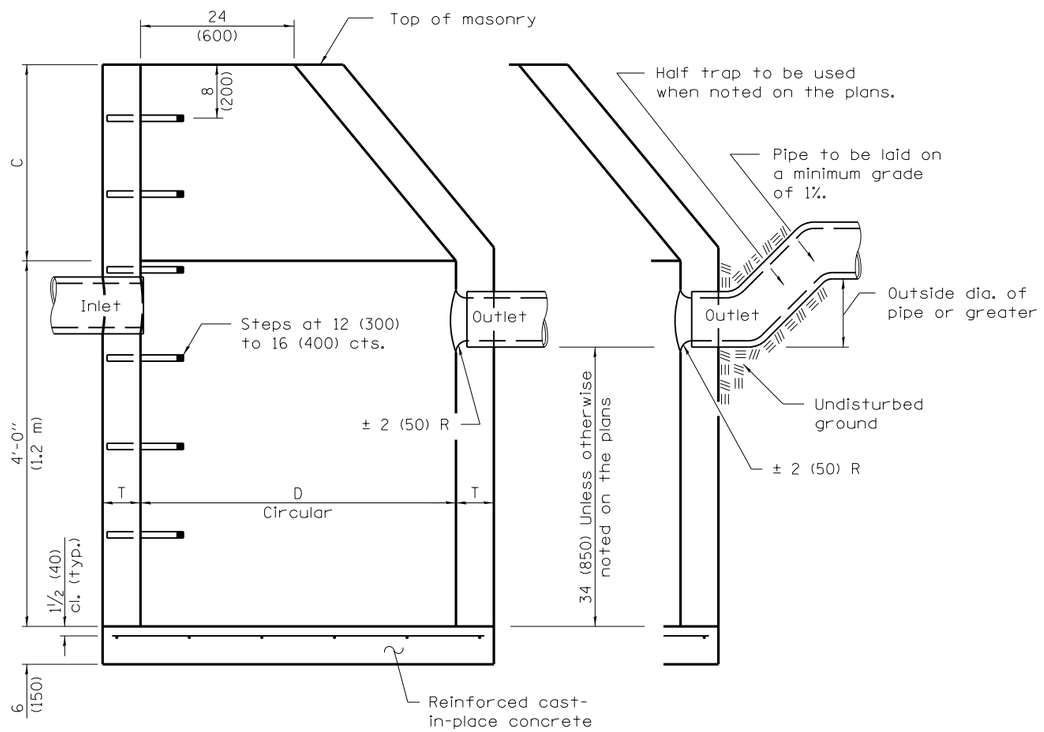


**ELEVATION**
(Standard Outlet)

**ELEVATION**
(Half Trap)

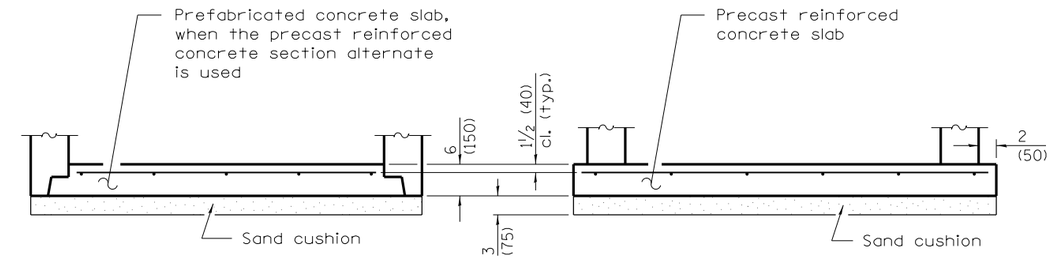


## ALTERNATE BOTTOM SLAB

| ALTERNATE MATERIALS FOR WALLS | D | C* | T (min.) |
|---|---|---|---|
| Concrete Masonry Unit | 4'-0" (1.2 m)<br>5'-0" (1.5 m) | 30 (750)<br>3'-9" (1.15 m) | 5 (125)<br>5 (125) |
| Brick Masonry | 4'-0" (1.2 m)<br>5'-0" (1.5 m) | 30 (750)<br>3'-9" (1.15 m) | 8 (200)<br>8 (200) |
| Precast Reinforced Concrete Section | 4'-0" (1.2 m)<br>5'-0" (1.5 m) | 30 (750)<br>3'-9" (1.15 m) | 4 (100)<br>5 (125) |
| Cast-in-place Concrete | 4'-0" (1.2 m)<br>5'-0" (1.5 m) | 30 (750)<br>3'-9" (1.15 m) | 6 (150)<br>6 (150) |

* For precast reinforced concrete sections, dimension "C" may vary from the dimension given to plus 6 (150).

## GENERAL NOTES

Bottom slabs shall be reinforced with a minimum of 0.20 sq. in./ft (420 sq. mm/m) in both directions with a maximum spacing of 12 (300).

Bottom slabs may be connected to the riser as determined by the fabricator; however, only a single row of reinforcement around the perimeter may be utilized.

See Standard 602601 for optional precast reinforced concrete flat slab top.

See Standard 602701 for details of steps.

All dimensions are in inches (millimeters) unless otherwise shown.

Illinois Department of Transportation

PASSED January 1, 2011
Michael Brand
ENGINEER OF POLICY AND PROCEDURES
APPROVED January 1, 2011
ENGINEER OF DESIGN AND ENVIRONMENT

ISSUED 1-1-97

| DATE | REVISIONS |
|---|---|
| 1-1-11 | Added 'Outside' to half trap |
| | note. Detail rein. in slabs. |
| | Revised general notes. |
| 1-1-09 | Switched units to |
| | English (metric). |
| | |

# CATCH BASIN TYPE A

**STANDARD 602001–02**

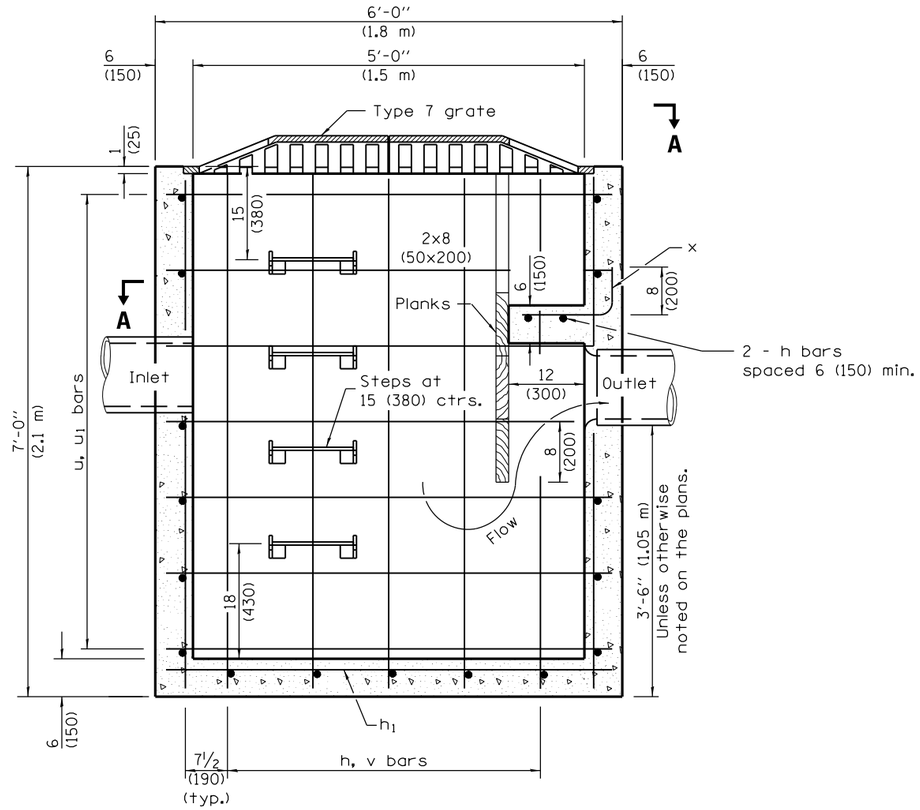


## ELEVATION

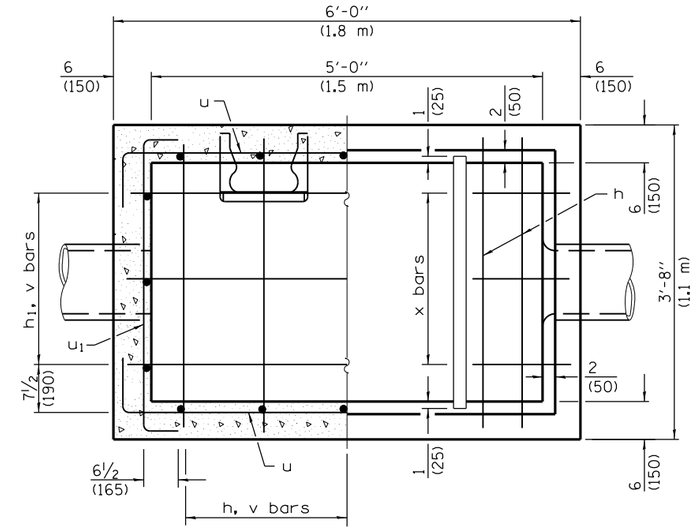


## SECTION A–A

(Grating removed to show plan of baffles.)

## MATERIALS REQUIRED FOR ONE (1) TYPE B CATCH BASIN

| Bar | Qty. | Size | Shape | Length |
|---|---|---|---|---|
| h | 7 | No. 4 (No. 13) | ——— | 3′-5″ (1.02 m) |
| $h_1$ | 3 | No. 4 (No. 13) | ——— | 5′-9″ (1.72 m) |
| u | 14 | No. 4 (No. 13) | └———┘ | 7′-0″ (2.10 m) |
| $u_1$ | 14 | No. 4 (No. 13) | └———┘ | 4′-6″ (1.35 m) |
| v | 16 | No. 4 (No. 13) | ——— | 6′-9″ (2.02 m) |
| x | 3 | No. 4 (No. 13) | ———┘ | 1′-11″ (580) |
| Concrete | | | cu. yd. ($m^3$) | 2.5 (1.90) |
| Reinforcement bars | | | lbs. (kg) | 210 (95) |

All bars shall be at 12 (300) centers unless otherwise shown. Reinforcement bar clearance shall be 1½ (40).

## GENERAL NOTES

See Standard 602701 for details of steps.

All dimensions are in inches (millimeters) unless otherwise shown.

Illinois Department of Transportation

PASSED January 1, 2013
Michael Brand
ENGINEER OF POLICY AND PROCEDURES
APPROVED January 1, 2013
ENGINEER OF DESIGN AND ENVIRONMENT

ISSUED 1-1-97

| DATE | REVISIONS |
|---|---|
| 1-1-13 | Revised and relocated |
| | steps. |
| | |
| 1-1-11 | Added additional bar |
| | identification. |
| | |

# CATCH BASIN TYPE B

STANDARD 602006–04

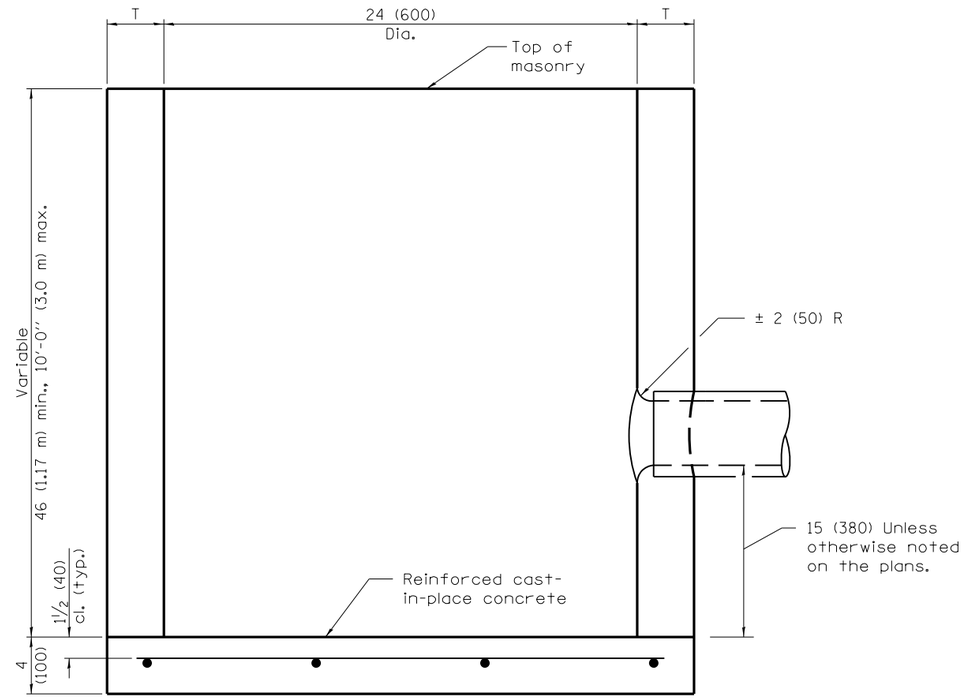


**ELEVATION**

| ALTERNATE MATERIALS FOR WALLS | T (min) |
|---|---|
| Precast Reinforced Concrete Section | 3 (75) |
| Concrete Masonry Unit | 5 (125) |
| Cast-in-Place Concrete | 6 (150) |
| Brick Masonry | 8 (200) |

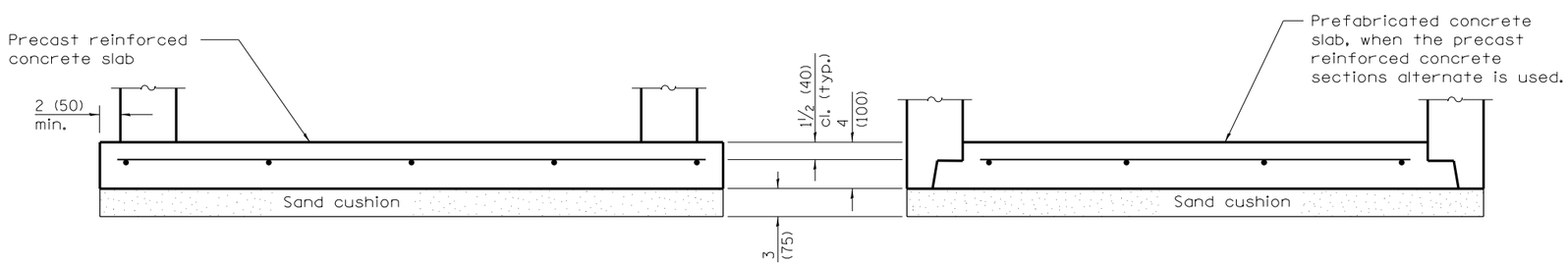


**ALTERNATE BOTTOM SLAB**

## GENERAL NOTES

Bottom slabs shall be reinforced with a minimum of 0.27 sq. in./ft. (570 sq. mm/m) in both directions with a maximum spacing of 9 (230).

Bottom slabs may be connected to the riser as determined by the fabricator; however, only a single row of reinforcement around the perimeter may be utilized.

All dimensions are in inches (millimeters) unless otherwise shown.

Illinois Department of Transportation

PASSED January 1, 2011
Michael Brand
ENGINEER OF POLICY AND PROCEDURES

APPROVED January 1, 2011
ENGINEER OF DESIGN AND ENVIRONMENT

ISSUED 1-1-97

| DATE | REVISIONS |
|---|---|
| 1-1-11 | Detailed rein. in slabs. |
| | Added max. limit to height. |
| | Added general notes. |
| 1-1-09 | Switched units to |
| | English (metric). |
| | |

# CATCH BASIN TYPE C

**STANDARD 602011–02**

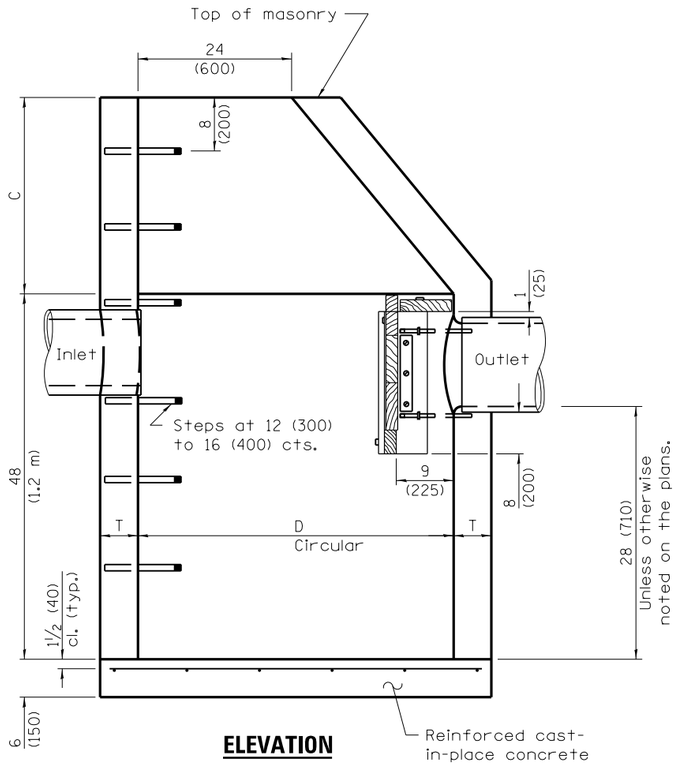


**ELEVATION**

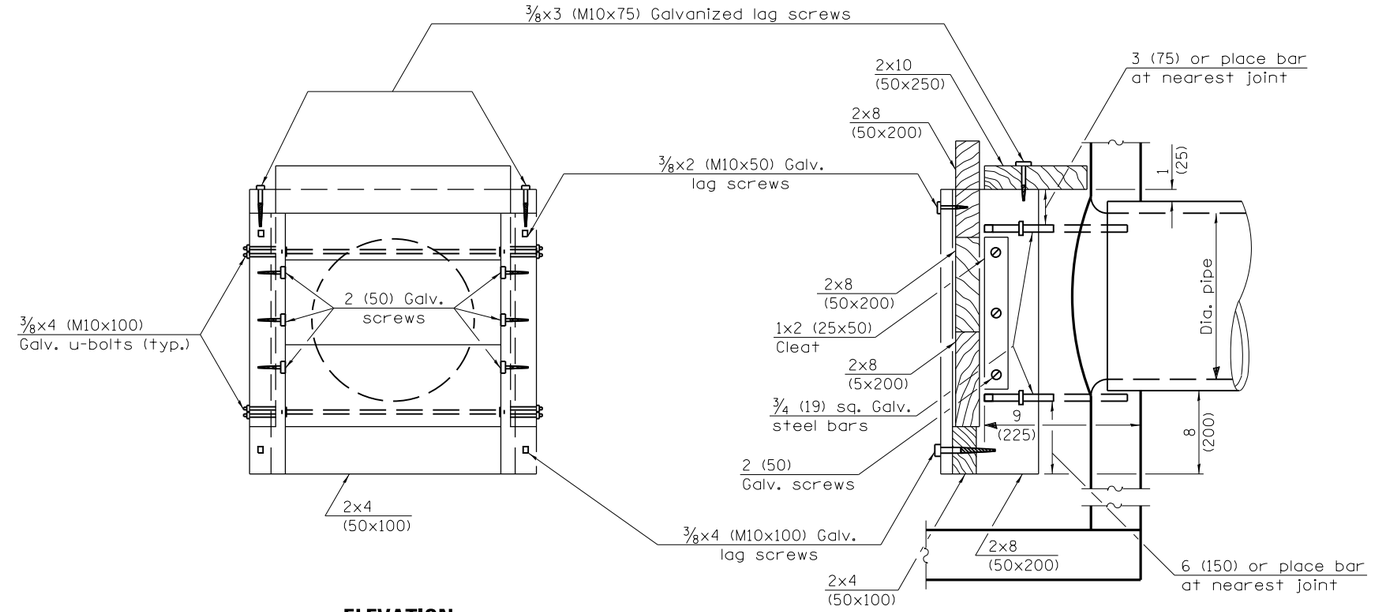


**ELEVATION**

**SECTION A–A**

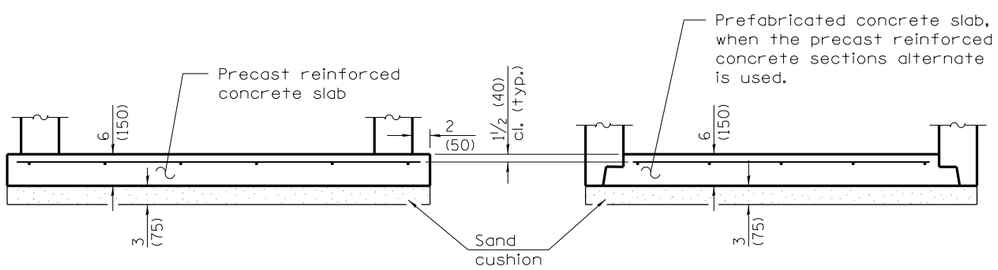


**ALTERNATE BOTTOM SLAB**

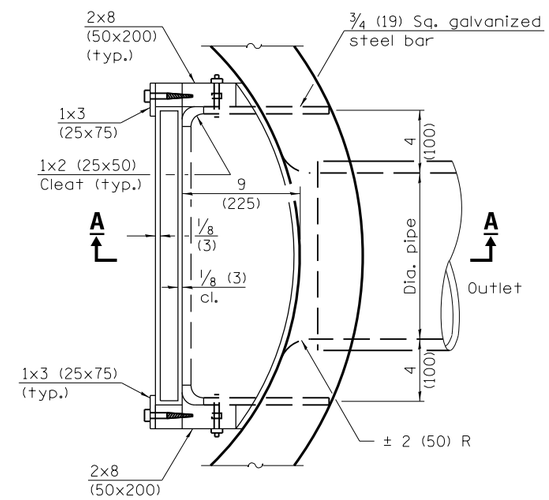


**PLAN**

| ALTERNATE MATERIALS FOR WALLS | D | C* | T (min.) |
|---|---|---|---|
| Concrete Masonry Unit | 36 (900)<br>4′-0″ (1.20 m) | 15 (380)<br>30 (760) | 5 (125)<br>5 (125) |
| Brick Masonry | 36 (900)<br>4′-0″ (1.20 m) | 15 (380)<br>30 (760) | 8 (200)<br>8 (200) |
| Precast Reinforced Concrete Section | 36 (900)<br>4′-0″ (1.20 m) | 15 (380)<br>30 (760) | 3 (75)<br>4 (100) |
| Cast-in-Place Concrete | 36 (900)<br>4′-0″ (1.20 m) | 15 (380)<br>30 (760) | 6 (150)<br>6 (150) |

* For precast reinforced concrete sections, dimension "C" may vary from the dimension given to plus 6 (150).

## GENERAL NOTES

Bottom slabs shall be reinforced with a minimum of 0.20 sq. in./ft. (420 sq. mm/m) in both directions with a maximum spacing of 12 (300).

Bottom slabs may be connected to the riser as determined by the fabricator; however, only a single row of reinforcement around the perimeter may be utilized.

See Standard 602701 for details of steps.

See Standard 602601 for optional precast reinforced concrete flat slab top.

All dimensions are in inches (millimeters) unless otherwise shown.

Illinois Department of Transportation

PASSED January 1, 2011
Michael Brand
ENGINEER OF POLICY AND PROCEDURES

APPROVED January 1, 2011
Scott E. Stitt
ENGINEER OF DESIGN AND ENVIRONMENT

ISSUED 1-1-97

| DATE | REVISIONS |
|---|---|
| 1-1-11 | Detailed reinforcement in |
| | slabs. Revised general |
| | notes. |
| 1-1-09 | Switched units to |
| | English (metric). |
| | |

# CATCH BASIN TYPE D

**STANDARD 602016–02**

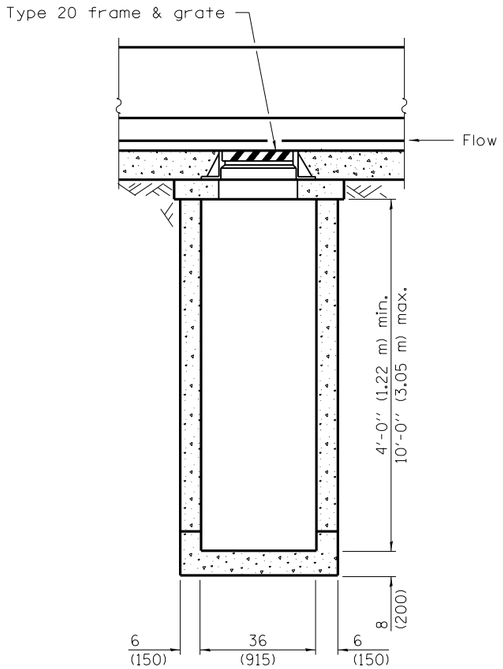


**FRONT ELEVATION – TYPE 1**

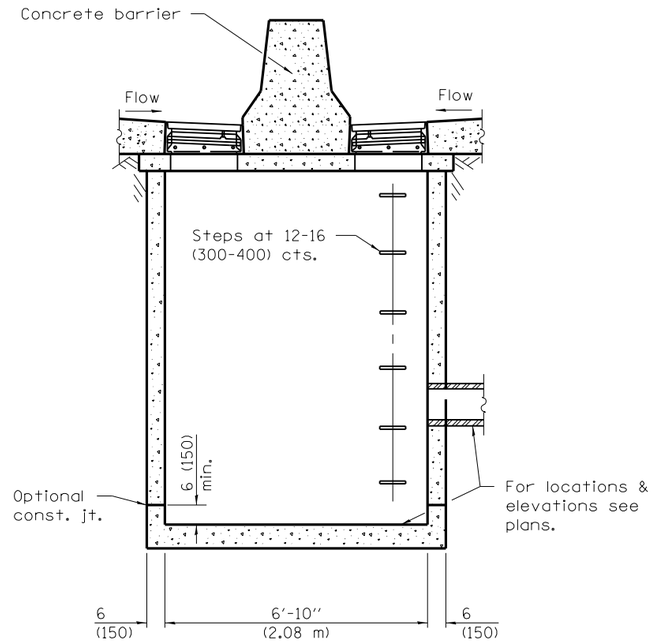


**SIDE ELEVATION – TYPE 1 & 2**

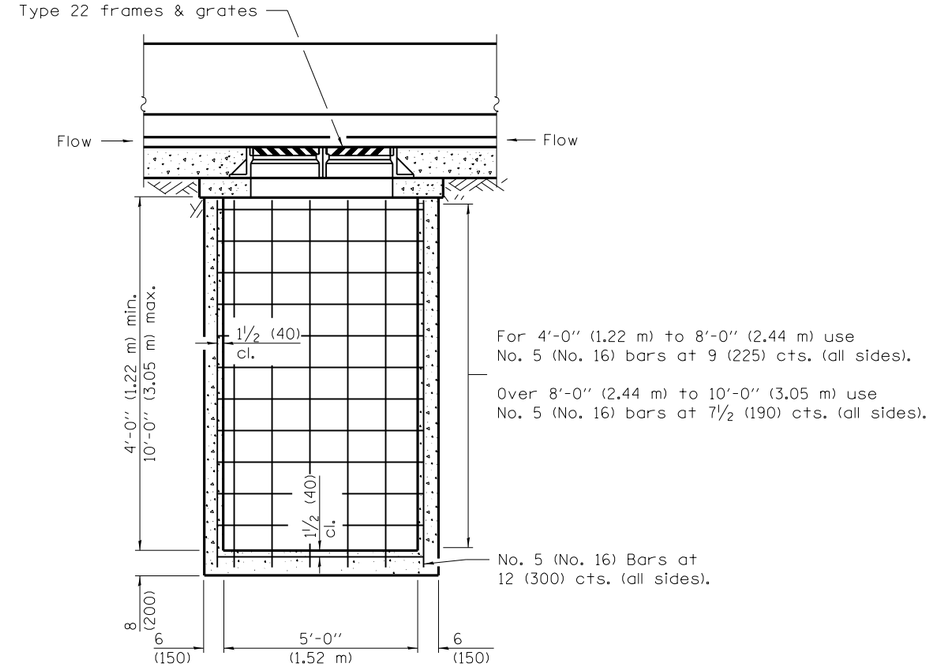


**FRONT ELEVATION – TYPE 2**

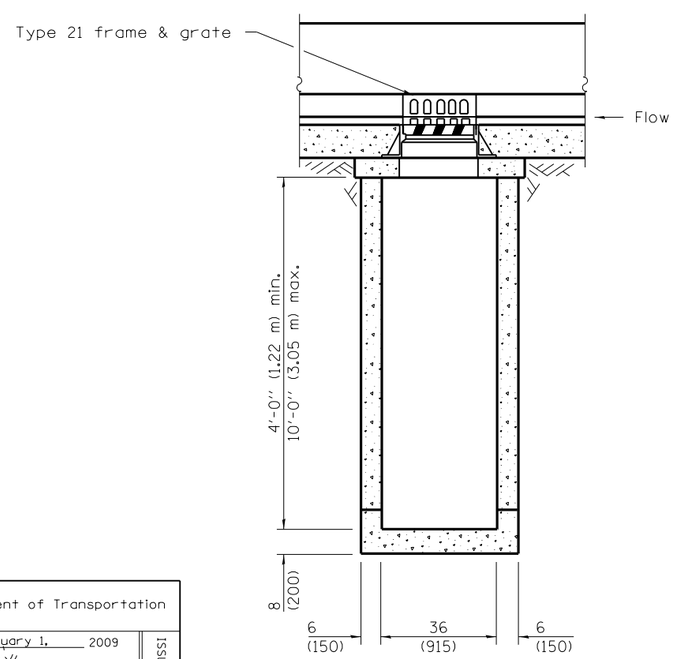


**FRONT ELEVATION – TYPE 3**

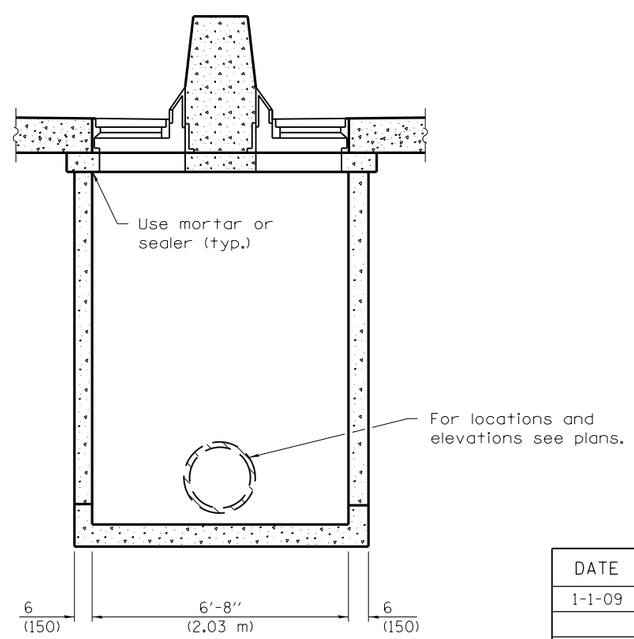


**SIDE ELEVATION – TYPE 3**

## GENERAL NOTES

These structures are for use with concrete barrier, double face, 32 (815) height (Standard 637001).

The reinforcement shown in the front elevation of the Type 2 is typical for both elevations of all types.

See Standard 602701 for details of steps.

Exposed edges shall be beveled ¾ (19).

All dimensions are in inches (millimeters) unless otherwise shown.

Illinois Department of Transportation

PASSED January 1, 2009
ENGINEER OF POLICY AND PROCEDURES
APPROVED January 1, 2009
ENGINEER OF DESIGN AND ENVIRONMENT

ISSUED 1-1-97

| DATE | REVISIONS |
|---|---|
| 1-1-09 | Switched units to |
| | English (metric). |
| | |
| 4-1-04 | Revised to fit F shape |
| | barrier. |
| | |

# DRAINAGE STRUCTURES TYPES 1, 2 & 3

(Sheet 1 of 2)

**STANDARD 602101–02**

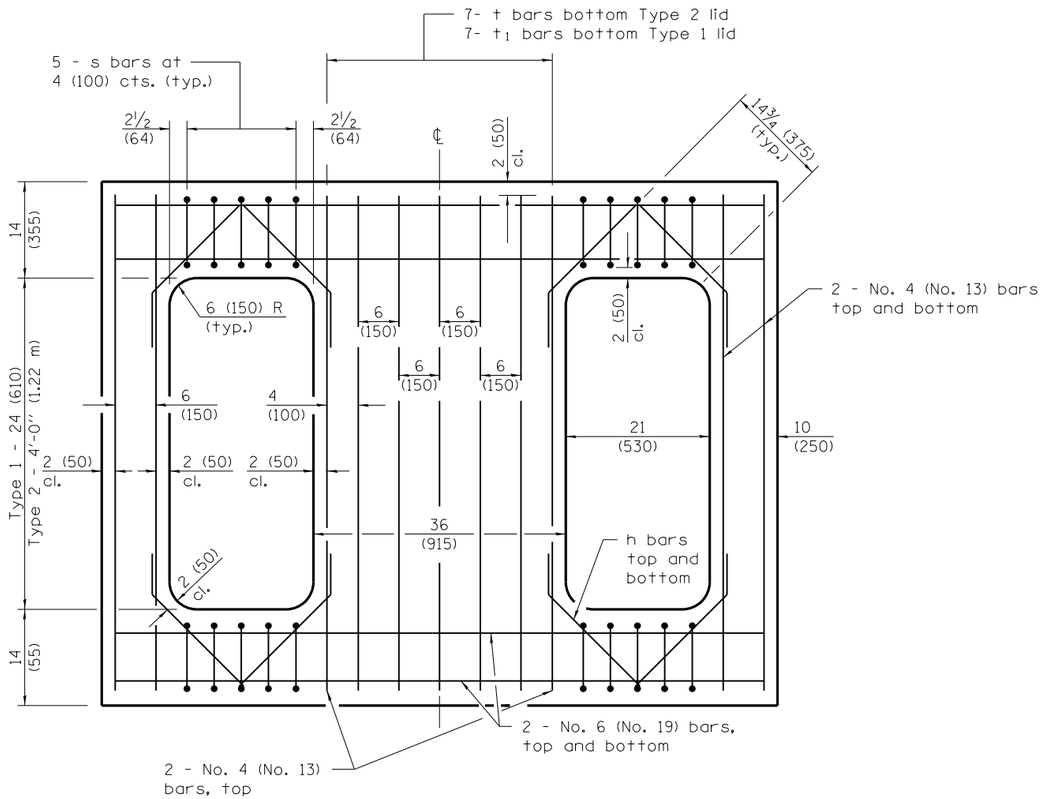


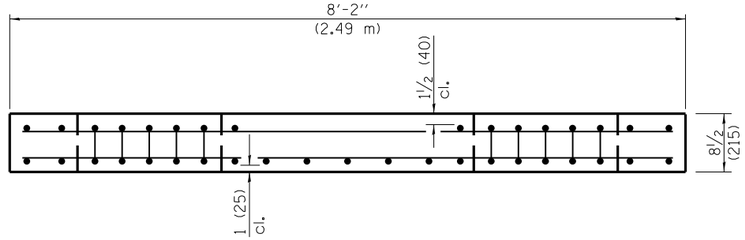


**REINFORCED LID – TYPE 1 & 2**

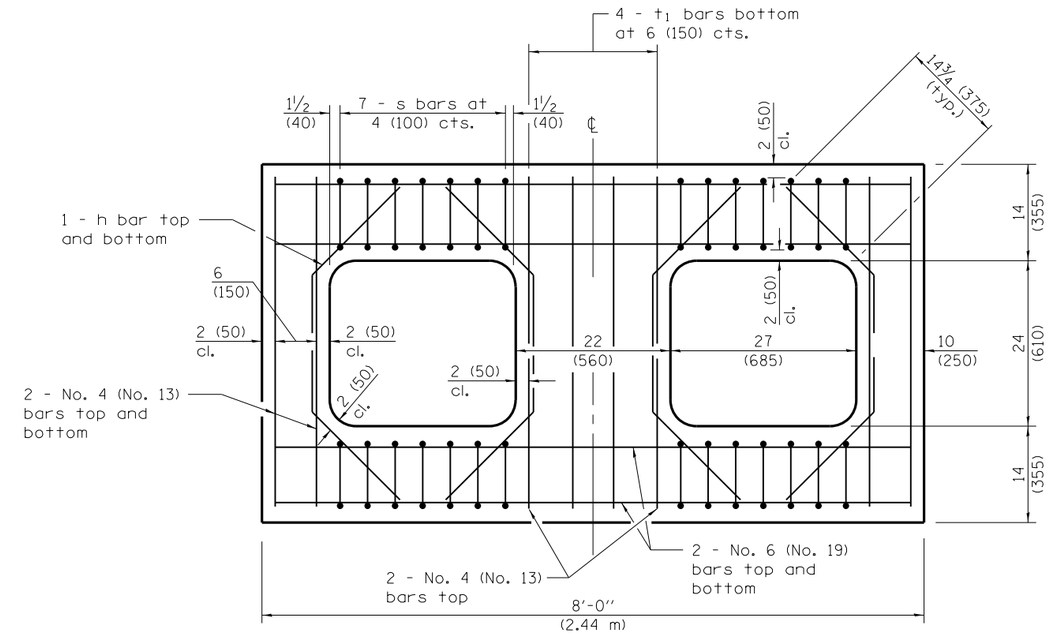


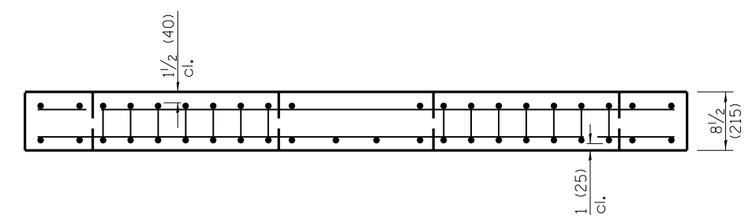


**REINFORCED LID – TYPE 3**

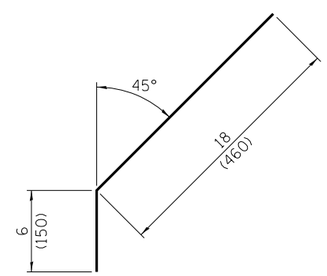


**No. 4 (No. 13) Bar h**

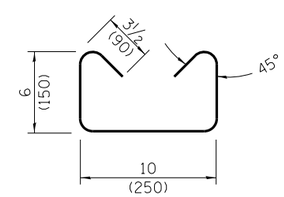


**No. 3 (No. 10) Bar s**

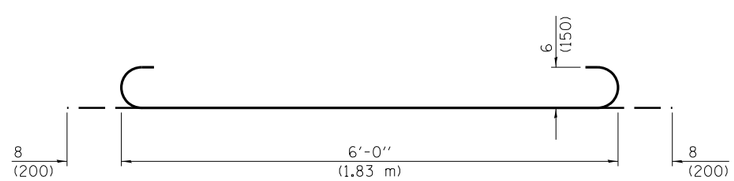


**No. 6 (No. 19) Bar t**

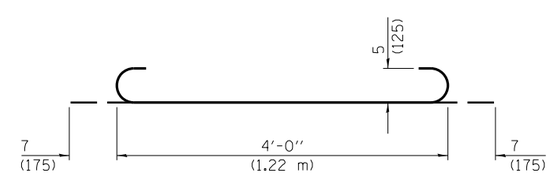


**No. 5 (No. 16) Bar t1**

Illinois Department of Transportation

PASSED January 1, 2009
ENGINEER OF POLICY AND PROCEDURES
APPROVED January 1, 2009
ENGINEER OF DESIGN AND ENVIRONMENT

ISSUED 1-1-97

# DRAINAGE STRUCTURES TYPES 1, 2 & 3

(Sheet 2 of 2)

STANDARD 602101–02

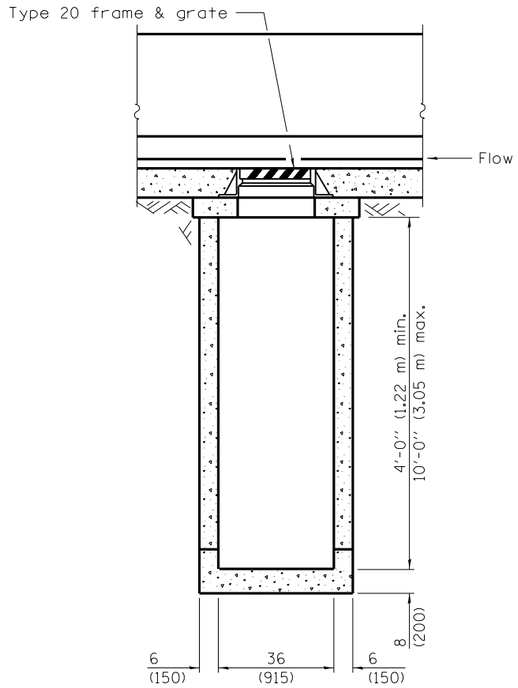


**FRONT ELEVATION – TYPE 4**

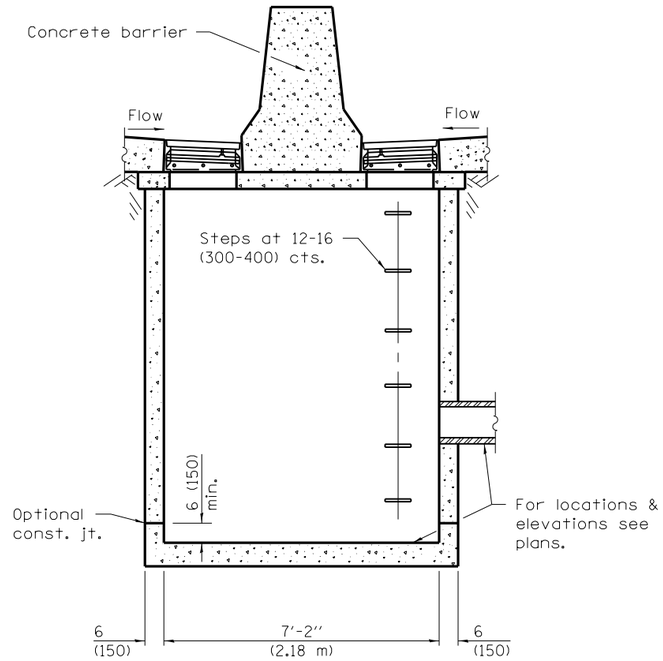


**SIDE ELEVATION – TYPE 4 & 5**

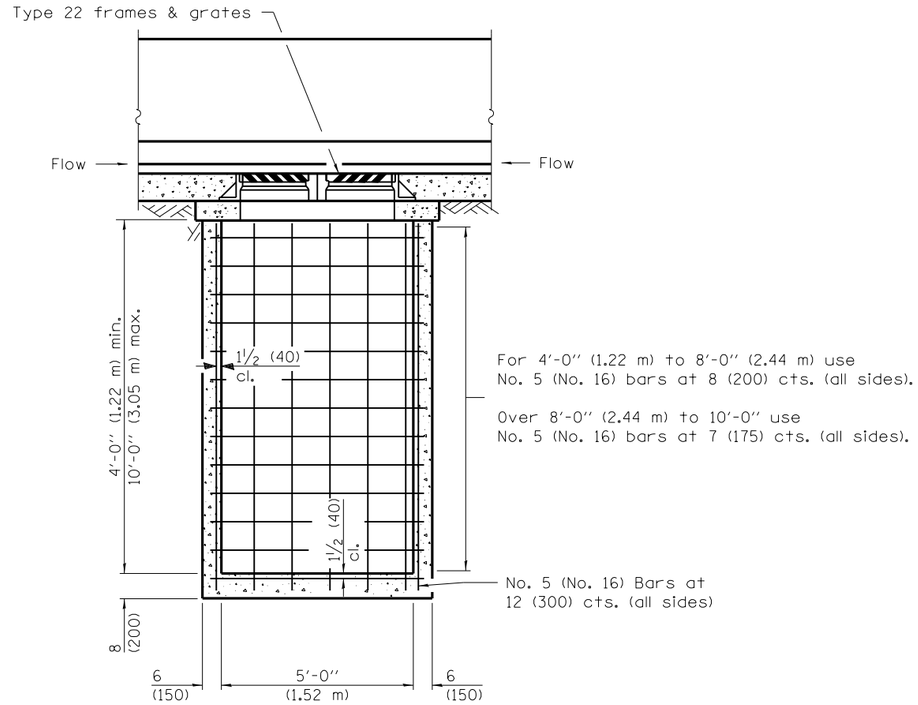


**FRONT ELEVATION – TYPE 5**

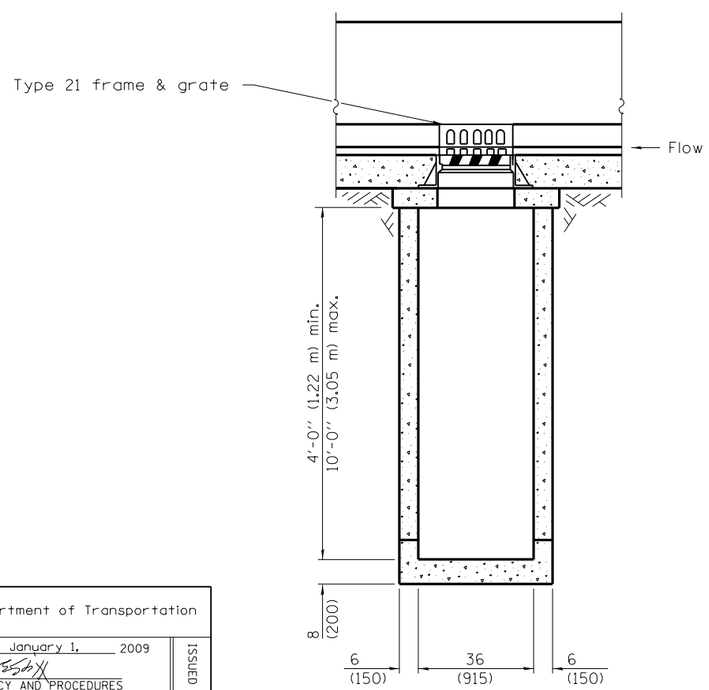


**FRONT ELEVATION – TYPE 6**

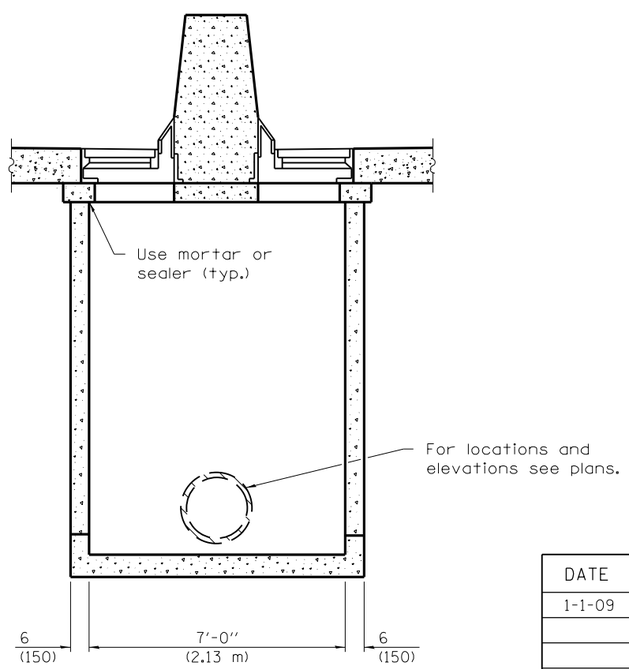


**SIDE ELEVATION – TYPE 6**

## GENERAL NOTES

These structures are for use with concrete barrier, double face, 42 (1065) height (Standard 637006).

The reinforcement shown in the front elevation of the Type 5 is typical for both elevations of all types.

See Standard 602701 for details of steps.

Exposed edges shall be beveled ¾ (19).

All dimensions are in inches (millimeters) unless otherwise shown.

Illinois Department of Transportation

PASSED January 1, 2009
ENGINEER OF POLICY AND PROCEDURES

APPROVED January 1, 2009
ENGINEER OF DESIGN AND ENVIRONMENT

ISSUED 4-1-04

| DATE | REVISIONS |
|---|---|
| 1-1-09 | Switched units to |
| | English (metric). |
| | |
| 1-1-04 | New standard |
| | |
| | |

# DRAINAGE STRUCTURES TYPES 4, 5 & 6

(Sheet 1 of 2)

**STANDARD 602106–01**

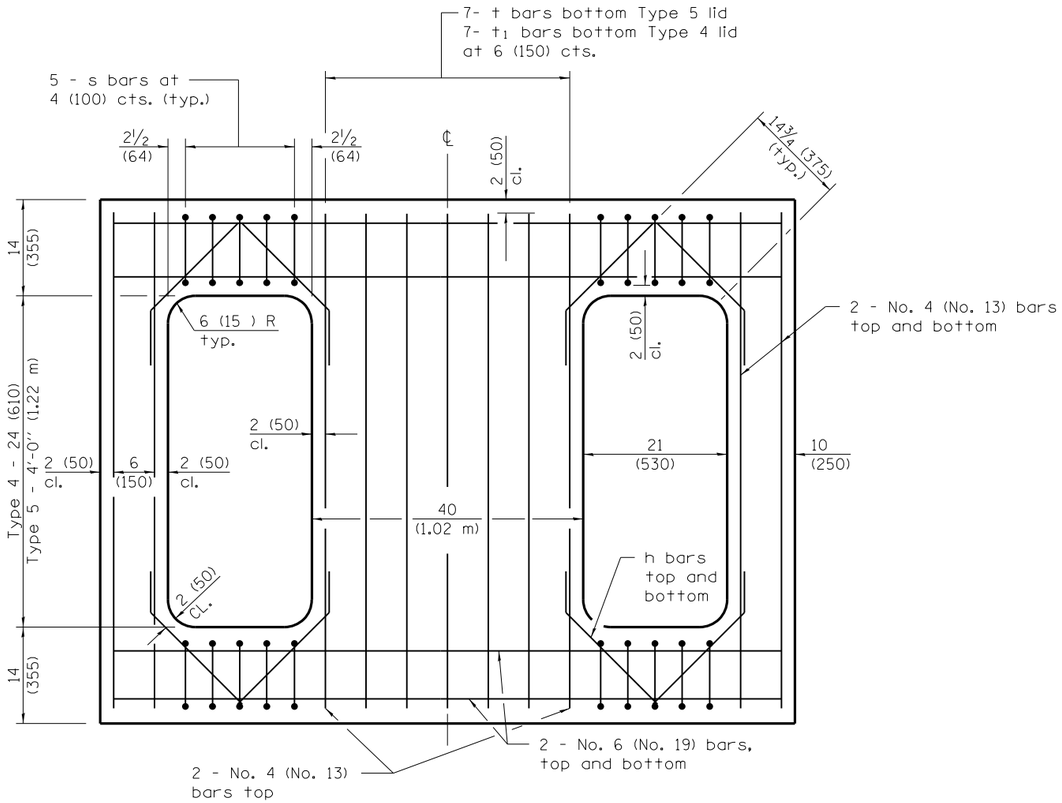


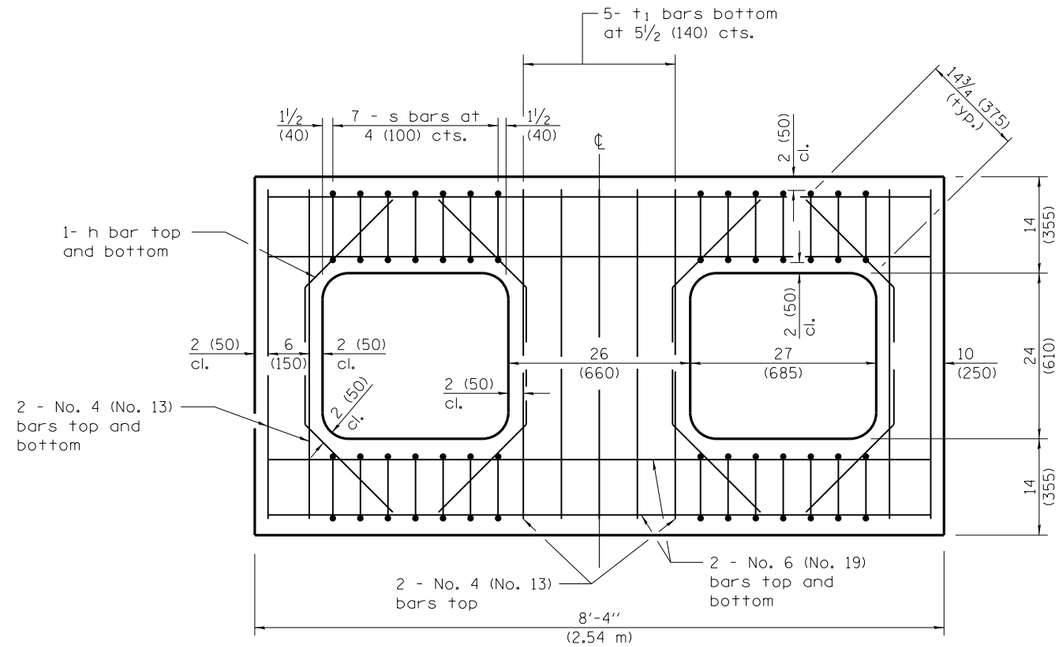


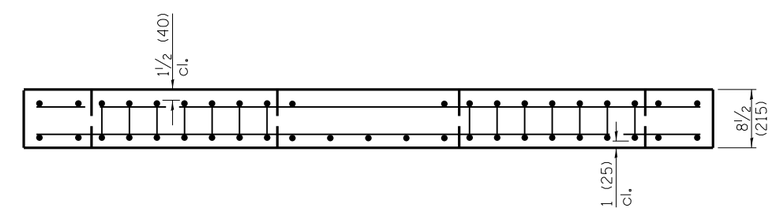


**REINFORCED LID – TYPE 6**

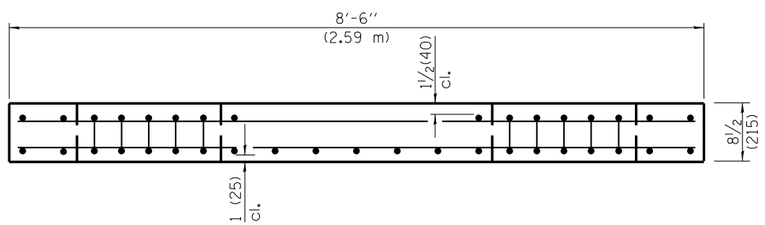


**REINFORCED LID – TYPE 4 & 5**

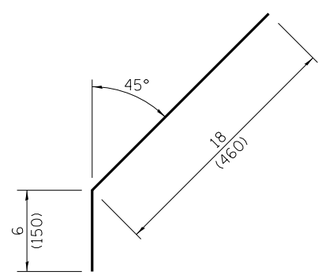


**No. 4 (No. 13) Bar h**

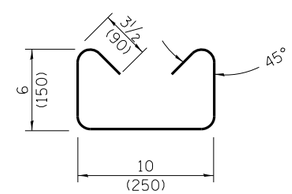


**No. 3 (No. 10) Bar s**

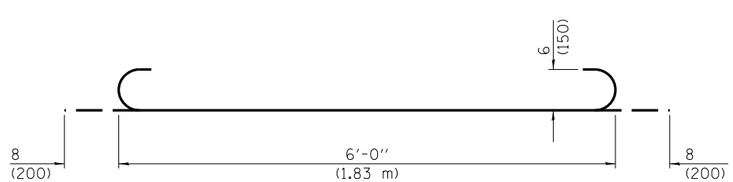


**No. 6 (No. 19) Bar t**

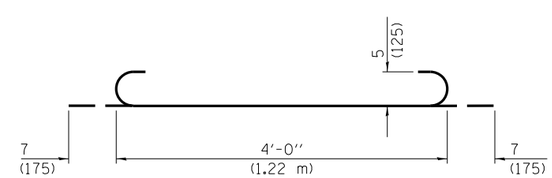


**No. 5 (No. 16) Bar t1**

Illinois Department of Transportation

PASSED January 1, 2009
ENGINEER OF POLICY AND PROCEDURES
APPROVED January 1, 2009
ENGINEER OF DESIGN AND ENVIRONMENT

ISSUED 4-1-04

# DRAINAGE STRUCTURES TYPES 4, 5 & 6

(Sheet 2 of 2)

STANDARD 602106-01

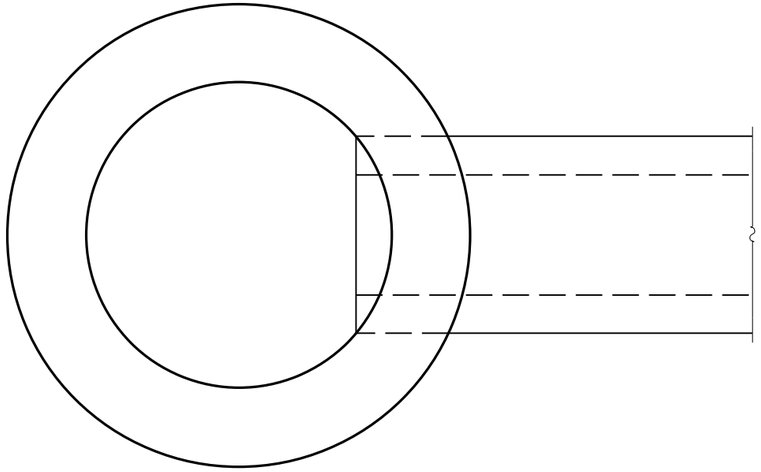

**PLAN**

| ALTERNATE MATERIALS FOR WALLS | T |
|---|---|
| BRICK MASONRY | 8 (200) |
| CAST-IN-PLACE CONCRETE | 6 (150) |
| CONCRETE MASONRY UNIT | 5 (125) |
| PRECAST REINFORCED CONCRETE SECTION | 3 (75) |

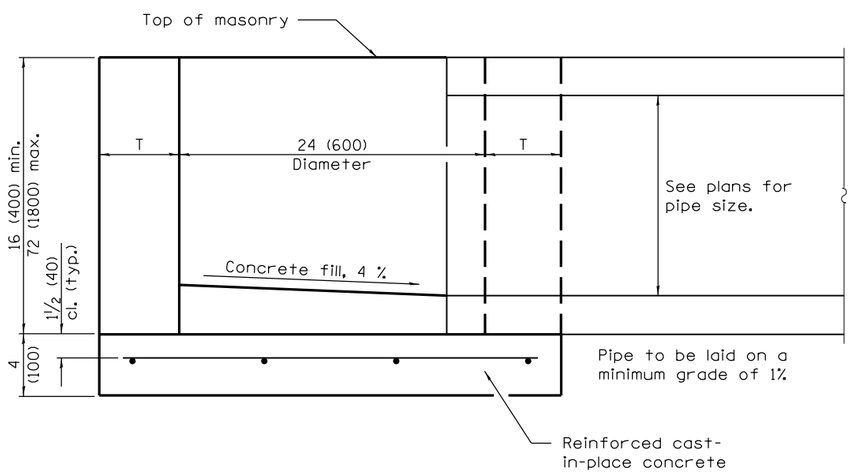


**ELEVATION**

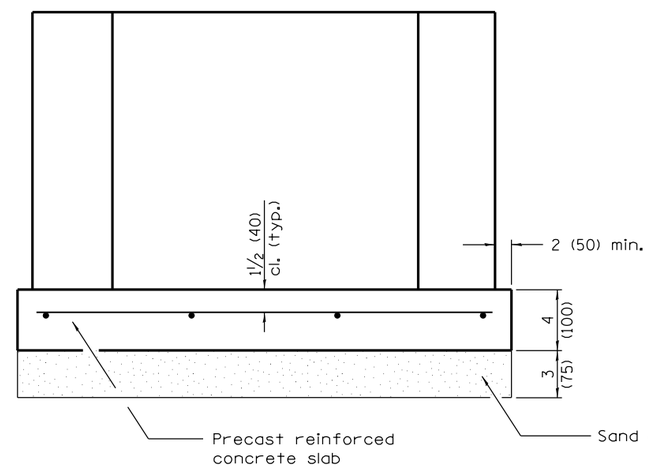


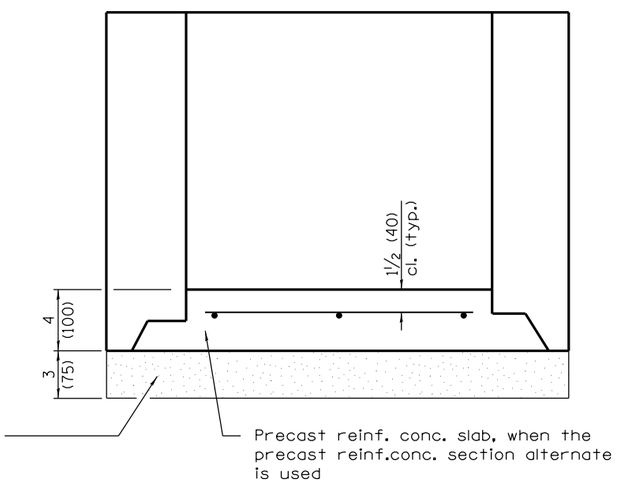


**ALTERNATE METHODS**

## GENERAL NOTES

Bottom slabs shall be reinforced with a minimum of 0.24 sq. in./ft. (510 sq. mm/m) in both directions with a maximum spacing of 10 (250).

Bottom slabs may be connected to the riser as determined by the fabricator; however, only a single row of reinforcement around the perimeter may be utilized.

All dimensions are in inches (millimeters) unless otherwise shown.

Illinois Department of Transportation

PASSED January 1, 2014
Michael Brand
ENGINEER OF POLICY AND PROCEDURES
APPROVED January 1, 2014
ENGINEER OF DESIGN AND ENVIRONMENT

ISSUED 1-1-97

| DATE | REVISIONS |
|---|---|
| 1-1-14 | Increased height to |
| | 72 (1800) maximum. |
| | |
| 1-1-11 | Detailed rein. in slabs. |
| | Added max. limit to height. |
| | Added general notes. |

# INLET – TYPE A

**STANDARD 602301–04**

• For precast reinforced concrete sections, this dimension may vary from the dimension given to plus 6 (150).

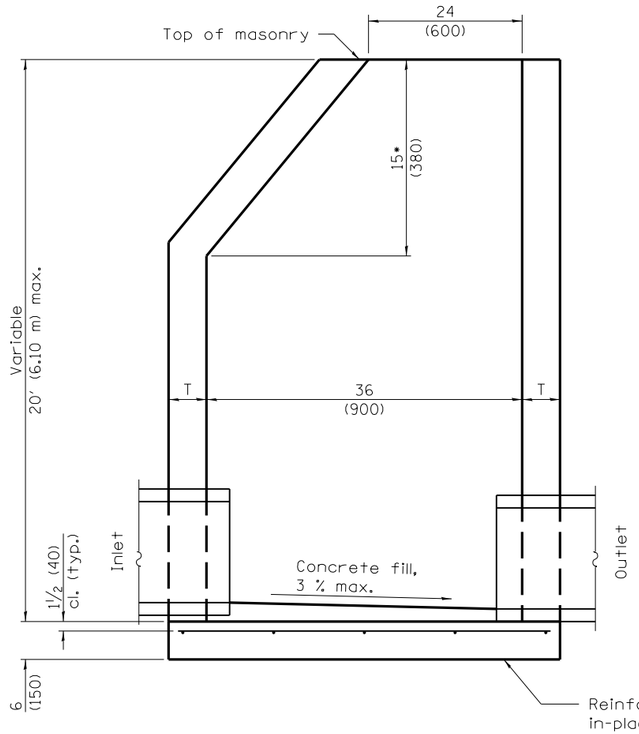


**ELEVATION – ECCENTRIC**

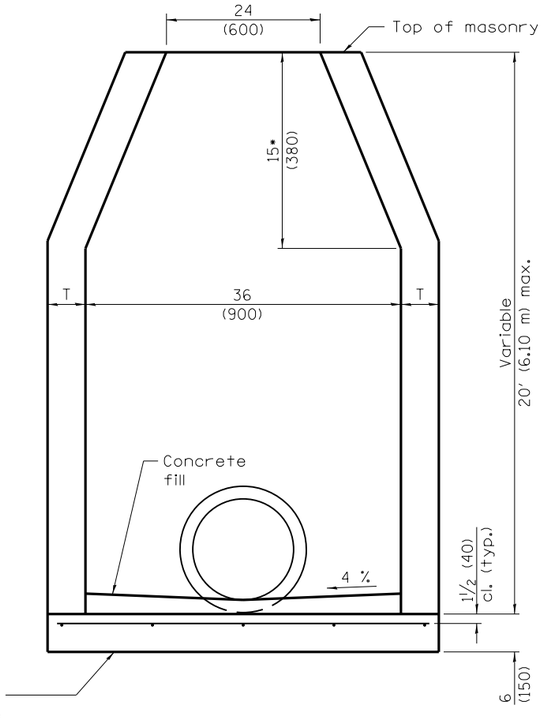


**ELEVATION – CONCENTRIC**

| ALTERNATE MATERIALS FOR WALLS | T (min.) |
|---|---|
| Concrete Masonry Unit | 5 (125) |
| Brick Masonry | 8 (200) |
| Precast Reinforced Concrete Section | 3 (75) |
| Cast-in-Place Concrete | 6 (150) |

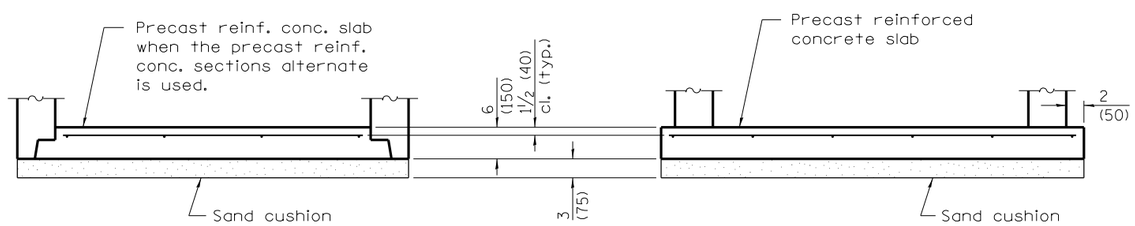


**ALTERNATE BOTTOM SLAB**

## GENERAL NOTES

Bottom slabs shall be reinforced with a minimum of 0.20 sq. in./ft. (420 sq. mm/m) in both directions with a maximum spacing of 12 (300).

Bottom slabs may be connected to the riser as determined by the fabricator; however, only a single row of reinforcement around the perimeter may be utilized.

See Standard 602601 for optional Precast Reinforced Concrete Flat Slab Top.

All dimensions are in inches (millimeters) unless otherwise shown.

Illinois Department of Transportation

PASSED January 1, 2011
Michael Brand
ENGINEER OF POLICY AND PROCEDURES

APPROVED January 1, 2011
ENGINEER OF DESIGN AND ENVIRONMENT

ISSUED 1-1-97

| DATE | REVISIONS |
|---|---|
| 1-1-11 | Detailed rein. in slabs. |
| | Added max. limit to height. |
| | Revised general notes. |
| 1-1-09 | Switched units to |
| | English (metric). |
| | |

# INLET – TYPE B

**STANDARD 602306–03**

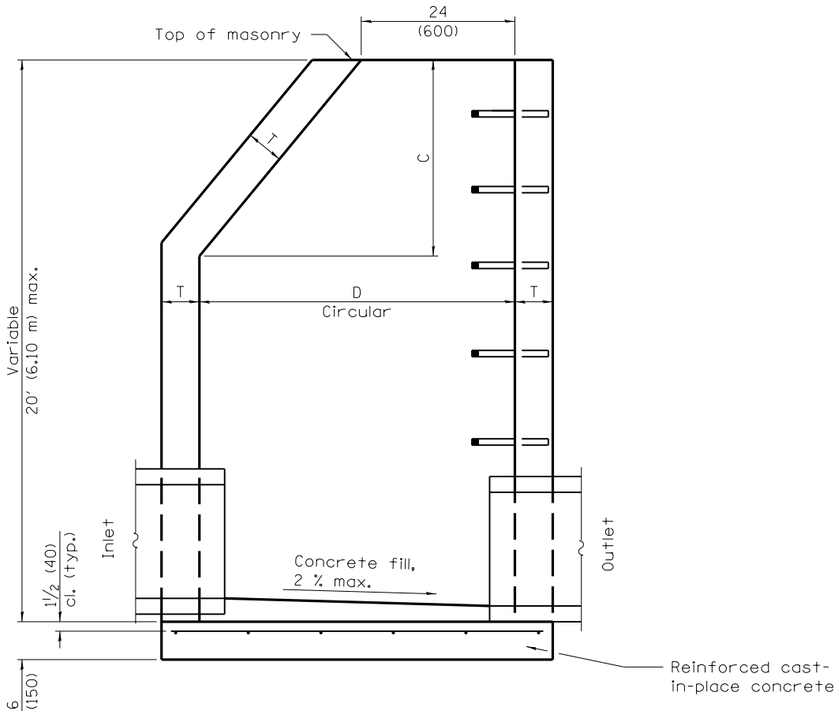


**ELEVATION – ECCENTRIC**

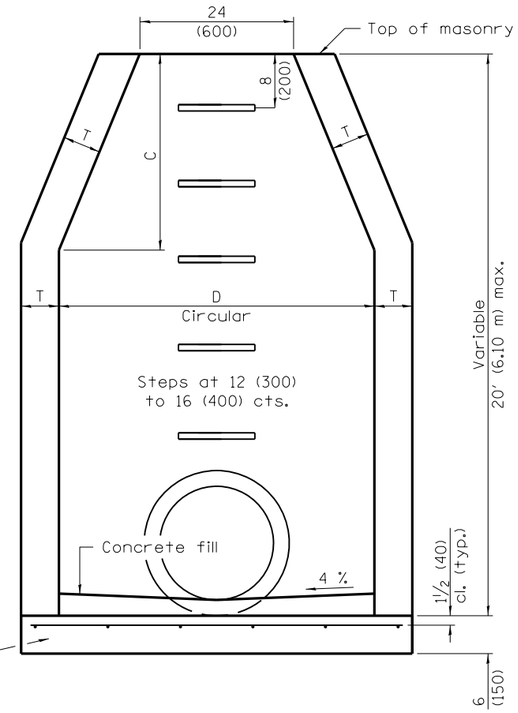


**ELEVATION – CONCENTRIC**

| ALTERNATE MATERIALS FOR WALLS | D | C* | T (min.) |
|---|---|---|---|
| Concrete Masonry Unit | 4'-0" (1.2 m)<br>5'-0" (1.5 m) | 30 (750)<br>3'-9" (1.15 m) | 5 (125)<br>5 (125) |
| Brick Masonry | 4'-0" (1.2 m)<br>5'-0" (1.5 m) | 30 (750)<br>3'-9" (1.15 m) | 8 (200)<br>8 (200) |
| Precast Reinforced Concrete Section | 4'-0" (1.2 m)<br>5'-0" (1.5 m) | 30 (750)<br>3'-9" (1.15 m) | 4 (100)<br>5 (125) |
| Cast-in-place Concrete | 4'-0" (1.2 m)<br>5'-0" (1.5 m) | 30 (750)<br>3'-9" (1.15 m) | 6 (150)<br>6 (150) |

* For precast reinforced concrete sections, dimension "C" may vary from the dimension given to plus 6 (150).

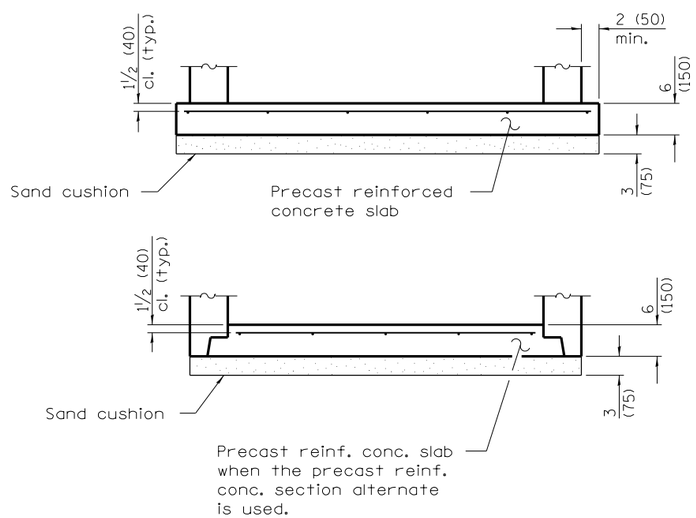


**ALTERNATE BOTTOM SLAB**

## GENERAL NOTES

Bottom slabs shall be reinforced with a minimum of 0.31 sq. in./ft. (660 sq. mm/m) in both directions with a maximum spacing of 12 (300).

Bottom slabs may be connected to the riser as determined by the fabricator; however, only a single row of reinforcement around the perimeter may be utilized.

See Standard 602701 for details of steps.

See Standard 602601 for optional Precast Reinforced Concrete Flat Slab Top.

All dimensions are in inches (millimeters) unless otherwise shown.

Illinois Department of Transportation

PASSED January 1, 2011
Michael Brand
ENGINEER OF POLICY AND PROCEDURES
APPROVED January 1, 2011
ENGINEER OF DESIGN AND ENVIRONMENT

ISSUED 1-1-97

| DATE | REVISIONS |
|---|---|
| 1-1-11 | Detailed rein. in slabs. |
| | Added max. limit to height. |
| | Revised general notes. |
| 1-1-09 | Switched units to |
| | English (metric). |
| | |

# MANHOLE TYPE A

**STANDARD 602401–03**

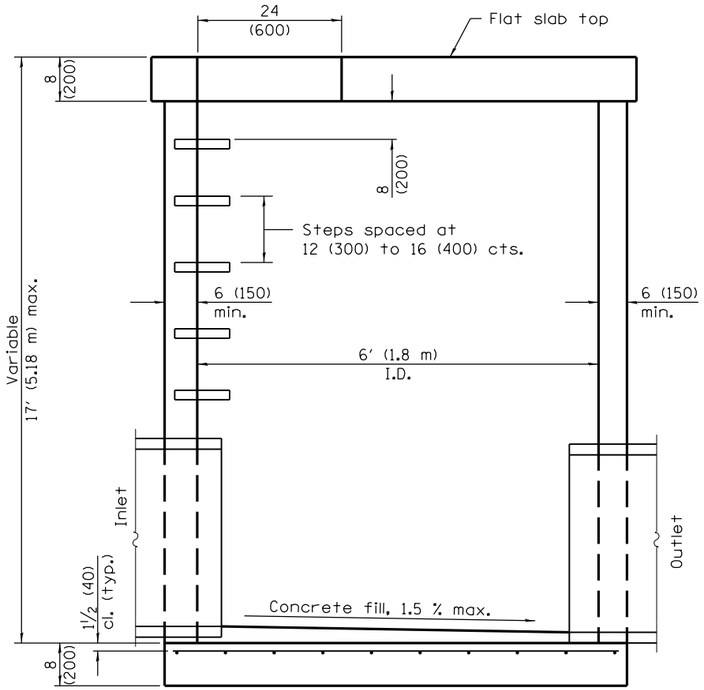


## ELEVATION
(with flat slab top only)

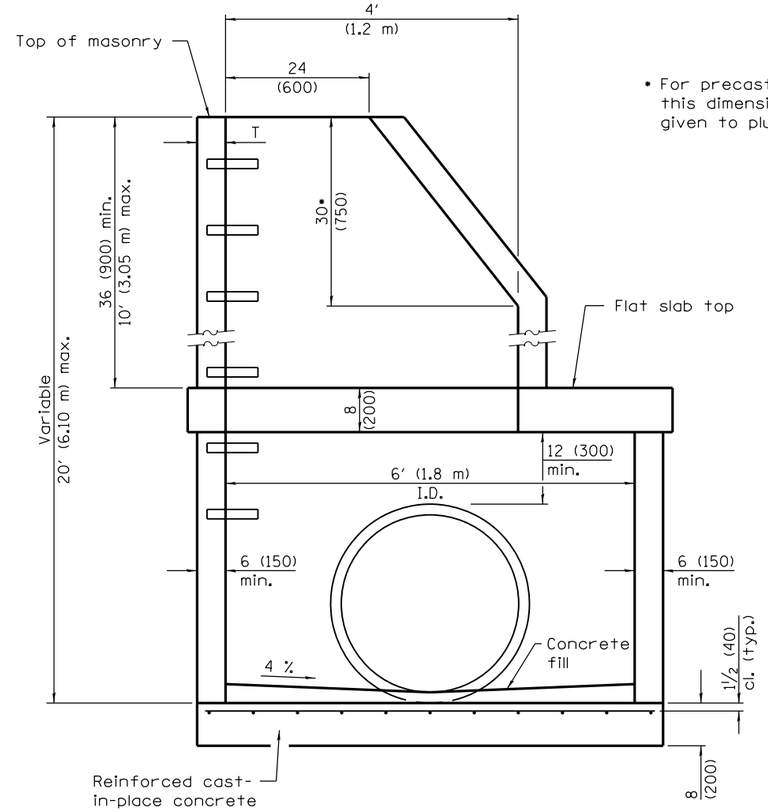


• For precast reinforced concrete sections, this dimension may vary from the dimension given to plus 6 (150).

## ELEVATION
(with flat slab top and riser)

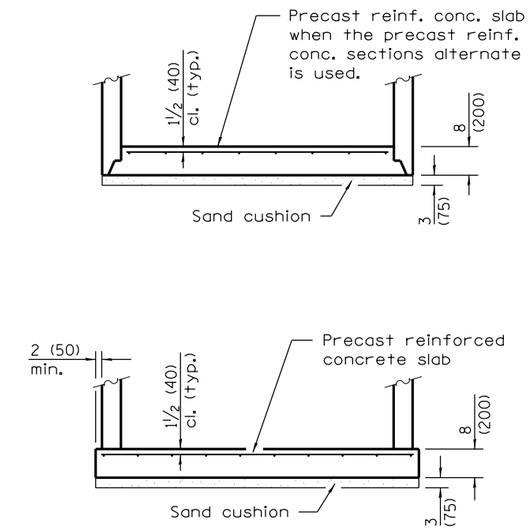


## ALTERNATE BOTTOM SLABS

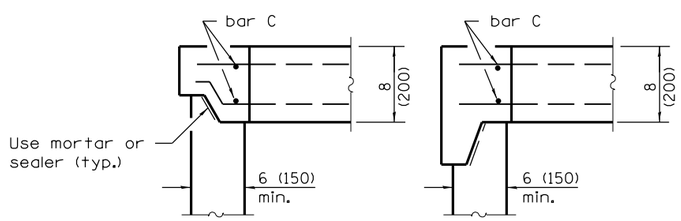


## ALTERNATE JOINT CONFIGURATIONS

| ALTERNATE MATERIALS FOR WALLS | T (min) |
|---|---|
| Concrete Masonry Units | 5 (125) |
| Precast Reinforced Concrete Sections | 4 (100) |
| Cast-in-Place Concrete | 6 (150) |

## GENERAL NOTES

Joint configuration and dimensions of flat slab top shall match and fit the riser joint detail.

Bottom slabs shall be reinforced with a minimum of 0.29 sq. in./ft. (610 sq. mm /m) in both directions with a maximum spacing of 13 (330)

Bottom slabs may be connected to the riser as determined by the fabricator; however, only a single row of reinforcement around the perimeter may be utilized.

See Standard 602701 for details of manhole steps.

All dimensions are in inches (millimeters) unless otherwise shown.

Illinois Department of Transportation

PASSED April 1, 2016
Michael Brand
ENGINEER OF POLICY AND PROCEDURES
APPROVED April 1, 2016
ENGINEER OF DESIGN AND ENVIRONMENT

ISSUED 1-1-97

| DATE | REVISIONS |
|---|---|
| 4-1-16 | Changed terminology to |
| | 'welded wire reinforcement'. |
| | |
| 1-1-14 | Increased maximum heights. |
| | Revised General Notes. |
| | |

# MANHOLE TYPE A
# 6′ (1.8 m) DIAMETER

(Sheet 1 of 2)

**STANDARD 602406–07**

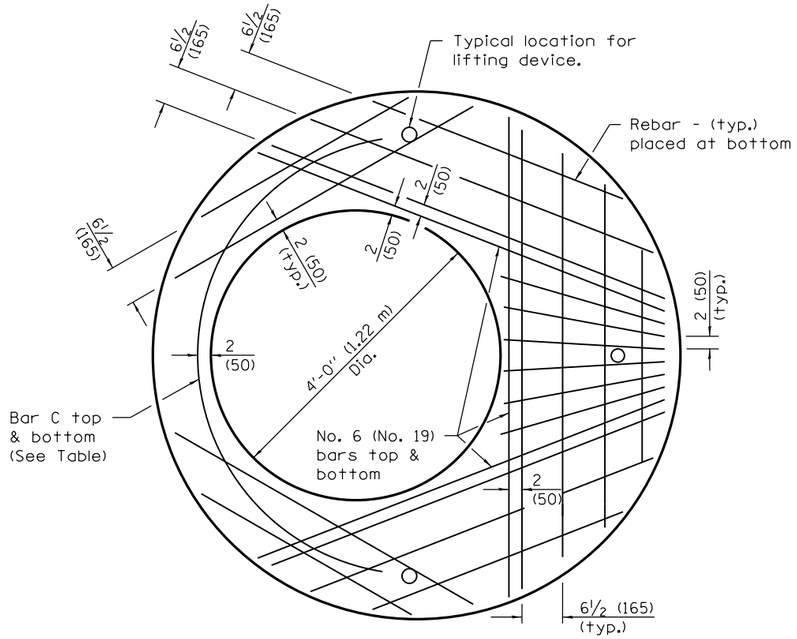


**PLAN**

Showing Rebar Reinforcement

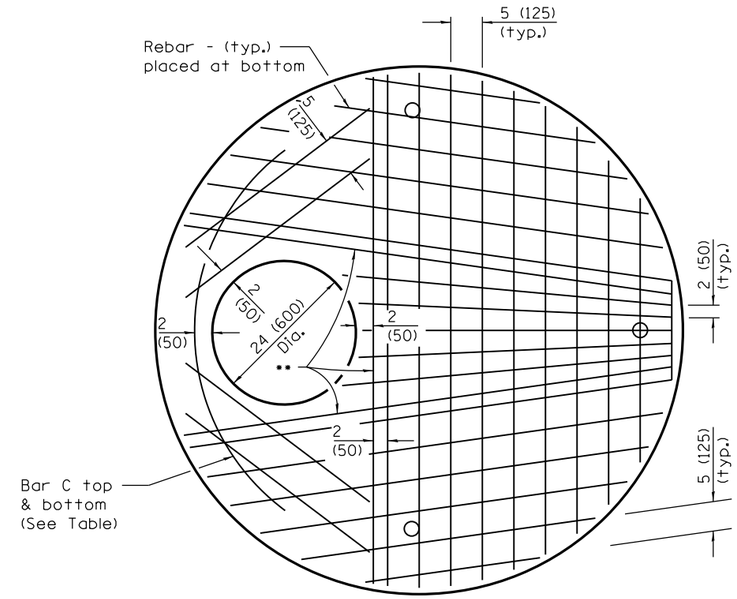


•• No. 6 (No. 19) bars top & bottom

| Diameter of opening | Thickness | Reinforcement "As" WWR Each direction | Bar Size | No. 4 (No. 13) Bar C | |
|---|---|---|---|---|---|
| | | | | Length | Radius |
| 24 (600) | 8 (200) | 1.06 sq. in./ft. (2244 sq. mm/m) | No. 6 (No. 19) | 6'-0" (1.83 m) | 38 (965) |
| 4'-0" (1.2 m) | 8 (200) | 0.82 sq. in./ft/ (1736 sq. mm/m) | No. 6 (No. 19) | 9'-0" (2.74 m) | 38 (965) |

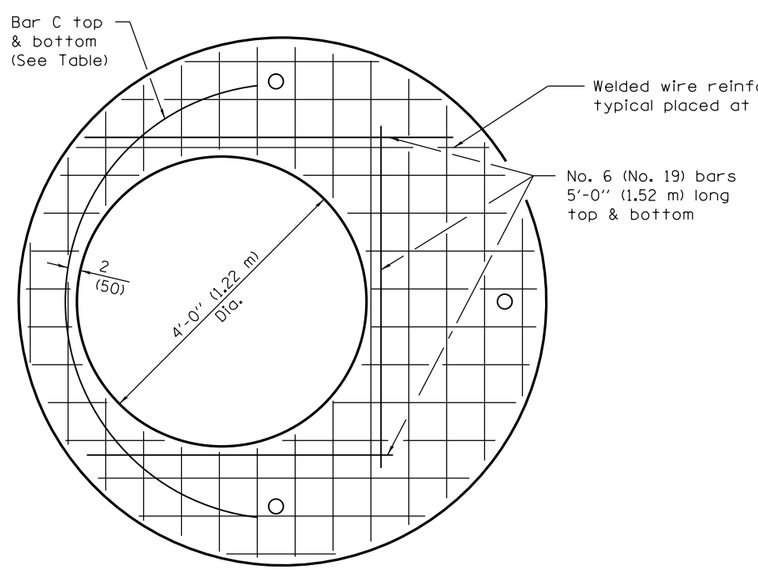


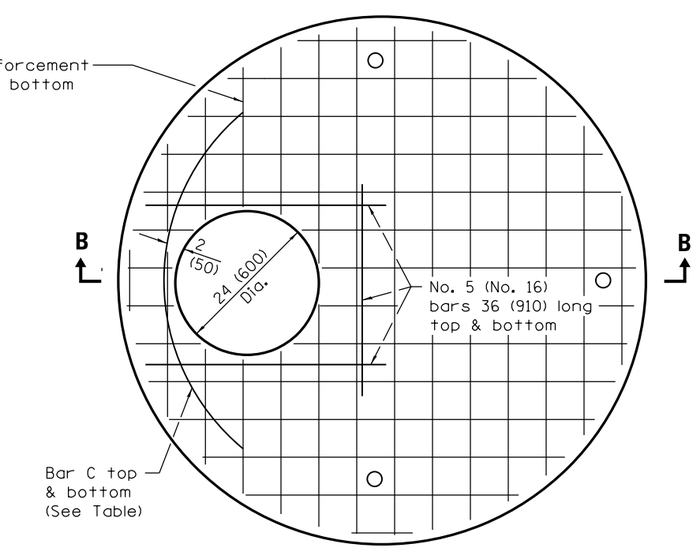


**PLAN**

Showing Welded Wire Fabric Reinforcement

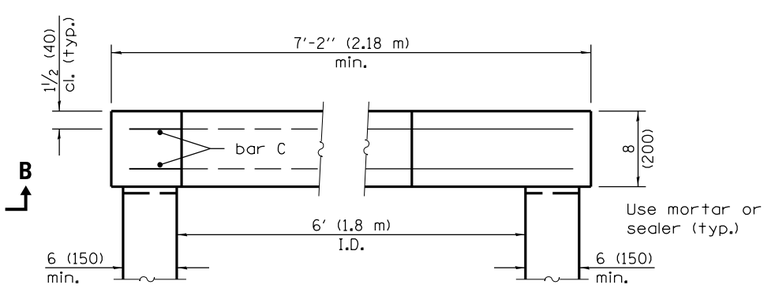


**SECTION B–B**

Illinois Department of Transportation

PASSED April 1, 2016

Michael Brand
ENGINEER OF POLICY AND PROCEDURES

APPROVED April 1, 2016

ENGINEER OF DESIGN AND ENVIRONMENT

ISSUED 1-1-97

# MANHOLE TYPE A
# 6' (1.8 m) DIAMETER

(Sheet 2 of 2)

**STANDARD 602406–07**

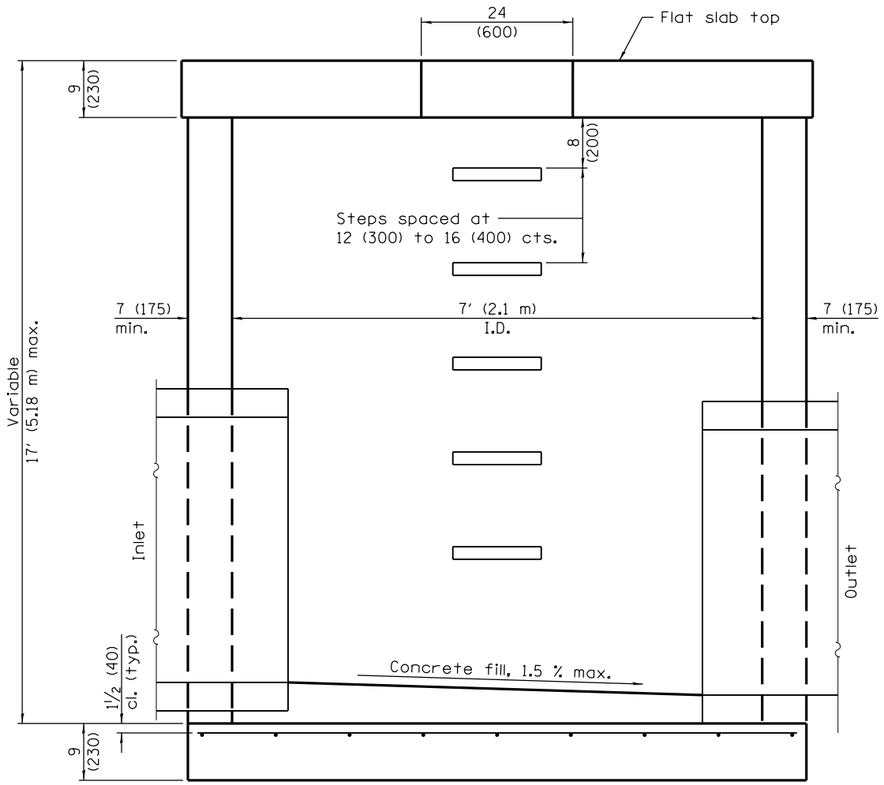


**ELEVATION**

(With Flat Slab Top Only)

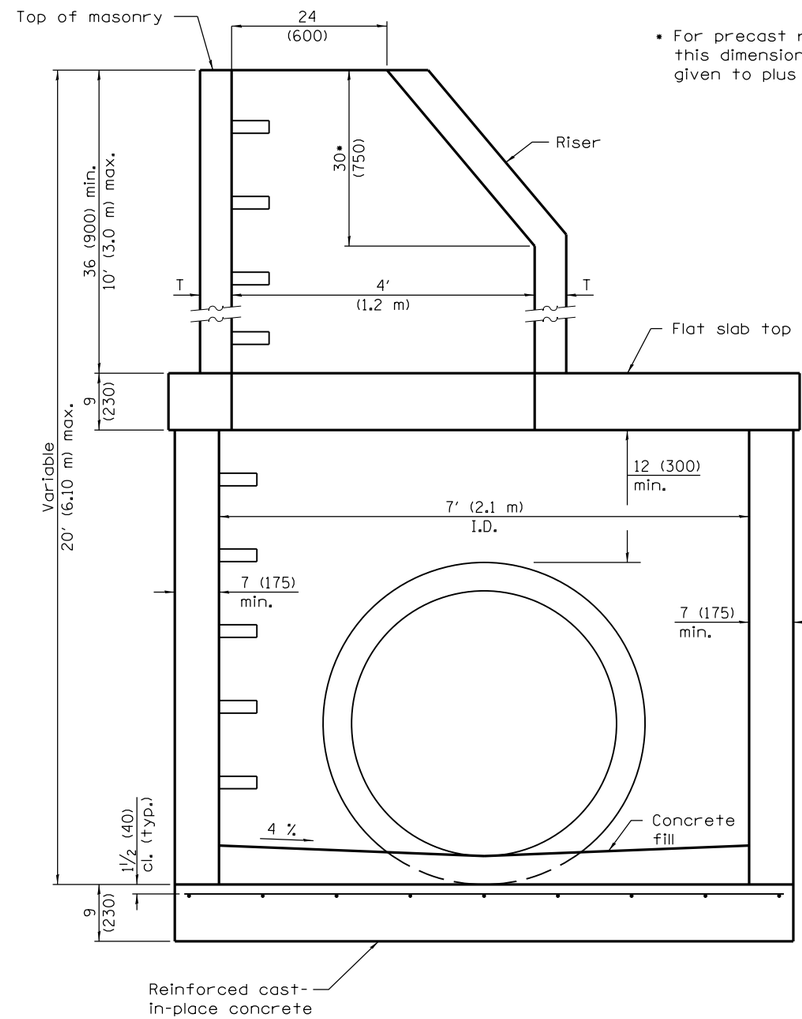


**ELEVATION**

(With Flat Slab Top and Riser)

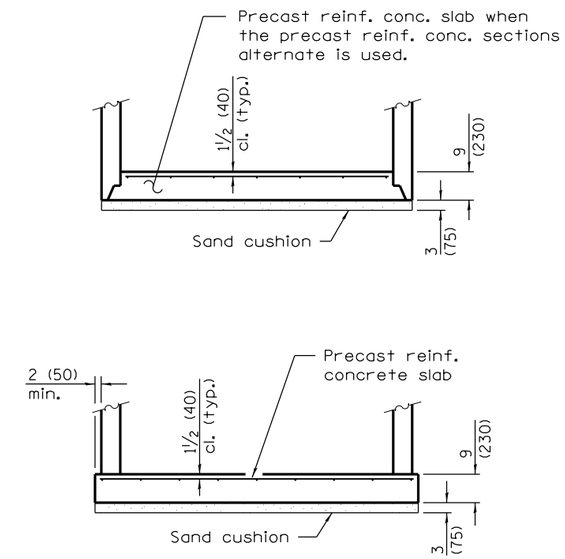


**ALTERNATE BOTTOM SLABS**

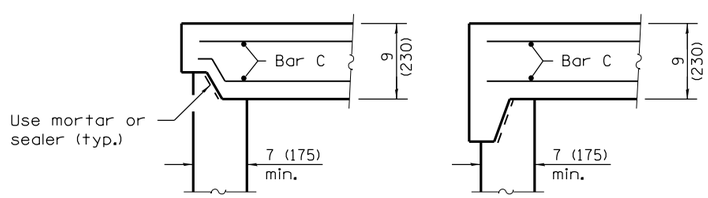


**ALTERNATE JOINT CONFIGURATIONS**

| ALTERNATE MATERIALS FOR RISER WALLS | T (min) |
|---|---|
| Concrete Masonry Units | 5 (125) |
| Precast Reinforced Concrete Sections | 4 (100) |
| Cast-in-Place Concrete | 6 (150) |

## GENERAL NOTES

Joint configuration and dimensions of flat slab top shall match and fit the riser joint detail.

Bottom slabs shall be reinforced with a minimum of 0.31 sq. in./ft. (660 sq. mm/m) in both directions with a maximum spacing of 12 (300).

Bottom slabs may be connected to the riser as determined by the fabricator; however, only a single row of reinforcement around the perimeter may be utilized.

See Standard 602701 for details of manhole steps.

All dimensions are in inches (millimeters) unless otherwise shown.

Illinois Department of Transportation

PASSED April 1, 2016

Michael Brand

ENGINEER OF POLICY AND PROCEDURES

APPROVED April 1, 2016

ENGINEER OF DESIGN AND ENVIRONMENT

ISSUED 4-1-06

| DATE | REVISIONS |
|---|---|
| 4-1-16 | Changed terminology to |
| | 'welded wire reinforcement'. |
| | |
| 1-1-14 | Increased maximum heights. |
| | Revised General Notes. |
| | |

# MANHOLE TYPE A
# 7′ (2.1 m) DIAMETER

(Sheet 1 of 2)

**STANDARD 602411–05**

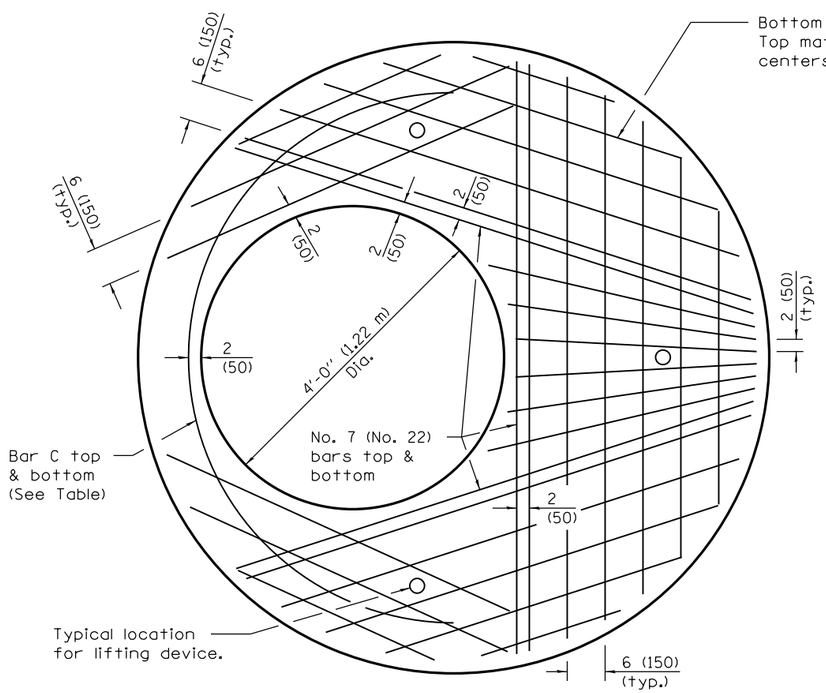


**PLAN**
Showing Rebar Reinforcement

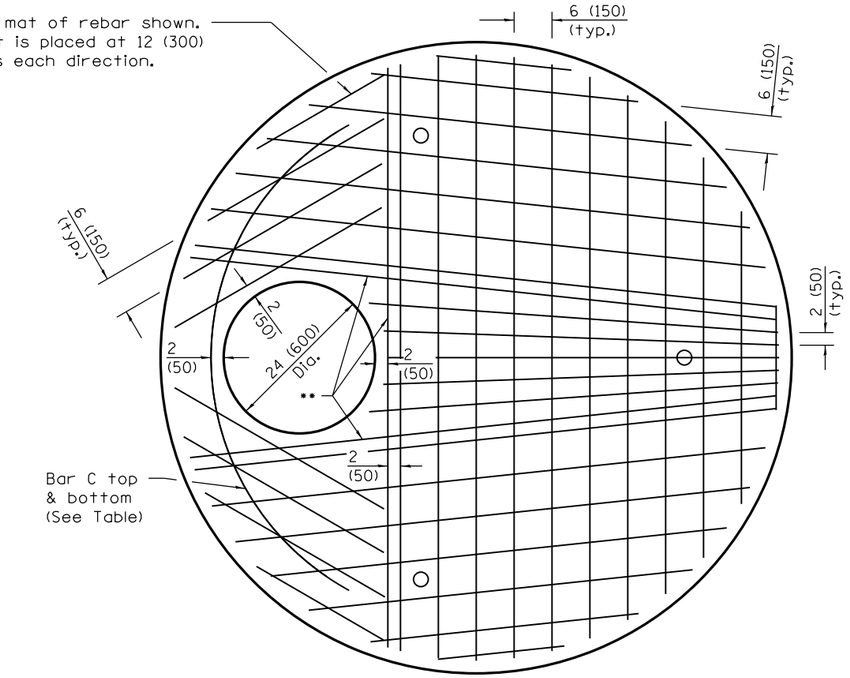


•• No. 8 (No. 25) bars
top & bottom

| Diameter of opening | Reinforcement Bar Size | Reinforcement "As" WWR each direction | No. 4 (No. 13) Bar C | |
|---|---|---|---|---|
| | | | Length | Radius |
| 24 (600) | Bottom mat No. 8 (No. 25) | Bottom mat •••• 1.57 sq. in./ft. (3325 sq. mm/m) | 7'-6" (2.30 m) | 3'-6" (1.067 m) |
| | Top mat No. 4 (No. 13) | Top mat •••• 0.20 sq. in./ft. (425 sq. mm/m) | | |
| 4'-0" (1.2 m) | Bottom mat No. 7 (No. 22) | Bottom mat •••• 1.20 sq. in./ft. (2540 sq. mm/m) | 11'-0" (3.35 m) | 3'-6" (1.067 m) |
| | Top mat No. 4 (No. 13) | Top mat •••• 0.20 sq. in./ft. (425 sq. mm/m) | | |

•••• A maximum of two layers of welded wire reinforcement may be used to satisfy the required "As" for each mat.

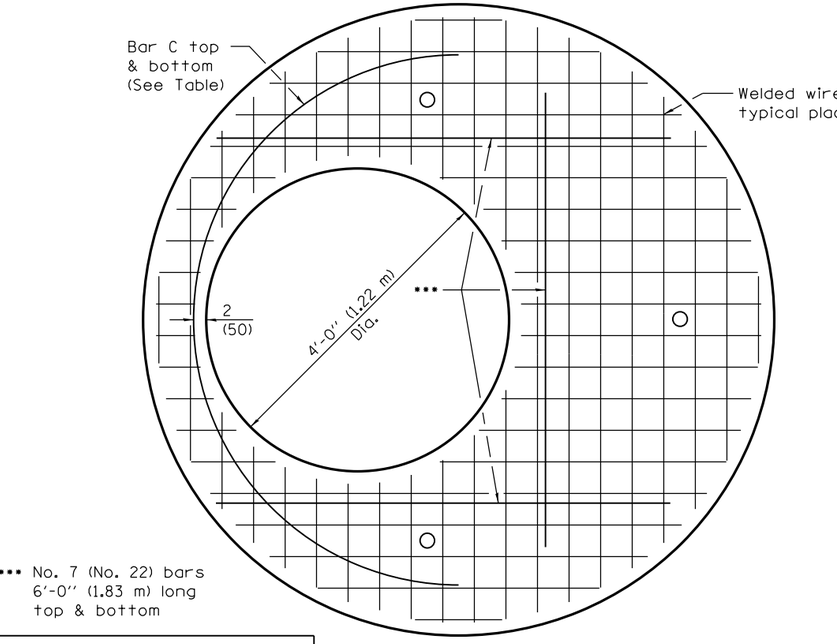


••• No. 7 (No. 22) bars
6'-0" (1.83 m) long
top & bottom

**PLAN**
Showing Welded Wire Reinforcement

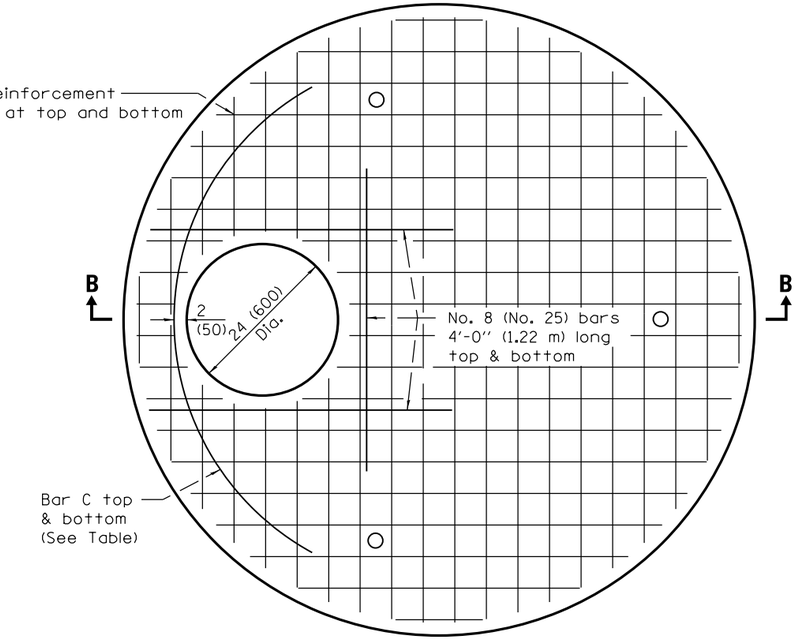


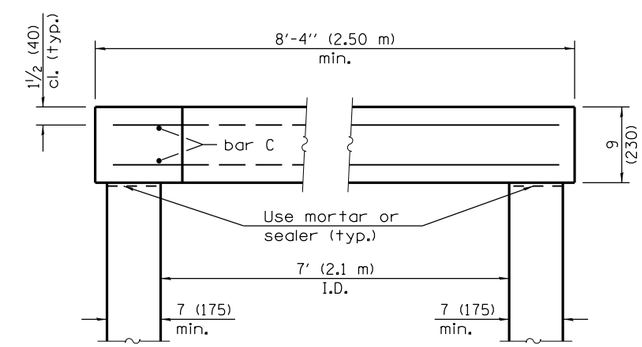


**SECTION B–B**
(Typical of each top)

Illinois Department of Transportation

PASSED April 1, 2016
Michael Brand
ENGINEER OF POLICY AND PROCEDURES

APPROVED April 1, 2016
ENGINEER OF DESIGN AND ENVIRONMENT

ISSUED 4-1-06

# MANHOLE TYPE A
# 7' (2.1 m) DIAMETER

(Sheet 2 of 2)

**STANDARD 602411–04**

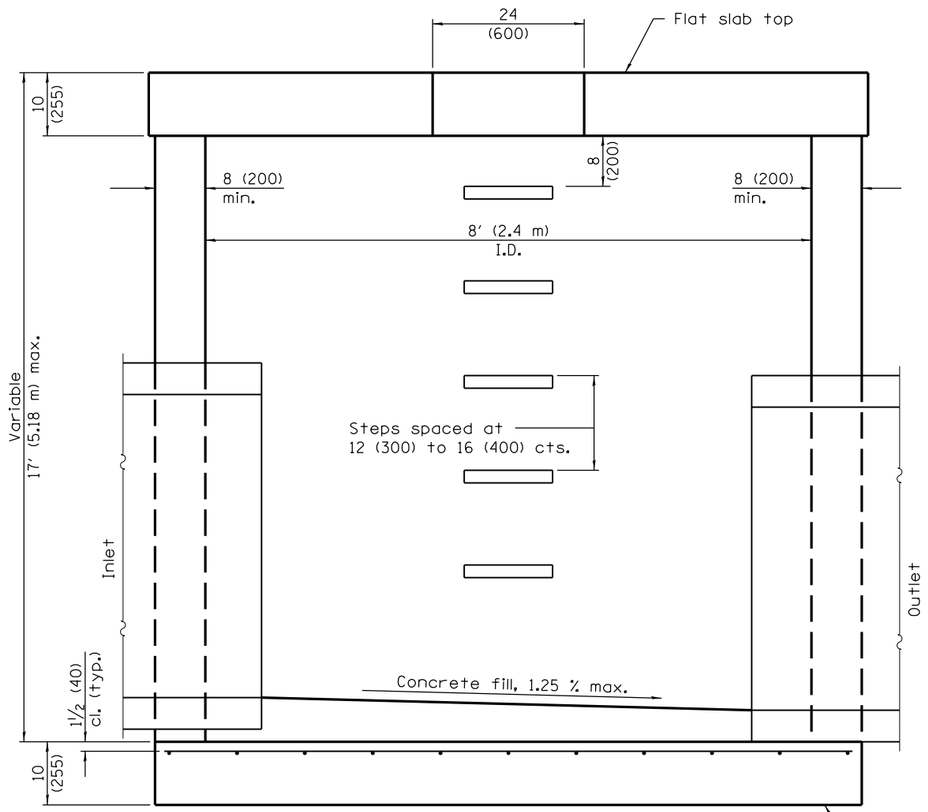


**ELEVATION**
(With Flat Slab Top Only)

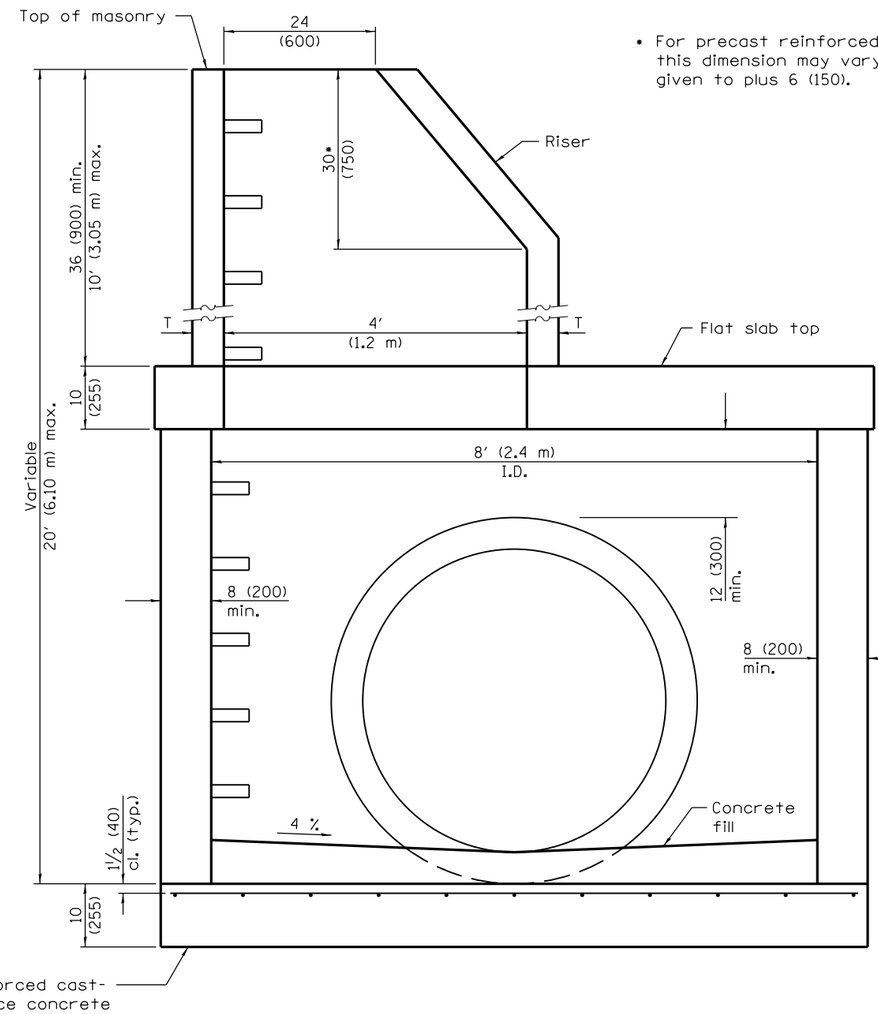


**ELEVATION**
(With Flat Slab Top and Riser)

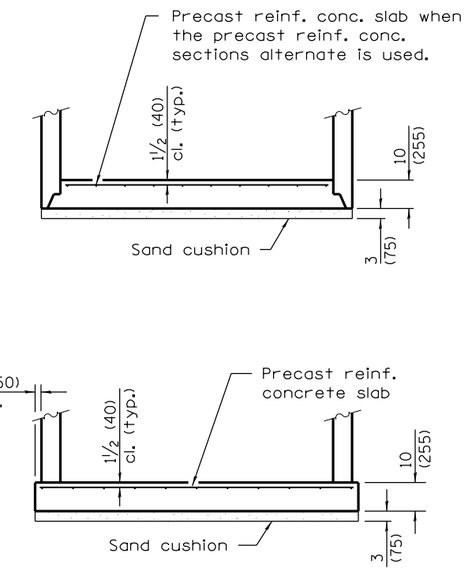


**ALTERNATE BOTTOM SLABS**

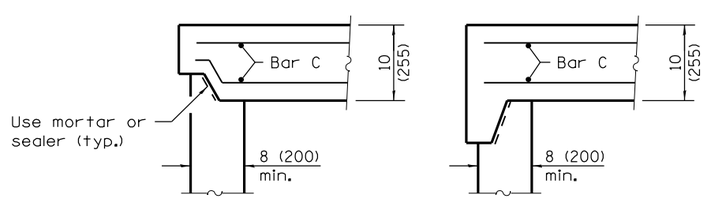


**ALTERNATE JOINT CONFIGURATIONS**

| ALTERNATE MATERIALS FOR RISER WALLS | T (min) |
|---|---|
| Concrete Masonry Units | 5 (125) |
| Precast Reinforced Concrete Sections | 4 (100) |
| Cast-in-Place Concrete | 6 (150) |

## GENERAL NOTES

Joint configuration and dimensions of flat slab top shall match and fit the riser joint detail.

Bottom slabs shall be reinforced with a minimum of 0.34 sq. in./ft. (720 sq. mm/m) in both directions. with a maximum spacing of 11 (280).

Bottom slabs may be connected to the riser as determined by the fabricator; however, only a single row of reinforcement around the perimeter may be utilized.

See Standard 602701 for details of manhole steps.

All dimensions are in inches (millimeters) unless otherwise shown.

Illinois Department of Transportation

PASSED April 1, 2016
Michael Brand
ENGINEER OF POLICY AND PROCEDURES
APPROVED April 1, 2016
ENGINEER OF DESIGN AND ENVIRONMENT

ISSUED 4-1-06

| DATE | REVISIONS |
|---|---|
| 4-1-16 | Changed terminology to |
| | 'welded wire reinforcement'. |
| | |
| 1-1-14 | Increased maximum heights. |
| | Revised General Notes. |
| | |

# MANHOLE TYPE A
# 8′ (2.4 m) DIAMETER

(Sheet 1 of 2)

**STANDARD 602416–05**

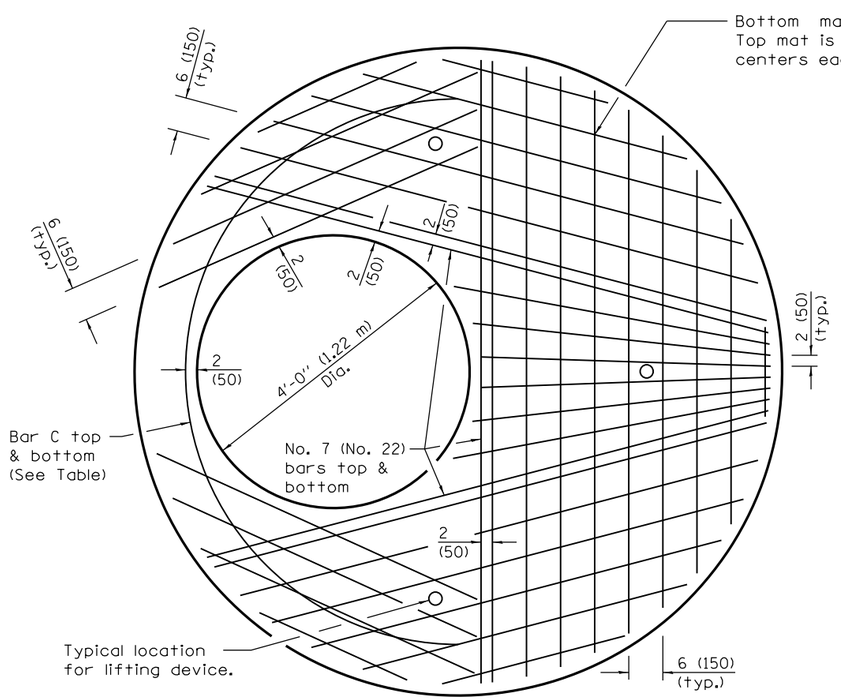


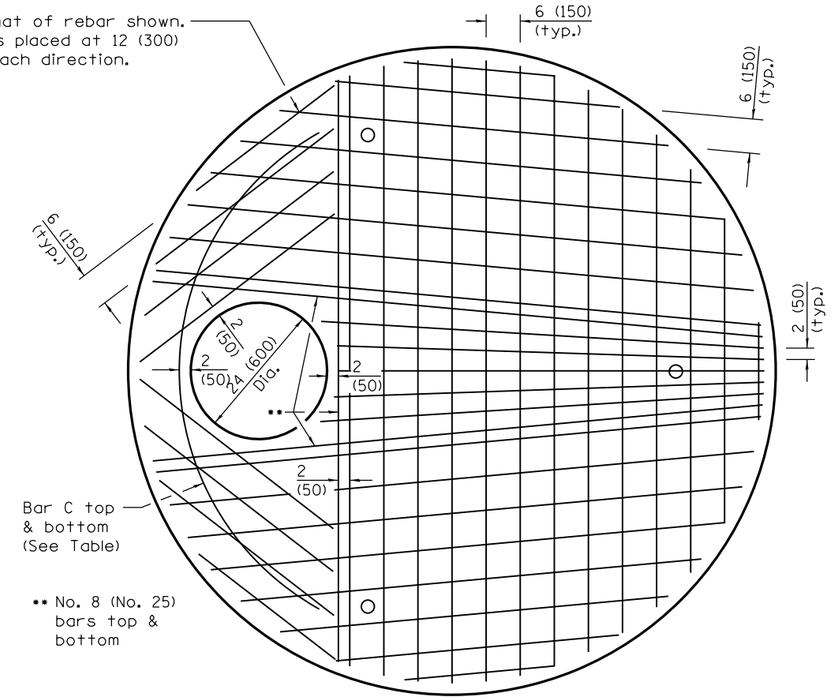


**PLAN**
Showing Rebar Reinforcement

| Diameter of opening | Reinforcement Bar Size | Reinforcement "As" WWR each direction | No. 4 (No. 13) Bar C | |
|---|---|---|---|---|
| | | | Length | Radius |
| 24 (600) | Bottom mat No. 8 (No. 25) | Bottom mat •••• 1.57 sq. in./ft. (3325 sq. mm/m) | 8'-6" (2.60 m) | 4'-0" (1.219 m) |
| | Top mat No. 4 (No. 13) | Top mat •••• 0.22 sq. in./ft. (470 sq. mm/m) | | |
| 4'-0" (1.2 m) | Bottom mat No. 7 (No. 22) | Bottom mat •••• 1.20 sq. in./ft. (2540 sq. mm/m) | 12'-6" (3.80 m) | 4'-0" (1.219 m) |
| | Top mat No. 4 (No. 13) | Top mat •••• 0.22 sq. in./ft. (470 sq. mm/m) | | |

•••• A maximum of two layers of welded wire reinforcement may be used to satisfy the required "As" for each mat.

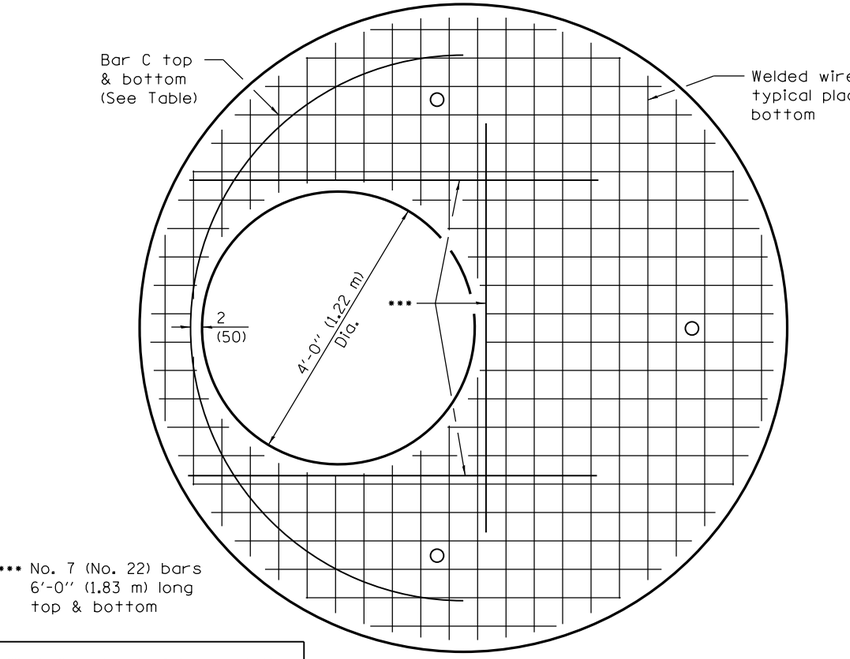


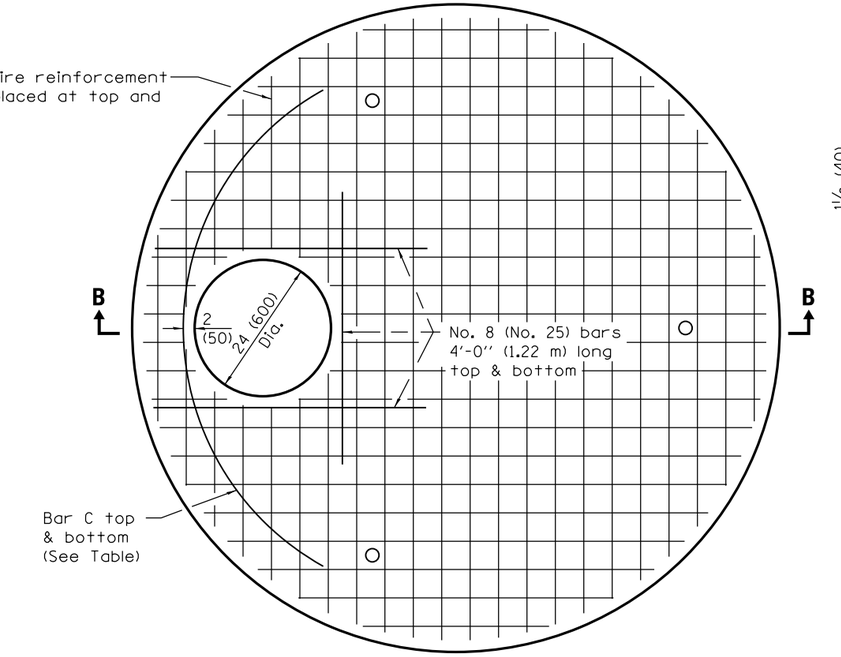


**PLAN**
Showing Welded Wire Reinforcement

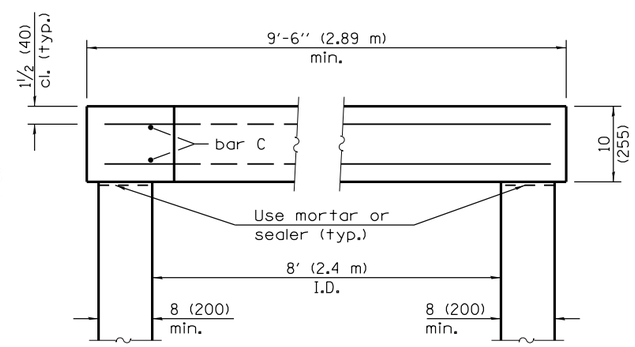


**SECTION B–B**

Illinois Department of Transportation

PASSED April 1, 2016
Michael Brand
ENGINEER OF POLICY AND PROCEDURES
APPROVED April 1, 2016
ENGINEER OF DESIGN AND ENVIRONMENT

ISSUED 4-1-06

# MANHOLE TYPE A
# 8' (2.4 m) DIAMETER

(Sheet 2 of 2)

**STANDARD 602416–05**

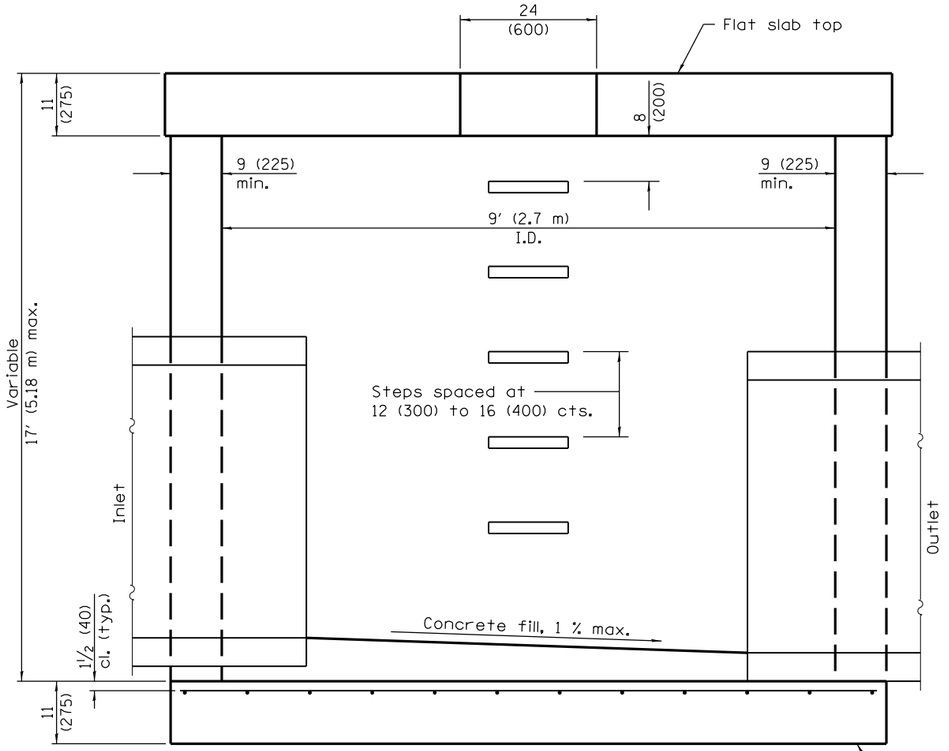


## ELEVATION
(With Flat Slab Top Only)

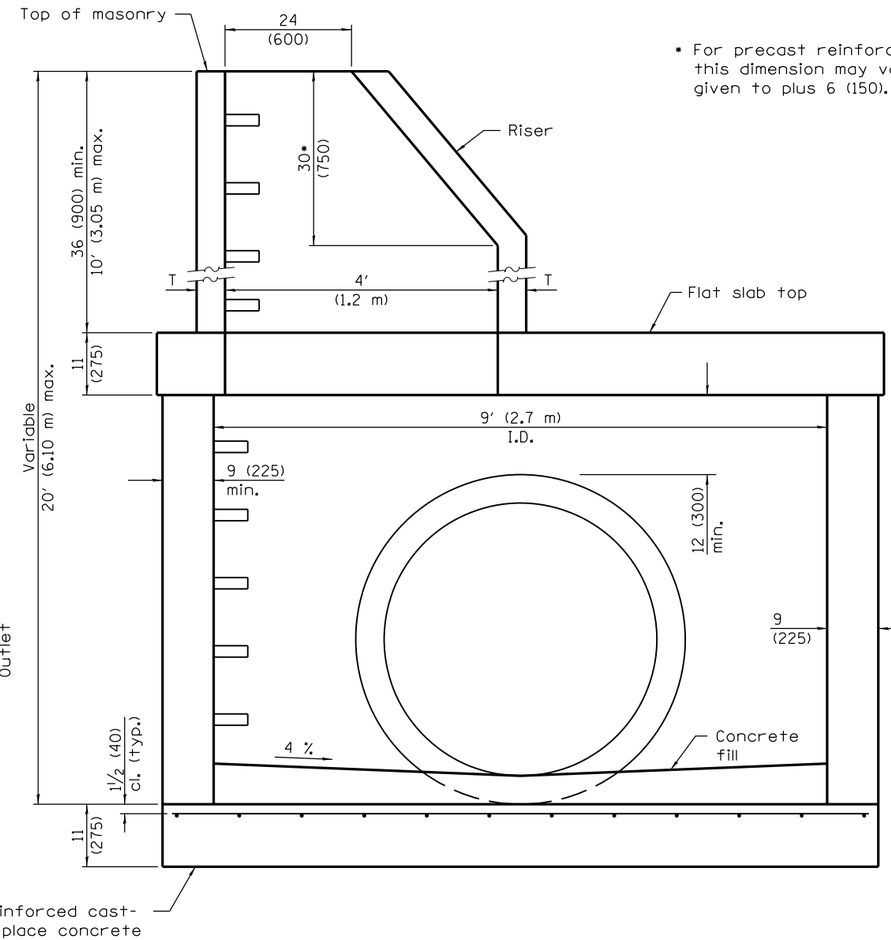


## ELEVATION
(With Flat Slab Top and Riser)

- For precast reinforced concrete sections, this dimension may vary from the dimension given to plus 6 (150).

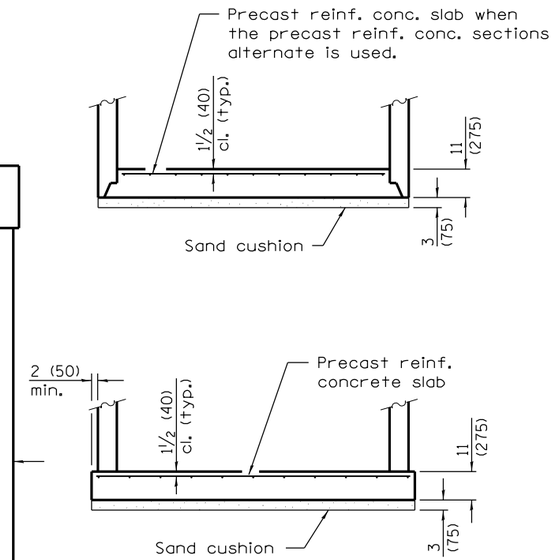


## ALTERNATE BOTTOM SLABS

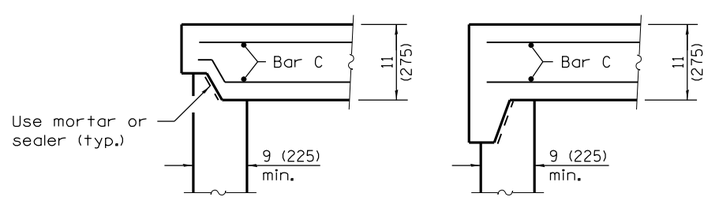


## ALTERNATE JOINT CONFIGURATIONS

| ALTERNATE MATERIALS FOR RISER WALLS | T (min) |
|---|---|
| Concrete Masonry Units | 5 (125) |
| Precast Reinforced Concrete Sections | 4 (100) |
| Cast-in-Place Concrete | 6 (150) |

## GENERAL NOTES

Joint configuration and dimensions of flat slab top shall match and fit the riser joint detail.

Bottom slabs shall be reinforced with a minimum of 0.37 sq. in./ft. (780 sq. mm/m) in both directions with a maximum spacing of 10 (250).

Bottom slabs may be connected to the riser as determined by the fabricator; however, only a single row of reinforcement around the perimeter may be utilized.

See Standard 602701 for details of manhole steps.

All dimensions are in inches (millimeters) unless otherwise shown.

Illinois Department of Transportation

PASSED April 1, 2016
Michael Brand
ENGINEER OF POLICY AND PROCEDURES
APPROVED April 1, 2016
ENGINEER OF DESIGN AND ENVIRONMENT

ISSUED 4-1-06

| DATE | REVISIONS |
|---|---|
| 4-1-16 | Changed terminology to |
| | 'welded wire reinforcement'. |
| | |
| 1-1-14 | Increased maximum heights. |
| | Revised General Notes. |
| | |

# MANHOLE TYPE A
# 9′ (2.7 m) DIAMETER

(Sheet 1 of 2)

STANDARD 602421–05

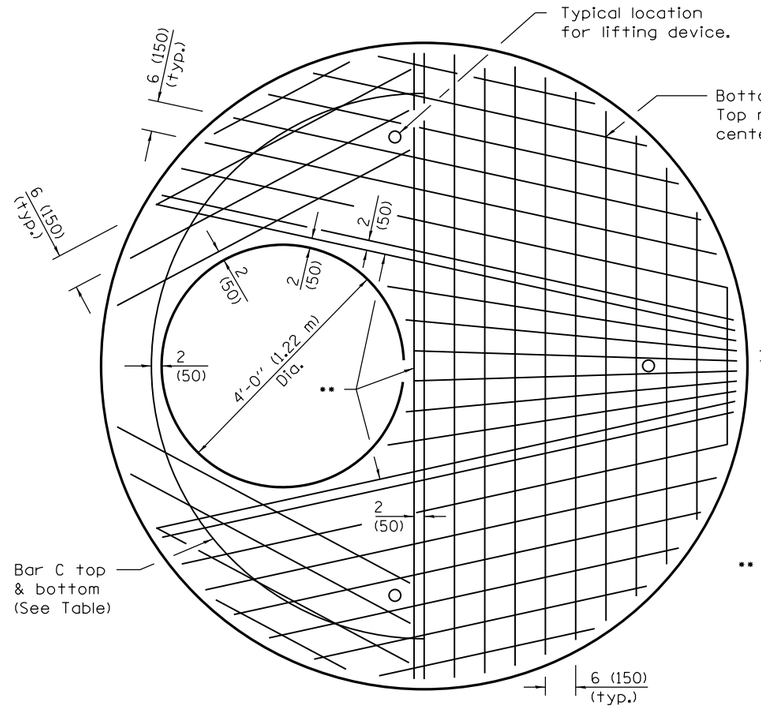


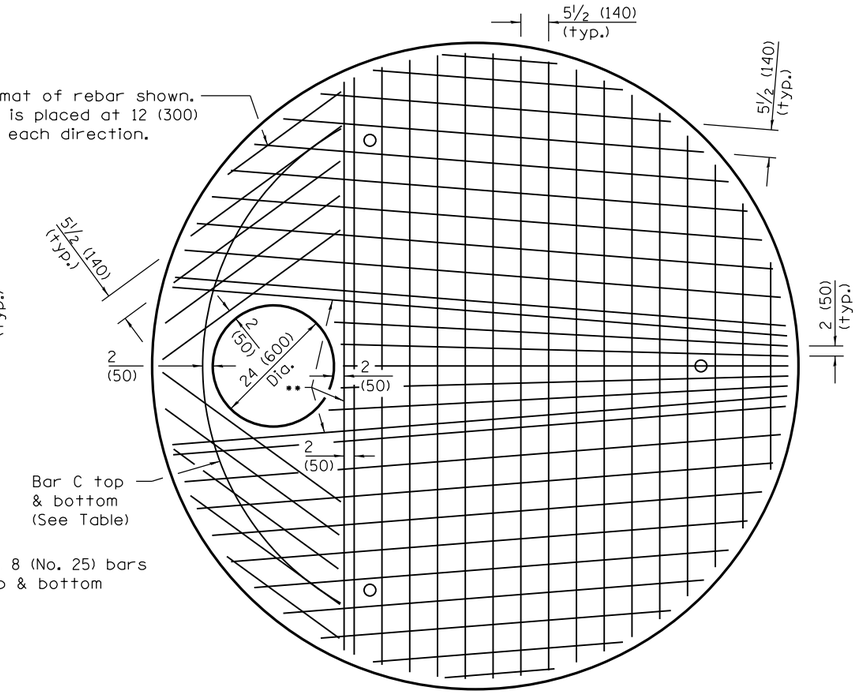


•• No. 8 (No. 25) bars
top & bottom

**PLAN**
Showing Rebar Reinforcement

| Diameter of opening | Reinforcement Bar Size | Reinforcement "As" WWR each direction | No. 4 (No. 13) Bar C | |
|---|---|---|---|---|
| | | | Length | Radius |
| 24 (600) | Bottom mat No. 8 (No. 25) | Bottom mat •••• 1.71 sq. in./ft. (3620 sq. mm/m) | 9'-6" (2.90 m) | 4'-6" (1.372 m) |
| | Top mat No. 4 (No. 13) | Top mat •••• 0.24 sq. in./ft. (510 sq. m/mm) | | |
| | Bottom mat No. 8 (No. 25) | Bottom mat •••• 1.57 sq. in./ft. (3325 sq. m/mm) | 14'-2" (4.30 m) | 4'-6" (1.372 m) |
| | Top mat No. 4 (No. 13) | Top mat •••• 0.24 sq. in./ft. (510 sq. m/mm) | | |

•••• A maximum of two layers of welded wire reinforcement may be used to satisfy the required "As" for each mat.

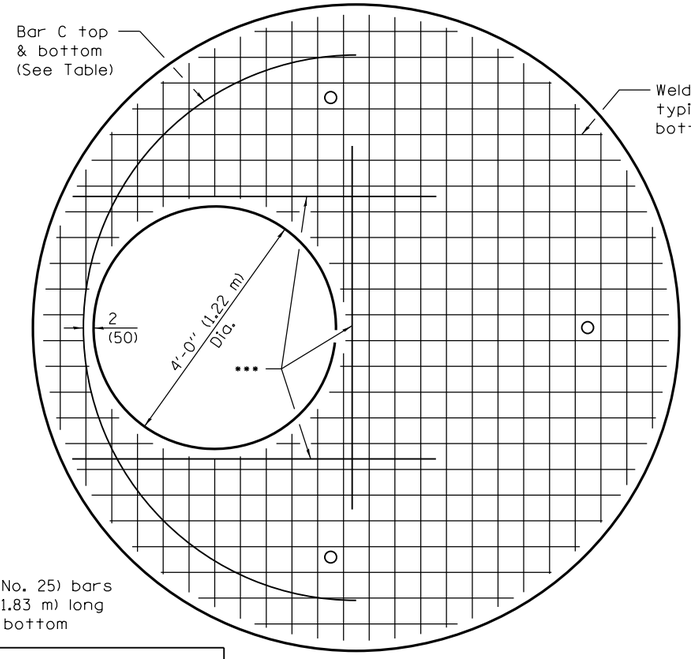


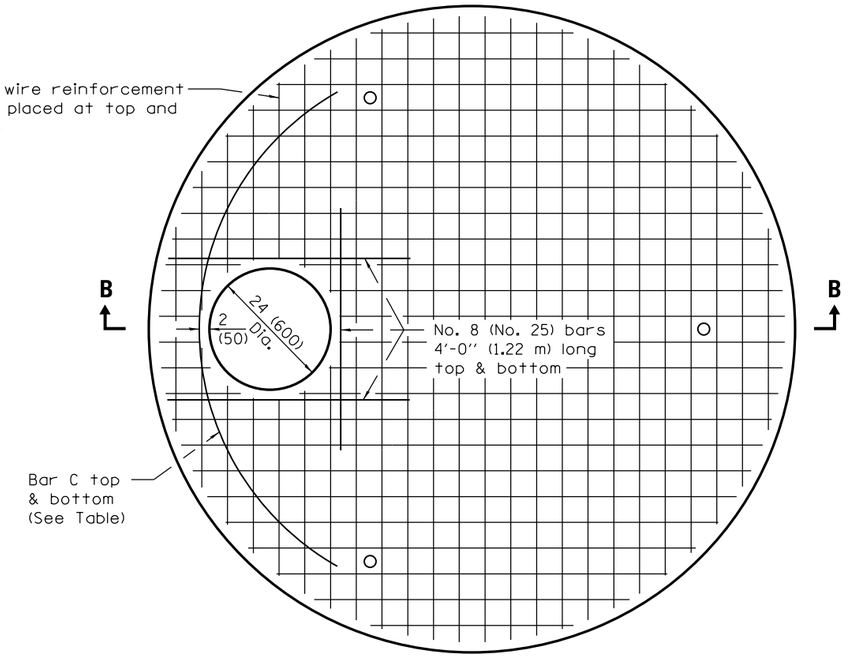


••• No. 8 (No. 25) bars
6'-0" (1.83 m) long
top & bottom

**PLAN**
Showing Welded Wire Reinforcement

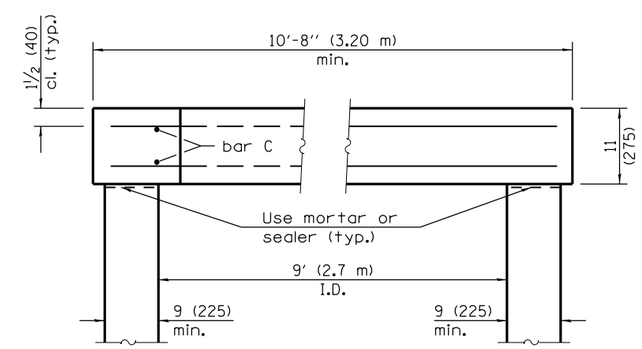


**SECTION B–B**

Illinois Department of Transportation

PASSED April 1, 2016
Michael Brand
ENGINEER OF POLICY AND PROCEDURES
APPROVED April 1, 2016
ENGINEER OF DESIGN AND ENVIRONMENT

ISSUED 4-1-06

# MANHOLE TYPE A
# 9' (2.7 m) DIAMETER

(Sheet 2 of 2)

**STANDARD 602421–05**

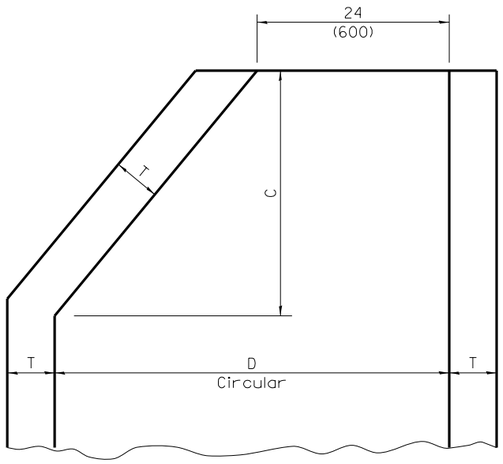


The cone of the valve vault shall be constructed as shown above only when there is interference with underground conditions and those conditions cannot be altered.

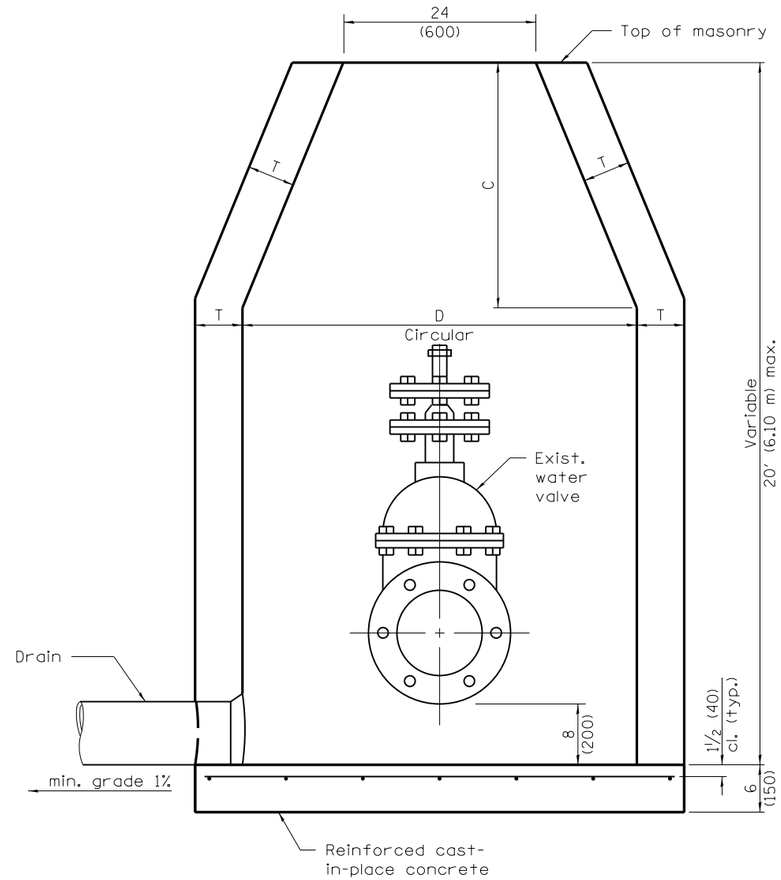


## ELEVATION

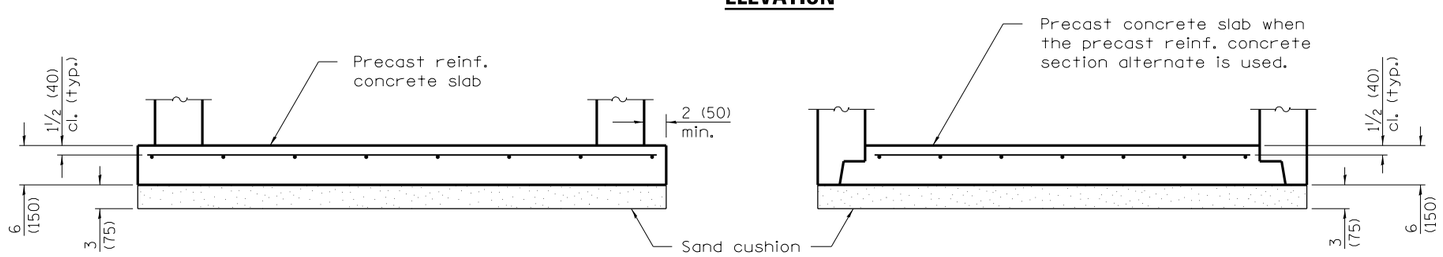


## ALTERNATE METHODS

| ALTERNATE MATERIALS FOR WALLS | D | C * | T (min.) |
|---|---|---|---|
| Concrete Masonry Unit | 4'-0" (1.2 m)<br>5'-0" (1.5 m) | 30 (750)<br>3'-9" (1.15 m) | 5 (125)<br>5 (125) |
| Brick Masonry | 4'-0" (1.2 m)<br>5'-0" (1.5 m) | 30 (750)<br>3'-9" (1.15 m) | 8 (200)<br>8 (200) |
| Precast Reinforced Concrete Section | 4'-0" (1.2 m)<br>5'-0" (1.5 m) | 30 (750)<br>3'-9" (1.15 m) | 4 (100)<br>5 (125) |
| Cast-in-Place Concrete | 4'-0" (1.2 m)<br>5'-0" (1.5 m) | 30 (750)<br>3'-9" (1.15 m) | 6 (150)<br>6 (150) |

* For precast reinforced concrete sections, dimension "C" may vary from the dimension given to plus 6 (150).

| DIAMETER OF WATER MAIN | D |
|---|---|
| 8 (200) and under | 4'-0" (1.2 m) |
| 10 (250) and over | 5'-0" (1.5 m) |

## GENERAL NOTES

Bottom slabs shall be reinforced with a minimum of 0.31 sq. in./ft. (660 sq. mm/m) in both directions with a maximum spacing of 12 (300).

Bottom slabs may be connected to the riser as determined by the fabricator; however, only a single row of reinforcement around the perimeter may be utilized.

See Standard 602601 for optional Precast Reinforced Concrete Flat Top Slab.

All dimensions are in inches (millimeters) unless otherwise shown.

Illinois Department of Transportation

PASSED January 1, 2011
Michael Brand
ENGINEER OF POLICY AND PROCEDURES

APPROVED January 1, 2011
Scott E. Stokes
ENGINEER OF DESIGN AND ENVIRONMENT

ISSUED 1-1-97

| DATE | REVISIONS |
|---|---|
| 1-1-11 | Detailed reinforcement in slabs. Revised general notes. |
| 1-1-09 | Switched units to English (metric). |

# VALVE VAULT TYPE A

STANDARD 602501–02

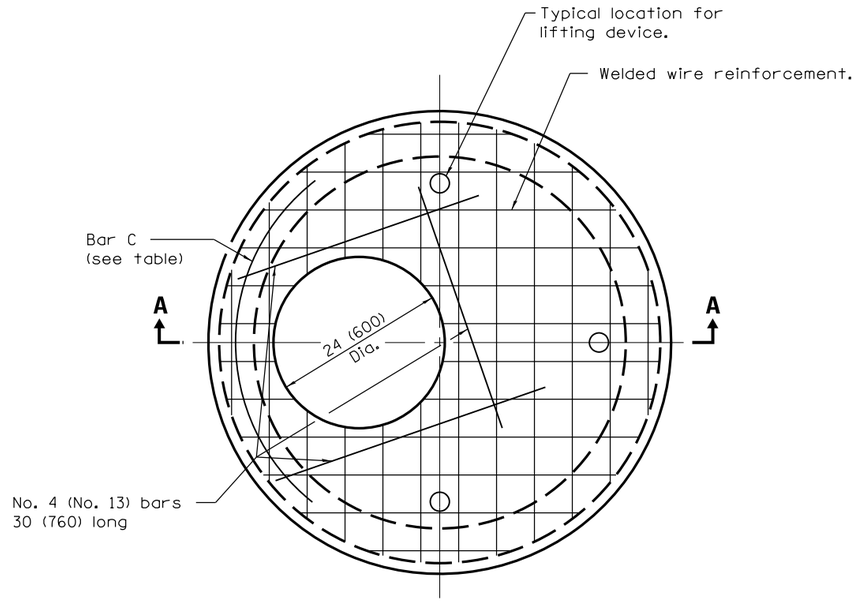


**PLAN**
(WELDED WIRE FABRIC)

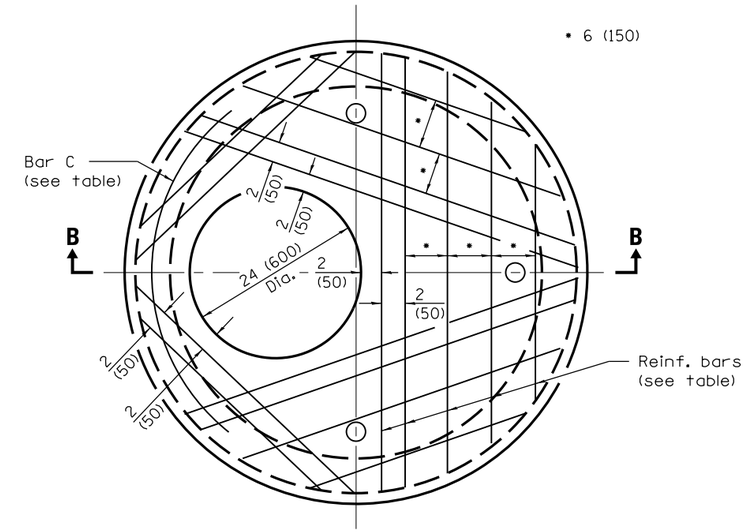


**PLAN**
(REINFORCEMENT BARS)

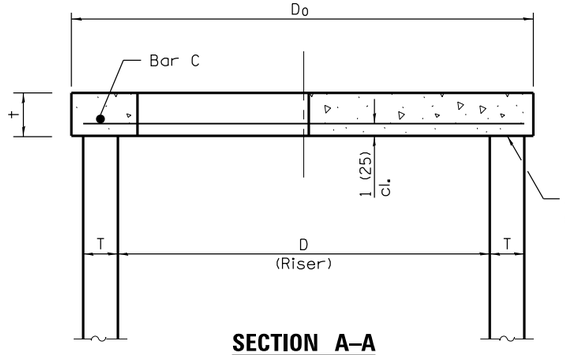


**SECTION A–A**

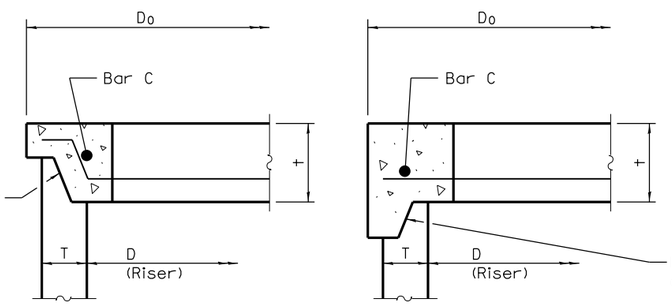


**ALTERNATE JOINT CONFIGURATIONS**

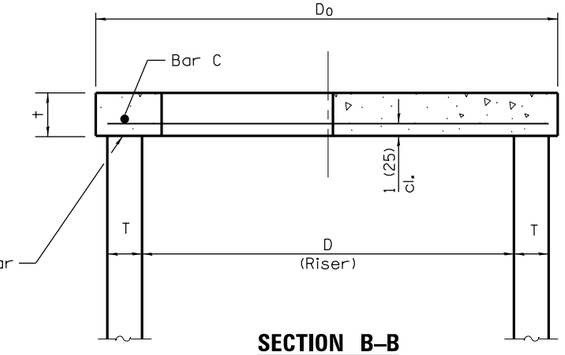


**SECTION B–B**

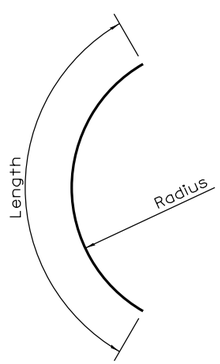


**BAR C**

## GENERAL NOTES

The flat slab top may be used in lieu of the tapered tops shown on Standards 602001, 602011, 602016, 602306, 602401, or 602501 at the option of the Contractor or when field conditions prohibit the use of tapered tops.

All dimensions are in millimeters (inches) unless otherwise shown.

## TABLE

| D | T | $D_o$ (min.) | t | Reinforcement "$A_s$" W.W.R. each direction | OR Bar size | No. 4 (No. 13) Bar C Length | Radius |
|---|---|---|---|---|---|---|---|
| 36 (900) | See applicable Standards | D + 2T | 6 (150) | 0.20 sq. in./ft. (425 sq. mm/m) | No. 4 (No. 13) | 4'-0" (1.2 m) | 19 (480) |
| 4'-0" (1.2 m) | | | 6 (150) | 0.35 sq. in./ft. (740 sq. mm/m) | No. 5 (No. 16) | 4'-6" (1.35 m) | 26 (660) |
| 5'-0" (1.5 m) | | | 8 (200) | 0.35 sq. in./ft. (740 sq. mm/m) | No. 5 (No. 16) | 5'-0" (1.5 m) | 32 (810) |

Illinois Department of Transportation

PASSED April 1, 2016
Michael Brand
ENGINEER OF POLICY AND PROCEDURES
APPROVED April 1, 2016
ENGINEER OF DESIGN AND ENVIRONMENT

ISSUED 1-1-97

| DATE | REVISIONS |
|---|---|
| 4-1-16 | Changed terminology to 'welded wire reinforcement'. |
| 1-1-14 | Omitted detail for lifting hole or lifting loop. |

# PRECAST REINFORCED CONCRETE FLAT SLAB TOP

**STANDARD 602601–04**

CAST IRON STEPS

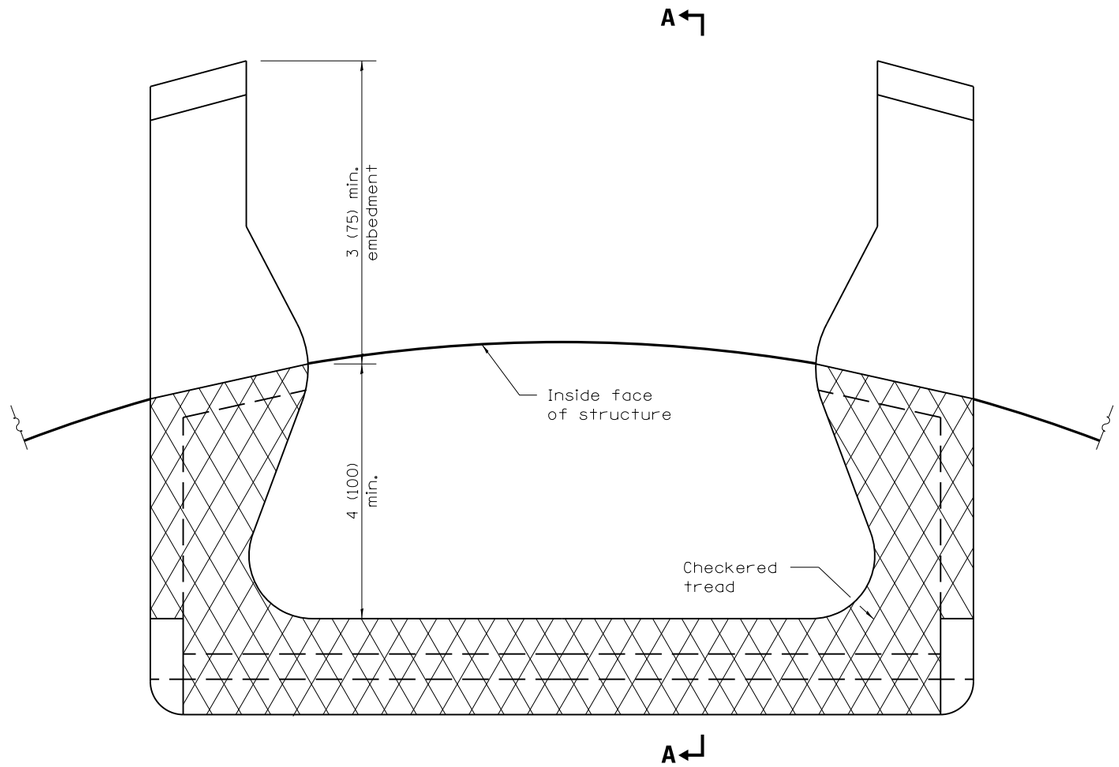


PLAN VIEW

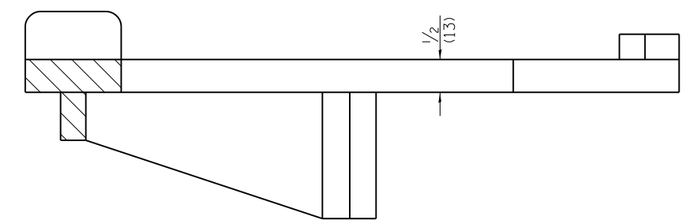


SECTION A–A

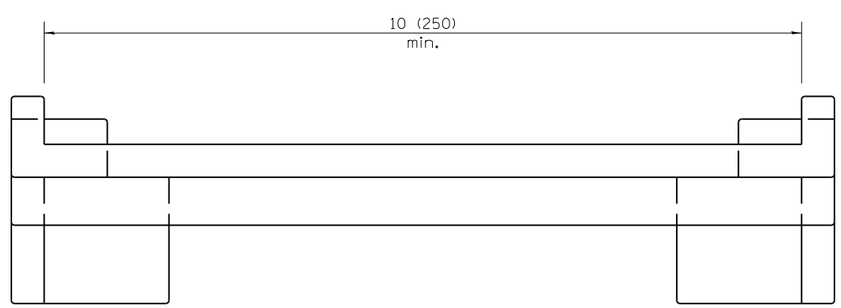


ELEVATION VIEW

All dimensions are in inches (millimeters)
unless otherwise shown.

Illinois Department of Transportation

PASSED January 1, 2009
ENGINEER OF POLICY AND PROCEDURES
APPROVED January 1, 2009
ENGINEER OF DESIGN AND ENVIRONMENT

ISSUED 1-1-97

| DATE | REVISIONS |
|---|---|
| 1-1-09 | Switched units to |
| | English (metric). |
| | |
| 4-1-06 | Revised title, drawings, |
| | and added plastic |
| | steps on sheet 2. |

# MANHOLE STEPS

(Sheet 1 of 2)

STANDARD 602701–02

PLASTIC STEPS

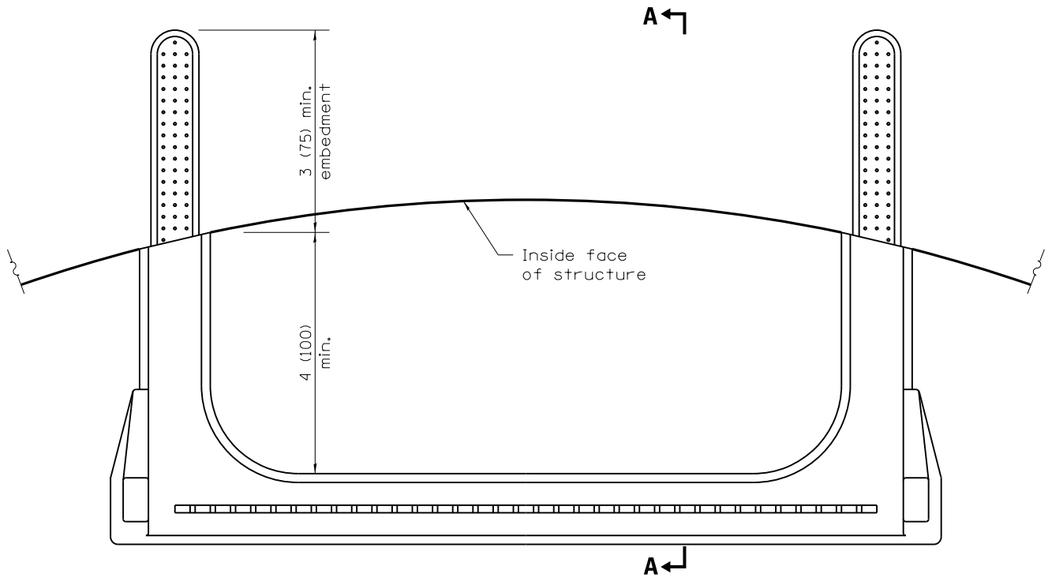


PLAN VIEW

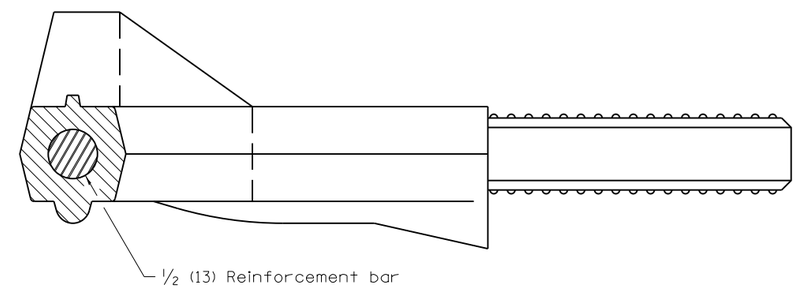


SECTION A–A

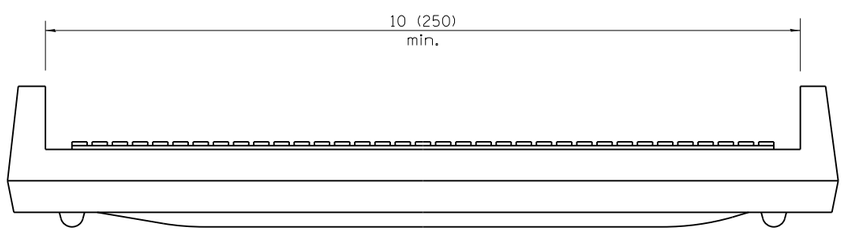


ELEVATION VIEW

Illinois Department of Transportation

PASSED January 1, 2009

ENGINEER OF POLICY AND PROCEDURES

APPROVED January 1, 2009

ENGINEER OF DESIGN AND ENVIRONMENT

ISSUED 1-1-97

# MANHOLE STEPS

(Sheet 2 of 2)

STANDARD 602701–02

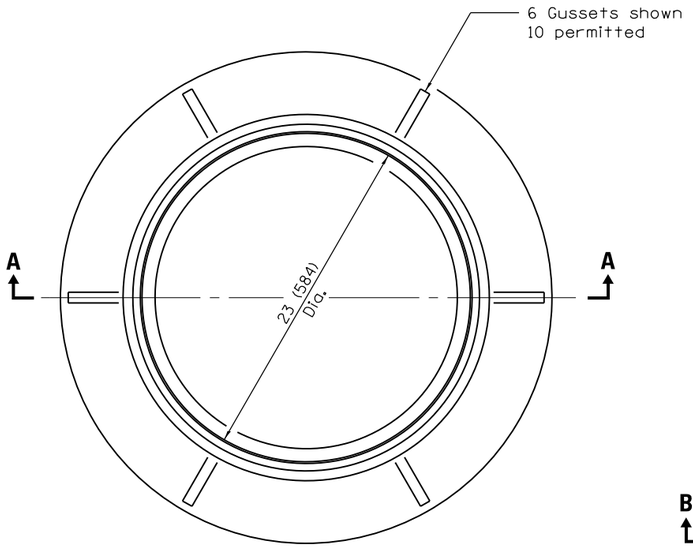


**CAST FRAME**

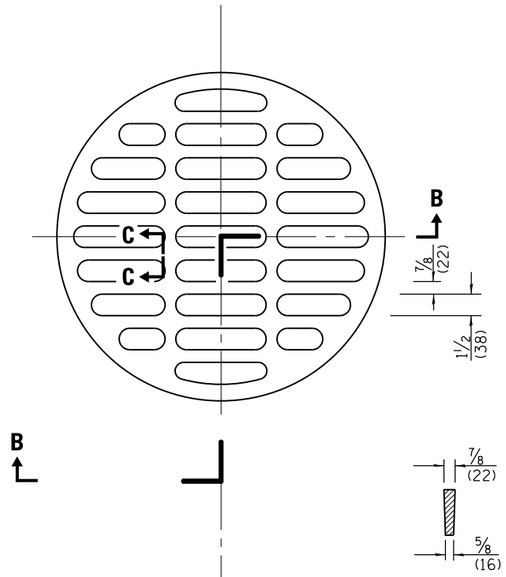


**SECTION C–C**

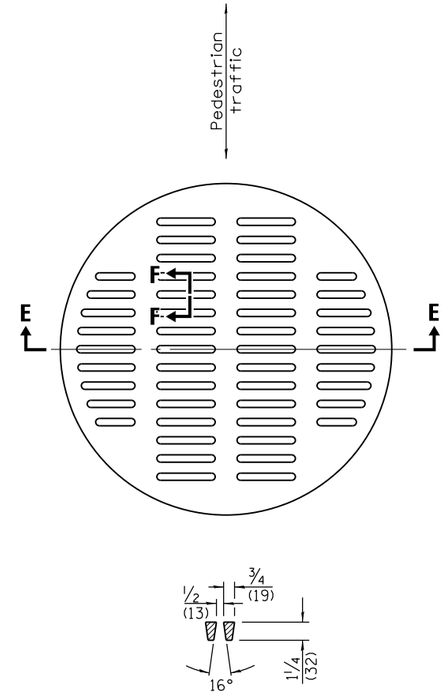


**SECTION F–F**

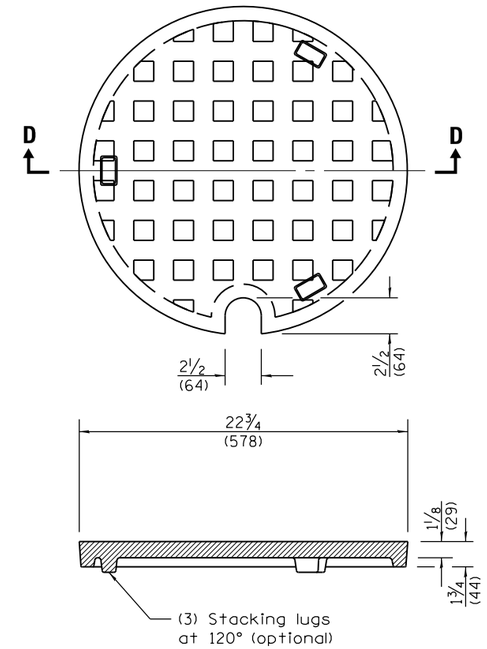


**SECTION D–D**

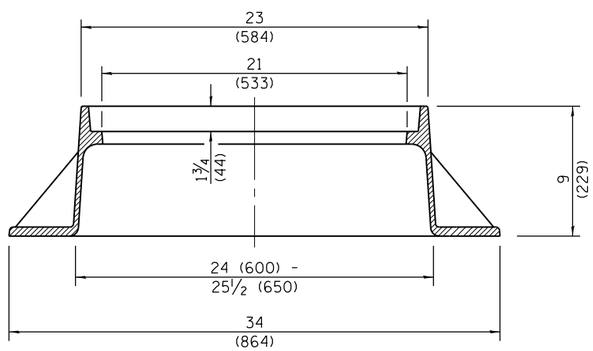


**SECTION A–A**
Gray Iron

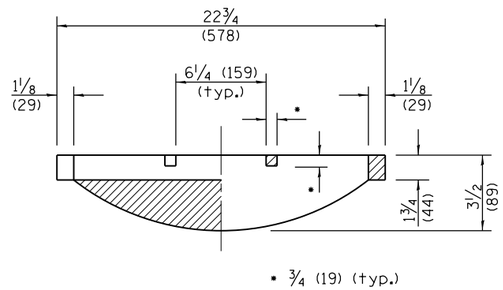


**SECTION B–B**

**CAST OPEN LID**

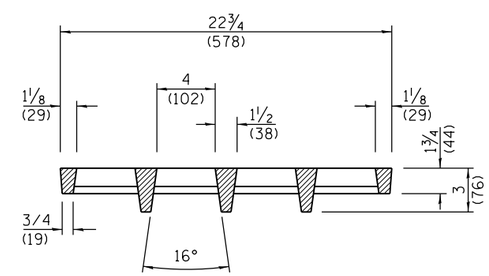


**SECTION E–E**

**ADA COMPLIANT**
**CAST OPEN LID**

**CAST CLOSED LID**
Gray Iron Lid

All dimensions are in inches (millimeters) unless otherwise shown.

Illinois Department of Transportation

PASSED January 1, 2015
Michael Brand
ENGINEER OF POLICY AND PROCEDURES
APPROVED January 1, 2015
ENGINEER OF DESIGN AND ENVIRONMENT

ISSUED 1-1-97

| DATE | REVISIONS |
|---|---|
| 1-1-15 | Revised dimensioning of |
| | frame. Added ADA compliant |
| | open lid. |
| 1-1-09 | Switched units to |
| | English (metric). |
| | |

# FRAME AND LIDS TYPE 1

**STANDARD 604001–04**

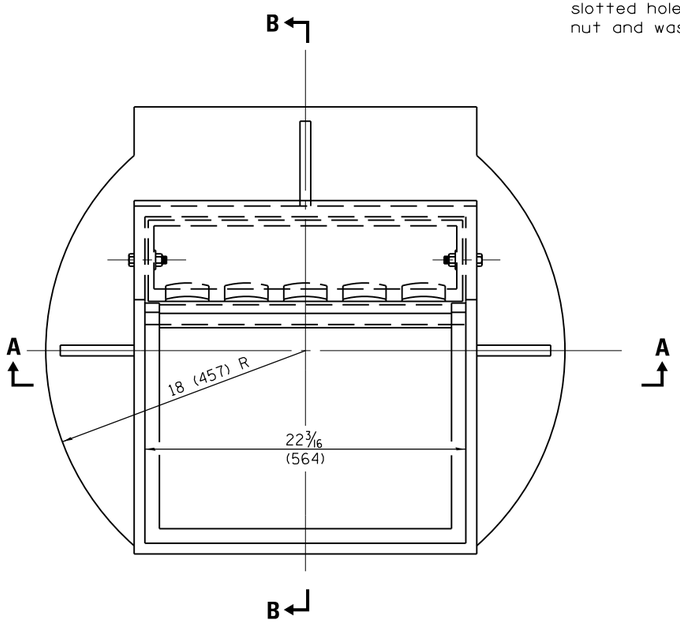


**CAST FRAME**

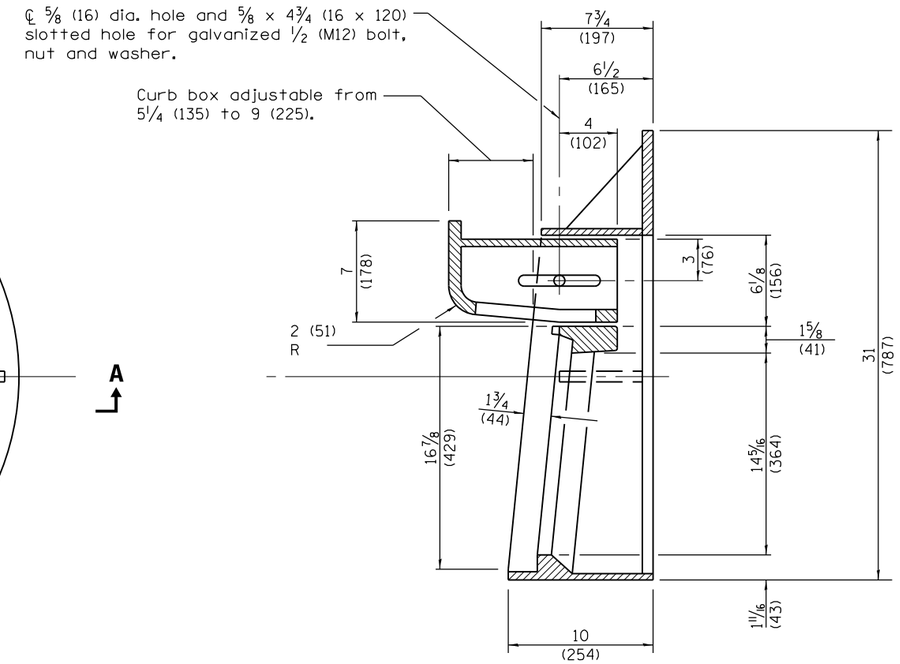


**SECTION B–B**

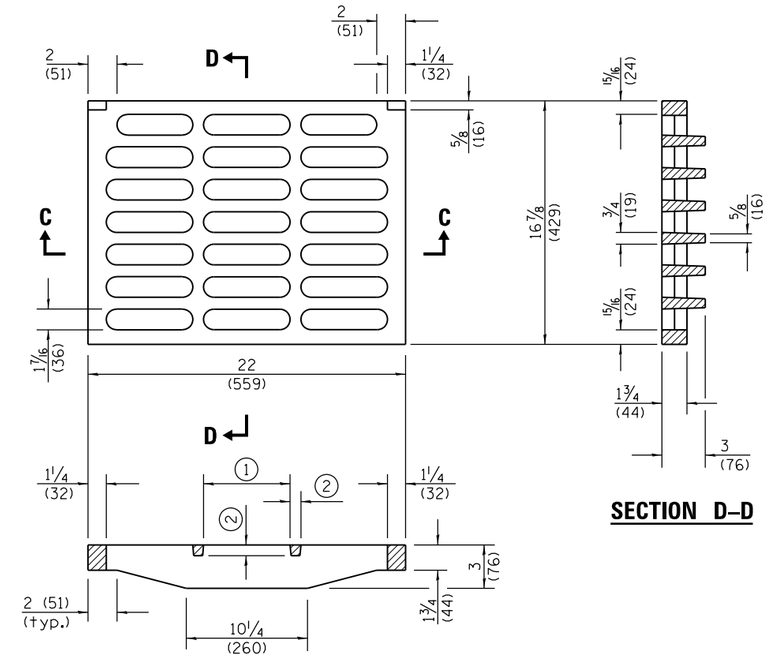


**SECTION D–D**

**SECTION C–C**

1 = 6 (152) typ.

2 = 3/4 (19) typ.

**CAST GRATE**

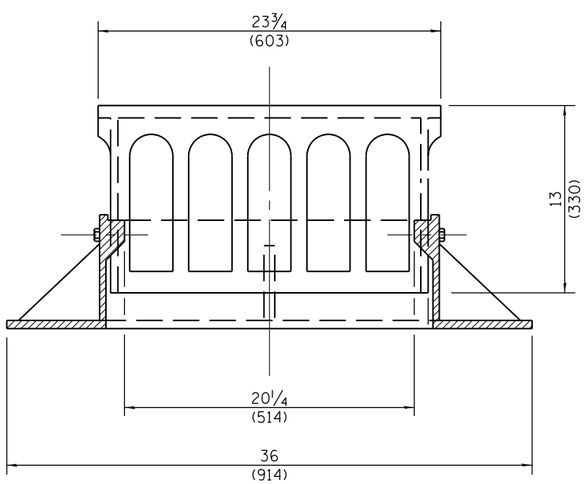


**SECTION A–A**

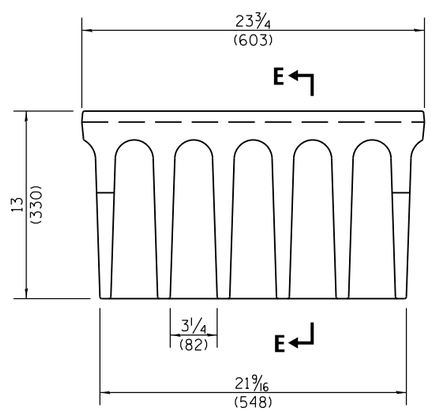


**ALTERNATE CURB BOX**

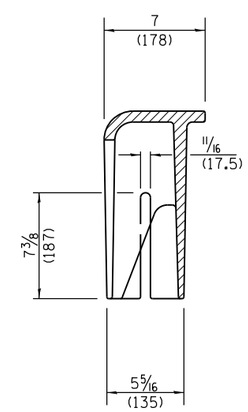


**SECTION E–E**

All dimensions are in inches (millimeters) unless otherwise shown.

Illinois Department of Transportation

PASSED January 1. 2015

Michael Brand

ENGINEER OF POLICY AND PROCEDURES

APPROVED January 1. 2015

ENGINEER OF DESIGN AND ENVIRONMENT

ISSUED 1-1-97

| DATE | REVISIONS |
|---|---|
| 1-1-15 | Revised dimenstions of |
| | frame and alternate curb |
| | box. |
| 1-1-09 | Switched units to |
| | English (metric). |
| | |

# FRAME AND GRATE TYPE 3

**STANDARD 604006–05**

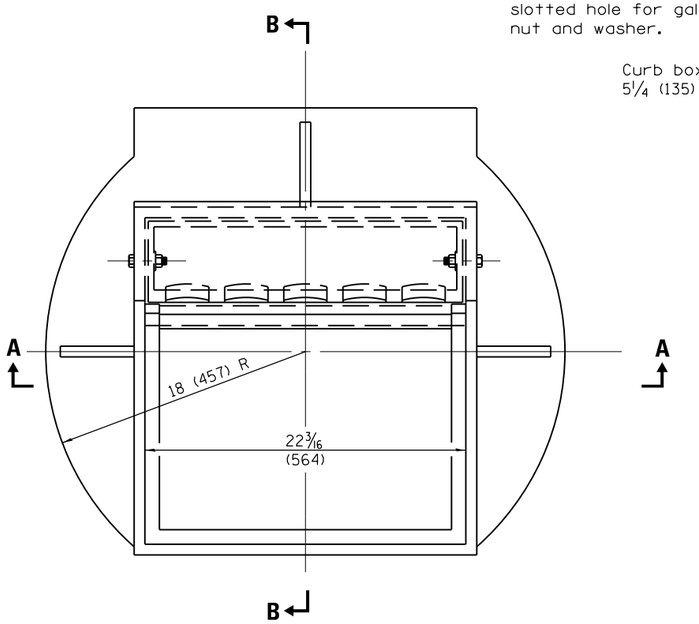


**CAST FRAME**

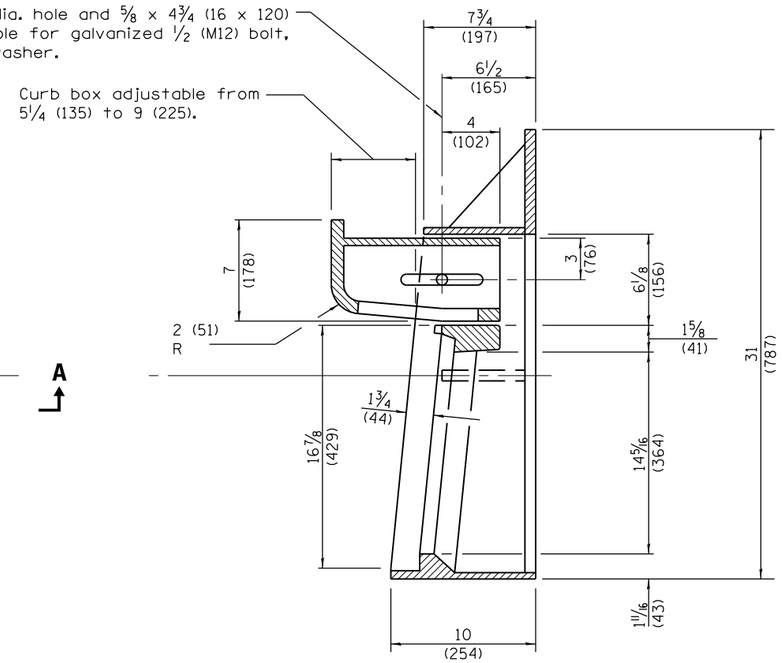


**SECTION B–B**

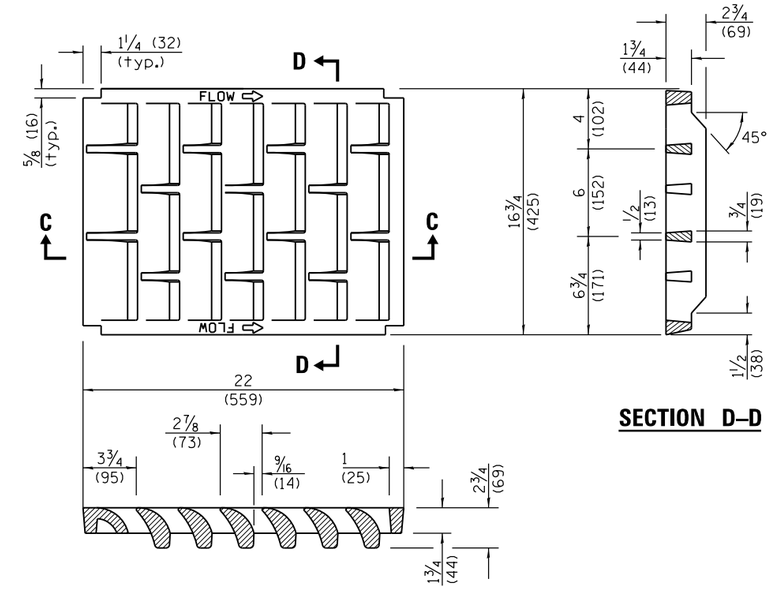


**SECTION D–D**

**SECTION C–C**

**CAST GRATE**

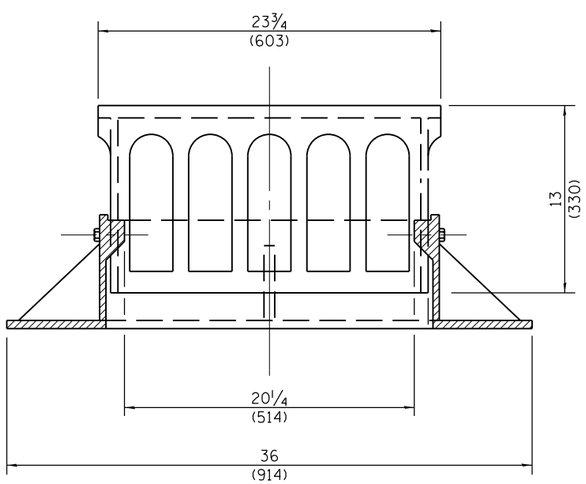


**SECTION A–A**

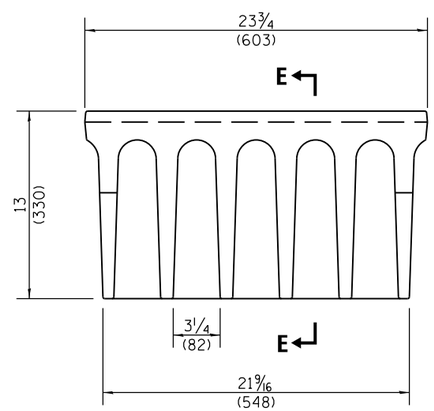


**ALTERNATE CURB BOX**

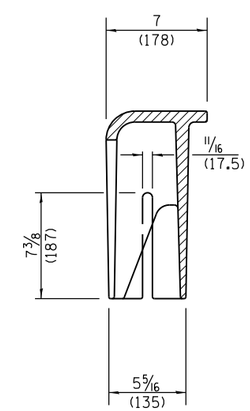


**SECTION E–E**

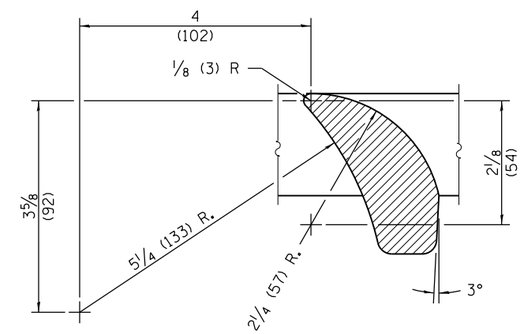


**VANE DETAIL**

All dimensions are in inches (millimeters) unless otherwise shown.

Illinois Department of Transportation

PASSED January 1, 2015

Michael Brand
ENGINEER OF POLICY AND PROCEDURES

APPROVED January 1, 2015

ENGINEER OF DESIGN AND ENVIRONMENT

ISSUED 1-1-97

| DATE | REVISIONS |
|---|---|
| 1-1-15 | Revised dimensions of frame |
| | and alternate curb box. |
| | |
| 1-1-09 | Switched units to |
| | English (metric). |
| | |

# FRAME AND GRATE TYPE 3V

**STANDARD 604011–05**

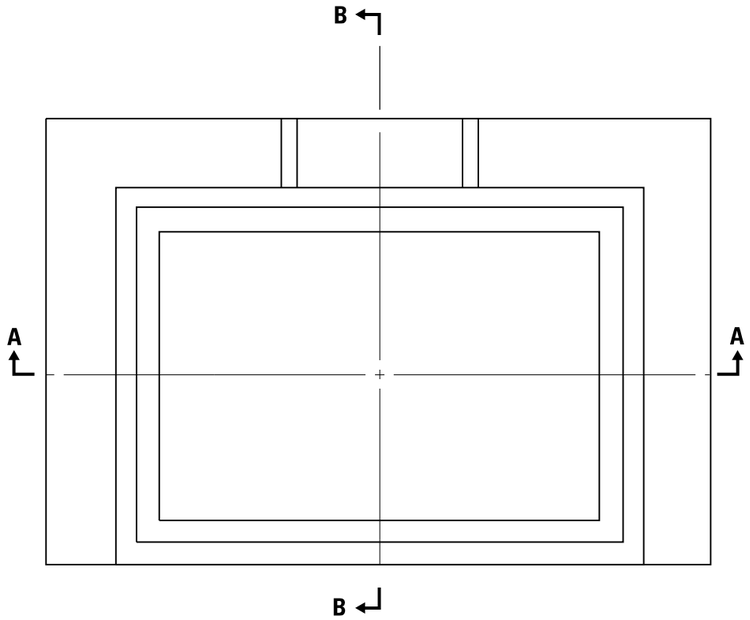


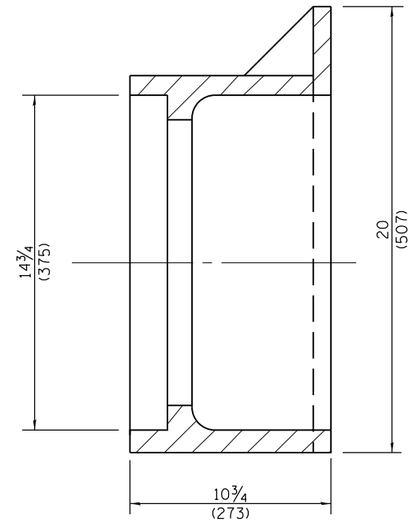


**SECTION B–B**

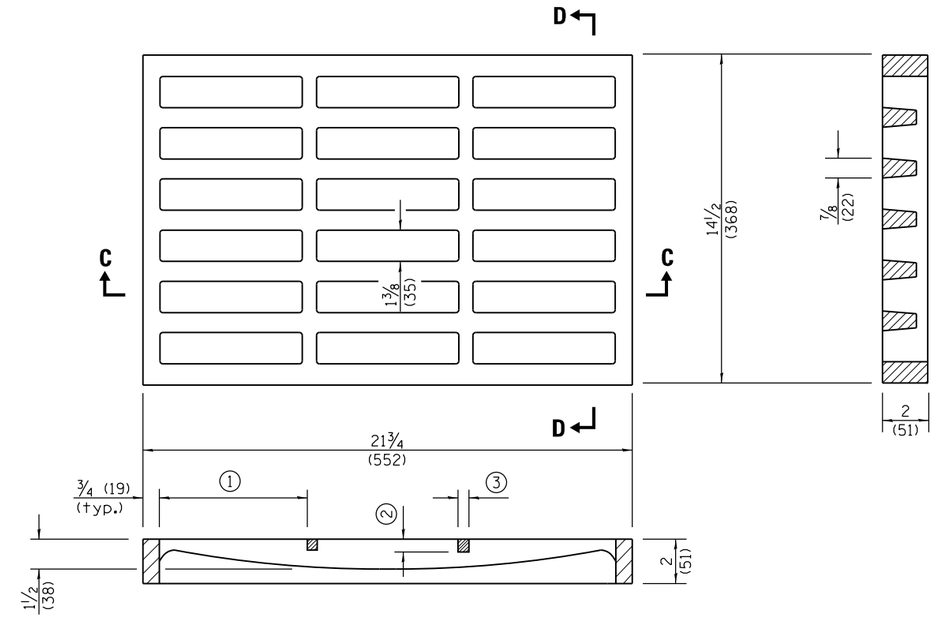


**SECTION C–C**

**SECTION D–D**

① = 6¼ (159) (typ.)
② = ¾ (19) (typ.)
③ = ⅝ (16) (typ.)

**CAST GRATE**

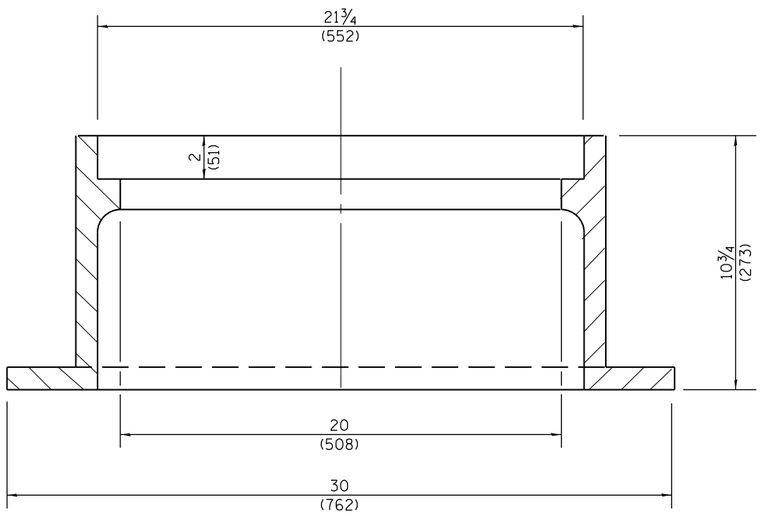


**SECTION A–A**

**CAST FRAME**

All dimensions are in inches (millimeters) unless otherwise shown.

| DATE | REVISIONS |
|---|---|
| 4-1-16 | Corrected dimension on |
| | SECTION A-A. |
| | |
| 1-1-15 | Revised dimensions of frame |
| | and grate. |
| | |

# FRAME AND GRATE TYPE 4

**STANDARD 604016–03**

Illinois Department of Transportation

PASSED April 1, 2016
Michael Brand
ENGINEER OF POLICY AND PROCEDURES

APPROVED April 1, 2016
ENGINEER OF DESIGN AND ENVIRONMENT

ISSUED 1-1-97

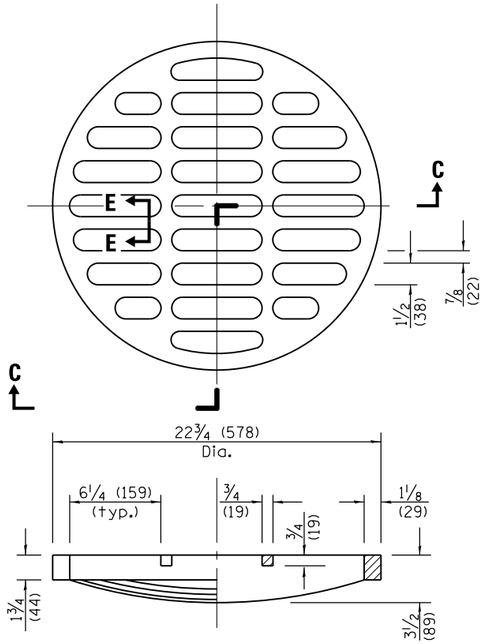


**SECTION C–C**

**CAST OPEN LID**

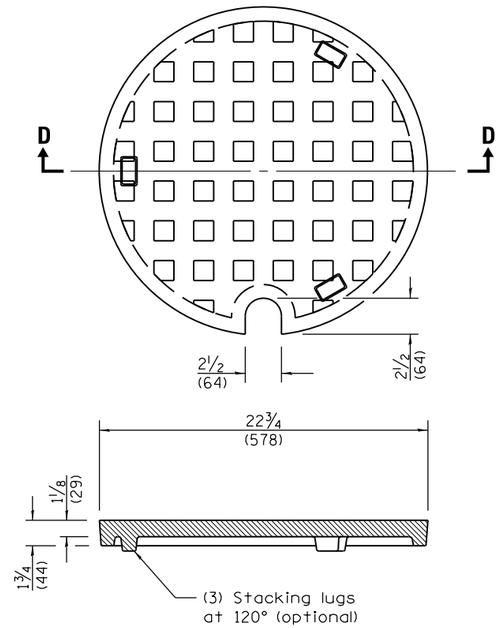


**SECTION D–D**

**CAST CLOSED LID**

Gray Iron

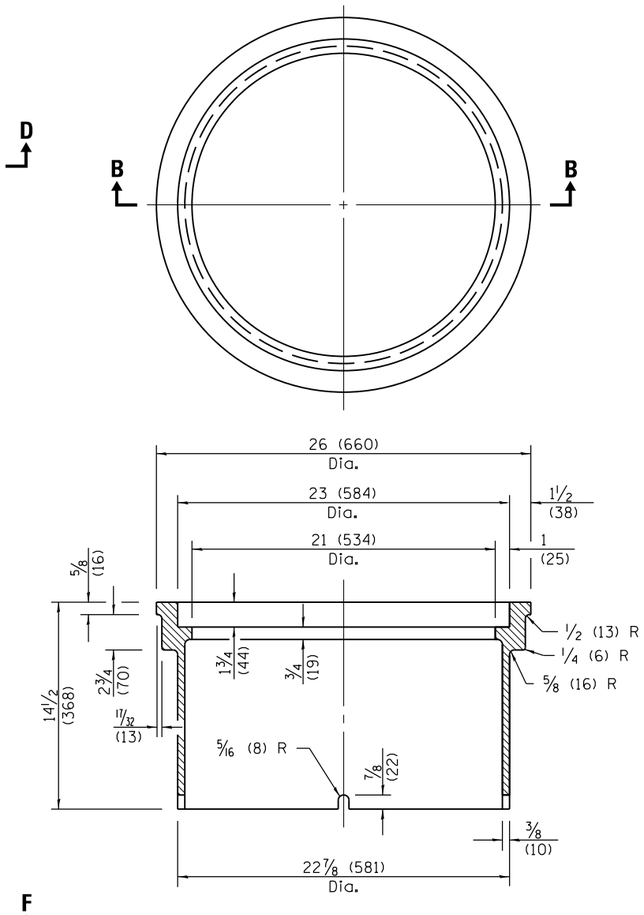


**SECTION B–B**

**CAST FRAME**

Gray Iron

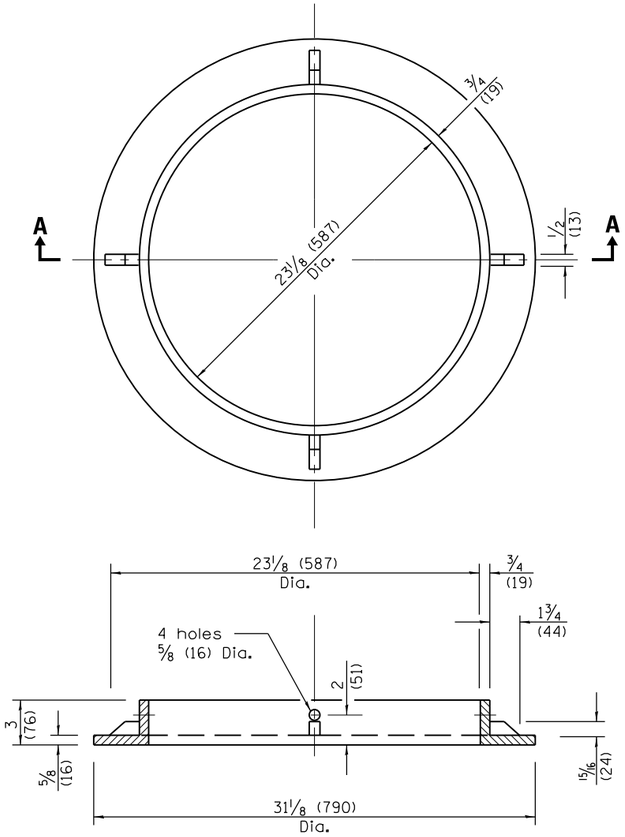


**SECTION A–A**

**CAST BASE**

Gray Iron

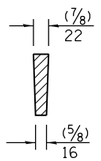


**SECTION E–E**

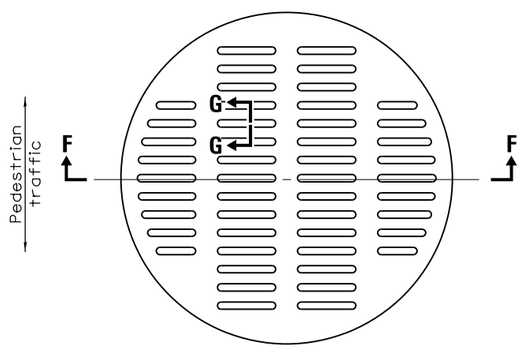


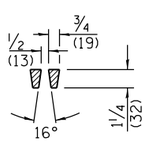


**SECTION G–G**

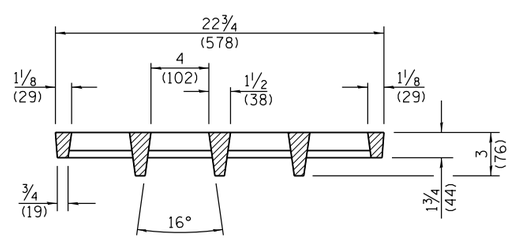


**SECTION F–F**

**ADA COMPLIANT**
**CAST OPEN LID**

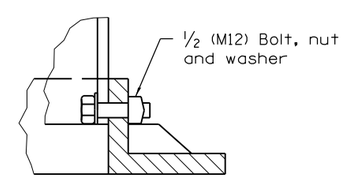


**DETAIL OF BOLTING**
**FRAME TO BASE**

NOTE: Bolts shall be removed after pavement has been placed.

**GENERAL NOTES**

The four holes in the cast base may be rotated 45° from the position shown in section A-A

All dimensions are in inches (millimeters) unless otherwise shown.

Illinois Department of Transportation

PASSED January 1, 2015
Michael Brand
ENGINEER OF POLICY AND PROCEDURES
APPROVED January 1, 2015
ENGINEER OF DESIGN AND ENVIRONMENT

ISSUED 1-1-97

| DATE | REVISIONS |
|---|---|
| 1-1-15 | Added ADA compliant open lid. |
| | |
| | |
| 1-1-09 | Switched units to |
| | English (metric). |
| | |

# BASE, FRAME AND LIDS TYPE 5

**STANDARD 604021–03**

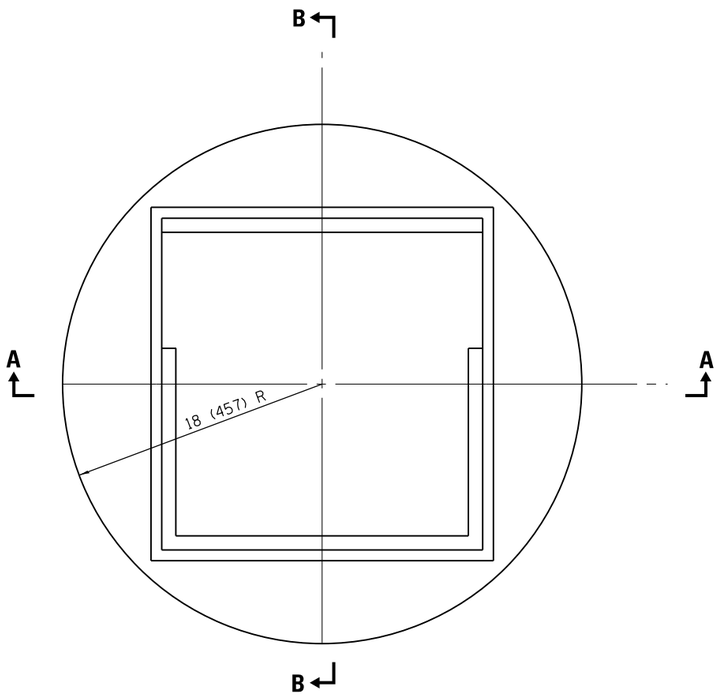


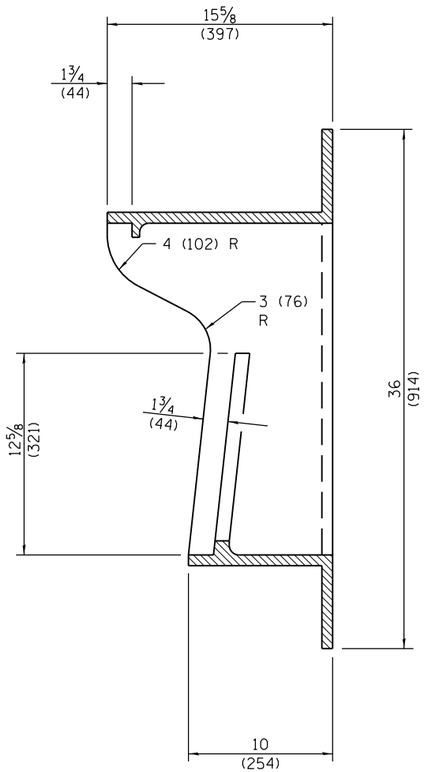


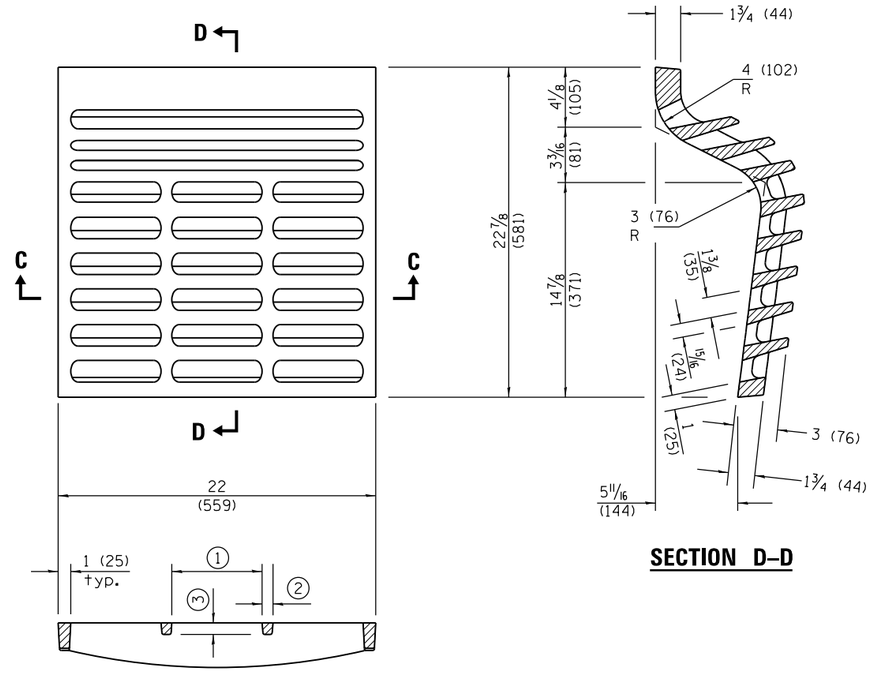


**SECTION D–D**

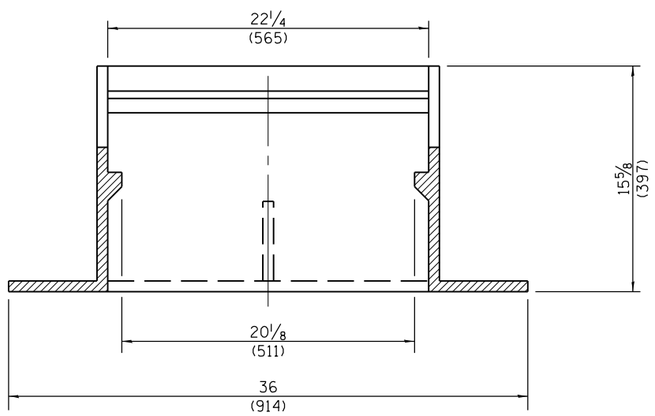


**SECTION A–A**

**SECTION B–B**

**SECTION C–C**

1 = 6 1/4 (159) max. (typ.)
2 = 3/4 (19) min. (typ.)
3 = 3/16 (21) min. (typ.)

**CAST GRATE**

**CAST FRAME**

All dimensions are in inches (millimeters) unless otherwise shown.

Illinois Department of Transportation

PASSED January 1, 2015
Michael Brand
ENGINEER OF POLICY AND PROCEDURES
APPROVED January 1, 2015
ENGINEER OF DESIGN AND ENVIRONMENT

ISSUED 1-1-97

| DATE | REVISIONS |
|---|---|
| 1-1-15 | Revised dimensions of frame and grate. |
| 1-1-09 | Switched units to English (metric). |

# FRAME AND GRATE TYPE 6

**STANDARD 604026–03**

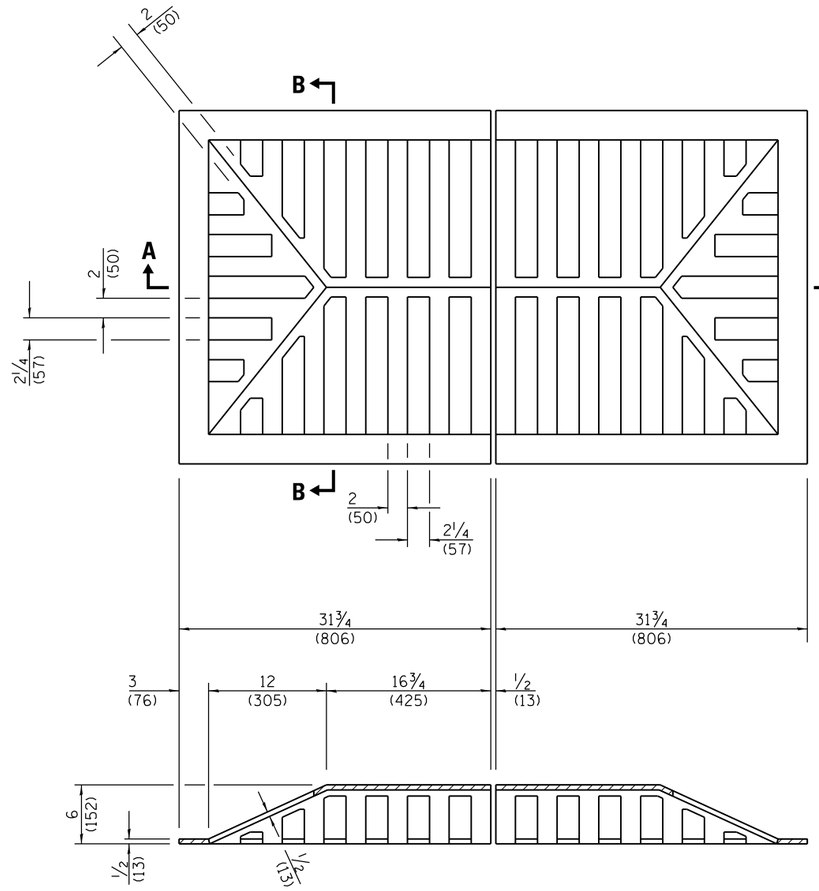


**SECTION A–A**

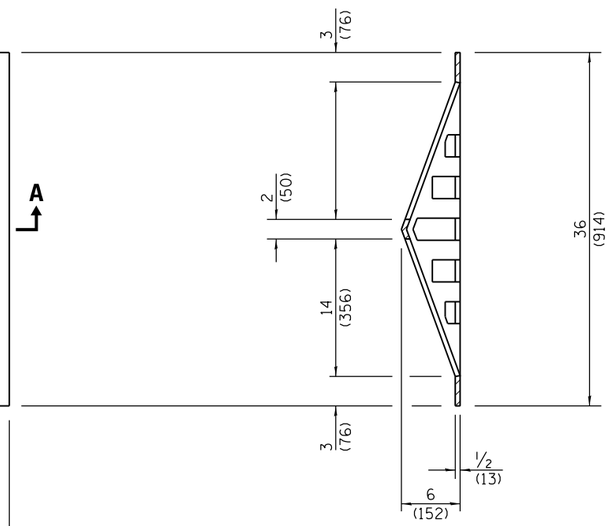


**SECTION B–B**

**CAST GRATE**

All dimensions are in inches (millimeters) unless otherwise shown.

Illinois Department of Transportation

PASSED January 1, 2015

Michael Brand
ENGINEER OF POLICY AND PROCEDURES

APPROVED January 1, 2015

ENGINEER OF DESIGN AND ENVIRONMENT

ISSUED 1-1-97

| DATE | REVISIONS |
|---|---|
| 1-1-15 | Revised grate thickness. |
| | |
| | |
| 1-1-09 | Switched units to |
| | English (metric). |
| | |

# GRATE TYPE 7

## STANDARD 604031–03

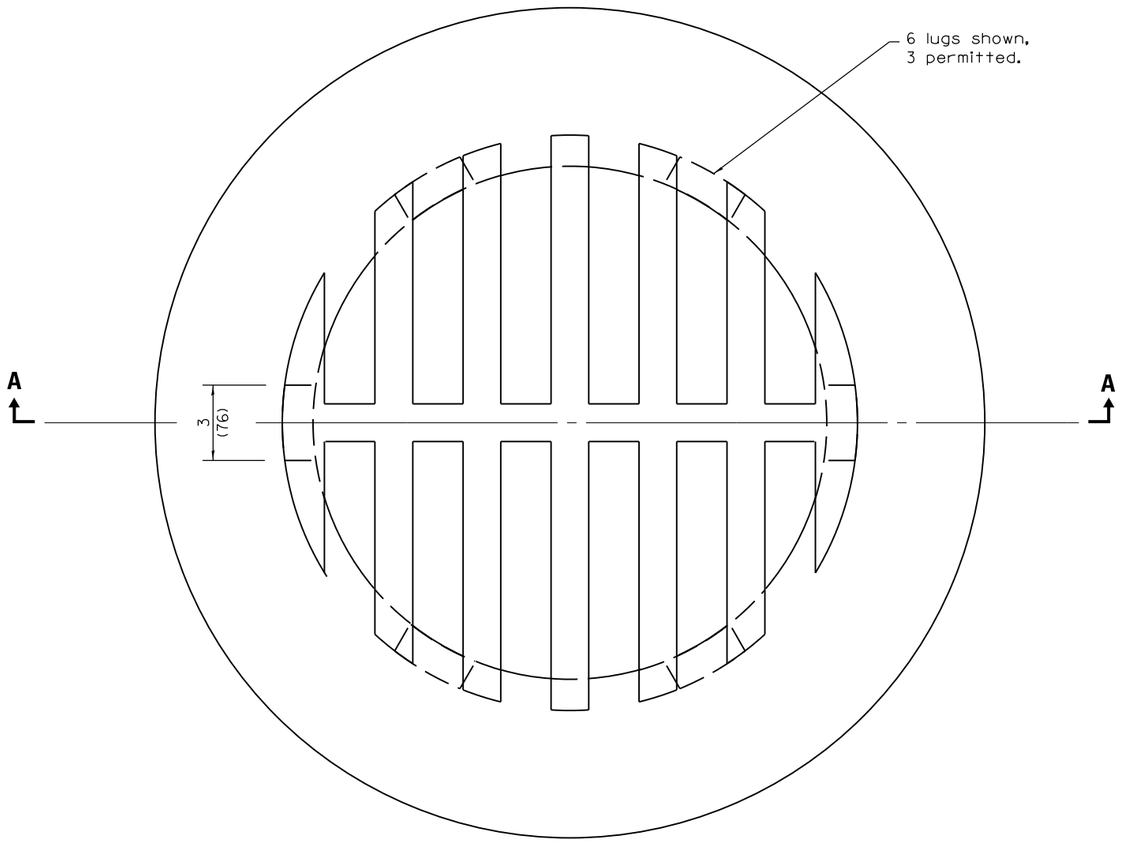


**CAST GRATE**

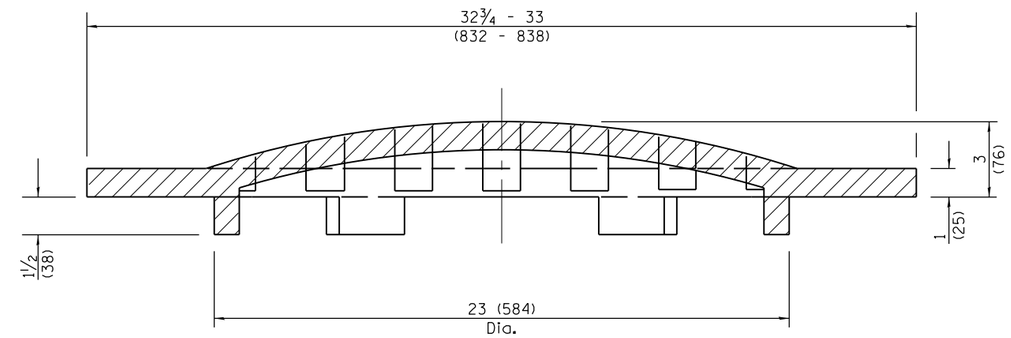


**SECTION A–A**

All dimensions are in inches (millimeters) unless otherwise shown.

Illinois Department of Transportation

PASSED January 1. 2015

Michael Brand
ENGINEER OF POLICY AND PROCEDURES

APPROVED January 1. 2015

ENGINEER OF DESIGN AND ENVIRONMENT

ISSUED 1-1-97

| DATE | REVISIONS |
|---|---|
| 1-1-15 | Revised dimensions. |
| | |
| | |
| 1-1-09 | Switched units to |
| | English (metric). |
| | |

# GRATE TYPE 8

**STANDARD 604036–03**

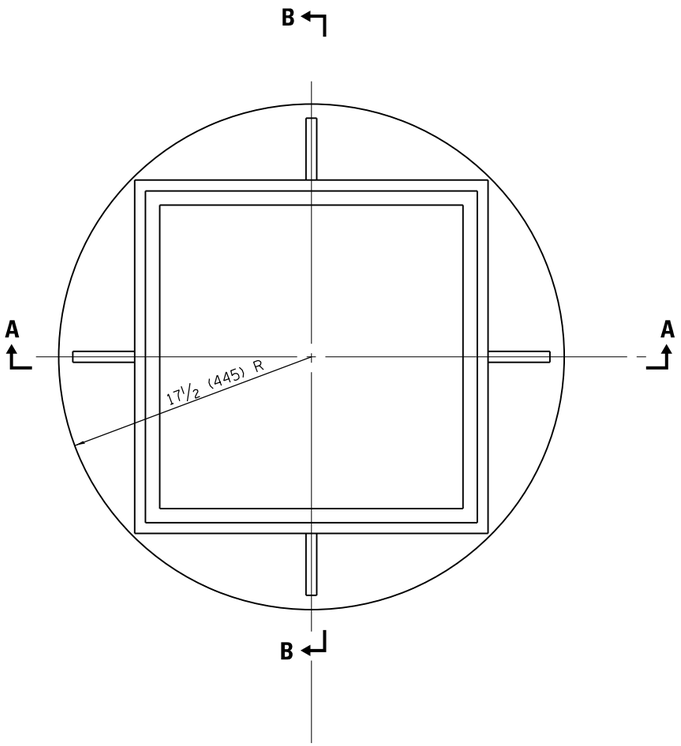


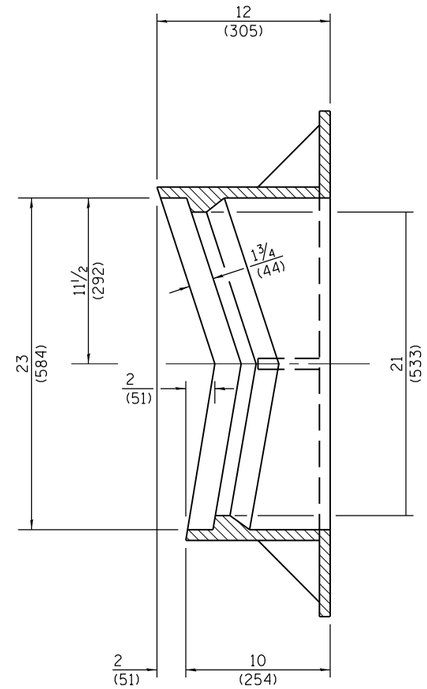


SECTION B–B

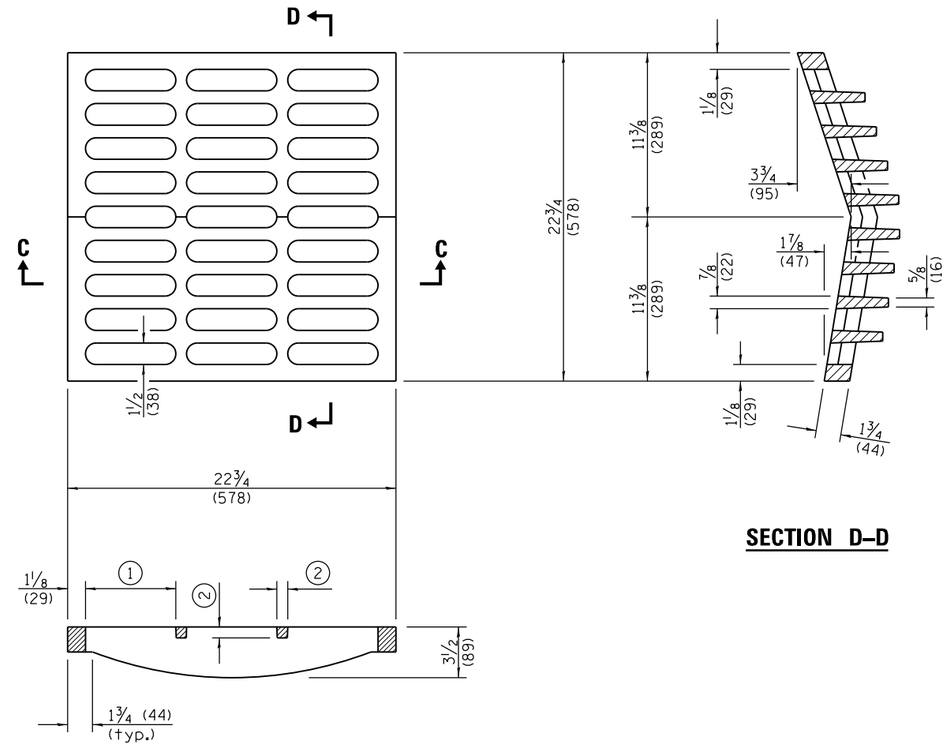


SECTION D–D

SECTION C–C

1 = 6 1/4 (159) max. (typ.)
2 = 3/4 (19) min. (typ.)

CAST GRATE

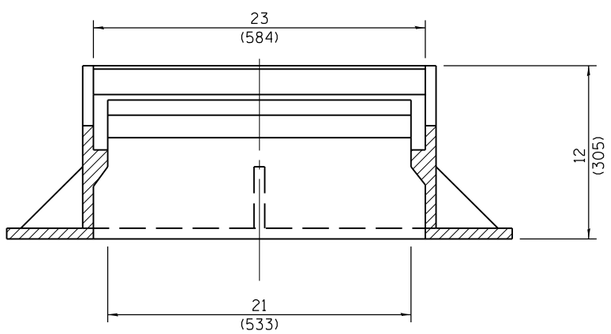


SECTION A–A

CAST FRAME

All dimensions are in inches (millimeters) unless otherwise shown.

Illinois Department of Transportation

PASSED January 1, 2015
Michael Brand
ENGINEER OF POLICY AND PROCEDURES
APPROVED January 1, 2015
ENGINEER OF DESIGN AND ENVIRONMENT

ISSUED 1-1-97

| DATE | REVISIONS |
|---|---|
| 1-1-15 | Revised dimensions of |
| | frame. |
| | |
| 1-1-09 | Switched units to |
| | English (metric). |
| | |

# FRAME AND GRATE TYPE 9

STANDARD 604041–03

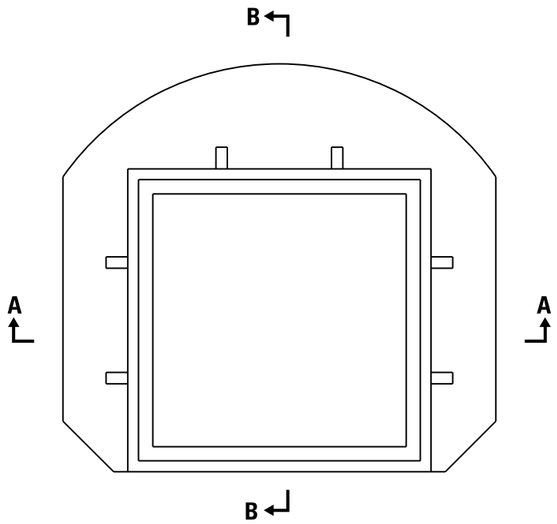


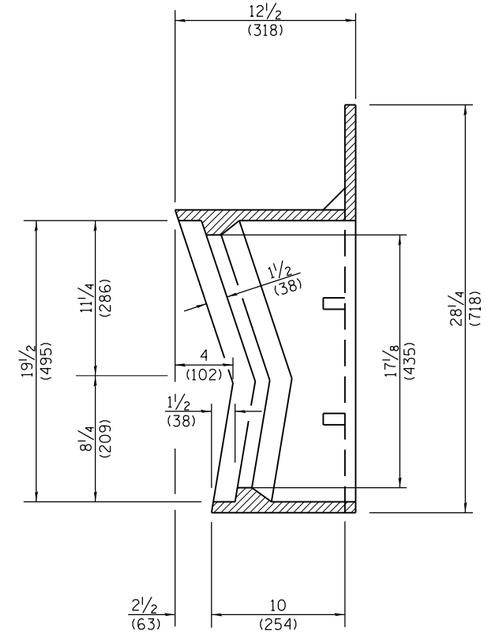


**SECTION B–B**

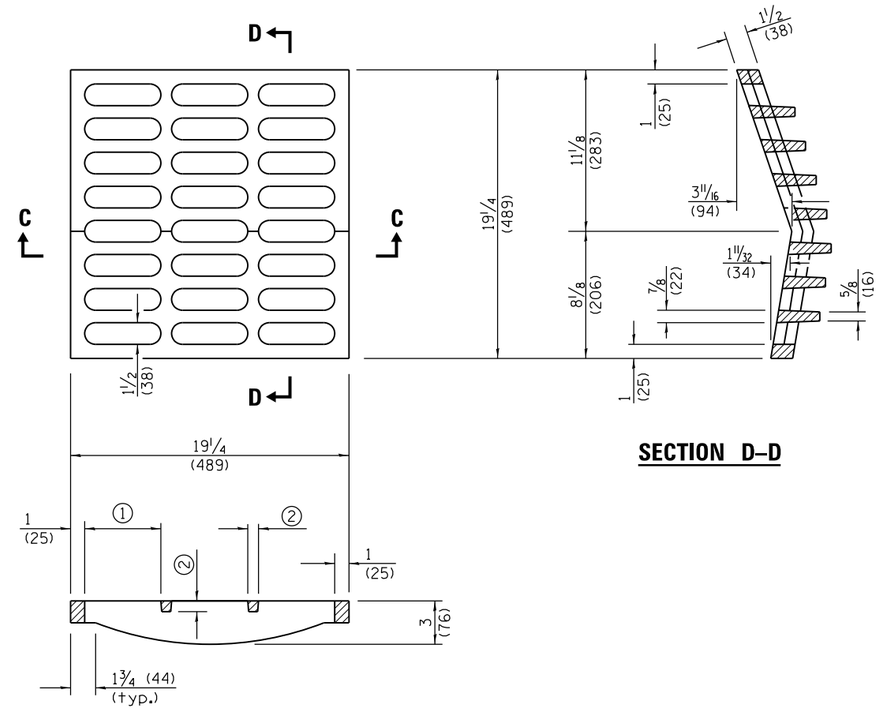


**SECTION D–D**

**SECTION C–C**

① = 6 1/4 (159) max. (typ.)

② = 3/4 (19) min. (typ.)

**CAST GRATE**

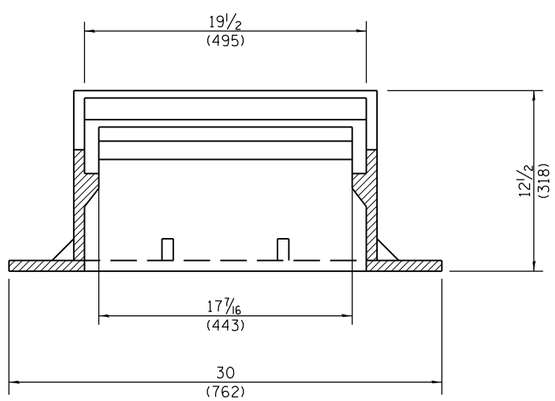


**SECTION A–A**

**CAST FRAME**

All dimensions are in inches (millimeters) unless otherwise shown.

Illinois Department of Transportation

PASSED January 1, 2015

Michael Brand
ENGINEER OF POLICY AND PROCEDURES

APPROVED January 1, 2015

ENGINEER OF DESIGN AND ENVIRONMENT

ISSUED 1-1-97

| DATE | REVISIONS |
|---|---|
| 1-1-15 | Revised dimensions of frame. |
| 1-1-09 | Switched units to English (metric). |

# FRAME AND GRATE TYPE 10

**STANDARD 604046–03**

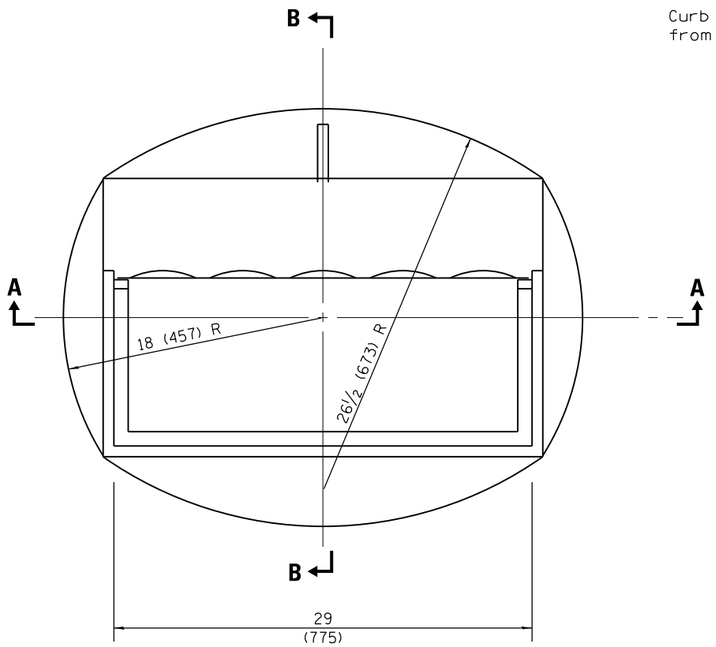


**CAST FRAME**

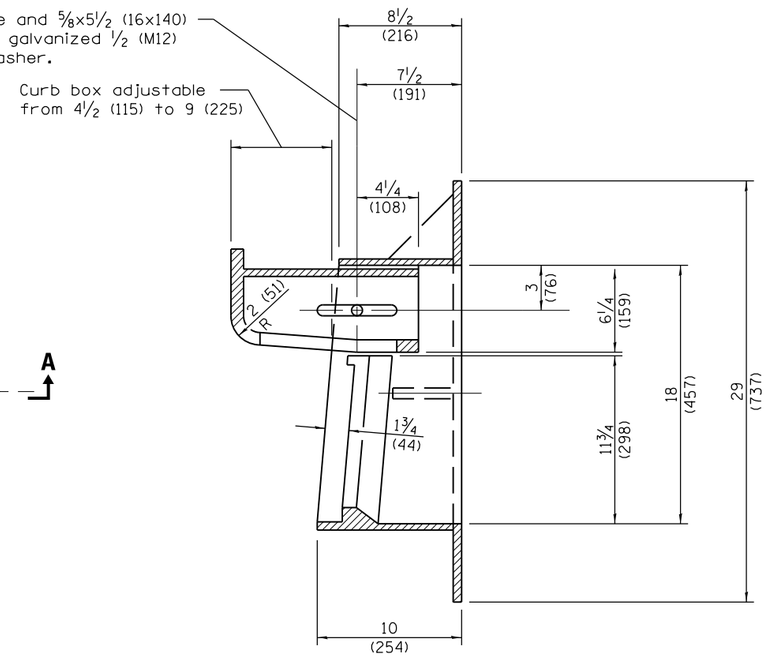


**SECTION B–B**

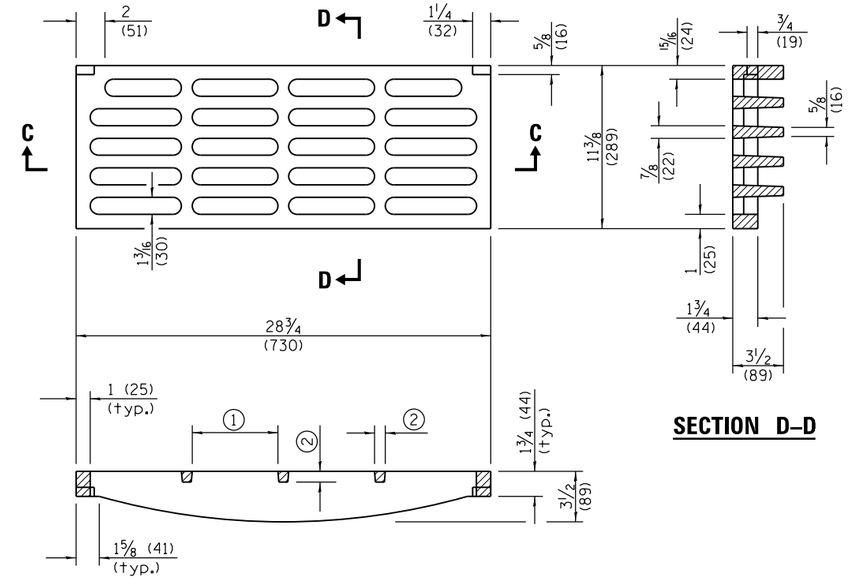


**SECTION D–D**

**SECTION C–C**

① = 6¼ (159) max. (typ.)

② = ¾ (19) min. (typ.)

**CAST GRATE**

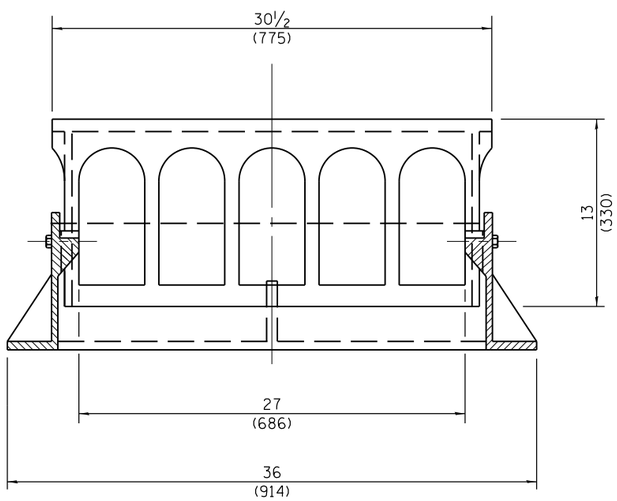


**SECTION A–A**

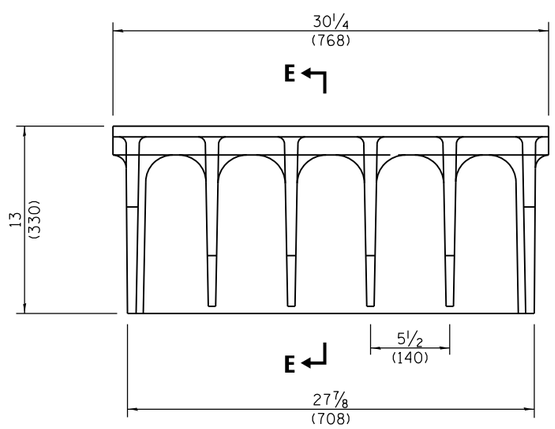


**ALTERNATE CURB BOX**

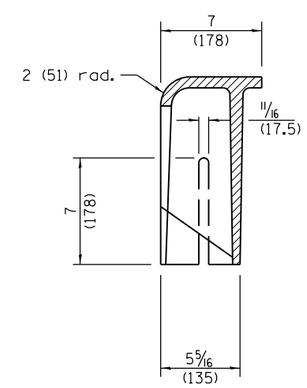


**SECTION E–E**

All dimensions are in inches (millimeters) unless otherwise shown.

Illinois Department of Transportation

PASSED January 1, 2015

Michael Brand
ENGINEER OF POLICY AND PROCEDURES

APPROVED January 1, 2015

ENGINEER OF DESIGN AND ENVIRONMENT

ISSUED 1-1-97

| DATE | REVISIONS |
|---|---|
| 1-1-15 | Revised dimensions of frame |
| | and alternate curb box. |
| | |
| 4-1-09 | Switched units to |
| | English (metric). |
| | |

# FRAME AND GRATE TYPE 11

**STANDARD 604051–04**

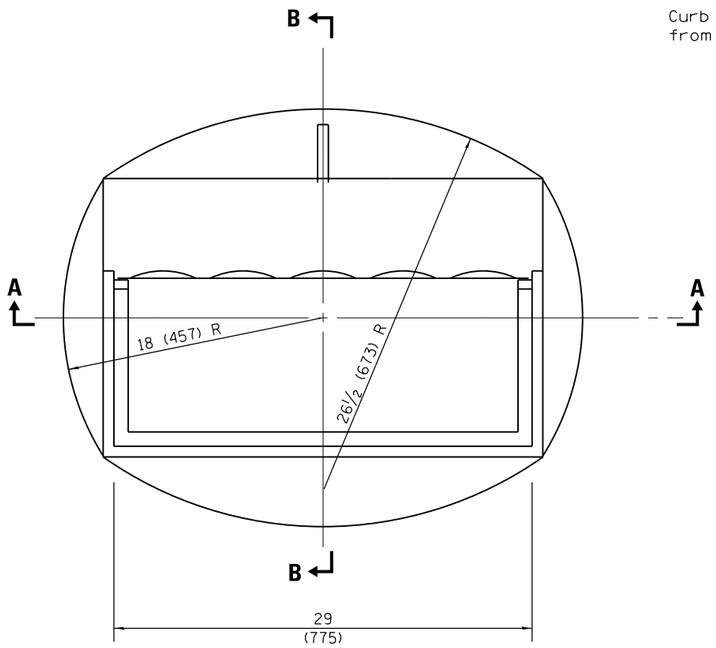


**CAST FRAME**

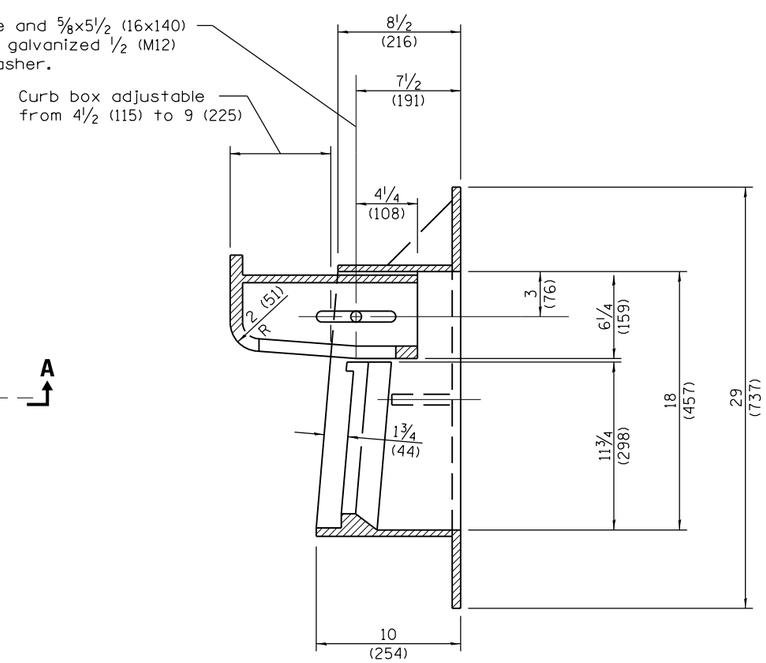


**SECTION B–B**

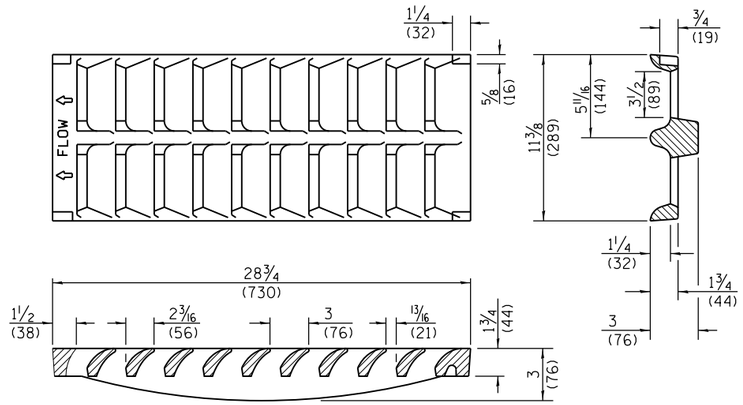


**CAST GRATE**

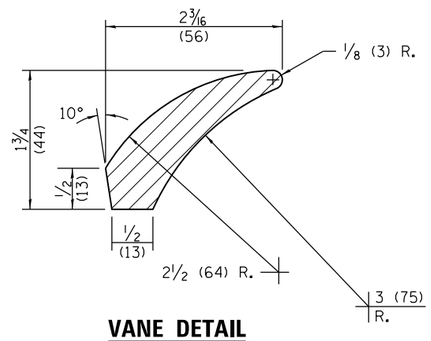


**VANE DETAIL**

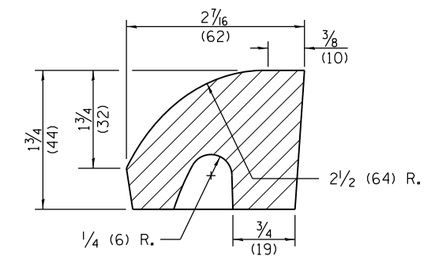


**FRONT VANE DETAIL**

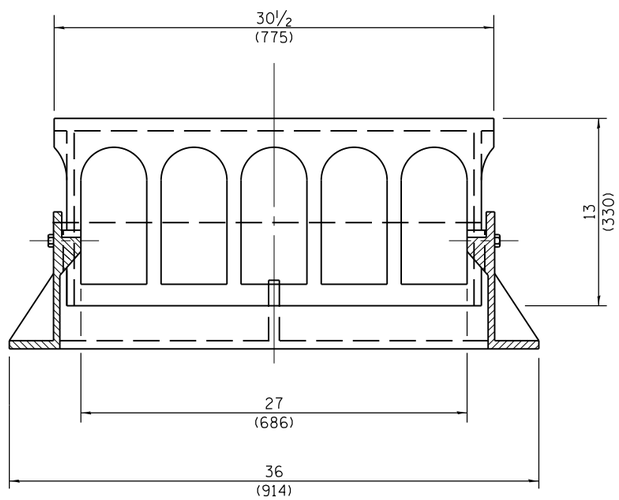


**SECTION A–A**

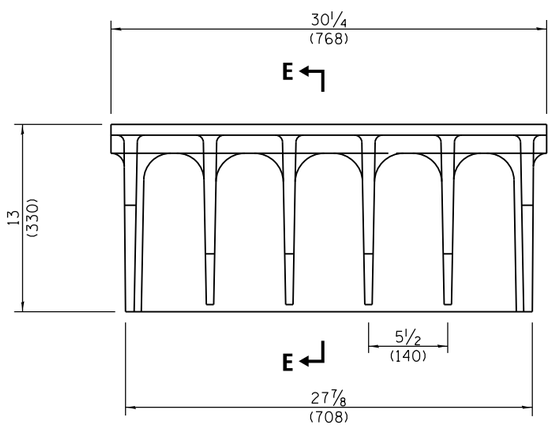


**ALTERNATE CURB BOX**

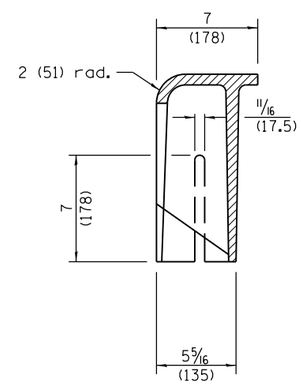


**SECTION E–E**

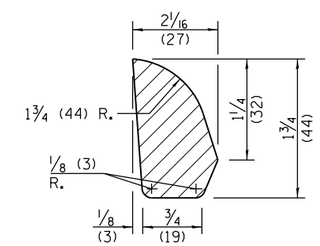


**SIDE RIB DETAIL**

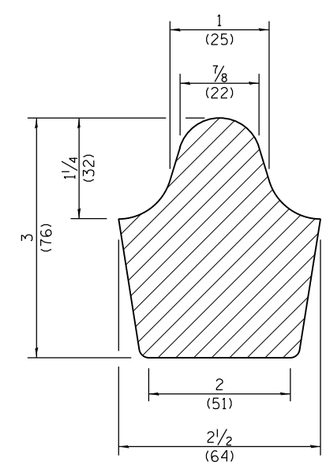


**MIDDLE RIB DETAIL**

All dimensions are in inches (millimeters) unless otherwise shown.

Illinois Department of Transportation

PASSED January 1, 2015
Michael Brand
ENGINEER OF POLICY AND PROCEDURES
APPROVED January 1, 2015
ENGINEER OF DESIGN AND ENVIRONMENT

ISSUED 1-1-97

| DATE | REVISIONS |
|---|---|
| 1-1-15 | Revised dimensions of frame and alternate curb box. |
| 1-1-09 | Switched units to English (metric). |

# FRAME AND GRATE TYPE 11V

**STANDARD 604056–04**

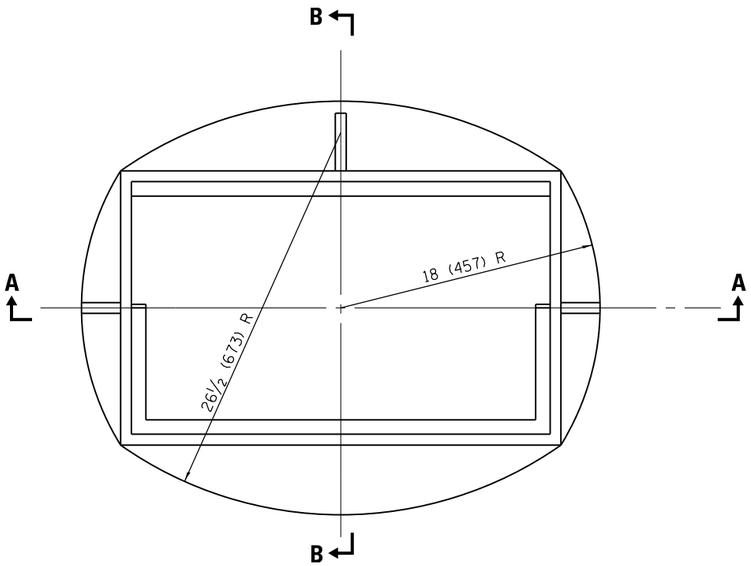


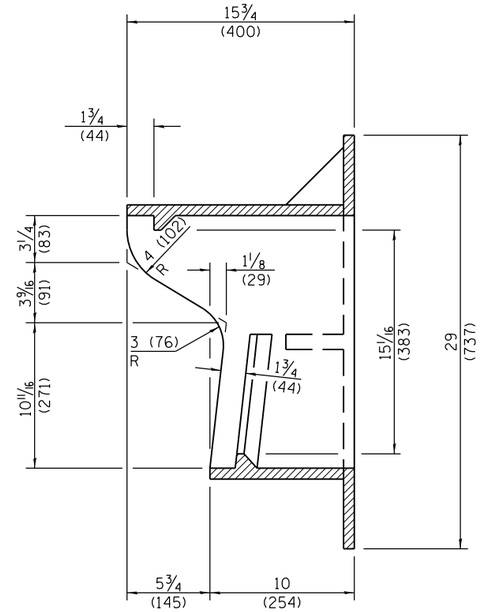


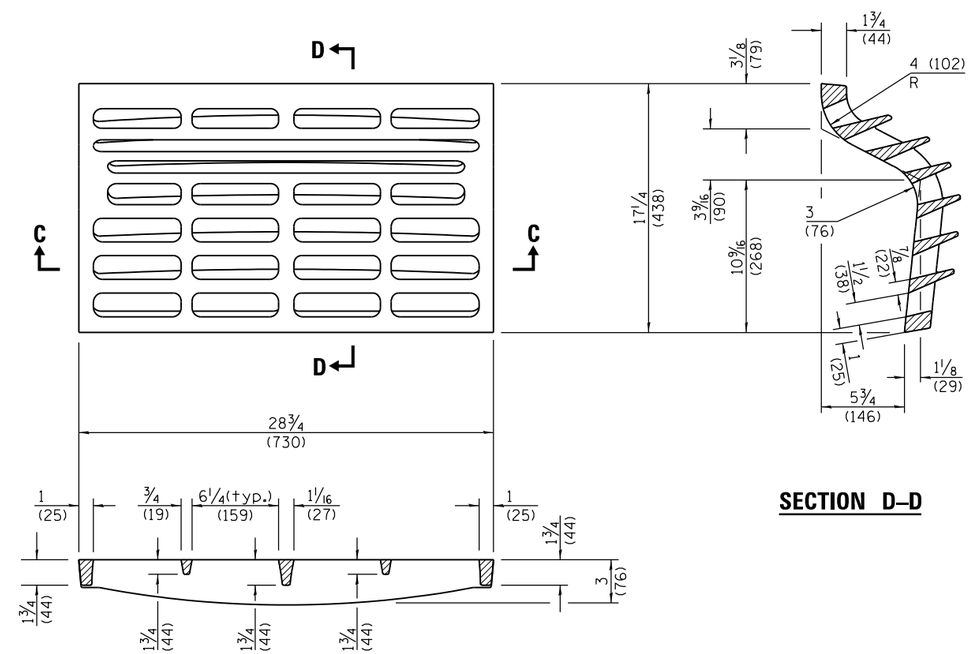


**SECTION D–D**

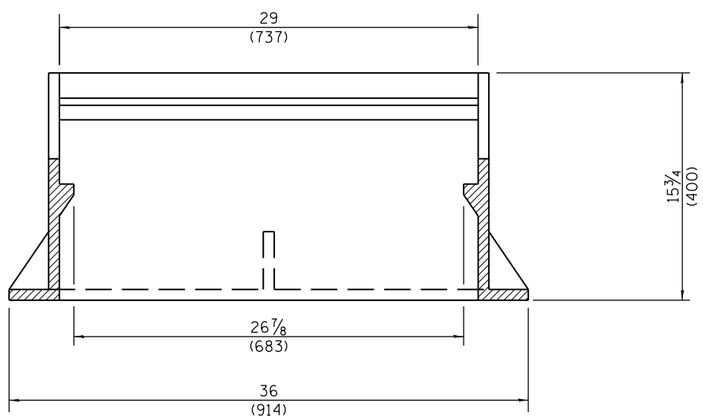


**SECTION B–B**

**SECTION C–C**

**SECTION A–A**

**CAST GRATE**

**CAST FRAME**

All dimensions are in inches (millimeters) unless otherwise shown.

Illinois Department of Transportation

PASSED January 1, 2015

Michael Brand
ENGINEER OF POLICY AND PROCEDURES

APPROVED January 1, 2015

ENGINEER OF DESIGN AND ENVIRONMENT

ISSUED 1-1-97

| DATE | REVISIONS |
|---|---|
| 1-1-15 | Revised dimensions of |
| | frame and grate. |
| | |
| 1-1-09 | Switched units to |
| | English (metric). |
| | |

# FRAME AND GRATE TYPE 12

**STANDARD 604061–03**

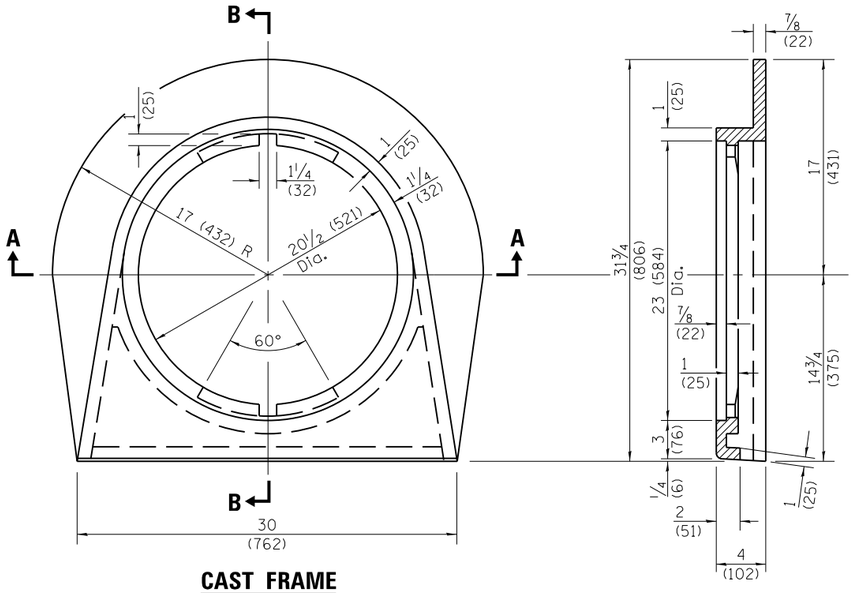


**CAST FRAME**

(GRAY IRON)

**SECTION B–B**

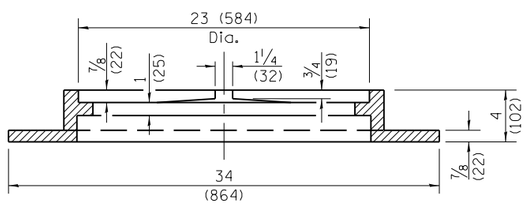


**SECTION A–A**

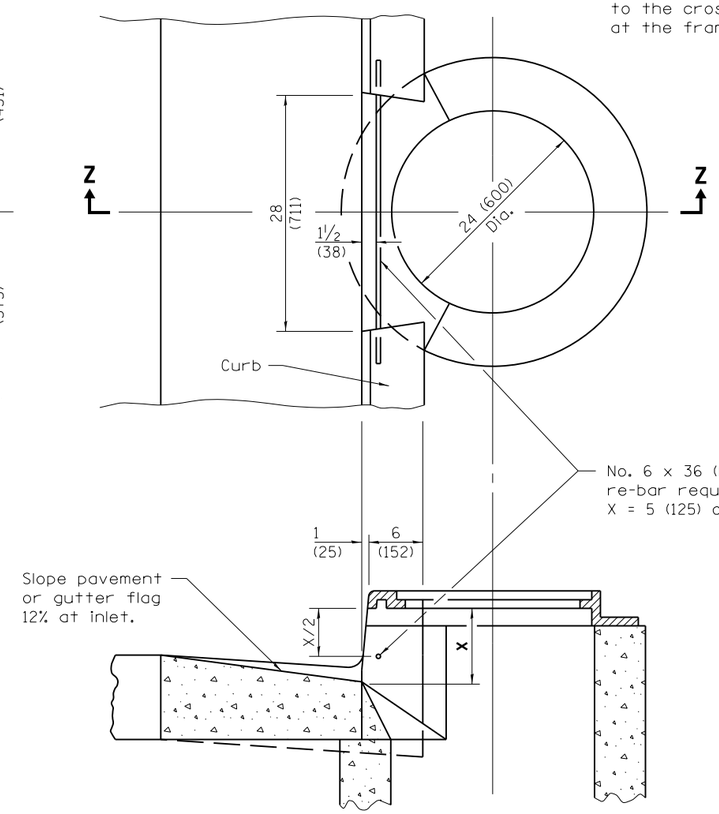


**SECTION Z–Z**

(WITH FRAME)

**CASE II**

NOTE:
Warp sloping face of curbs in a distance of 5' (1.5 m) to the cross section shown at the frame.

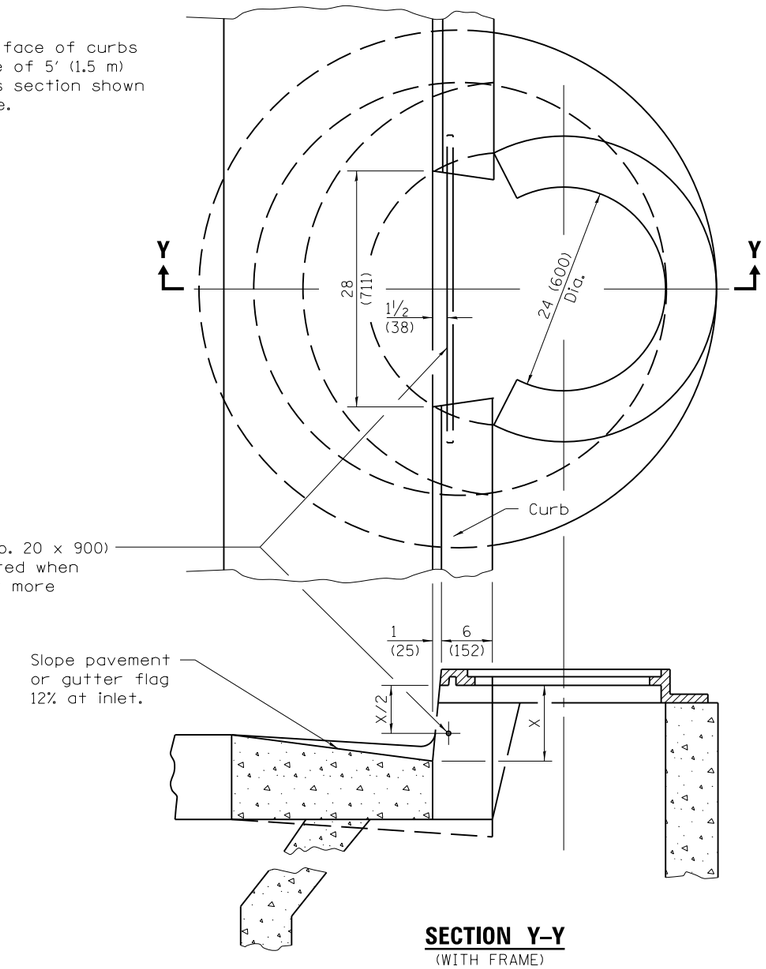


**SECTION Y–Y**

(WITH FRAME)

**CASE I**

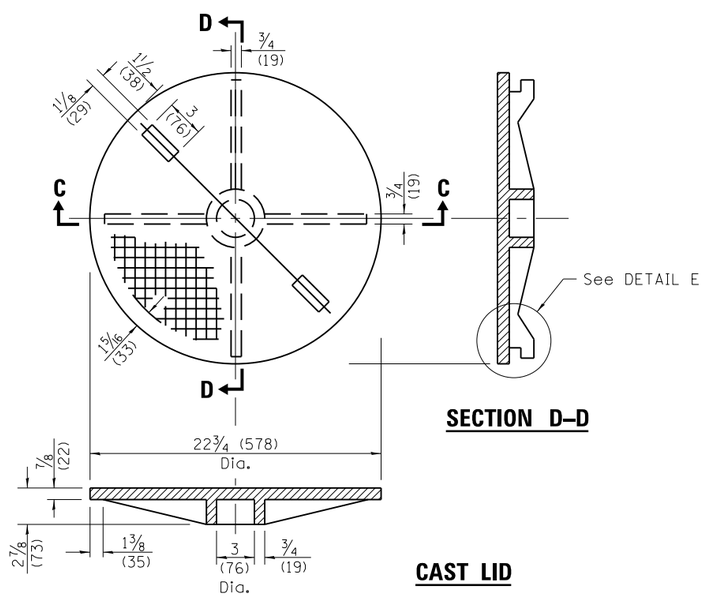


**SECTION D–D**

**CAST LID**

**SECTION C–C**

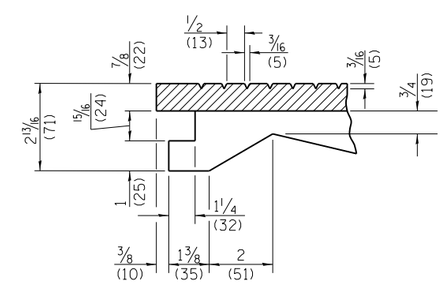


**DETAIL E**

All dimensions are in inches (millimeters) unless otherwise shown.

Illinois Department of Transportation

PASSED January 1, 2009
ENGINEER OF POLICY AND PROCEDURES

APPROVED January 1, 2009
ENGINEER OF DESIGN AND ENVIRONMENT

ISSUED 1-1-97

| DATE | REVISIONS |
|---|---|
| 1-1-09 | Switched units to |
| | English (metric). |
| | |
| 1-1-04 | Removed weights. |
| | |
| | |

# FRAME AND LID TYPE 15

**STANDARD 604066–02**

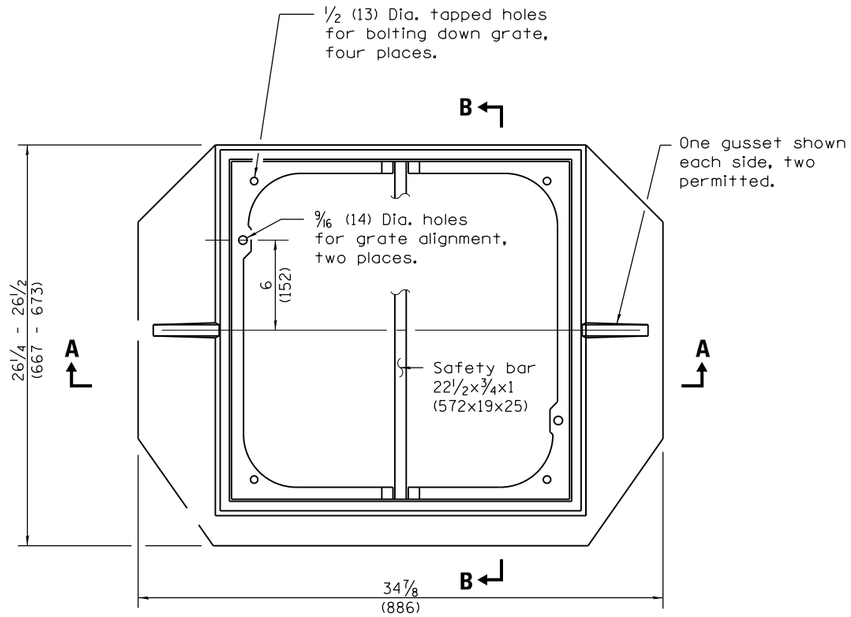


**PLAN**

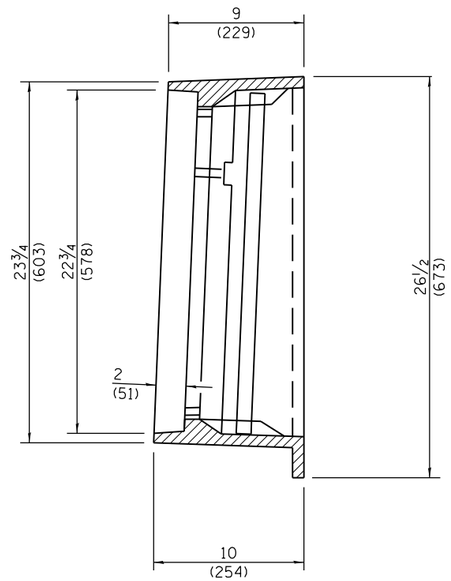


**SECTION B–B**

**CAST FRAME**

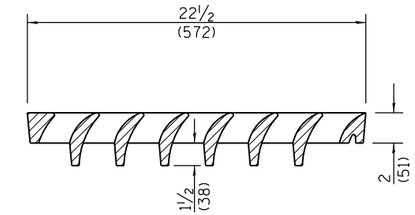


**SECTION C–C**

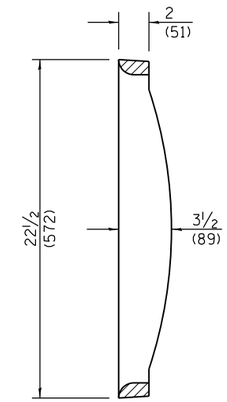


**SECTION D–D**

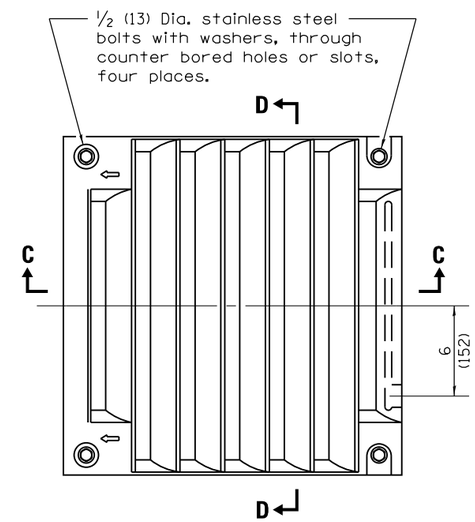


**CAST GRATE**

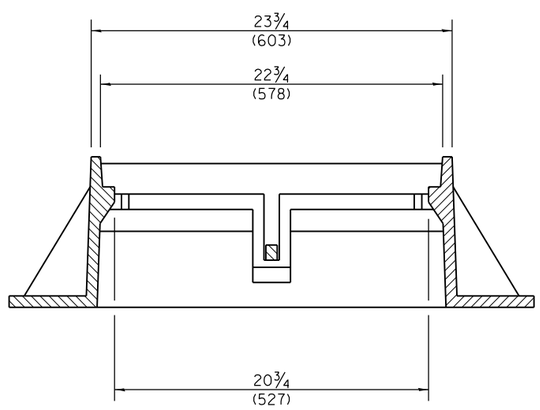


**SECTION A–A**

All dimensions are in inches (millimeters) unless otherwise shown.

Illinois Department of Transportation

PASSED January 1, 2015
Michael Brand
ENGINEER OF POLICY AND PROCEDURES
APPROVED January 1, 2015
ENGINEER OF DESIGN AND ENVIRONMENT

ISSUED 1-1-97

| DATE | REVISIONS |
|---|---|
| 1-1-15 | Revised dimensions of |
| | frame. |
| | |
| 1-1-09 | Switched units to |
| | English (metric). |
| | |

# FRAME AND GRATE TYPE 20

**STANDARD 604071–05**

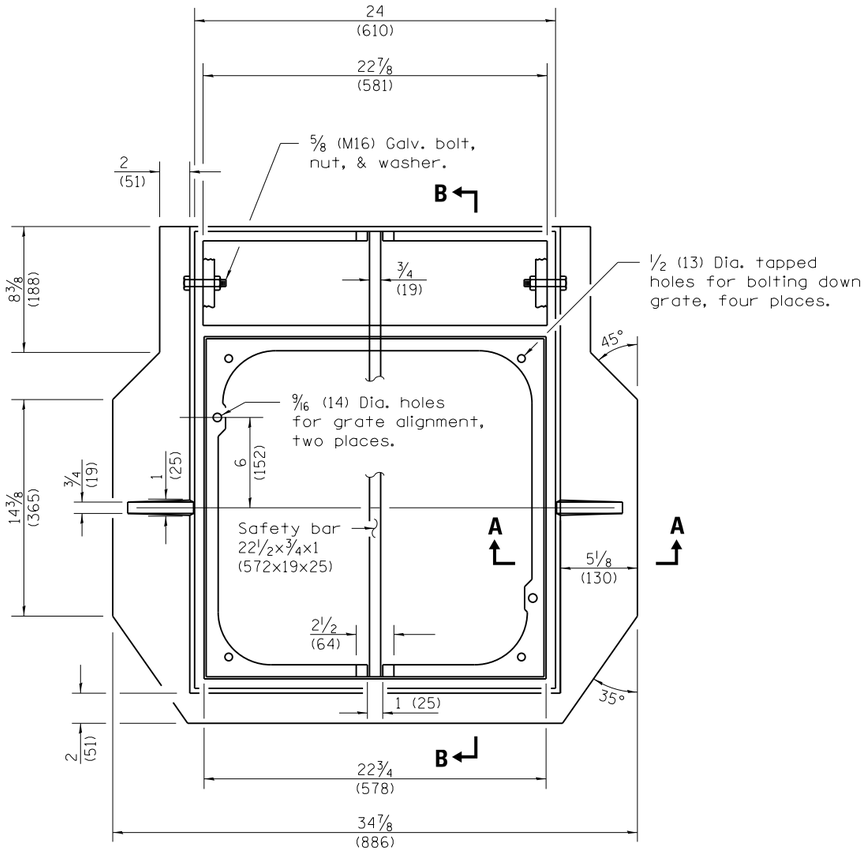


**PLAN**

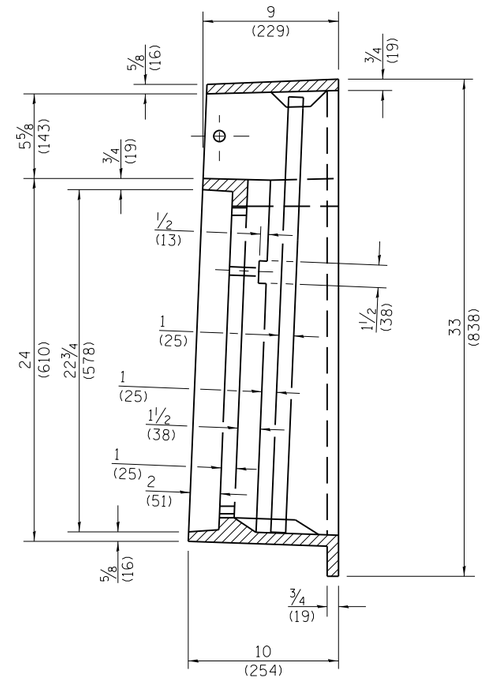


**SECTION B–B**

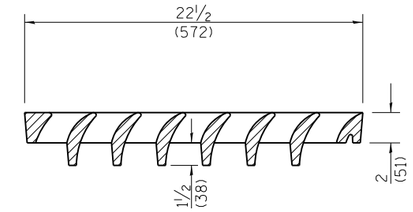


**SECTION C–C**

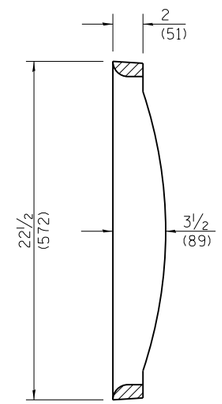


**SECTION D–D**

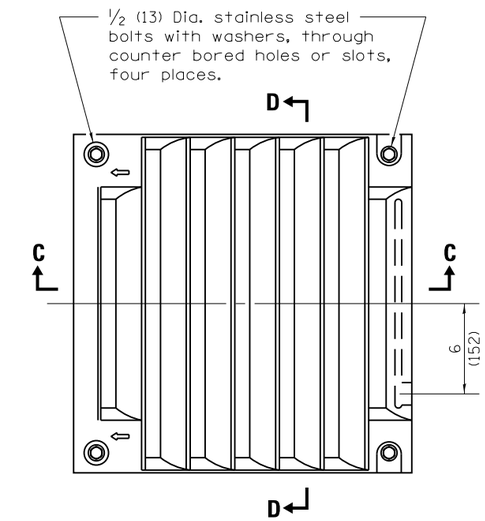


**CAST GRATE**

**CAST FRAME**

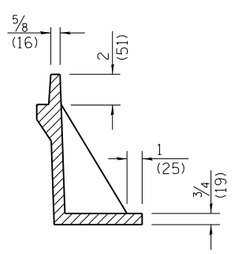


**SECTION A–A**

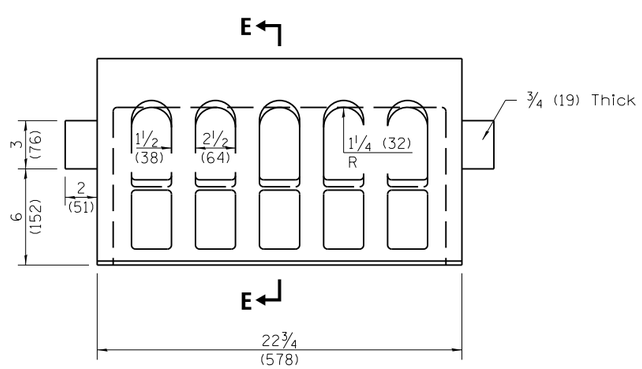


**CURB BOX**

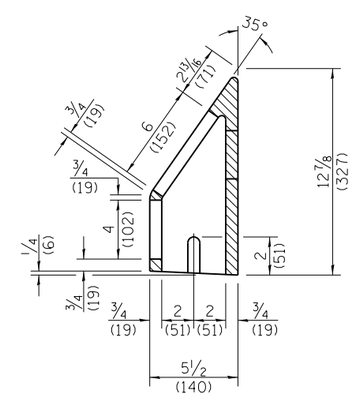


**SECTION E–E**

All dimensions are in inches (millimeters) unless otherwise shown.

Illinois Department of Transportation

PASSED January 1, 2009
ENGINEER OF POLICY AND PROCEDURES
APPROVED January 1, 2009
ENGINEER OF DESIGN AND ENVIRONMENT

ISSUED 1-1-97

| DATE | REVISIONS |
|---|---|
| 1-1-09 | Switched units to |
| | English (metric). |
| | |
| 1-1-07 | Revised frame flanges, |
| | changed to a bolt down |
| | grate w/ deeper vanes. |

# FRAME AND GRATE TYPE 21

**STANDARD 604076–04**

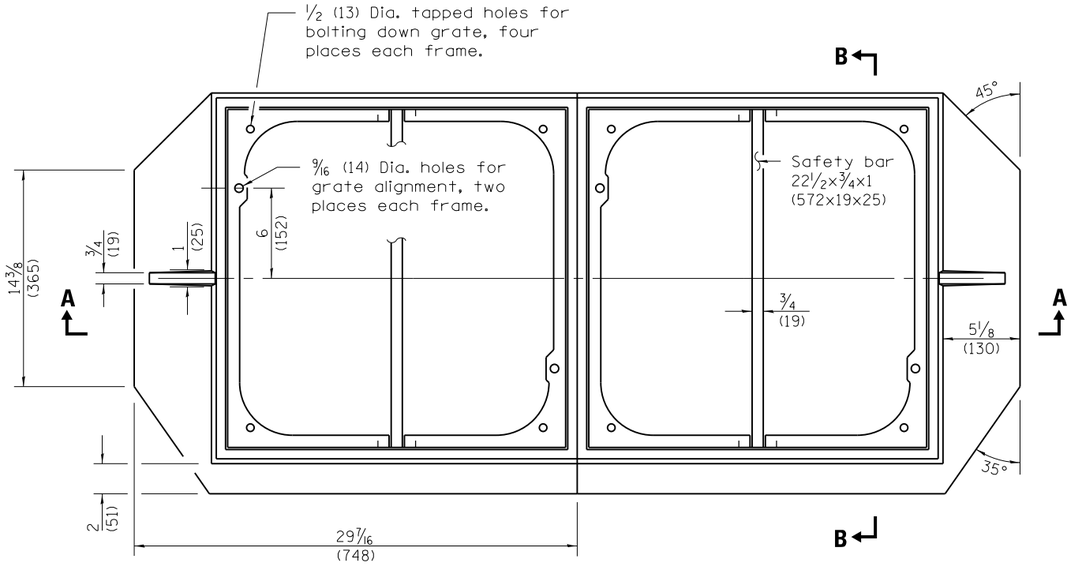


**PLAN**

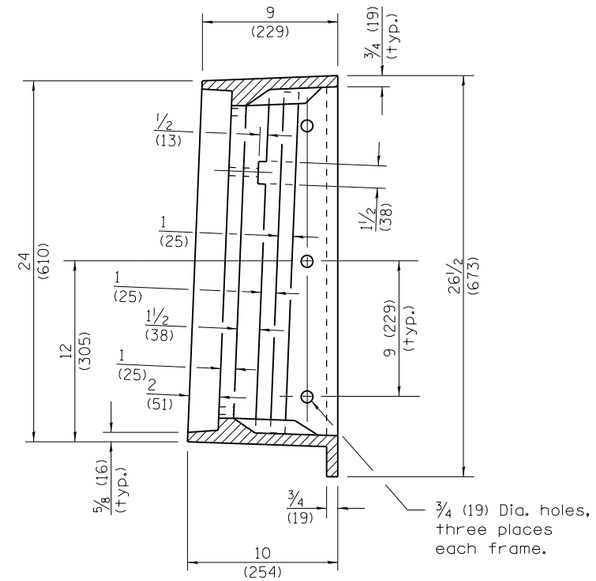


**SECTION B–B**

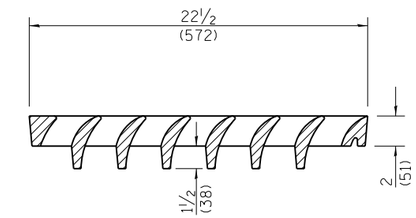


**SECTION C–C**

**CAST FRAME**

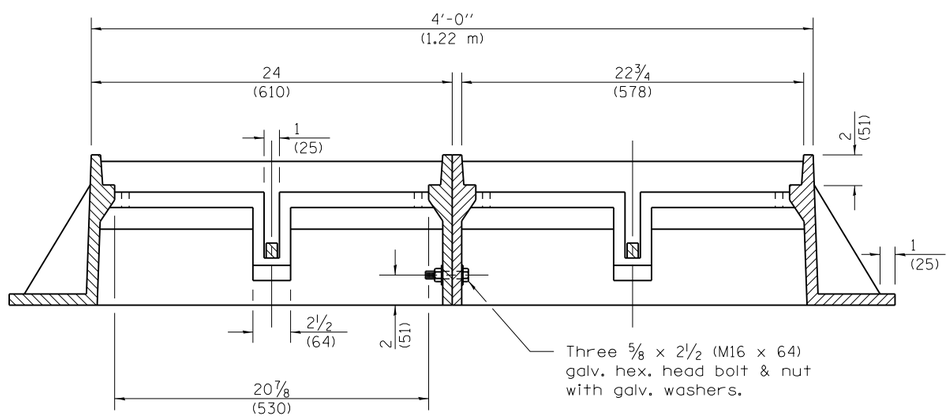


**SECTION A–A**

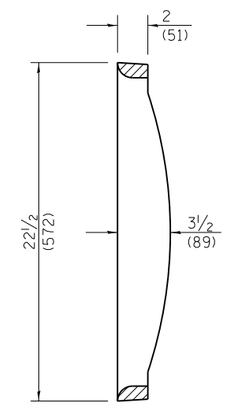


**SECTION D–D**

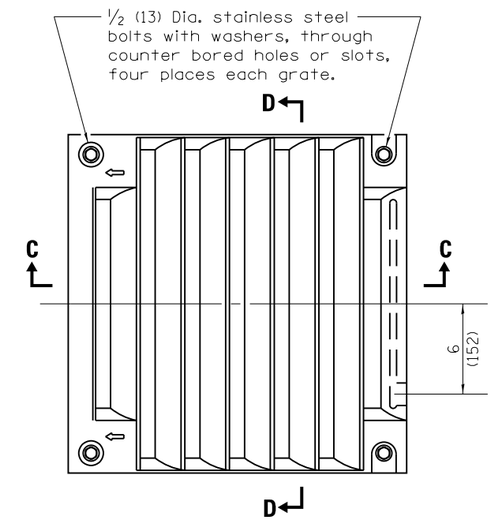


**CAST GRATE**

All dimensions are in inches (millimeters) unless otherwise shown.

Illinois Department of Transportation

PASSED January 1, 2009
ENGINEER OF POLICY AND PROCEDURES

APPROVED January 1, 2009
ENGINEER OF DESIGN AND ENVIRONMENT

ISSUED 1-1-07

| DATE | REVISIONS |
|---|---|
| 1-1-09 | Switched units to |
| | English (metric). |
| | |
| 1-1-07 | Revised frame flanges, |
| | changed to a bolt down |
| | grate w/ deeper vanes. |

# FRAMES AND GRATES TYPE 22

**STANDARD 604081–04**

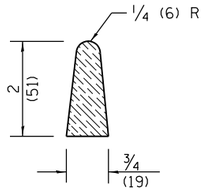


**DETAIL A**

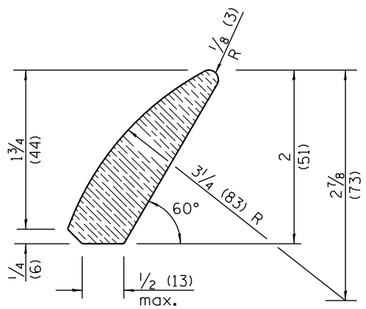


**DETAIL B**

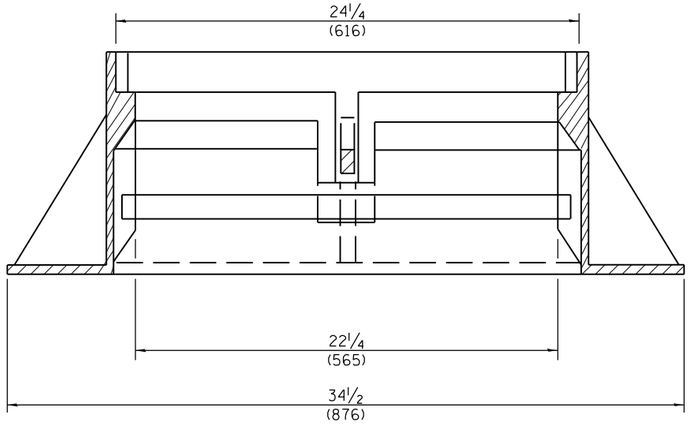


**SECTION D–D**

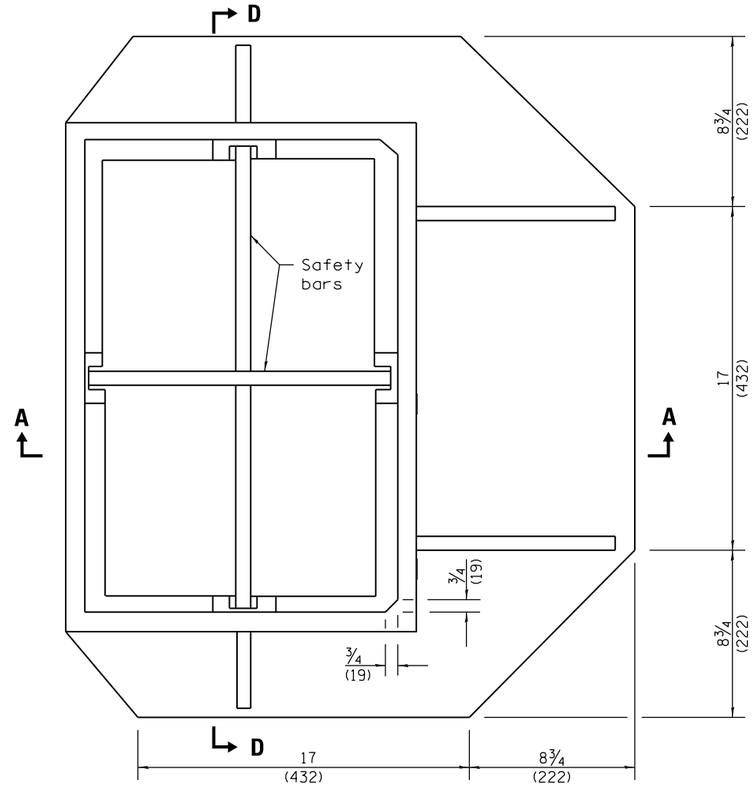


**PLAN – FRAME**

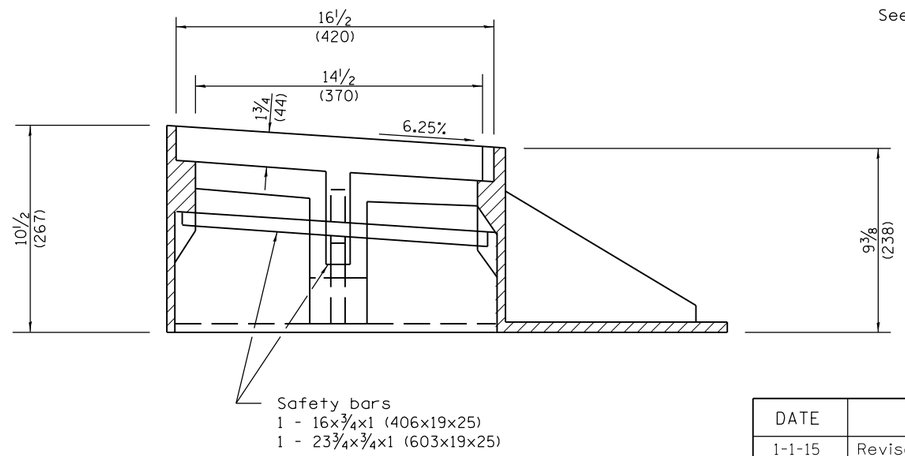


**SECTION A–A**

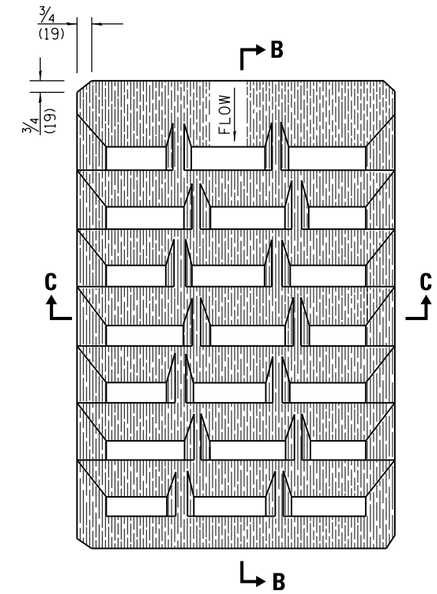


**GRATE**

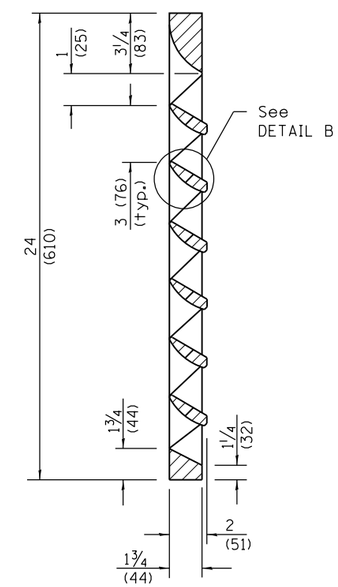


**SECTION B–B**

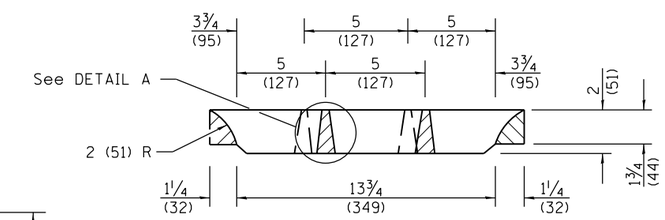


**SECTION C–C**

All dimensions are in inches (millimeters) unless otherwise shown.

Illinois Department of Transportation

PASSED January 1, 2015
Michael Brand
ENGINEER OF POLICY AND PROCEDURES
APPROVED January 1, 2015
ENGINEER OF DESIGN AND ENVIRONMENT

ISSUED 1-1-97

| DATE | REVISIONS |
|---|---|
| 1-1-15 | Revised dimensions of |
| | frame. |
| | |
| 1-1-09 | Switched units to |
| | English (metric). |
| | |

# FRAME AND GRATE TYPE 23

**STANDARD 604086–03**

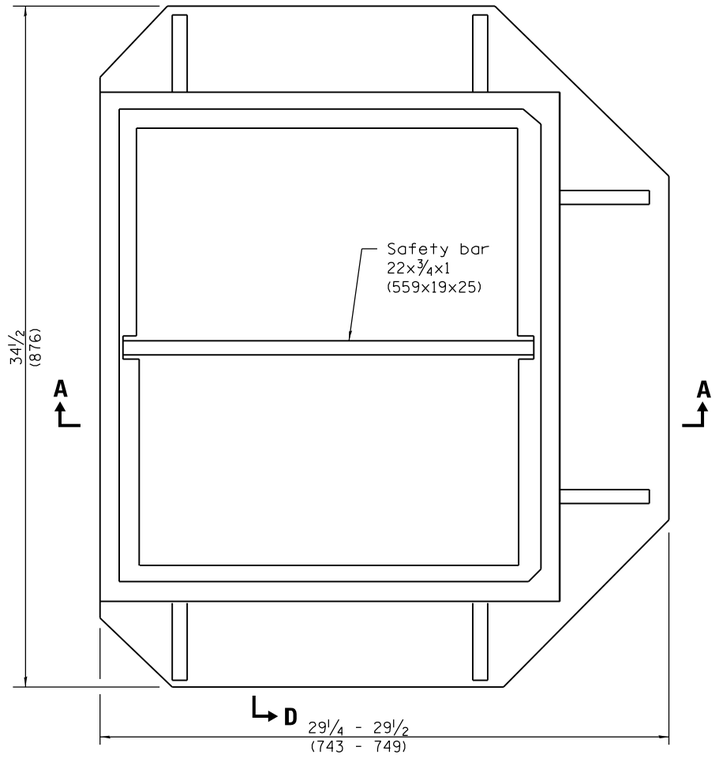


**PLAN – FRAME**

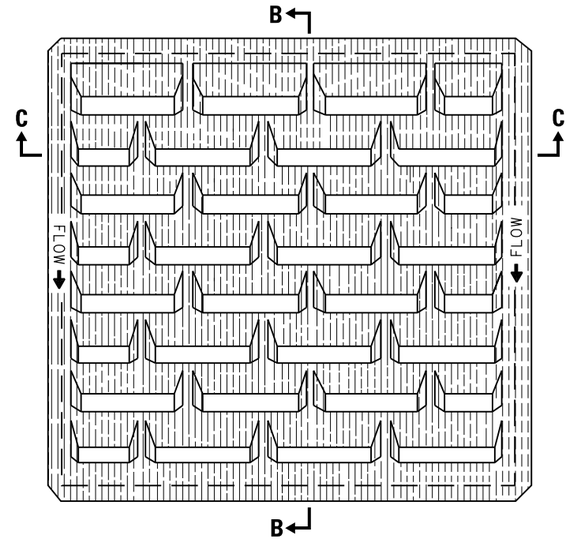


**GRATE**

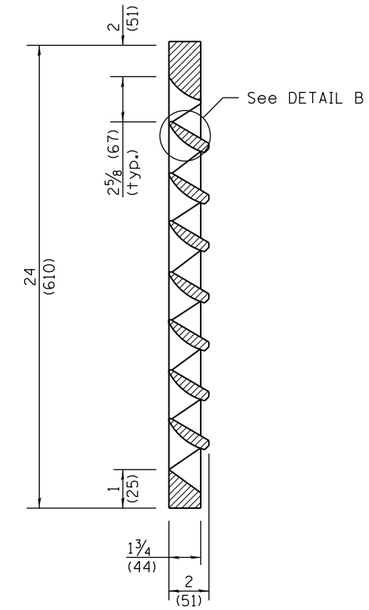


**SECTION B–B**

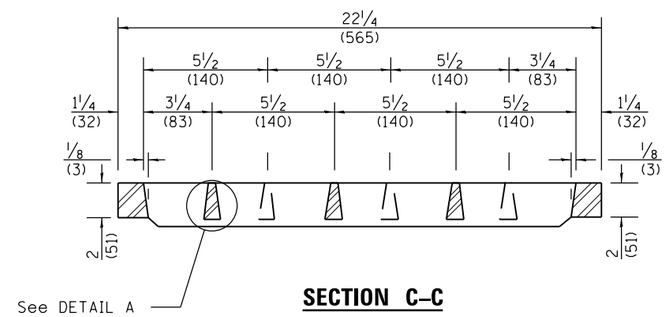


**SECTION C–C**

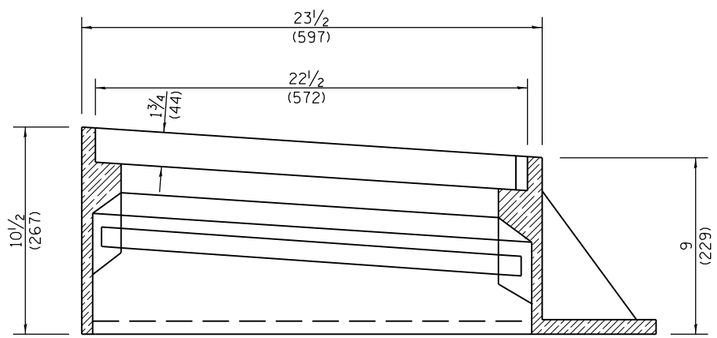


**SECTION A–A**

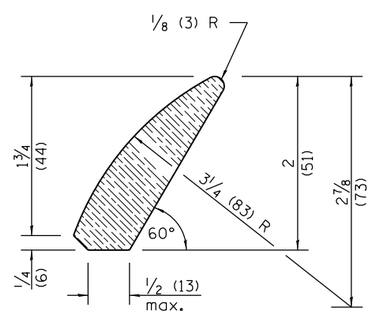


**DETAIL B**

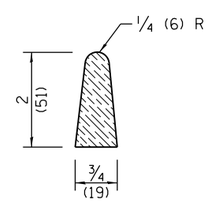


**DETAIL A**

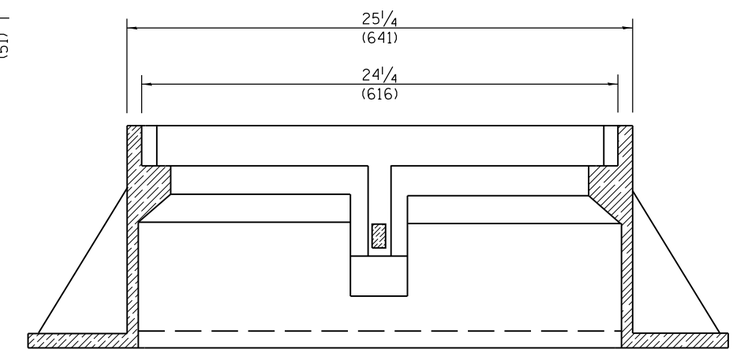


**SECTION D–D**

All dimensions are in inches (millimeters) unless otherwise shown.

Illinois Department of Transportation

PASSED January 1, 2015
Michael Brand
ENGINEER OF POLICY AND PROCEDURES
APPROVED January 1, 2015
ENGINEER OF DESIGN AND ENVIRONMENT

ISSUED 1-1-97

| DATE | REVISIONS |
|---|---|
| 1-1-15 | Revised dimensions of frame. |
| 1-1-09 | Switched units to English (metric). |

# FRAME AND GRATE TYPE 24

**STANDARD 604091–03**

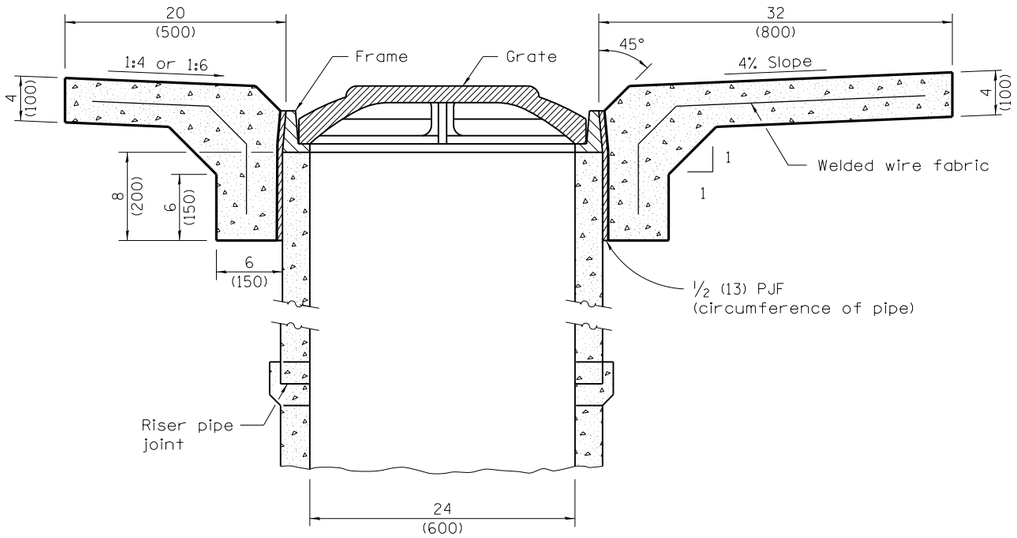


## SECTION B–B

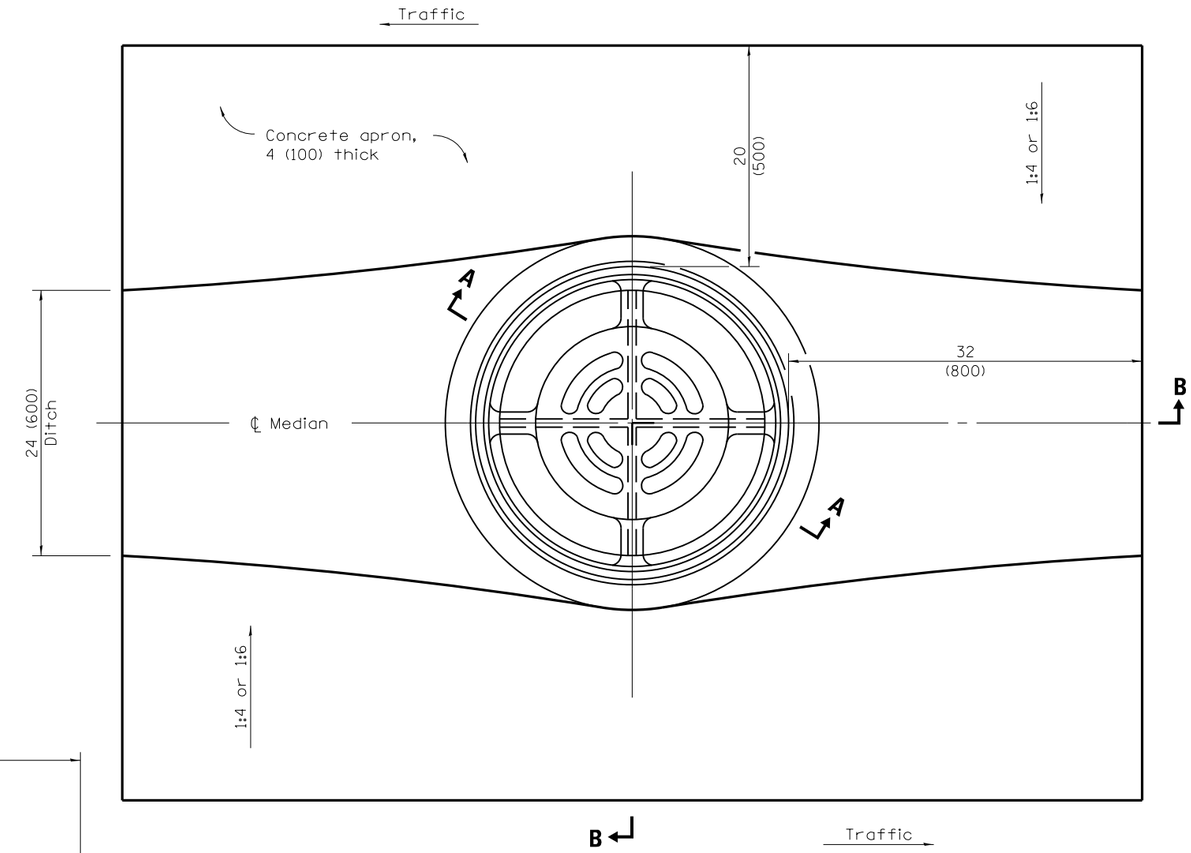


## LOCATION SKETCH – PLAN

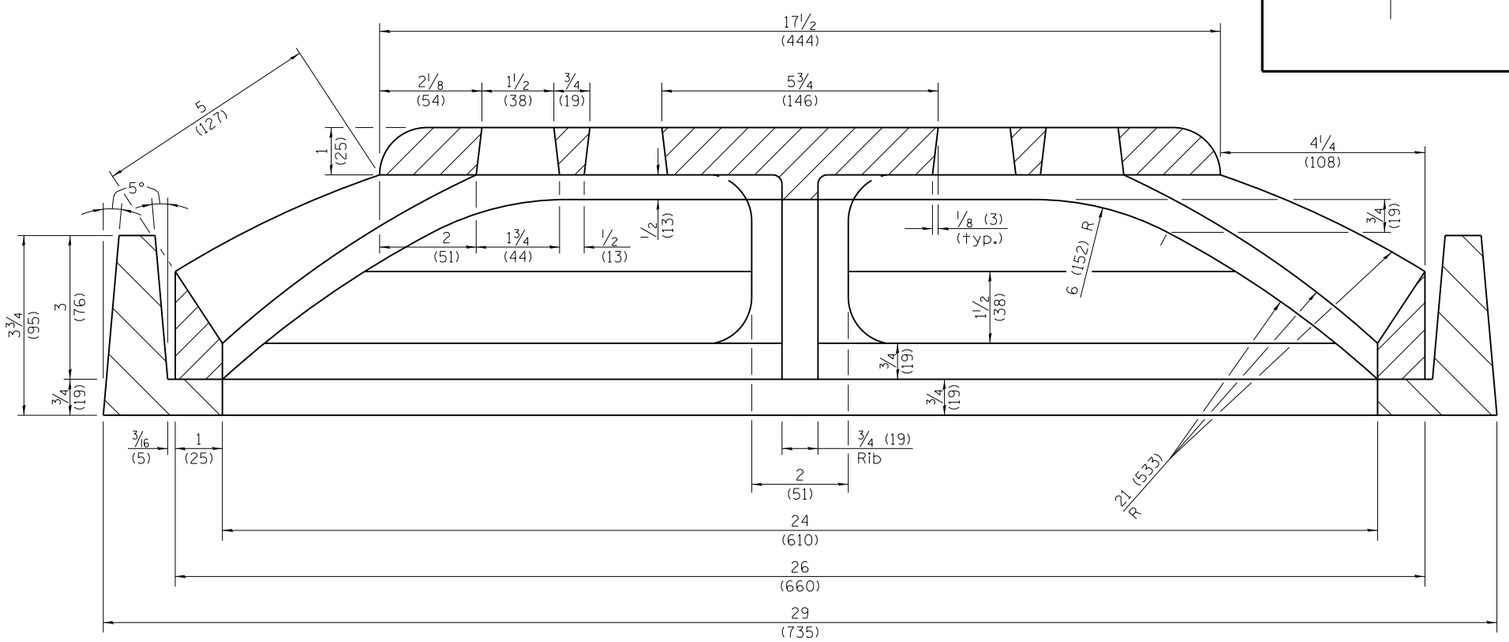


## SECTION A–A

## GENERAL NOTES

All slope ratios are expressed as units of vertical displacement to units of horizontal displacement (V:H).

All dimensions are in inches (millimeters) unless otherwise shown.

Illinois Department of Transportation

PASSED January 1, 2009
ENGINEER OF POLICY AND PROCEDURES
APPROVED January 1, 2009
ENGINEER OF DESIGN AND ENVIRONMENT

ISSUED 1-1-97

| DATE | REVISIONS |
|---|---|
| 1-1-09 | Switched units to English (metric). |
| 1-1-97 | Renum. Standard 2250-3. |

# MEDIAN INLET for 24" (600 mm) REINFORCED CONCRETE PIPE

STANDARD 604101–01

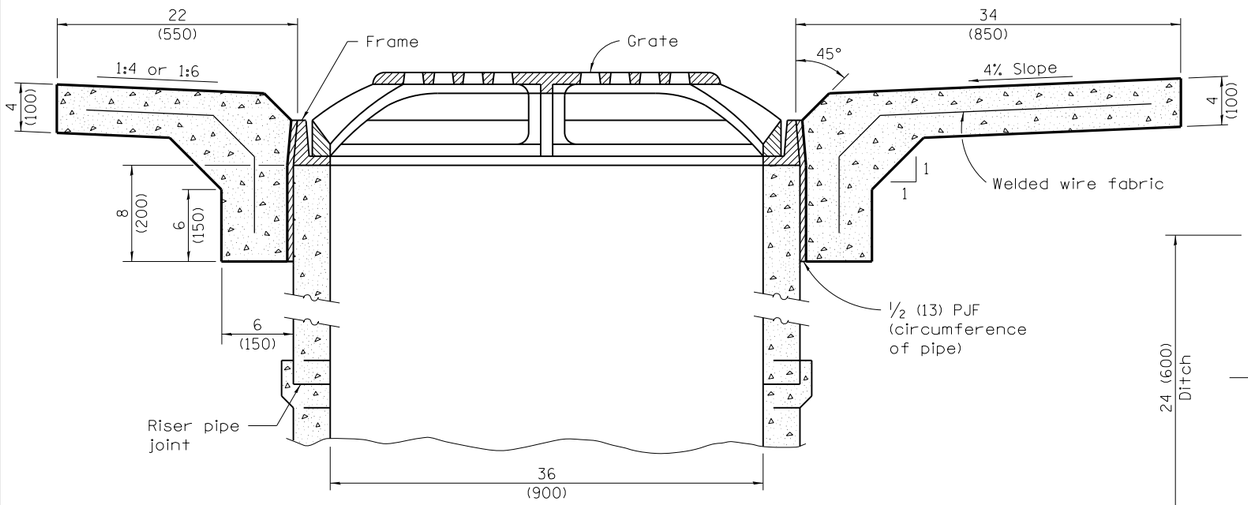


**SECTION B–B**

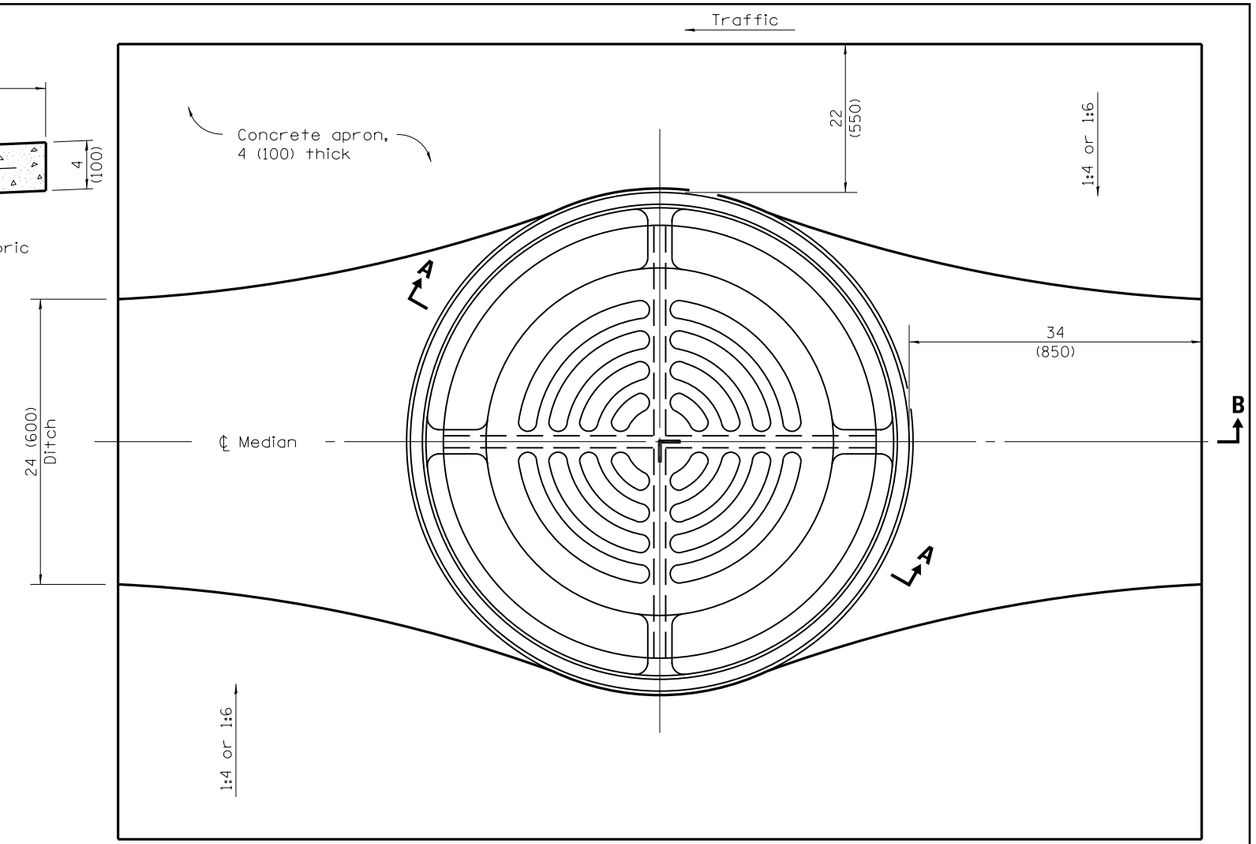


**LOCATION SKETCH – PLAN**

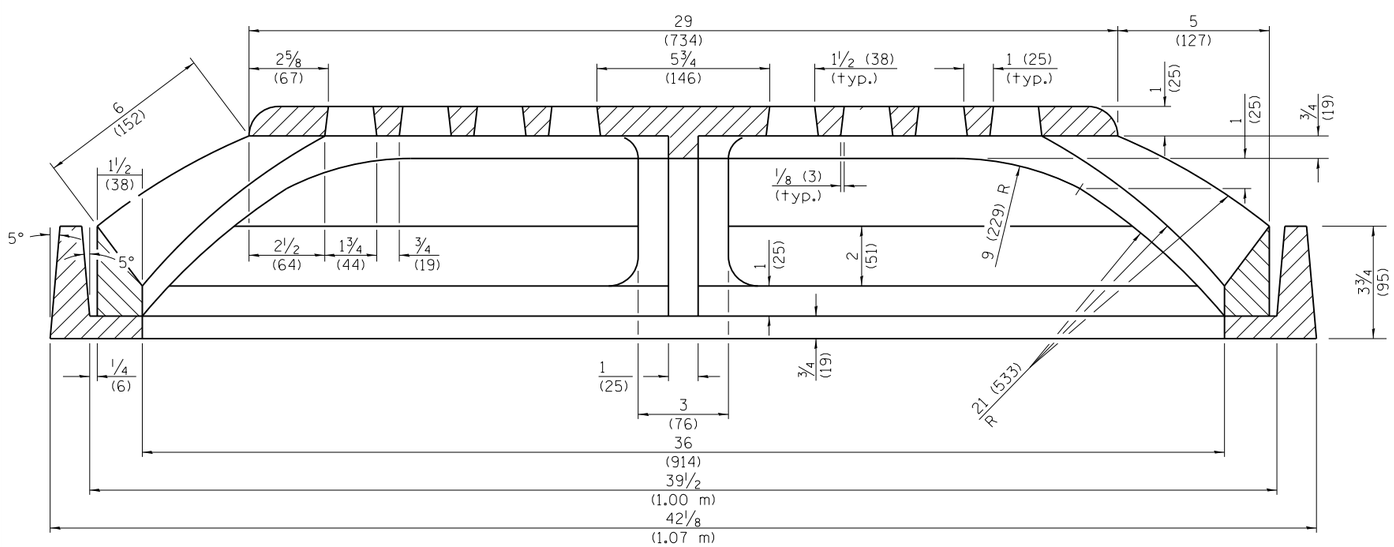


**SECTION A–A**

## GENERAL NOTES

All slope ratios are expressed as units of vertical displacement to units of horizontal displacement (V:H).

All dimensions are in inches (millimeters) unless otherwise shown.

Illinois Department of Transportation

PASSED January 1, 2009
ENGINEER OF POLICY AND PROCEDURES
APPROVED January 1, 2009
ENGINEER OF DESIGN AND ENVIRONMENT

ISSUED 1-1-97

| DATE | REVISIONS |
|---|---|
| 1-1-09 | Switched units to English (metric). |
| 1-1-97 | Renum. Standard 2251-2. |

# MEDIAN INLET for 36" (900 mm) REINFORCED CONCRETE PIPE

**STANDARD 604106–01**

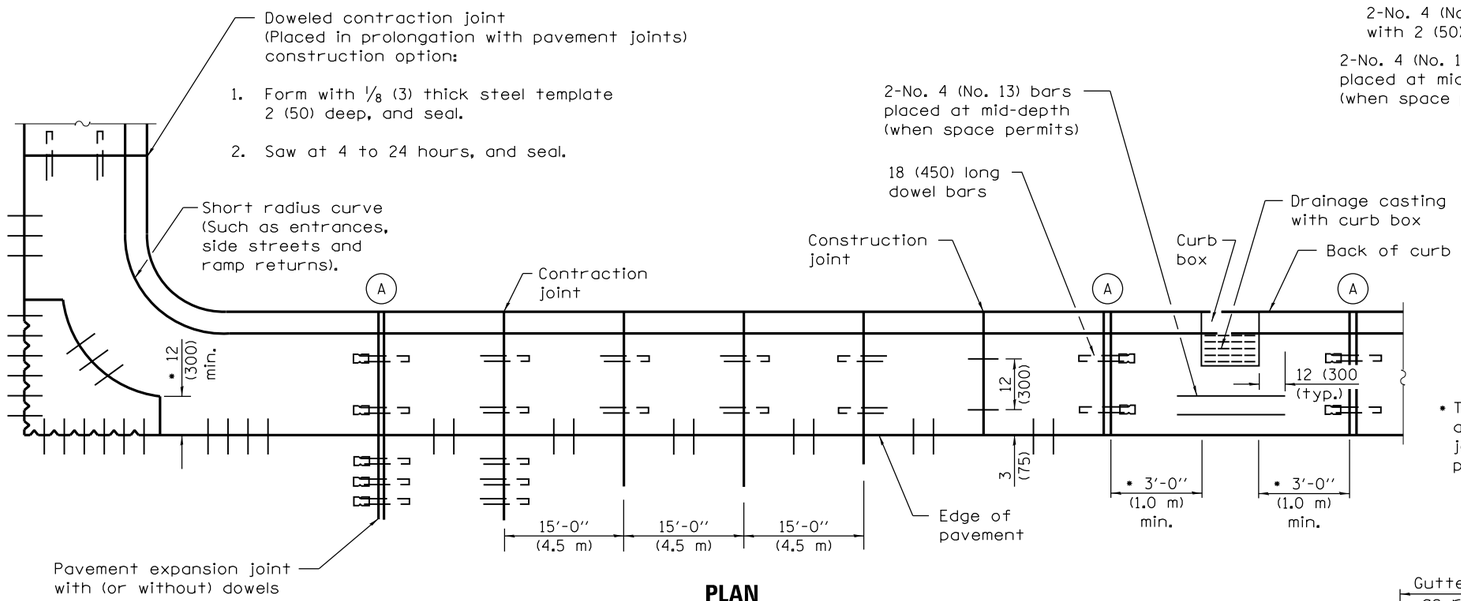


## PLAN
## ADJACENT TO PCC PAVEMENT OR PCC BASE COURSE

• This dimension shall be adjusted to align with joint on the adjacent pavement

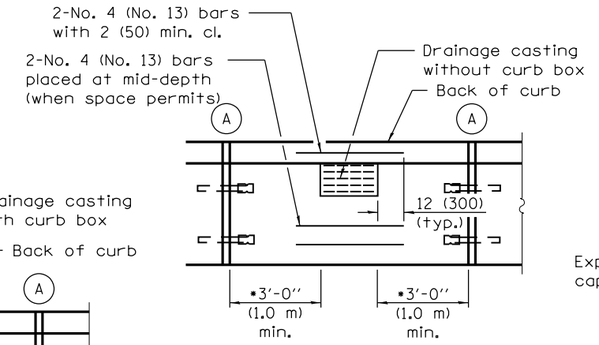


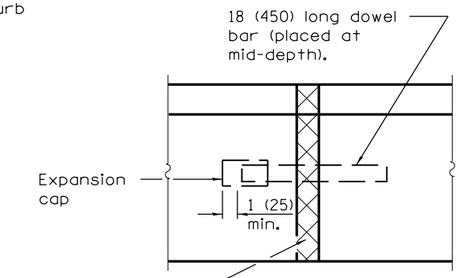


## DETAIL (A)
## EXPANSION JOINT

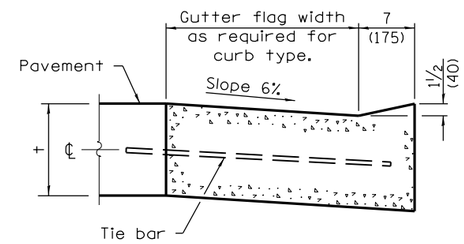


## DEPRESSED CURB (TYPICAL)

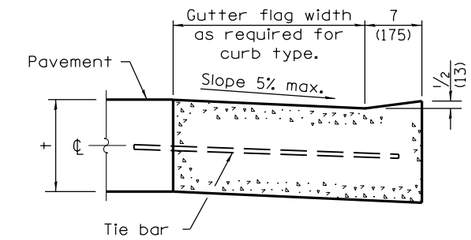


## DEPRESSED CURB ADJACENT TO CURB RAMP ACCESSIBLE TO THE DISABLED

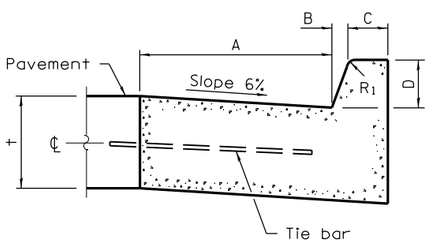


## BARRIER CURB

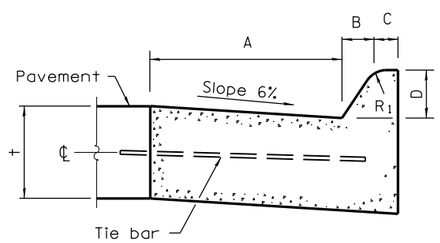


## MOUNTABLE CURB

| TABLE OF DIMENSIONS BARRIER CURB | | | | | |
|---|---|---|---|---|---|
| TYPE | A | B | C | D | $R_1$ |
| B-6.06 * (B-15.15) | 6 (150) | 1 (25) | 6 (150) | 6 (150) | 1 (25) |
| B-6.12 (B-15.3) | 12 (300) | 1 (25) | 6 (150) | 6 (150) | 1 (25) |
| B-6.18 (B-15.45) | 18 (450) | 1 (25) | 6 (150) | 6 (150) | 1 (25) |
| B-6.24 (B-15.60) | 24 (600) | 1 (25) | 6 (150) | 6 (150) | 1 (25) |
| B-9.12 (B-22.30) | 12 (300) | 2 (50) | 5 (125) | 9 (225) | 1 (25) |
| B-9.18 (B-22.45) | 18 (450) | 2 (50) | 5 (125) | 9 (225) | 1 (25) |
| B-9.24 (B-22.60) | 24 (600) | 2 (50) | 5 (125) | 9 (225) | 1 (25) |

* For corner islands only.

| TABLE OF DIMENSIONS MOUNTABLE CURB | | | | | | |
|---|---|---|---|---|---|---|
| TYPE | A | B | C | D | $R_1$ | $R_2$ |
| M-2.06 (M-5.15) | 6 (150) | 2 (50) | 4 (100) | 2 (50) | 3 (75) | 2 (50) |
| M-2.12 (M-5.30) | 12 (300) | 2 (50) | 4 (100) | 2 (50) | 3 (75) | 2 (50) |
| M-4.06 (M-10.15) | 6 (150) | 4 (100) | 3 (75) | 4 (100) | 3 (75) | NA |
| M-4.12 (M-10.30) | 12 (300) | 4 (100) | 3 (75) | 4 (100) | 3 (75) | NA |
| M-4.18 (M-10.45) | 18 (450) | 4 (100) | 3 (75) | 4 (100) | 3 (75) | NA |
| M-4.24 (M-10.60) | 24 (600) | 4 (100) | 3 (75) | 4 (100) | 3 (75) | NA |
| M-6.06 (M-15.15) | 6 (150) | 6 (150) | 2 (50) | 6 (150) | 2 (50) | NA |
| M-6.12 (M-15.30) | 12 (300) | 6 (150) | 2 (50) | 6 (150) | 2 (50) | NA |
| M-6.18 (M-15.45) | 18 (450) | 6 (150) | 2 (50) | 6 (150) | 2 (50) | NA |
| M-6.24 (M-15.60) | 24 (600) | 6 (150) | 2 (50) | 6 (150) | 2 (50) | NA |

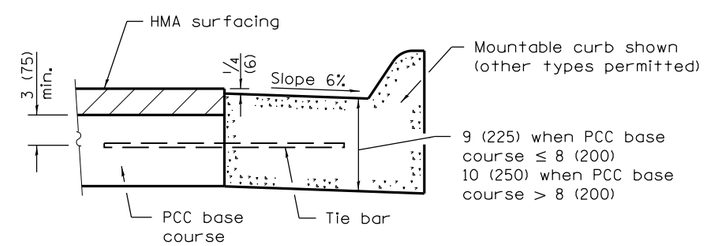


## ADJACENT TO PCC BASE COURSE WITH HMA SURFACING

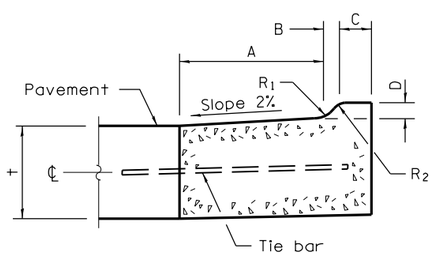


## M–2.06 (M–5.15) and M–2.12 (M–5.30)

## GENERAL NOTES

The bottom slope of combination curb and gutter constructed adjacent to pcc pavement shall be the same slope as the subbase or 6% when subbase is omitted.

t = Thickness of pavement.

Longitudinal joint tie bars shall be No. 6 (No. 19) at 24 (600) centers in accordance with details for longitudinal construction joint shown on Standard 420001.

A minimum clearance of 2 (50) between the end of the tie bar and the back of the curb shall be maintained.

The dowel bars shown in contraction joints will only be required for monolithic construction.

See Standard 606301 for details of corner islands.

All dimensions are in inches (millimeters) unless otherwise shown.

Illinois Department of Transportation

PASSED January 1, 2015
Michael Brand
ENGINEER OF POLICY AND PROCEDURES
APPROVED January 1, 2015
ENGINEER OF DESIGN AND ENVIRONMENT

ISSUED 1-1-97

| DATE | REVISIONS |
|---|---|
| 1-1-15 | Added B-6.06 (B-15.15) barrier |
| | curb and gutter to table |
| | (corner islands only). |
| 1-1-13 | Added general note |
| | regarding requirement |
| | for dowel bars. |

# CONCRETE CURB TYPE B AND COMBINATION CONCRETE CURB AND GUTTER

(Sheet 1 of 2)

STANDARD 606001–06

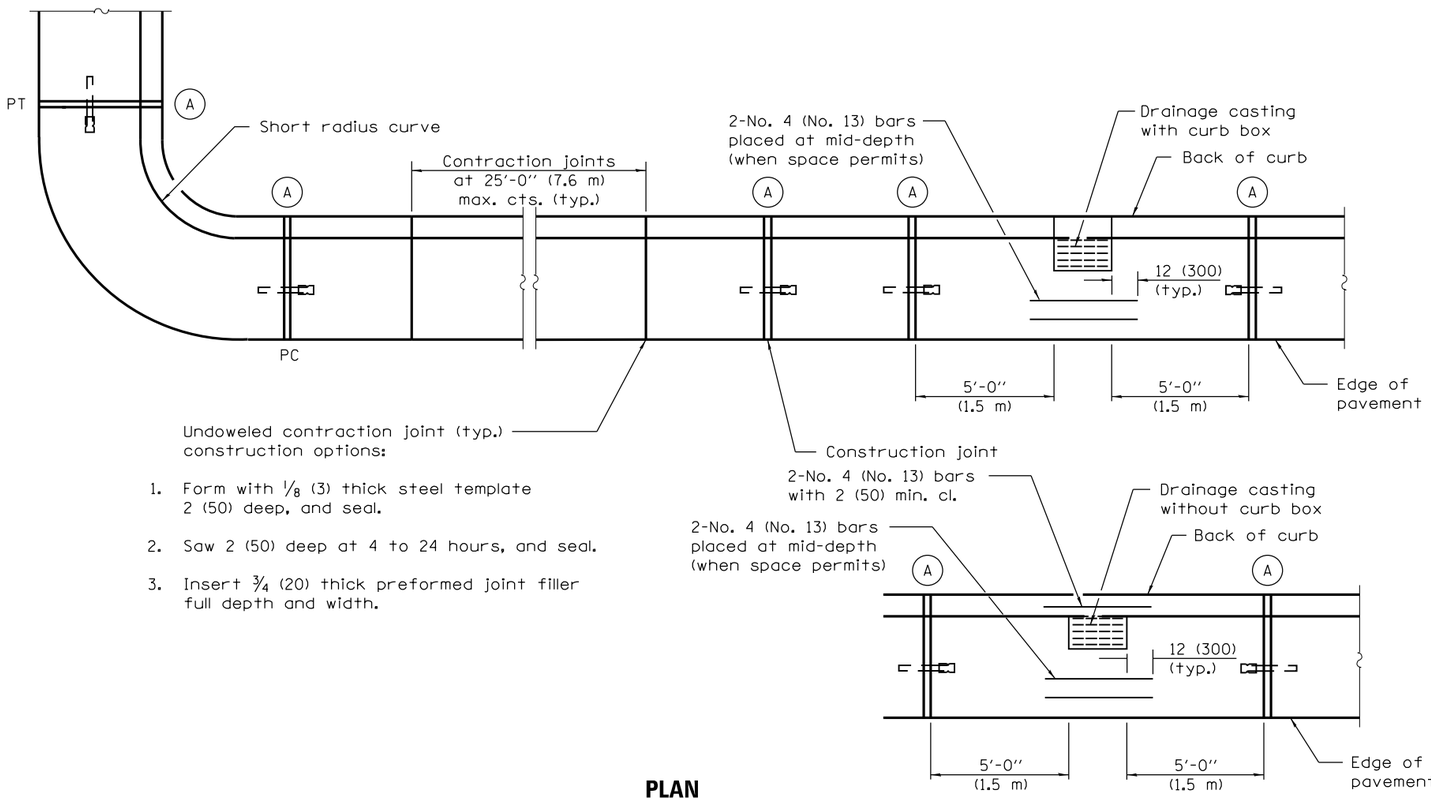


**PLAN**

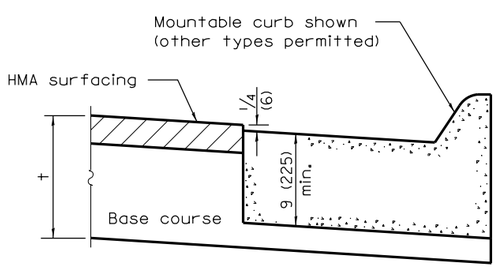


**ON DISTURBED SUBGRADE**

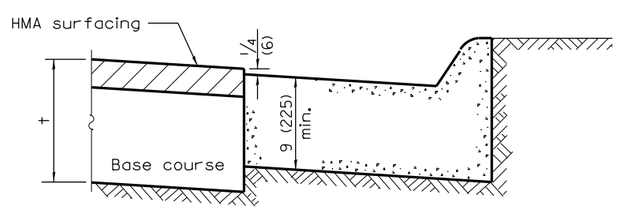


**ON UNDISTURBED SUBGRADE**

**ADJACENT TO FLEXIBLE PAVEMENT**

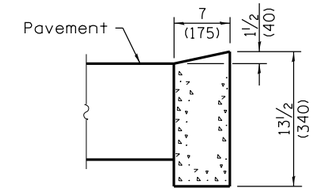


**DEPRESSED CURB**

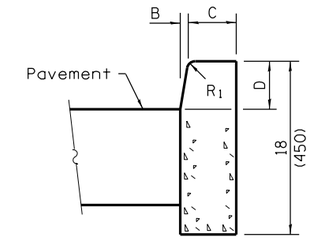


**BARRIER CURB**

**ADJACENT TO FLEXIBLE PAVEMENT**

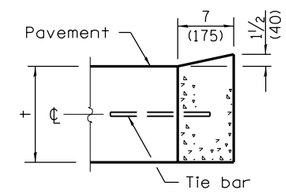


**DEPRESSED CURB**

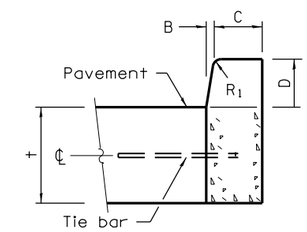


**BARRIER CURB**

**ADJACENT TO PCC PAVEMENT OR PCC BASE COURSE**

**CONCRETE CURB TYPE B**

Illinois Department of Transportation

PASSED January 1, 2015

Michael Brand

ENGINEER OF POLICY AND PROCEDURES

APPROVED January 1, 2015

ENGINEER OF DESIGN AND ENVIRONMENT

ISSUED 1-1-97

# CONCRETE CURB TYPE B AND COMBINATION CONCRETE CURB AND GUTTER

(Sheet 2 of 2)

**STANDARD 606001–06**

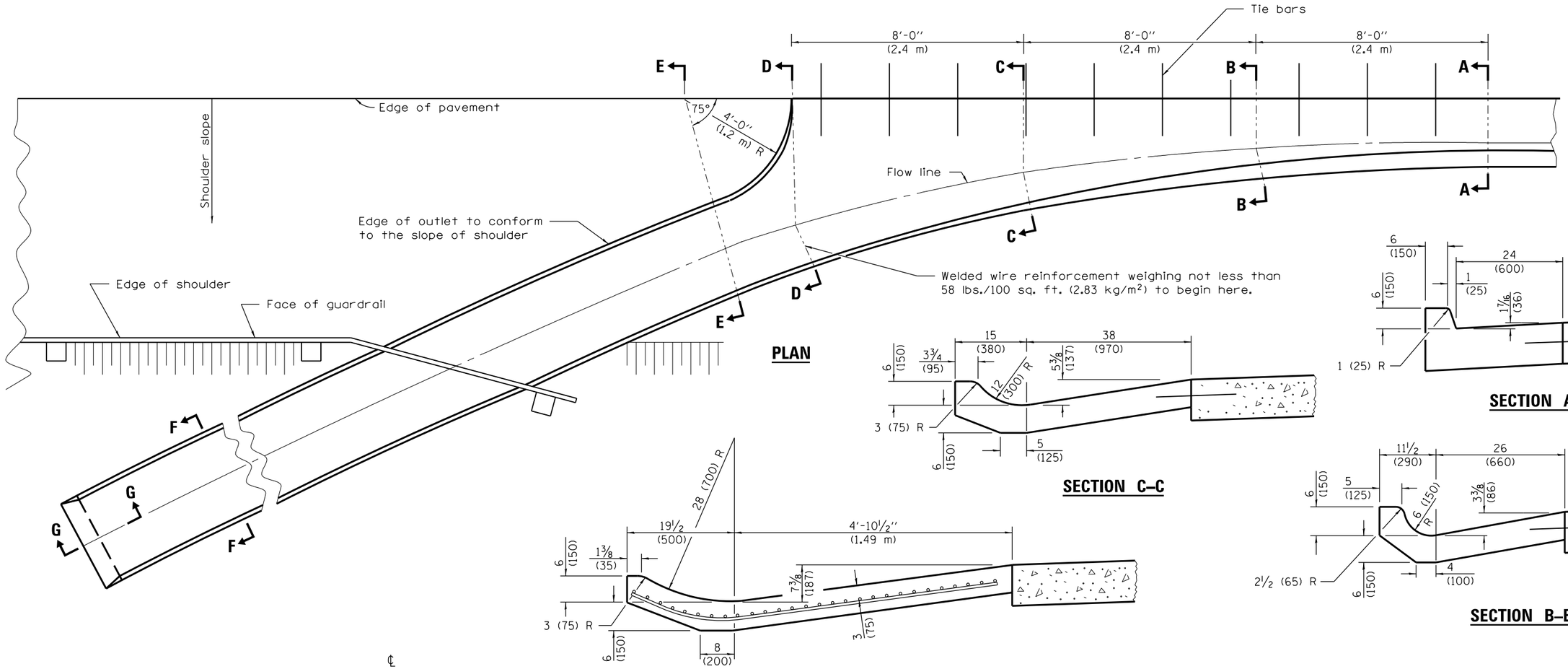


## GENERAL NOTES

Tie bars shall be No. 6 (No. 19) at 24 (600) centers unless otherwise shown.

Gutter outlet shall be tied to the pavement in accordance with details for longitudinal construction joint shown on Standard 420001.

If the average grade of pavement for the distance from Section A-A to D-D exceeds 2%, this distance shall be increased 6' (1.8 m) for each 1% increase in grade.

All dimensions are in inches (millimeters) unless otherwise shown.

## QUANTITIES

For Section A-A to E-E and curtain wall =

2.38 cu. yds. (1.82 m³) concrete for 9 (225) pav't.
2.41 cu. yds. (1.84 m³) concrete for 10 (250) pav't.

For Section F-F =

0.069 cu. yds. (0.17 m³) concrete per ft. (m)

**STANDARD OUTLET**

Illinois Department of Transportation

PASSED April 1, 2016
Michael Brand
ENGINEER OF POLICY AND PROCEDURES
APPROVED April 1, 2016
ENGINEER OF DESIGN AND ENVIRONMENT

ISSUED 1-1-97

| DATE | REVISIONS |
|---|---|
| 4-1-16 | Changed terminology to |
| | 'welded wire reinforcement'. |
| | |
| 1-1-09 | Switched units to |
| | English (metric). |
| | |

# OUTLETS FOR CONCRETE CURB AND GUTTER TYPE B–6.24 (B–15.60)

(Sheet 1 of 2)

**STANDARD 606006–03**

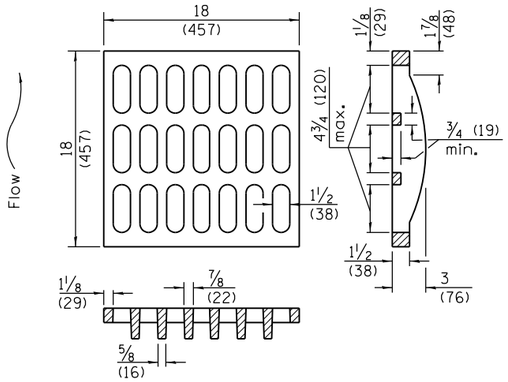


**GRATE TYPE A**

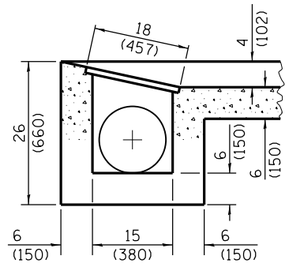


**SECTION E–E**

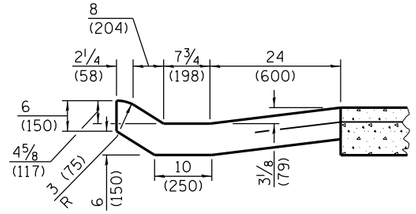


**SECTION C–C**

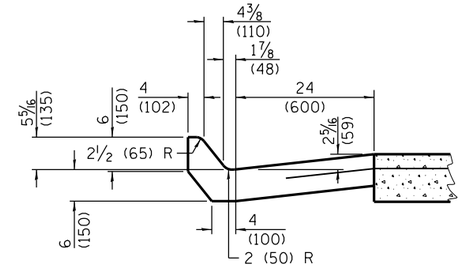


**SECTION B–B**

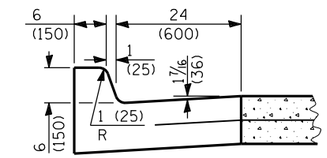


**SECTION A–A**

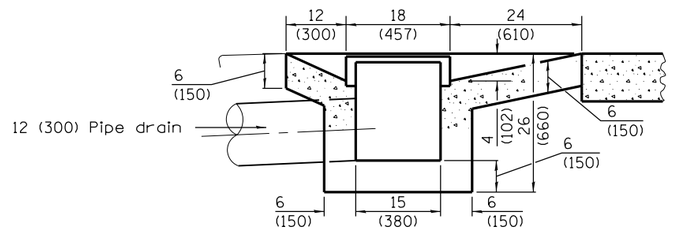


**SECTION D–D**

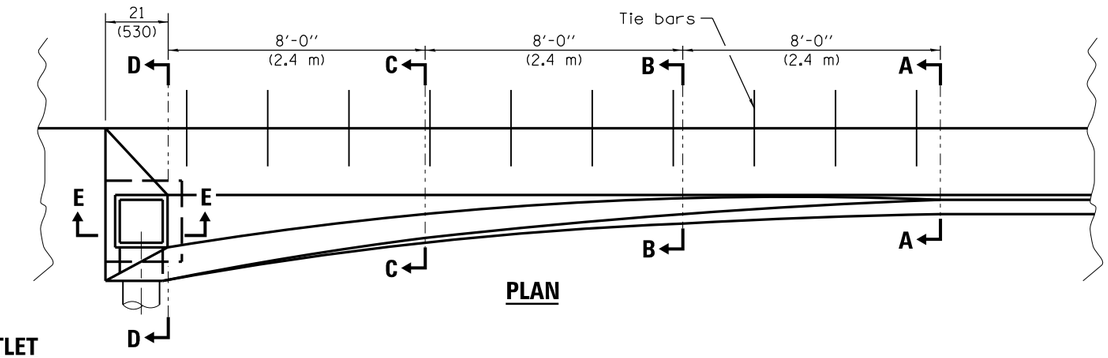


**PLAN**

**TYPE 1 OUTLET**

**QUANTITIES**

1.98 cu. yds. (1.51 m³) concrete for 9 (225) pav't.

2.01 cu. yds. (1.54 m³) concrete for 10 (250) pav't.

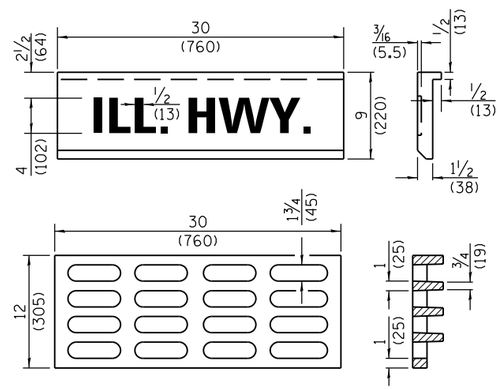


**GRATE AND COVER TYPE 2B**

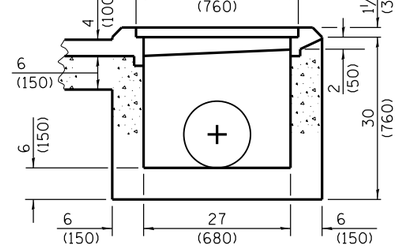


**SECTION F–F**

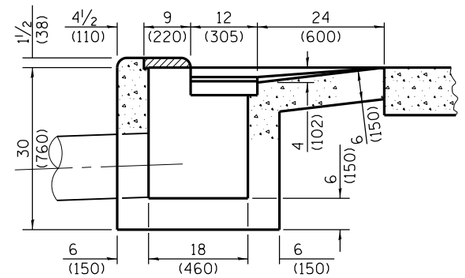


**SECTION D–D**

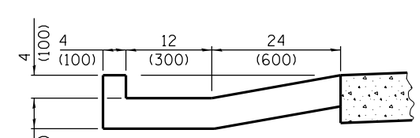


**SECTION E–E**

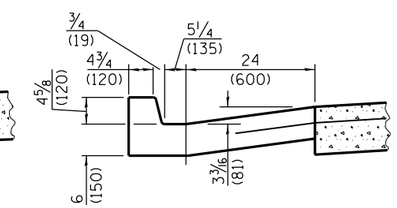


**SECTION C–C**

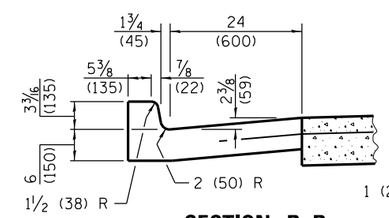


**SECTION B–B**

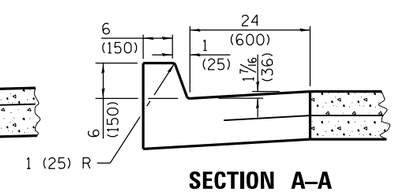


**SECTION A–A**

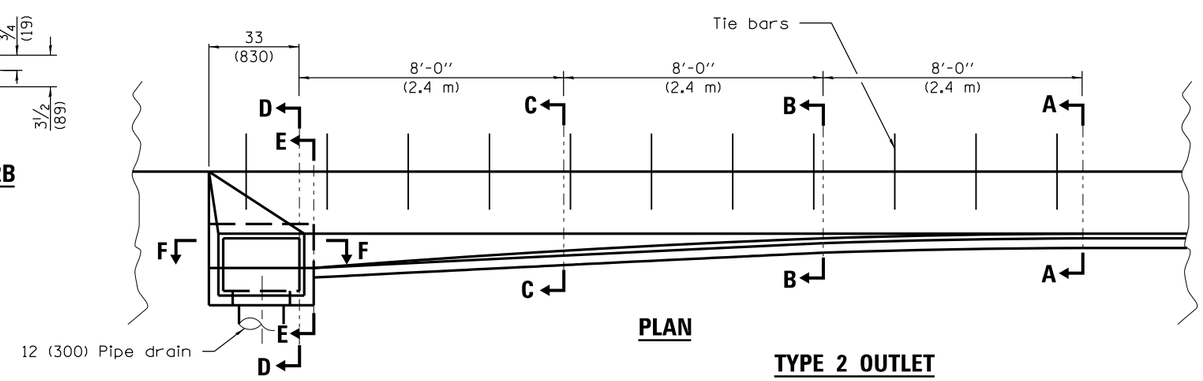


**PLAN**

**TYPE 2 OUTLET**

**QUANTITIES**

2.07 cu. yds. (1.58 m³) concrete for 9 (225) pav't.

2.07 cu. yds. (1.60 m³) concrete for 10 (250) pav't.

All dimensions are in inches (millimeters) unless otherwise shown.

Illinois Department of Transportation

PASSED April 1, 2016

Michael Brand
ENGINEER OF POLICY AND PROCEDURES

APPROVED April 1, 2016

ENGINEER OF DESIGN AND ENVIRONMENT

ISSUED 1-1-97

# OUTLETS FOR CONCRETE CURB AND GUTTER TYPE B–6.24 (B–15.60)

(Sheet 2 of 2)

**STANDARD 606006–03**

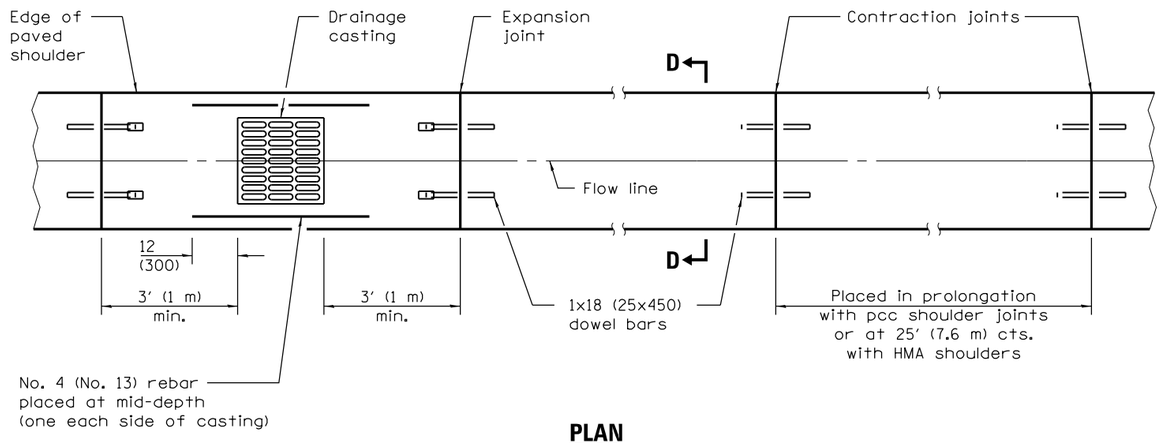


**PLAN**

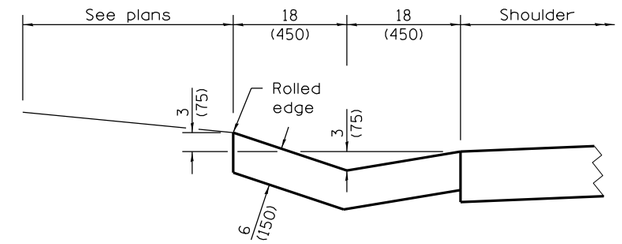


**SECTION D–D**

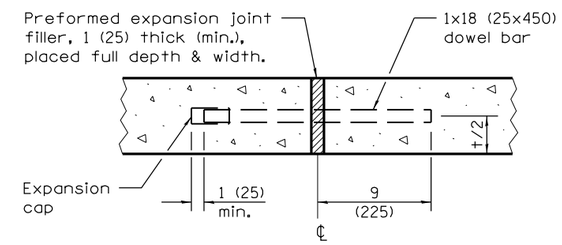


**EXPANSION JOINT**

**TYPE A GUTTER**

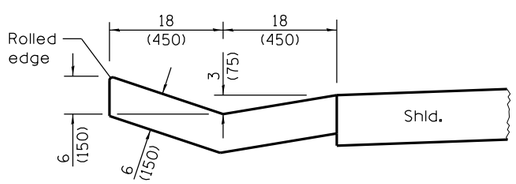


**SECTION A–A**

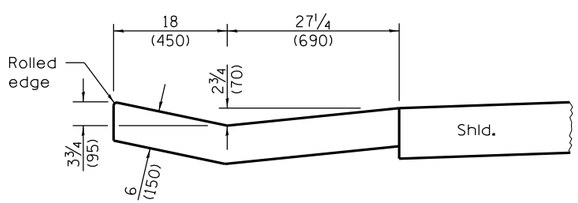


**SECTION B–B**

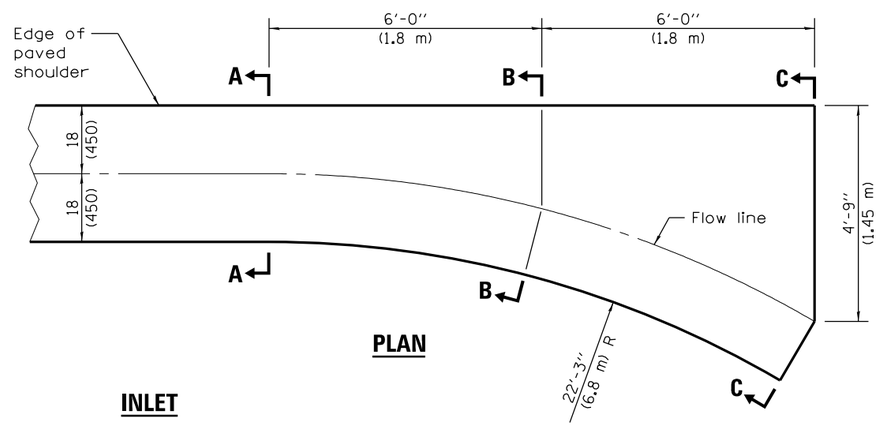


**PLAN**

**INLET**

QUANTITY OF CONCRETE
Section A-A to C-C
0.93 cu. yd. (0.71 m³)

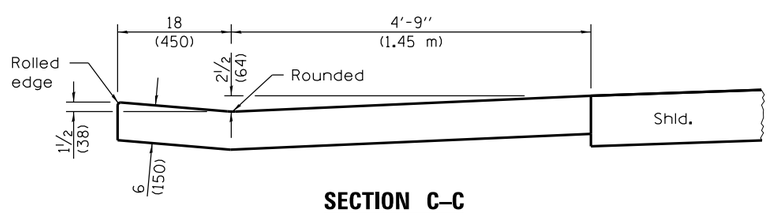


**SECTION C–C**

All dimensions are in inches (millimeters) unless otherwise shown.

Illinois Department of Transportation

PASSED April 1, 2016
Michael Brand
ENGINEER OF POLICY AND PROCEDURES
APPROVED April 1, 2016
ENGINEER OF DESIGN AND ENVIRONMENT

ISSUED 1-1-97

| DATE | REVISIONS |
|---|---|
| 4-1-16 | Changed terminology to |
| | 'welded wire reinforcement'. |
| | |
| 1-1-09 | Switched units to |
| | English (metric). Changed |
| | radii, adjusted qty's. |

# TYPE A GUTTER (INLET, OUTLET & ENTRANCE)

(Sheet 1 of 3)

**STANDARD 606101–05**

QUANTITIES OF CONCRETE

Commercial Entrances:
Section B-B to C-C = 0.25 cu. yd./ft. (0.62 $m^3/m$).
Section (A-A to B-B) + (C-C to D-D) = 2.26 cu. yd. (1.73 $m^3$).

All Other Entrances:
Section B-B to C-C = 0.20 cu. yd./ft. (0.50 $m^3/m$).
Section (A-A to B-B) + (C-C to D-D) = 1.79 cu. yd. (1.37 $m^3$).

NOTE:
Welded wire reinforcement shall be installed at mid-depth from Section A-A to D-D.
(58 lbs./100 sq. ft. (2.83 $kg/m^2$))

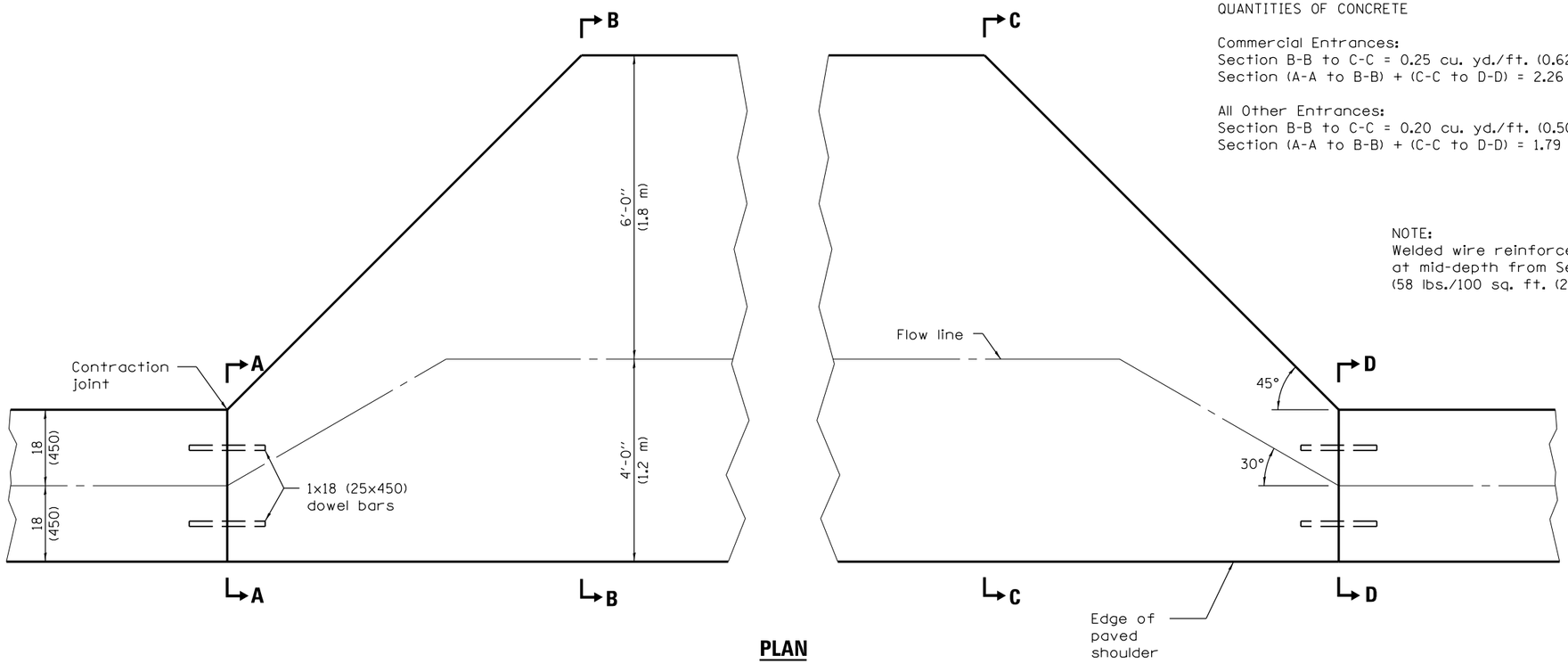


**PLAN**

**ENTRANCE**

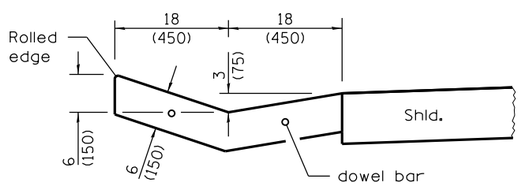


**SECTIONS A–A & D–D**

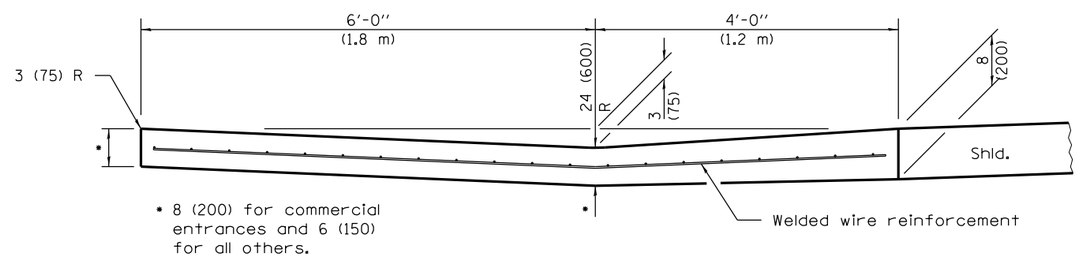


**SECTIONS B–B & C–C**

Illinois Department of Transportation

PASSED April 1, 2016
Michael Brand
ENGINEER OF POLICY AND PROCEDURES
APPROVED April 1, 2016
ENGINEER OF DESIGN AND ENVIRONMENT

ISSUED 1-1-97

# TYPE A GUTTER (INLET, OUTLET & ENTRANCE)

(Sheet 2 of 3)

**STANDARD 606101–05**

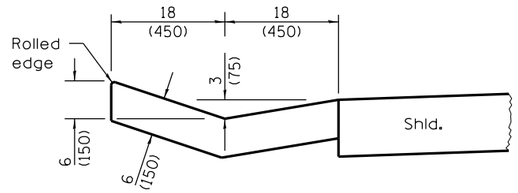


**SECTION A–A**

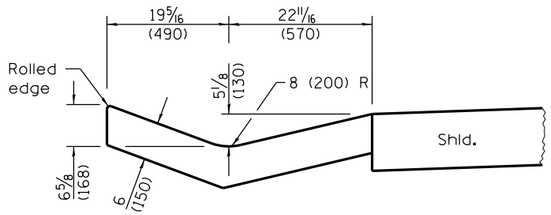


**SECTION B–B**

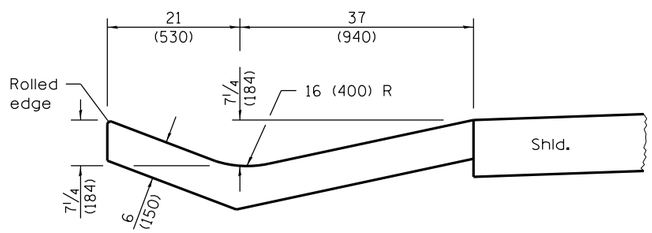


**SECTION C–C**

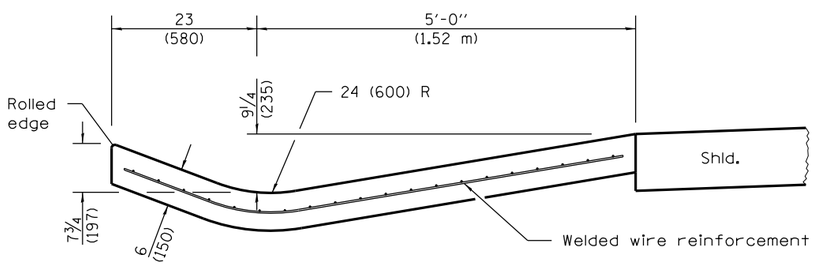


**SECTION D–D**

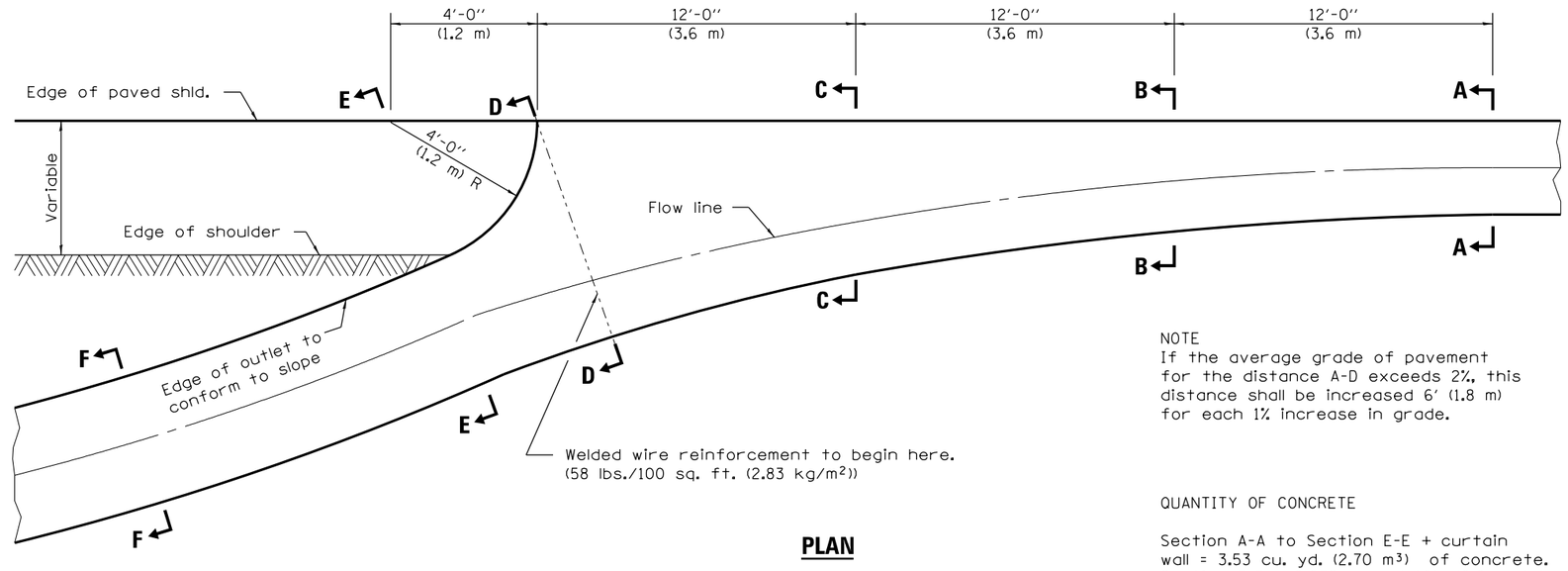


**PLAN**

**OUTLET**

NOTE
If the average grade of pavement for the distance A-D exceeds 2%, this distance shall be increased 6' (1.8 m) for each 1% increase in grade.

QUANTITY OF CONCRETE

Section A-A to Section E-E + curtain wall = 3.53 cu. yd. (2.70 m³) of concrete.
Section F-F = 0.079 cu. yd./ft. (0.2 m³/m).

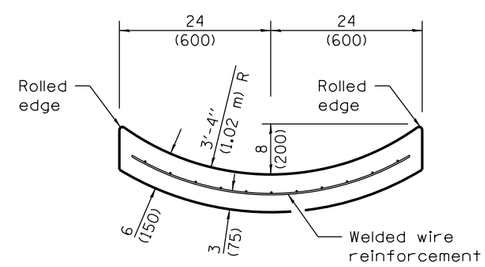


**SECTION F–F**

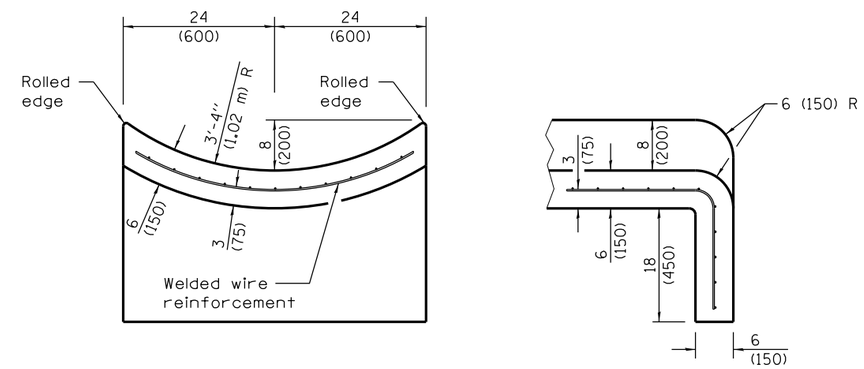


**SECTIONS AT END OF OUTLET**

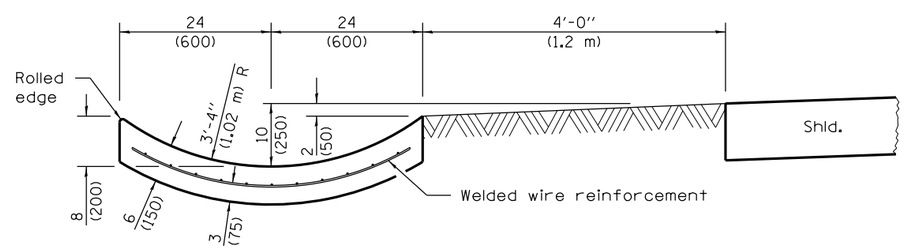


**SECTION E–E**

Illinois Department of Transportation

PASSED April 1, 2016
Michael Brand
ENGINEER OF POLICY AND PROCEDURES
APPROVED April 1, 2016
ENGINEER OF DESIGN AND ENVIRONMENT

ISSUED 1-1-97

# TYPE A GUTTER (INLET, OUTLET & ENTRANCE)

(Sheet 3 of 3)

**STANDARD 606101–05**

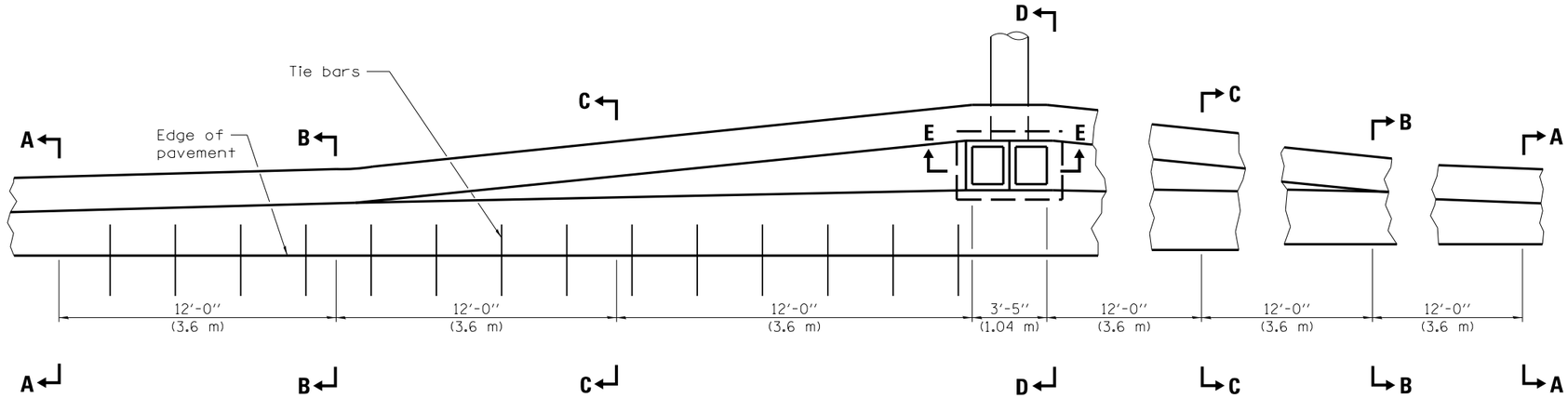


## PLAN–DOUBLE OUTLET

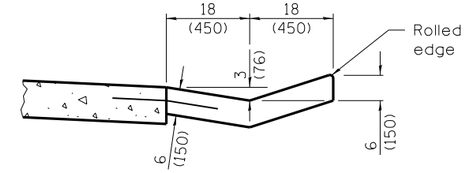


## SECTION A–A

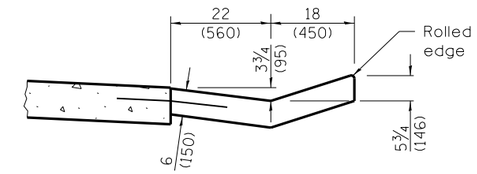


## SECTION B–B

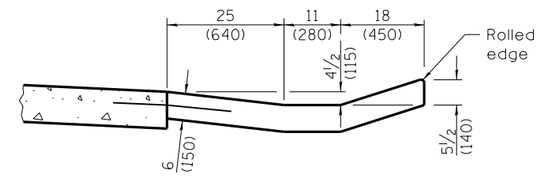


## SECTION C–C

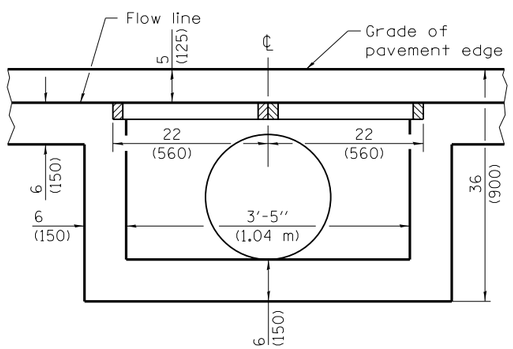


## SECTION E–E

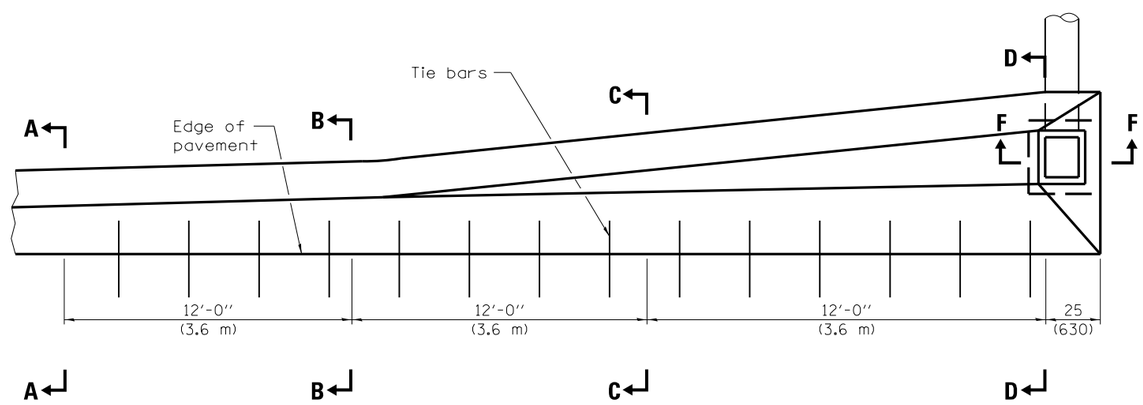


## PLAN–SINGLE OUTLET

## QUANTITIES

| Material | Single | Double |
|---|---|---|
| Concrete - cu. yd. ($m^3$) | 3.3 (2.5) | 6.5 (5) |
| Cast Iron Grate - Ea. | 1 | 2 |
| Pipe Drain - Dia. in. (mm) | 15 (375) | 18 (450) |

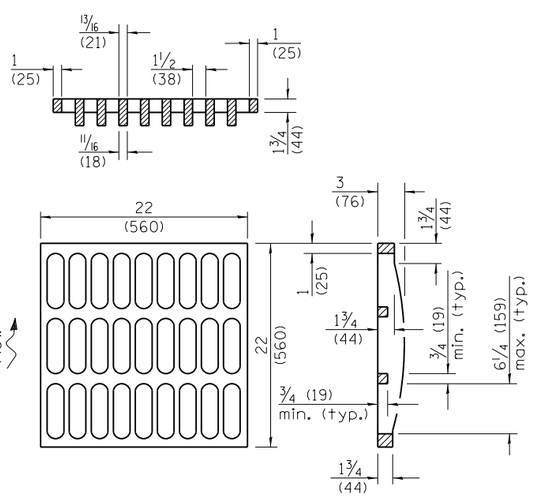


## GRATE TYPE A

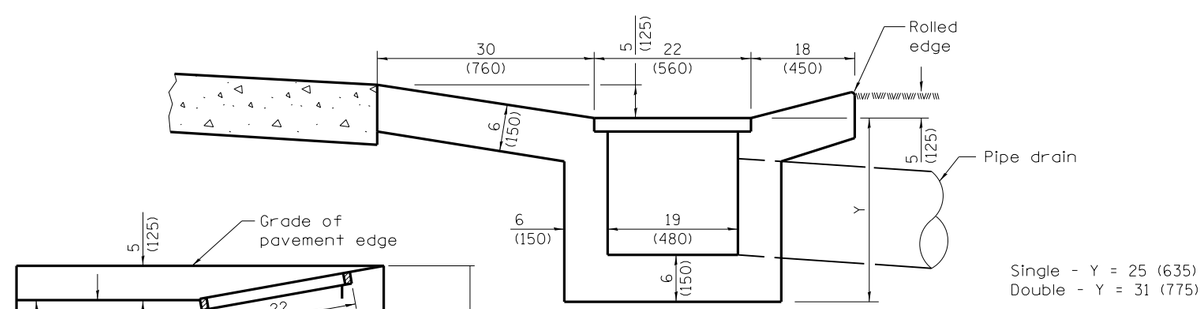


Single - Y = 25 (635)
Double - Y = 31 (775)

## SECTION D–D

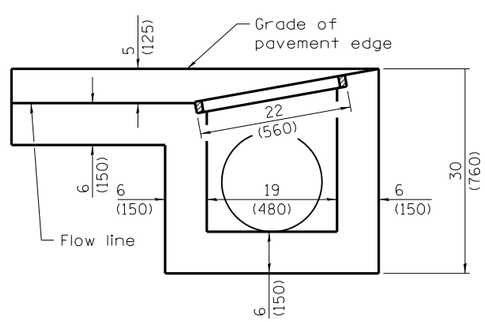


## SECTION F–F

## GENERAL NOTES

The gutter outlet shall be tied to the pavement in accordance with details for longitudinal construction joint shown on Standard 420001.

Tie bars shall be No. 6 (No. 19) at 24 (600) centers unless otherwise shown.

If the average grade of pavement for the distance A-D exceeds 2%, this distance shall be increased 6' (1.8 m) for each 1% increase in grade.

All dimensions are in inches (millimeters) unless otherwise shown.

Illinois Department of Transportation

PASSED January 1, 2009
ENGINEER OF POLICY AND PROCEDURES
APPROVED January 1, 2009
ENGINEER OF DESIGN AND ENVIRONMENT

ISSUED 1-1-97

| DATE | REVISIONS |
|---|---|
| 1-1-09 | Switched units to |
| | English (metric). |
| | |
| 1-1-07 | Soft converted metric |
| | rebars. Rem. weight |
| | of grate. |

# OUTLET TYPE 1 FOR TYPE A GUTTER

STANDARD 606106–04

NOTE
If the average grade of pavement for the distance A-E exceeds 2%, this distance shall be increased 6 ft. (1.8 m) for each 1% increase in grade.

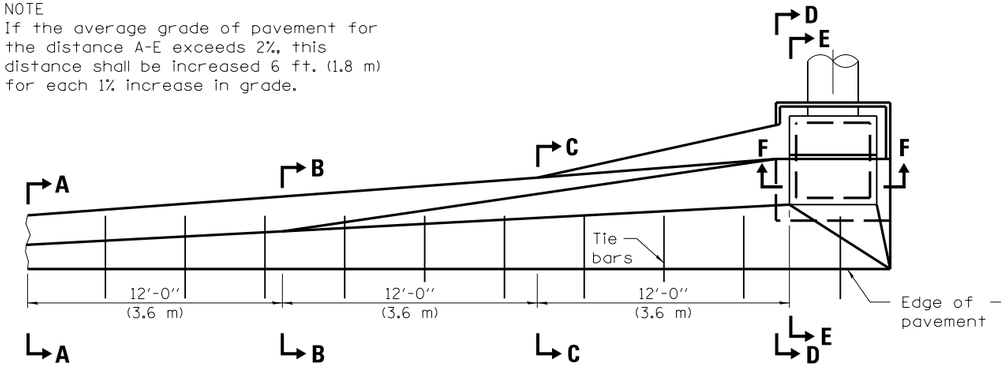


## PLAN – SINGLE OUTLET

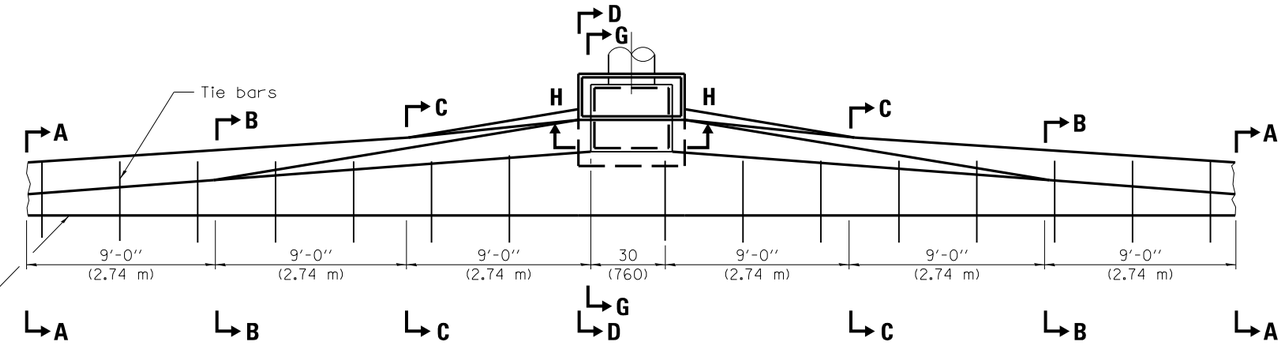


## PLAN – DOUBLE OUTLET

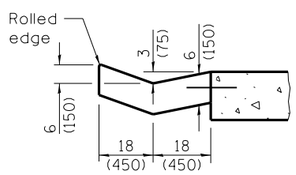


## SECTION A–A

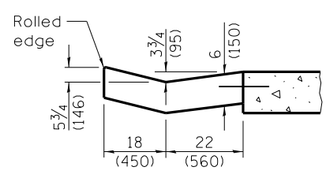


## SECTION B–B

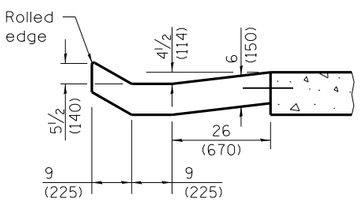


## SECTION C–C

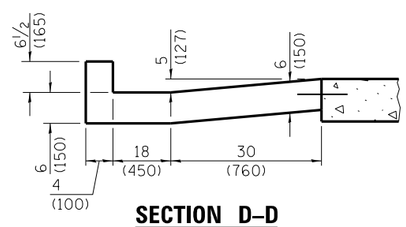


## SECTION D–D

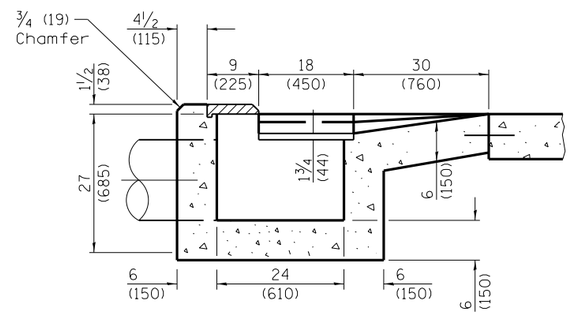


## SECTION E–E

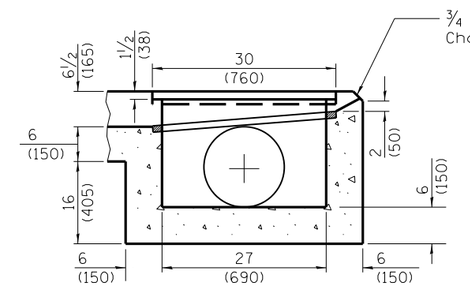


## SECTION F–F

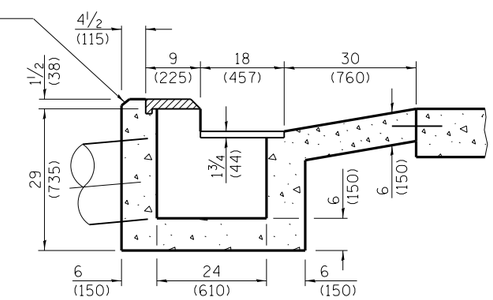


## SECTION G–G

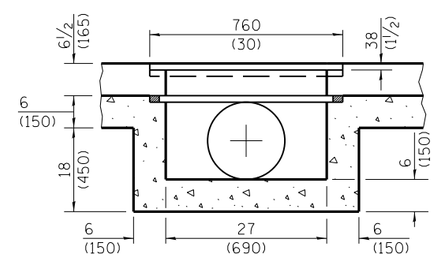


## SECTION H–H

## QUANTITIES

| Material | Single | Double |
|---|---|---|
| Concrete - cu. yd. ($m^3$) | 3.07 (2.35) | 4.33 (3.31) |
| Cast Iron Grate - Ea. | 1 | 1 |
| Cast Iron Cover - Ea. | 1 | 1 |
| Pipe Drain - Dia. in. (mm) | 15 (375) | 18 (450) |

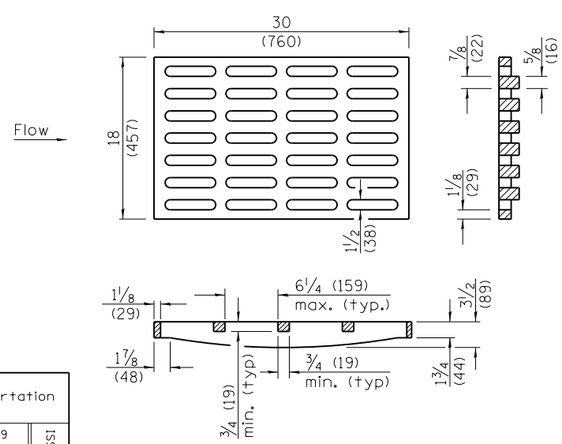


## GRATE AND COVER TYPE 2A

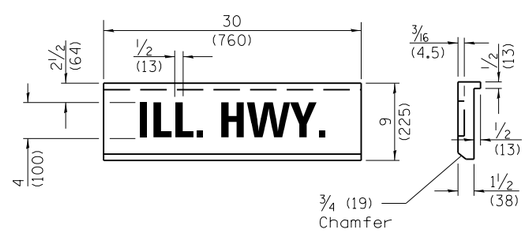


## GENERAL NOTES

The gutter outlet shall be tied to the pavement in accordance with details for longitudinal construction joint shown on Standard 420001.

All dimensions are in inches (millimeters) unless otherwise shown.

Illinois Department of Transportation

PASSED January 1, 2009
ENGINEER OF POLICY AND PROCEDURES

APPROVED January 1, 2009
ENGINEER OF DESIGN AND ENVIRONMENT

ISSUED 1-1-97

| DATE | REVISIONS |
|---|---|
| 1-1-09 | Switched units to |
| | English (metric). |
| | |
| 1-1-07 | Removed weight |
| | of grate and cover. |
| | |

# OUTLETS TYPE 2 FOR TYPE A GUTTER

STANDARD 606111–03

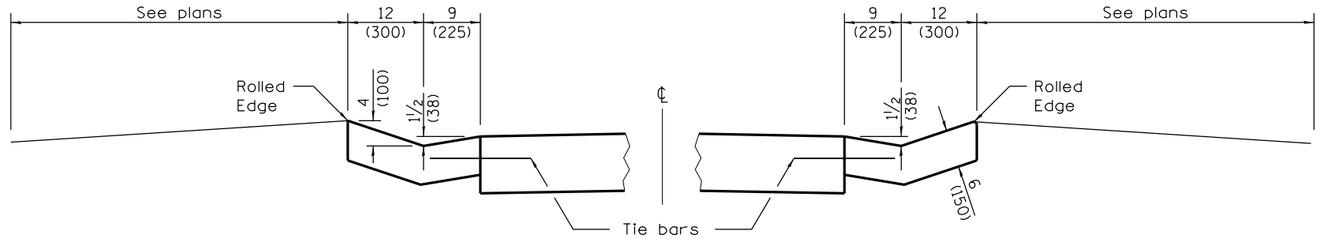


## TYPE B GUTTER

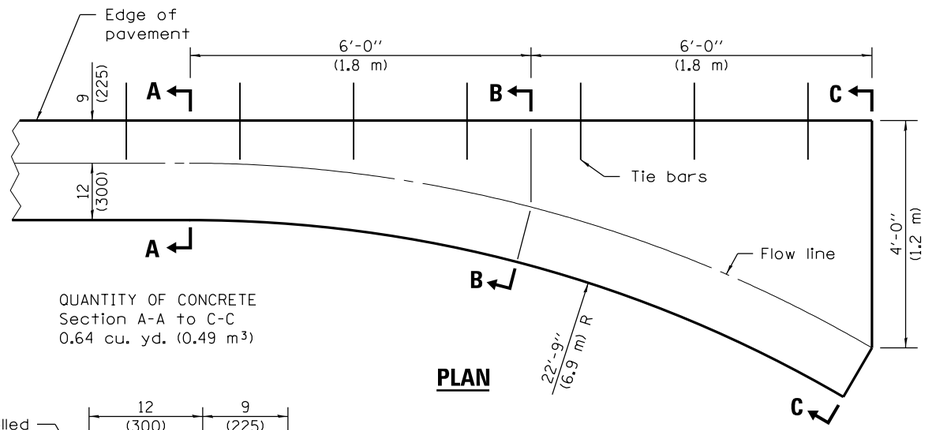


QUANTITY OF CONCRETE
Section A-A to C-C
0.64 cu. yd. (0.49 m³)

## PLAN

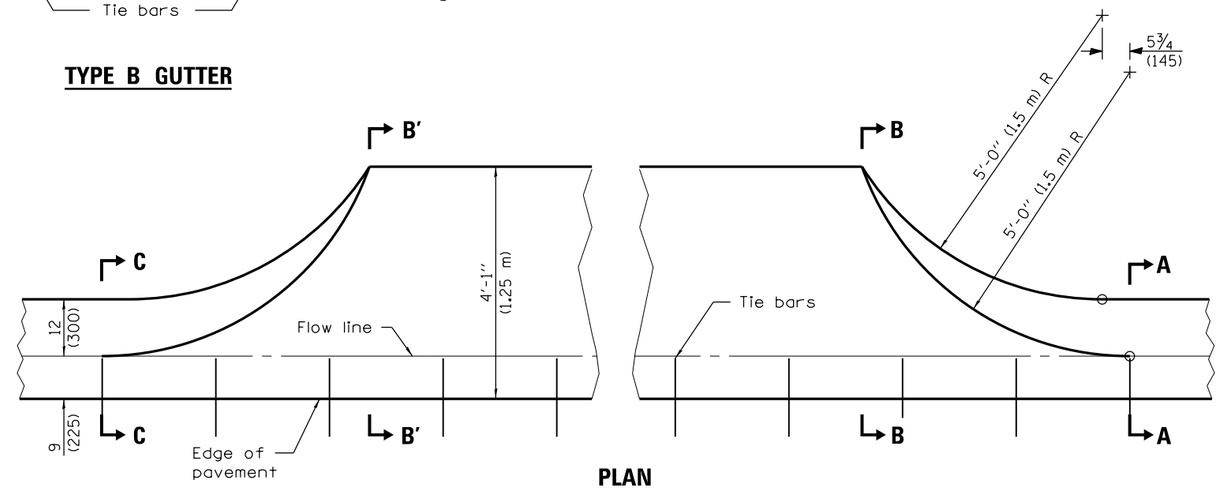


## PLAN

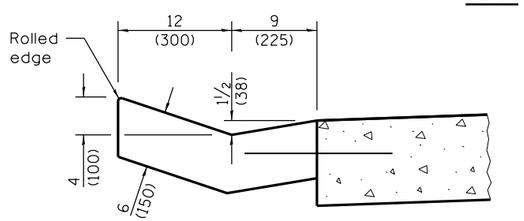


## SECTION A–A

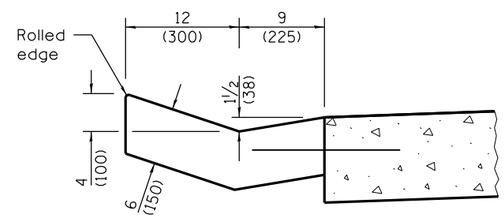


## SECTIONS A–A & C–C

QUANTITY OF CONCRETE
Section B′-B′ to B-B = 0.076 cu. yd./ft. (0.19 m³/m)
Section (C-C to B′-B′) + (B-B to A-A) = 0.44 cu. yd. (0.34 m³)

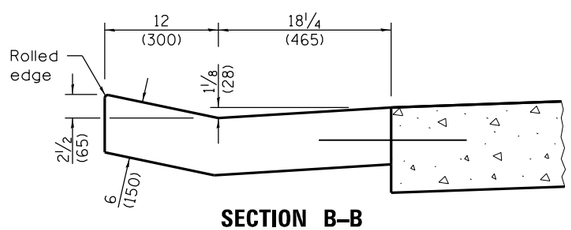


## SECTION B–B

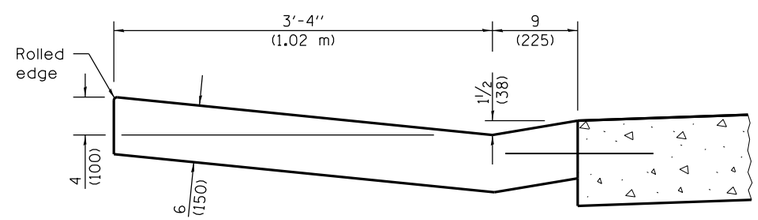


## SECTIONS B–B & B′–B′

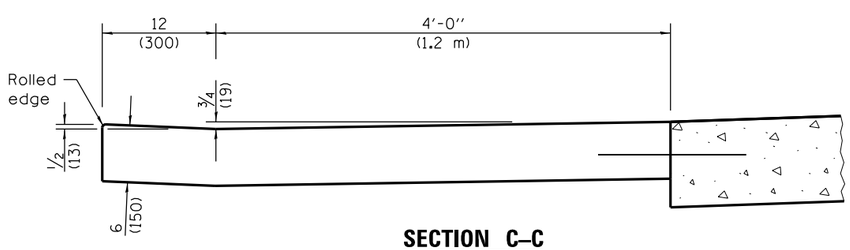


## SECTION C–C

## INLET

## ENTRANCE

## GENERAL NOTES

Tie bars shall be No. 6 (No. 19) at 24 (600) centers unless otherwise shown.

Gutter, gutter inlet, gutter outlet and gutter entrance shall be tied to the pavement in accordance with details for longitudinal construction joint shown on Standard 420001.

Two 1-1/4 x 18 (32 x 450) dowel bars shall be installed in all joints when the gutter is constructed adjacent to flexible pavement.

All dimensions are in inches (millimeters) unless otherwise shown.

Illinois Department of Transportation

PASSED April 1, 2016
Michael Brand
ENGINEER OF POLICY AND PROCEDURES
APPROVED April 1, 2016
ENGINEER OF DESIGN AND ENVIRONMENT

ISSUED 1-1-97

| DATE | REVISIONS |
|---|---|
| 4-1-16 | Changed terminology to |
| | 'welded wire reinforcement'. |
| | |
| 1-1-09 | Switched units to |
| | English (metric). Changed |
| | radii, adjusted qty's. |

# TYPE B GUTTER (INLET, OUTLET & ENTRANCE)

(Sheet 1 of 2)

STANDARD 606201–03

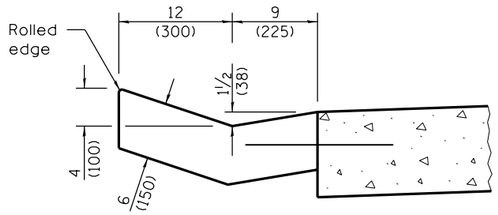


**SECTION A–A**

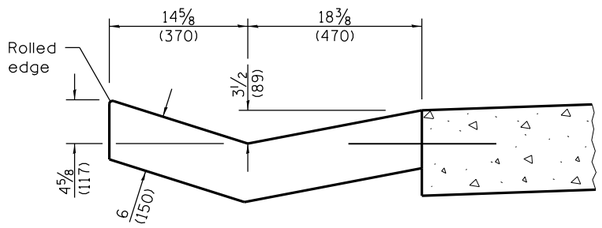


**SECTION B–B**

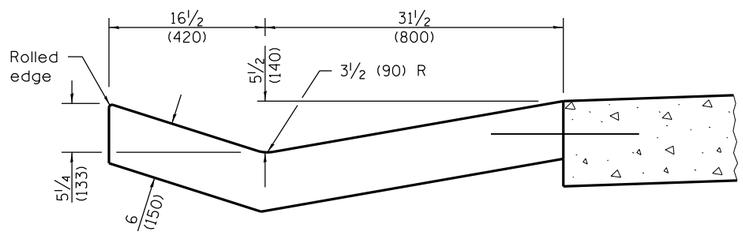


**SECTION C–C**

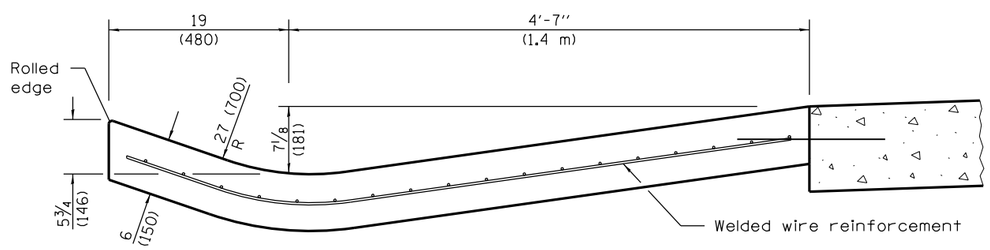


**SECTION D–D**

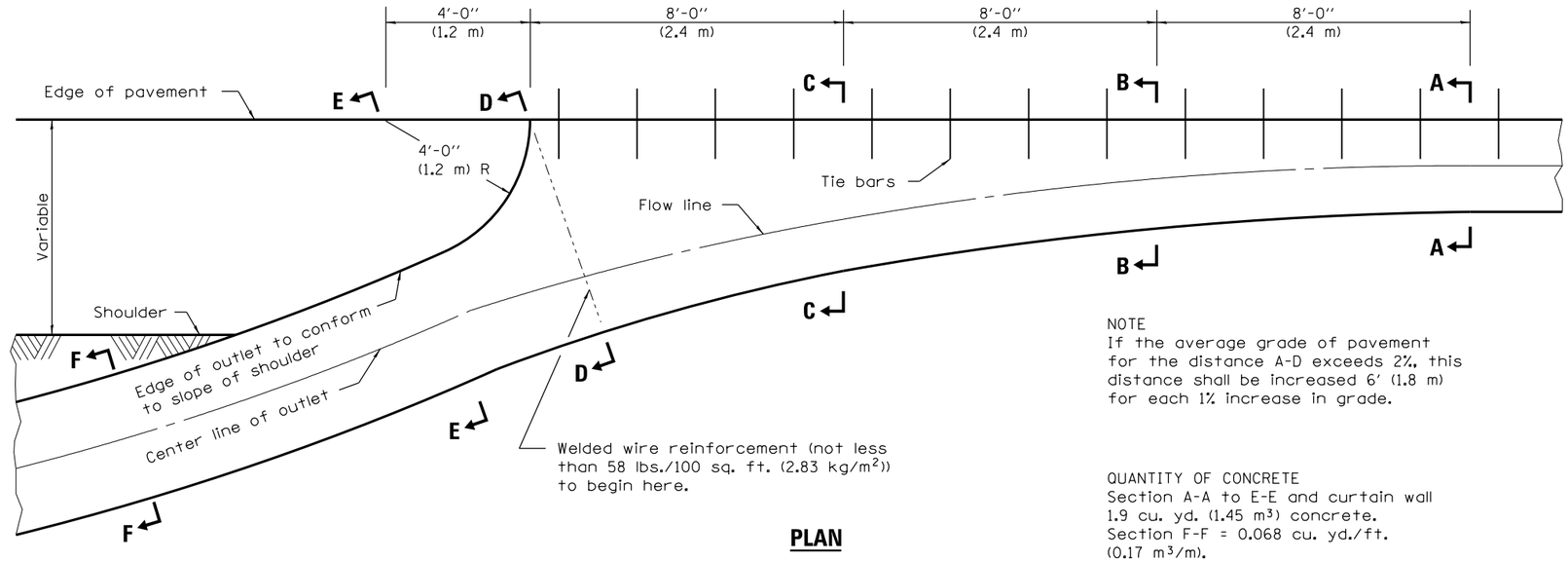


**PLAN**

NOTE
If the average grade of pavement for the distance A-D exceeds 2%, this distance shall be increased 6′ (1.8 m) for each 1% increase in grade.

QUANTITY OF CONCRETE
Section A-A to E-E and curtain wall 1.9 cu. yd. (1.45 m³) concrete.
Section F-F = 0.068 cu. yd./ft. (0.17 m³/m).

**OUTLET**

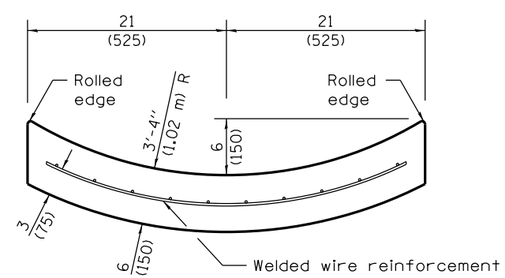


**SECTION F–F**

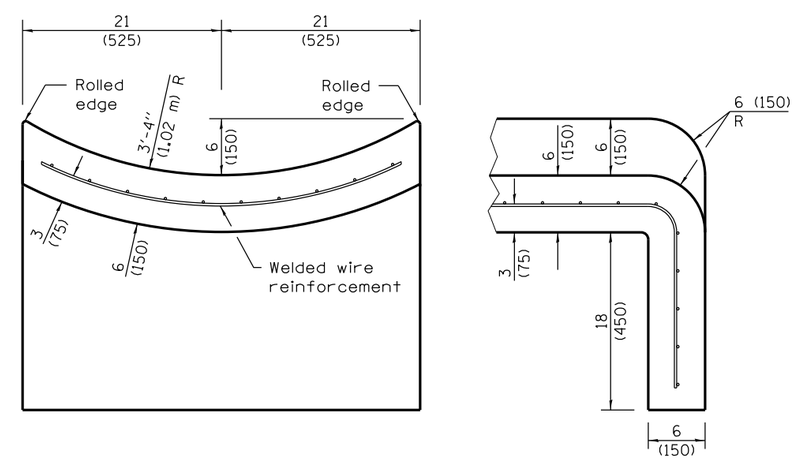


**SECTIONS AT END OF OUTLET**

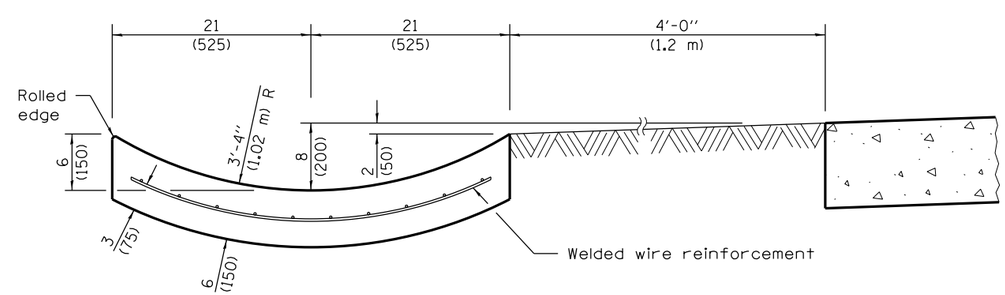


**SECTION E–E**

Illinois Department of Transportation

PASSED April 1, 2016
Michael Brand
ENGINEER OF POLICY AND PROCEDURES
APPROVED April 1, 2016
ENGINEER OF DESIGN AND ENVIRONMENT

ISSUED 1-1-97

# TYPE B GUTTER (INLET, OUTLET & ENTRANCE)

(Sheet 2 of 2)

**STANDARD 606201–03**

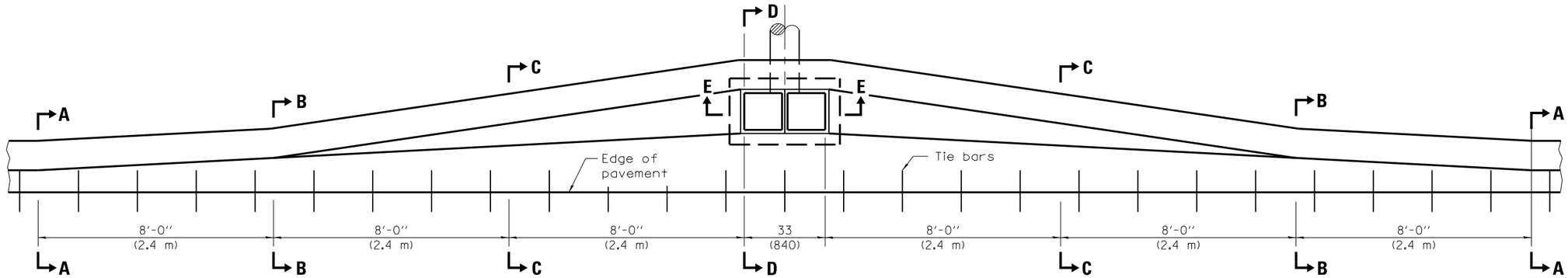


## PLAN – DOUBLE OUTLET

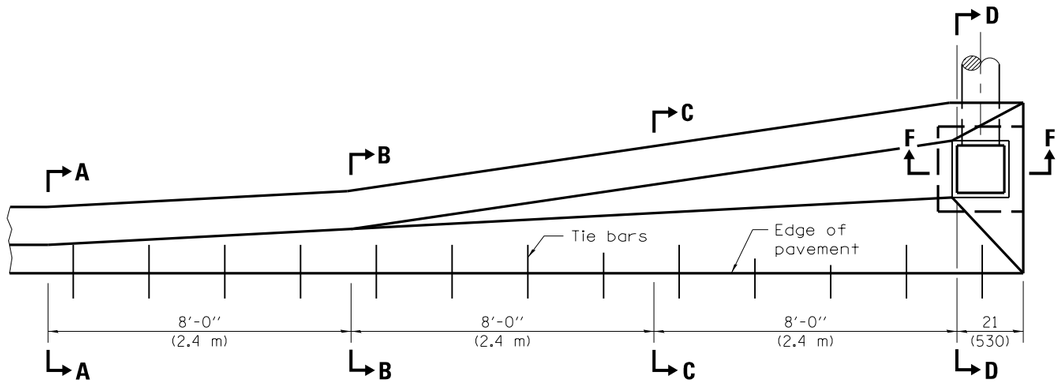


## PLAN – SINGLE OUTLET

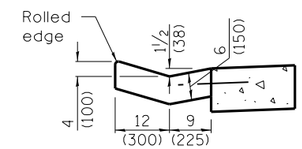


## SECTION A–A

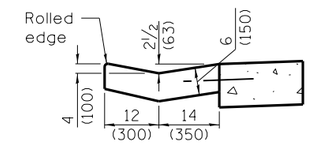


## SECTION B–B

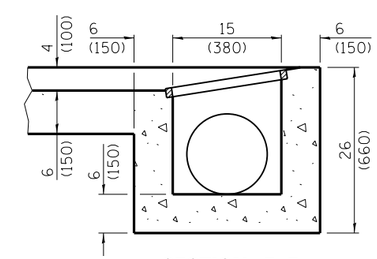


## SECTION F–F

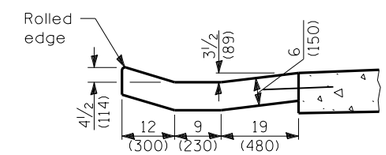


## SECTION C–C

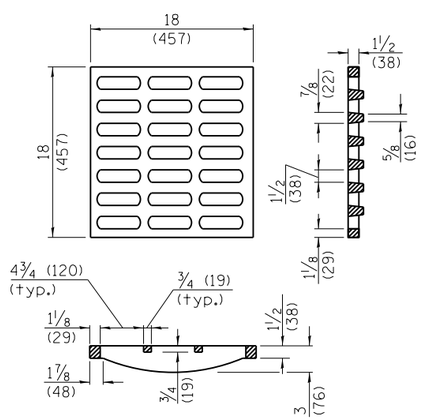


## GRATE TYPE B

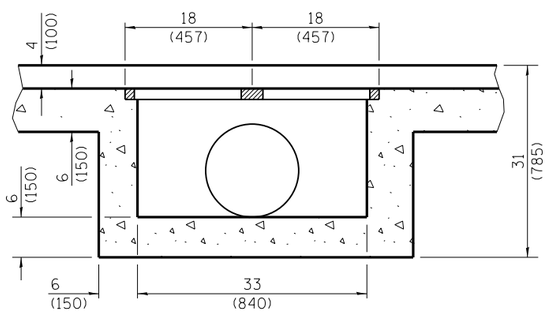


## SECTION E–E

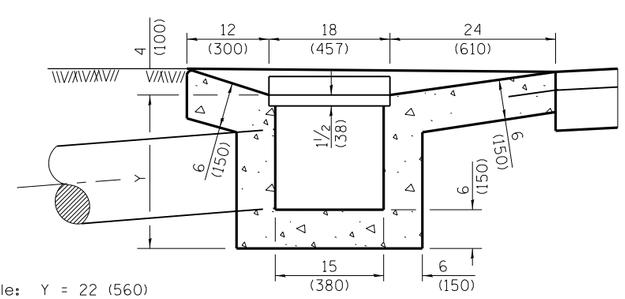


Single: Y = 22 (560)
Double: Y = 27 (685)

## SECTION D–D

## QUANTITIES

| Material | Single | Double |
|---|---|---|
| Concrete - cu. yd. ($m^3$) | 1.7 (1.3) | 3.1 (2.4) |
| Cast Iron Grate - Ea. | 1 | 2 |
| Pipe Drain - Dia. in (mm) | 12 (300) | 15 (375) |

## GENERAL NOTES

The gutter outlet shall be tied to the pavement in accordance with details for longitudinal construction joint shown on Standard 420001.

Tie bars shall be No. 6 (No. 19) at 24 (600) centers unless otherwise shown.

If the average grade of the pavement for the distance A-D exceeds 2%, this distance shall be increased 6′-0″ (1.8 m) for each 1% increase in grade.

All dimensions are in inches (millimeters) unless otherwise shown.

Illinois Department of Transportation

PASSED January 1, 2009
ENGINEER OF POLICY AND PROCEDURES
APPROVED January 1, 2009
ENGINEER OF DESIGN AND ENVIRONMENT

ISSUED 1-1-97

| DATE | REVISIONS |
|---|---|
| 1-1-09 | Switched units to |
| | English (metric). |
| | |
| 1-1-00 | Soft converted metric |
| | rebar. Rem. weight |
| | of grate. |

# OUTLET TYPE 1 FOR TYPE B GUTTER

STANDARD 606206–03

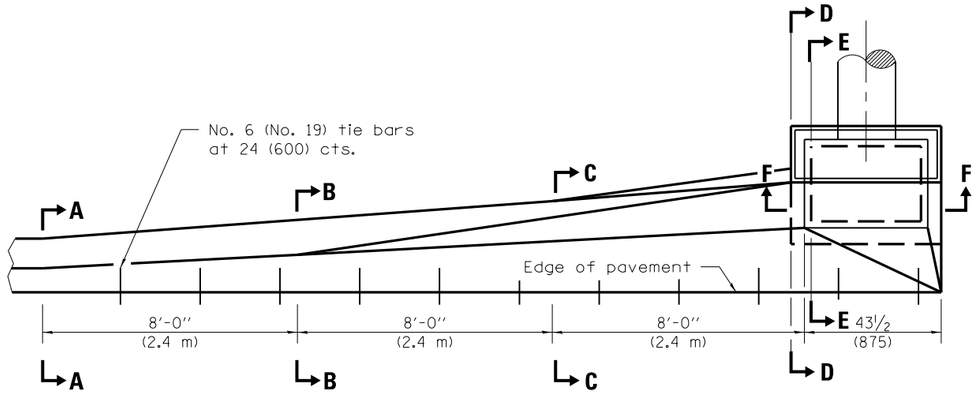


**PLAN – SINGLE OUTLET**

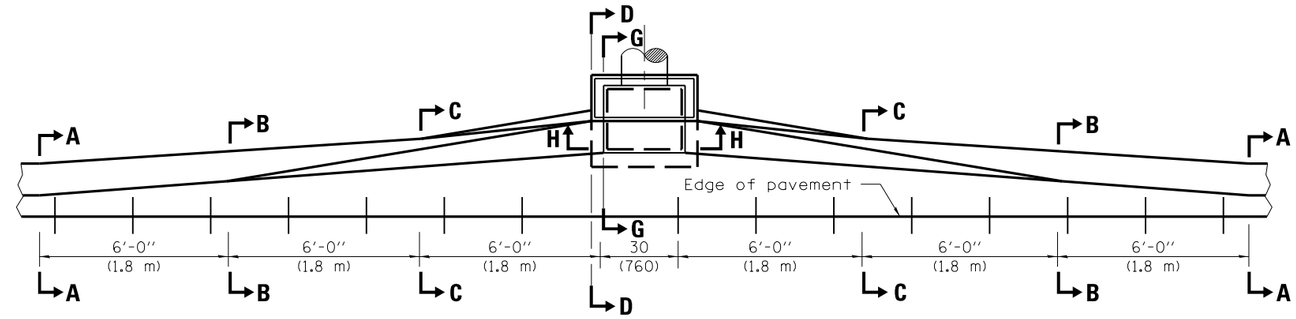


**PLAN – DOUBLE OUTLET**

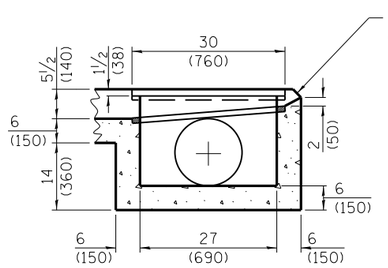


**SECTION F–F**

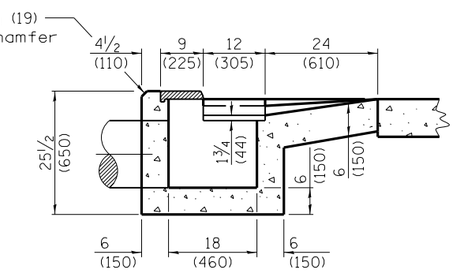

**SECTION E–E**

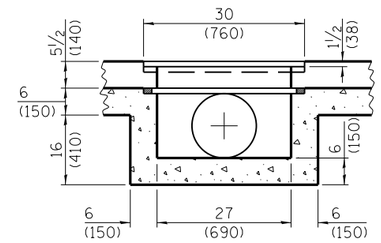

**SECTION H–H**

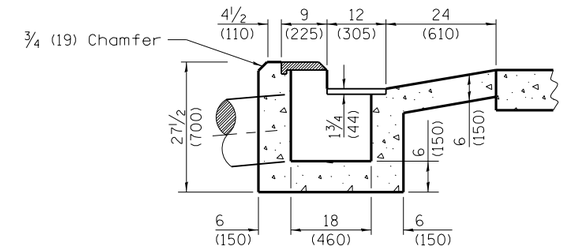


**SECTION G–G**

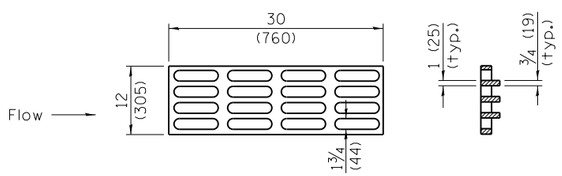


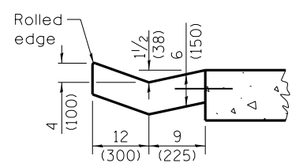


**SECTION A–A**

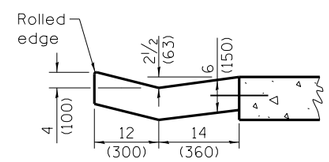


**SECTION B–B**

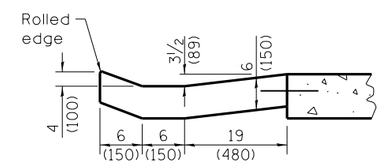


**SECTION C–C**

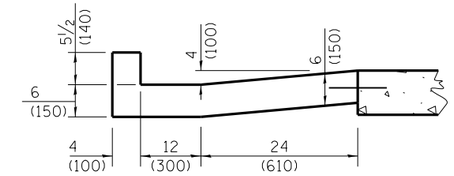

**SECTION D–D**

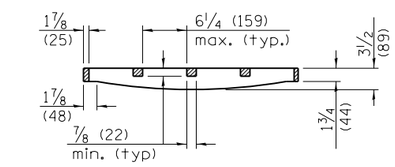

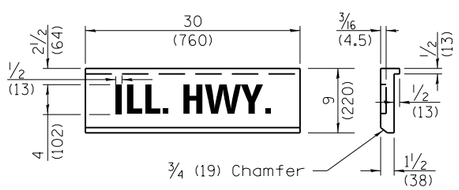


**GRATE AND COVER TYPE 2B**

## QUANTITIES

| Material | Single | Double |
|---|---|---|
| Concrete - cu. yd. ($m^3$) | 1.62 (1.24) | 2.18 (1.67) |
| Cast Iron Grate - Ea. | 1 | 1 |
| Cast Iron Cover - Ea. | 1 | 1 |
| Pipe Drain - Dia. in. (mm) | 12 (300) | 15 (375) |

## GENERAL NOTES

If the average grade of pavement for the distance A-E exceeds 2 percent, this distance shall be increased 6 ft. (1.8 m) for each 1 percent increase in grade.

The gutter outlet shall be tied to the pavement in accordance with details for longitudinal construction joint shown on Standard 420001.

All dimensions are in inches (millimeters) unless otherwise shown.

Illinois Department of Transportation

PASSED January 1, 2009
ENGINEER OF POLICY AND PROCEDURES
APPROVED January 1, 2009
ENGINEER OF DESIGN AND ENVIRONMENT

ISSUED 1-1-97

| DATE | REVISIONS |
|---|---|
| 1-1-09 | Switched units to |
| | English (metric). |
| | |
| 1-1-07 | Soft converted metric |
| | rebars. Rem. weights |
| | of grate & cover. |

# OUTLETS TYPE 2 FOR TYPE B GUTTER

**STANDARD 606211–03**

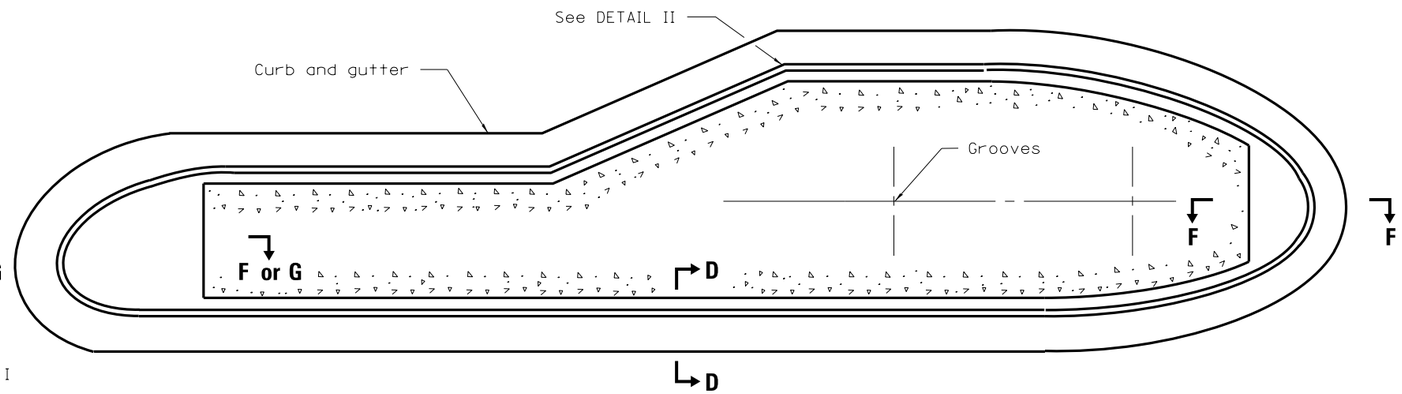


## TYPICAL PLAN OF MEDIAN ISLAND

(SEE SHEET 2 FOR DETAILS OF RAMPED NOSES)

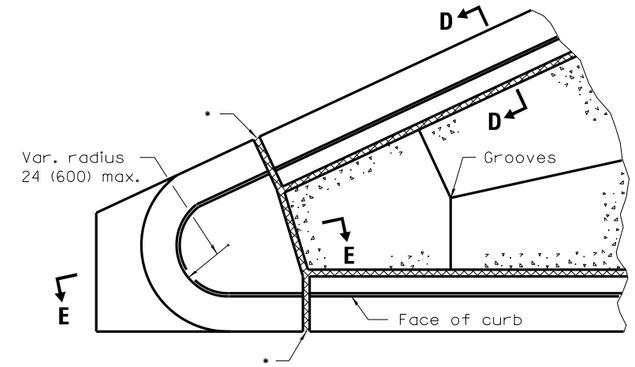


## DETAIL I

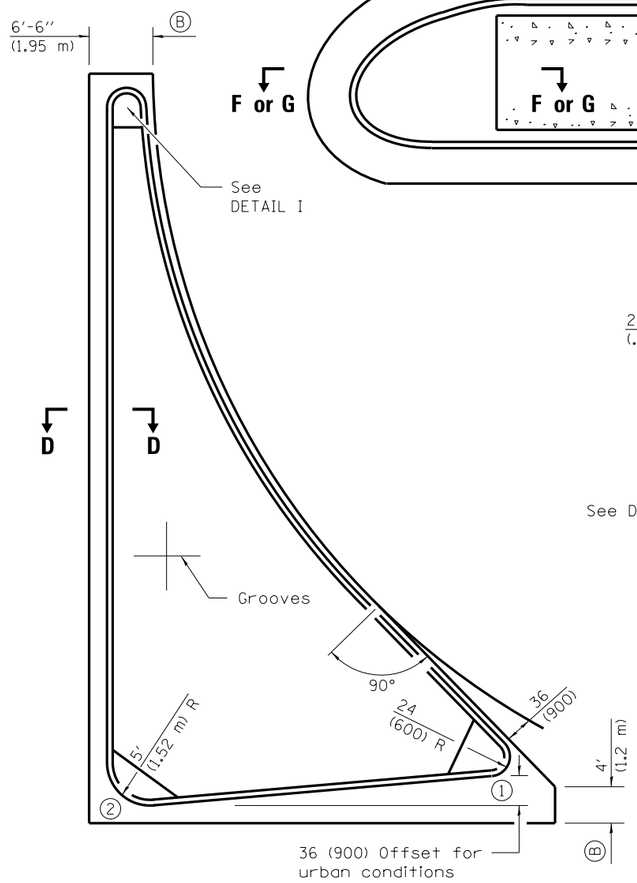


## LARGE ISLAND

(FREE FLOW DESIGN)

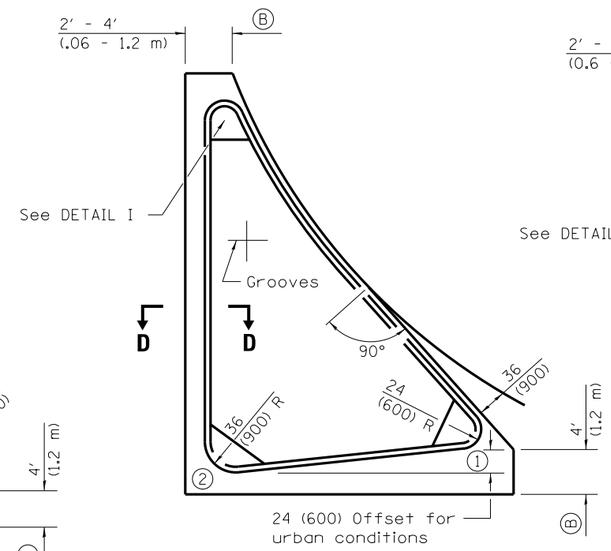


## INTERMEDIATE ISLAND

(FOR RIGHT TURN LANE DESIGN)

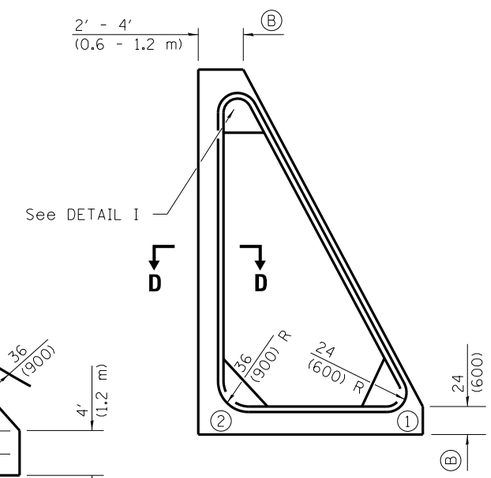


## SMALL ISLAND

## TYPICAL PLANS OF CORNER ISLANDS

(SEE SHEET 2 FOR DETAILS OF RAMPED NOSES)

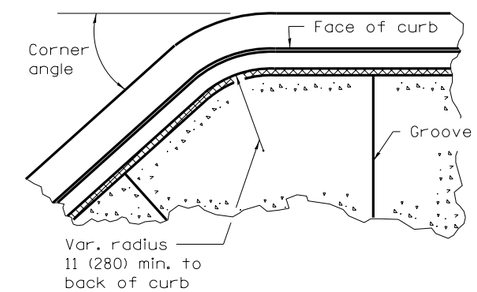


## DETAIL II

Typical detail when corner angle is less than 90° and for other corners with radius greater than 24 (600).

NOTE:
The blockouts (B) for the islands shall be extended so that the termination will line up with proposed or existing pavement joint.

Noses (1) and (2) shall be ramped unless noted otherwise on the plans. (See sheet 2 for length)

## GENERAL NOTES

PEJF = Preformed expansion joint filler.

Median layout and radii shall be as shown on the plans.

Keyed longitudinal construction joints shall be constructed without tie bars.

See Standard 420001 and 606001 for details not shown.

* ¾ (20) PEJF conforming to the full cross section of the curb, gutter and median surface.

X = PCC base course plus HMA thickness.

t = Pavement or pcc base course thickness.

All dimensions are in inches (millimeters) unless otherwise shown.

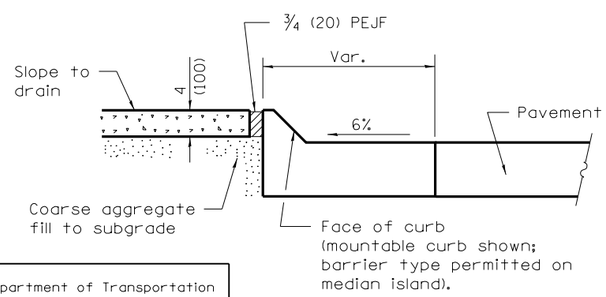


## SECTION D–D

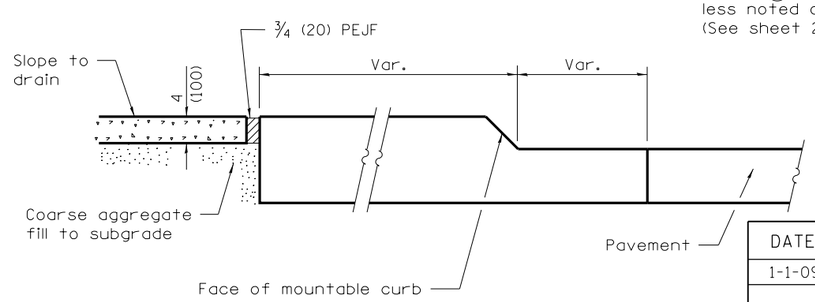


## SECTION E–E

Illinois Department of Transportation

PASSED January 1, 2009
ENGINEER OF POLICY AND PROCEDURES
APPROVED January 1, 2009
ENGINEER OF DESIGN AND ENVIRONMENT

ISSUED 1-1-97

| DATE | REVISIONS |
|---|---|
| 1-1-09 | Switched units to |
| | English (metric). |
| | |
| 1-1-07 | Switched to Hot-Mix |
| | Asphalt (HMA) |
| | terminology. |

# PC CONCRETE ISLANDS AND MEDIANS

(Sheet 1 of 2)

STANDARD 606301–04

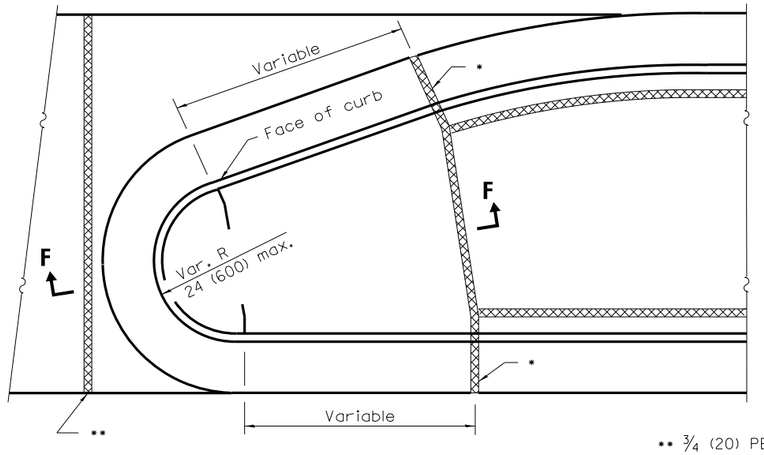


**TYPE P MEDIAN SURFACE**

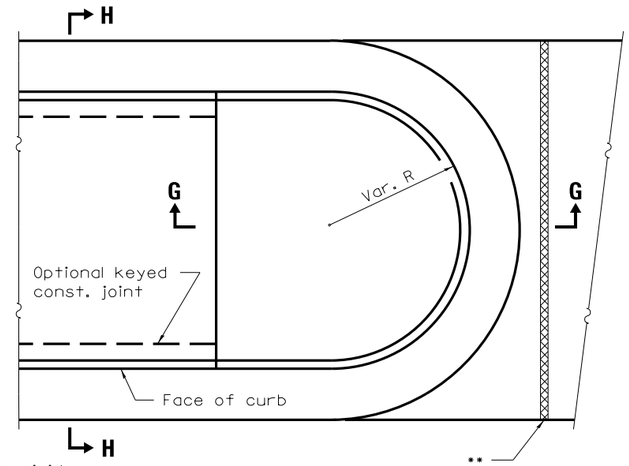


** ¾ (20) PEJF between rigid pavement and median end. Align with joint in adjacent pavement.

**SOLID MEDIAN**

**PLAN**

(RAMPED NOSES)

| TABLE OF DIMENSIONS | | | | | |
|---|---|---|---|---|---|
| TYPE SB MEDIANS | | | | | |
| TYPE | A | B | C | D | $R_1$ |
| SB-6.06 (SB-15.15) | 6 (150) | 1 (25) | 6 (150) | 6 (150) | 1 (25) |
| SB-6.12 (SB-15.30 | 12 (300) | 1 (25) | 6 (150) | 6 (150) | 1 (25) |
| SB-6.18 (SB-15.45) | 18 (450) | 1 (25) | 6 (150) | 6 (150) | 1 (25) |
| SB-6.24 (SB-15.60) | 24 (600) | 1 (25) | 6 (150) | 6 (150) | 1 (25) |
| SB-9.06 (SB-22.15) | 6 (150) | 2 (50) | 5 (125) | 9 (225) | 1 (25) |
| SB-9.12 (SB-22.30) | 12 (300) | 2 (50) | 5 (125) | 9 (225) | 1 (25) |
| SB-9.18 (SB-22.45) | 18 (450) | 2 (50) | 5 (125) | 9 (225) | 1 (25) |
| SB-9.24 (SB-22.60) | 24 (600) | 2 (50) | 5 (125) | 9 (225) | 1 (25) |

| TABLE OF DIMENSIONS | | | | | |
|---|---|---|---|---|---|
| TYPE M AND SM MEDIANS | | | | | |
| TYPE | A | B | C | D | $R_1$ |
| M-2.06 (M-5.15) | 6 (150) | 2 (50) | 4 (100) | 2 (50) | 2 (50) |
| M-2.12 (M-5.30) | 12 (300) | 2 (50) | 4 (100) | 2 (50) | 2 (50) |
| SM-4.06 (SM-10.15) | 6 (150) | 4 (100) | 3 (75) | 4 (100) | 3 (75) |
| SM-4.12 (SM-10.30) | 12 (300) | 4 (100) | 3 (75) | 4 (100) | 3 (75) |
| SM-4.18 (SM-10.45) | 18 (450) | 4 (100) | 3 (75) | 4 (100) | 3 (75) |
| SM-4.24 (SM-10.60) | 24 (600) | 4 (100) | 3 (75) | 4 (100) | 3 (75) |
| SM-6.06 (SM-15.15) | 6 (150) | 6 (150) | 2 (50) | 6 (150) | 2 (50) |
| SM-6.12 (SM-15.30) | 12 (300) | 6 (150) | 2 (50) | 6 (150) | 2 (50) |
| SM-6.18 (SM-15.45) | 18 (450) | 6 (150) | 2 (50) | 6 (150) | 2 (50) |
| SM-6.24 (SM-15.60) | 24 (600) | 6 (150) | 2 (50) | 6 (150) | 2 (50) |

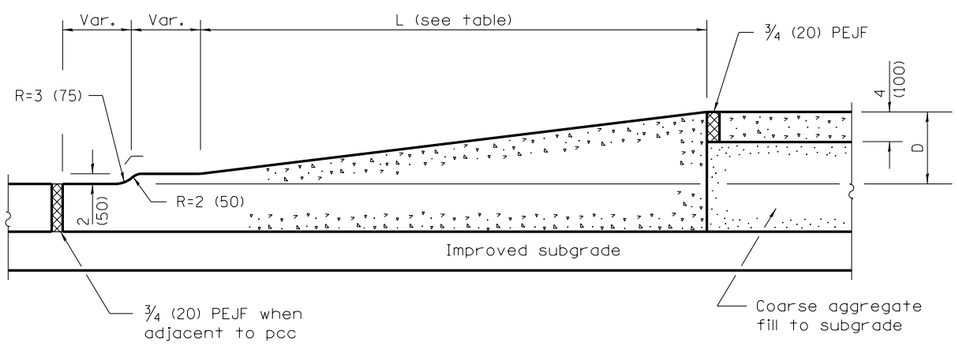


**SECTION F–F**

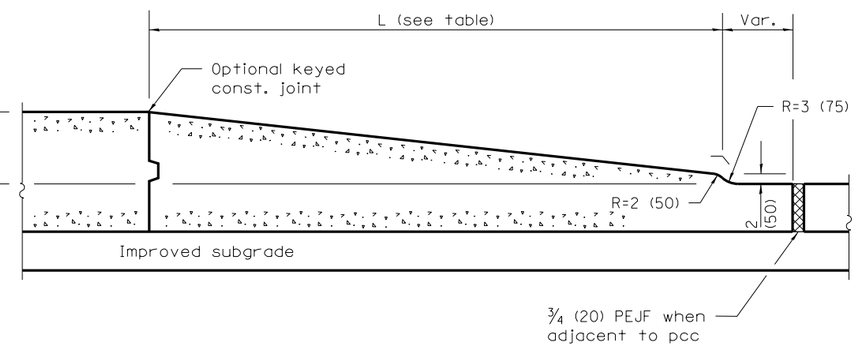


**SECTION G–G**

| TABLE OF RAMPED NOSE LENGTHS | |
|---|---|
| TYPE OF NOSE | L |
| Median | 6′ (1.8 m) |
| Small Island | 24 (600) |
| Intermediate Island | 4′ (1.2 m) |
| Large Island | 6′ (1.8 m) |

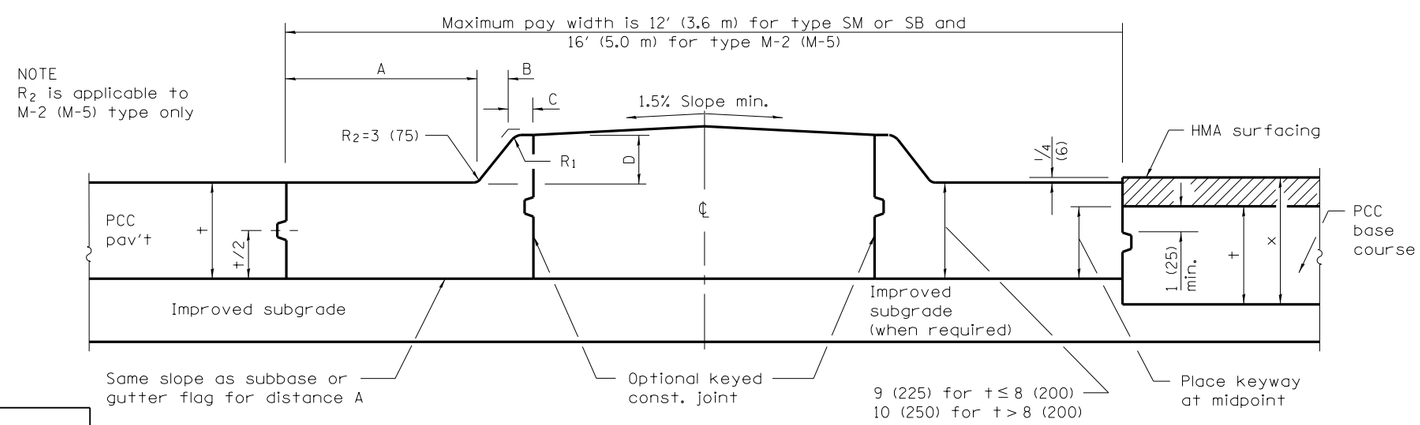


**HALF SECTION FOR PCC PAVEMENT**

**HALF SECTION FOR PCC BASE COURSE**

**SECTION H–H**

(TYPE SM, SB & M-5 (M-2) MEDIANS)

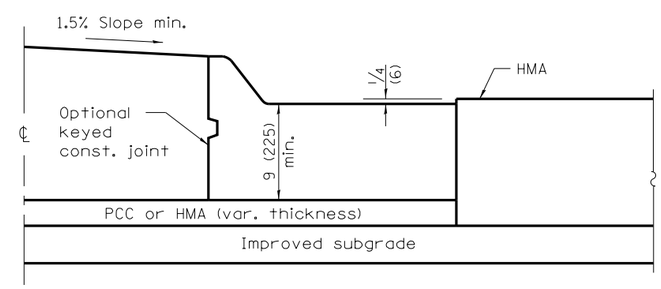


**HALF SECTION FOR FLEXIBLE PAVEMENT**

Illinois Department of Transportation

PASSED January 1, 2009
ENGINEER OF POLICY AND PROCEDURES
APPROVED January 1, 2009
ENGINEER OF DESIGN AND ENVIRONMENT

ISSUED 1-1-97

# PC CONCRETE ISLANDS AND MEDIANS

(Sheet 2 of 2)

**STANDARD 606301–04**

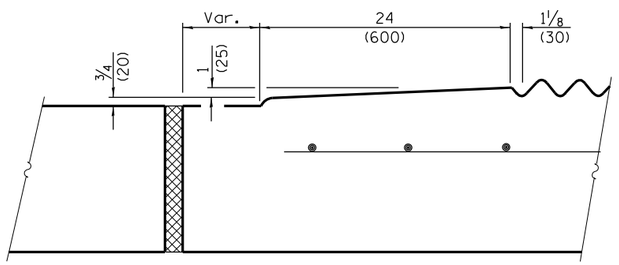


**SECTION A–A**

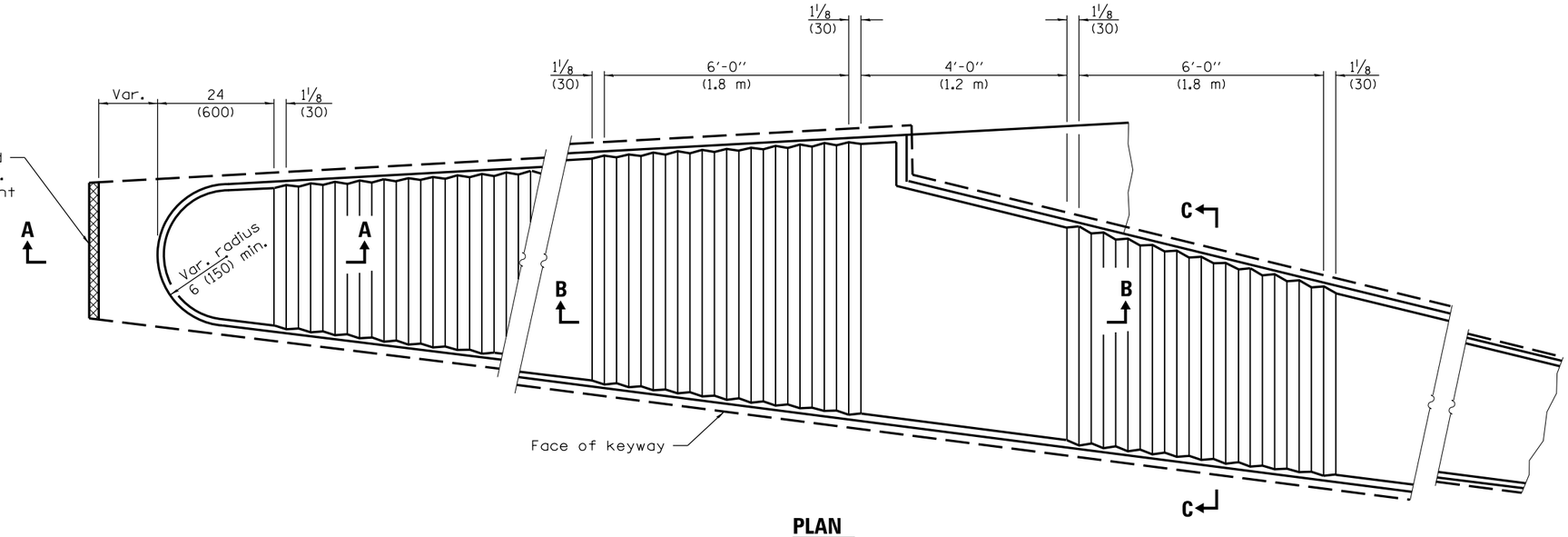


**PLAN**

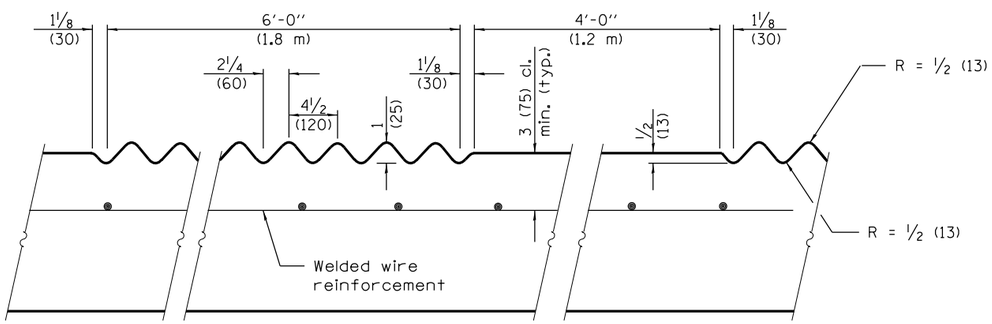


**SECTION B–B**

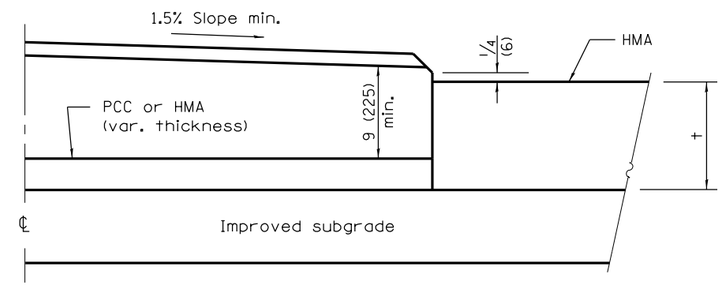


**HALF SECTION FOR FLEXIBLE PAVEMENT**
**SECTION C–C**

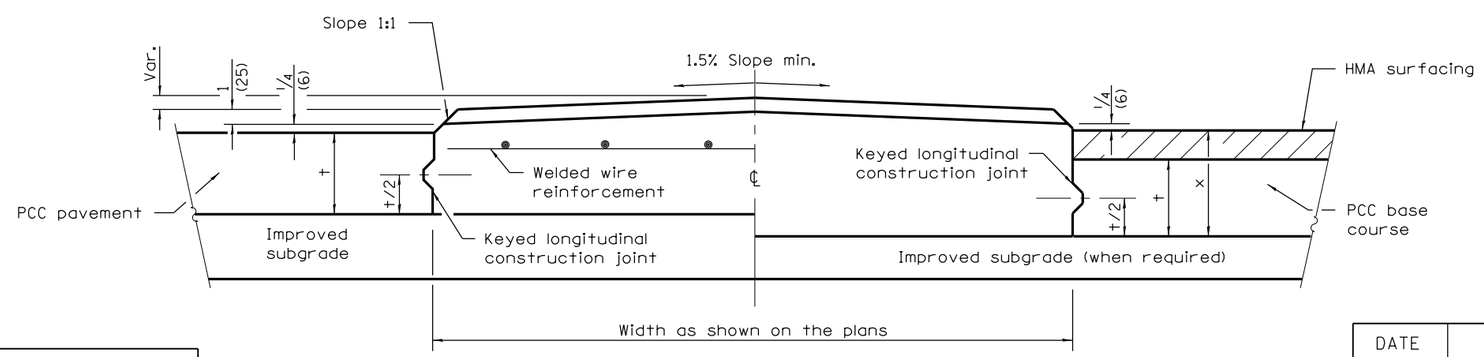


**HALF SECTION FOR PCC PAVEMENT**

**SECTION C–C**

**HALF SECTION FOR PCC BASE COURSE**

## GENERAL NOTES

PEJF = Preformed expansion joint filler.

Median layout and radii shall be as shown on the plans.

Keyed longitudinal construction joints shall be constructed without tie bars.

X = PCC base course plus HMA thickness.

t = Pavement or pcc base course thickness.

Welded wire reinforcement required for medians built contiguous to reinforced pcc pavement only.

See Standards 420001 and 420701 for details not shown.

All dimensions are in inches (millimeters) unless otherwise shown.

Illinois Department of Transportation

PASSED April 1, 2016
Michael Brand
ENGINEER OF POLICY AND PROCEDURES
APPROVED April 1, 2016
ENGINEER OF DESIGN AND ENVIRONMENT

ISSUED 1-1-97

| DATE | REVISIONS |
|---|---|
| 4-1-16 | Changed terminology to |
| | 'welded wire reinforcement'. |
| | |
| 1-1-09 | Switched units to |
| | English (metric). |
| | |

# CORRUGATED PC CONCRETE MEDIANS

**STANDARD 606306–04**

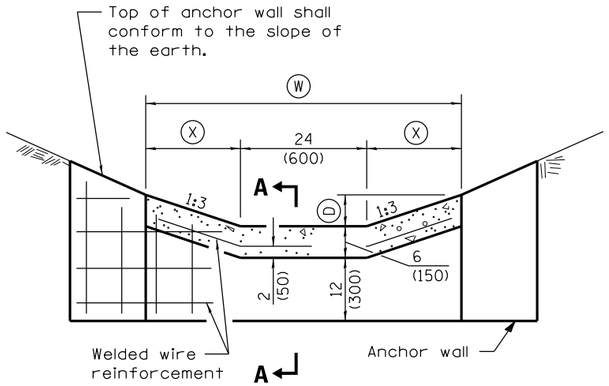


**ELEVATION**

## TABLE FOR PAVED DITCH TYPE A

| TYPE | D | W | X | Flow Area sq. ft. (m²) | Conc. Area sq. yd. (m²) |
|---|---|---|---|---|---|
| A-15 | 6 (150) | 5′-0″ (1.5 m) | 18 (450) | 1.75 (0.175) | 0.278 (0.225) |
| A-22 | 9 (225) | 6′-6″ (1.95 m) | 27 (675) | 3.19 (0.287) | 0.361 (0.293) |
| A-30 | 12 (300) | 8′-0″ (2.4 m) | 36 (900) | 5.00 (0.450) | 0.444 (0.360) |
| A-37 | 15 (375) | 9′-6″ (2.85 m) | 3′-9″ (1.12 m) | 7.19 (0.645) | 0.528 (0.426) |
| A-45 | 18 (450) | 11′-0″ (3.3 m) | 4′-6″ (1.35 m) | 9.75 (0.877) | 0.611 (0.495) |
| A-52 | 21 (525) | 12′-6″ (3.75 m) | 5′-3″ (1.58 m) | 12.69 (1.144) | 0.694 (0.564) |
| A-60 | 24 (600) | 14′-0″ (4.2 m) | 6′-0″ (1.8 m) | 16.00 (1.440) | 0.778 (0.630) |

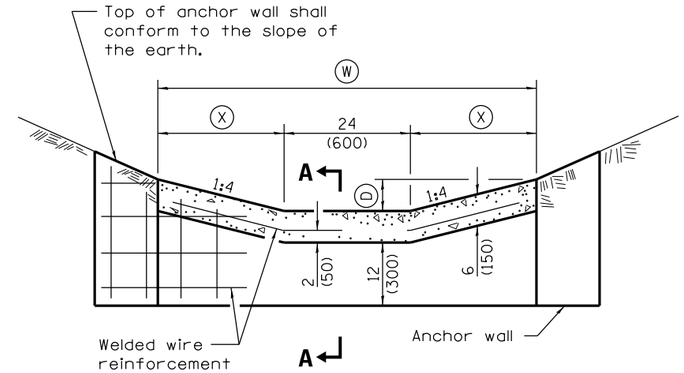


**ELEVATION**

## TABLE FOR PAVED DITCH TYPE B

| TYPE | D | W | X | Flow Area sq. ft. (m²) | Conc. Area sq. yd. (m²) |
|---|---|---|---|---|---|
| B-15 | 6 (150) | 6′-0″ (1.8 m) | 24 (600) | 2.00 (0.180) | 0.333 (0.270) |
| B-22 | 9 (225) | 8′-0″ (2.4 m) | 36 (900) | 3.75 (0.337) | 0.444 (0.360) |
| B-30 | 12 (300) | 10′-0″ (3.0 m) | 4′-0″ (1.2 m) | 6.00 (0.540) | 0.555 (0.450) |
| B-37 | 15 (375) | 12′-0″ (3.6 m) | 5′-0″ (1.5 m) | 8.75 (0.787) | 0.667 (0.540) |
| B-45 | 18 (450) | 14′-0″ (4.2 m) | 6′-0″ (1.8 m) | 12.00 (1.080) | 0.778 (0.630) |
| B-52 | 21 (525) | 16′-0″ (4.8 m) | 7′-0″ (2.1 m) | 15.75 (1.417) | 0.889 (0.720) |
| B-60 | 24 (600) | 18′-0″ (5.4 m) | 8′-0″ (2.4 m) | 20.00 (1.800) | 1.000 (0.810) |

## PAVED DITCH TYPE A

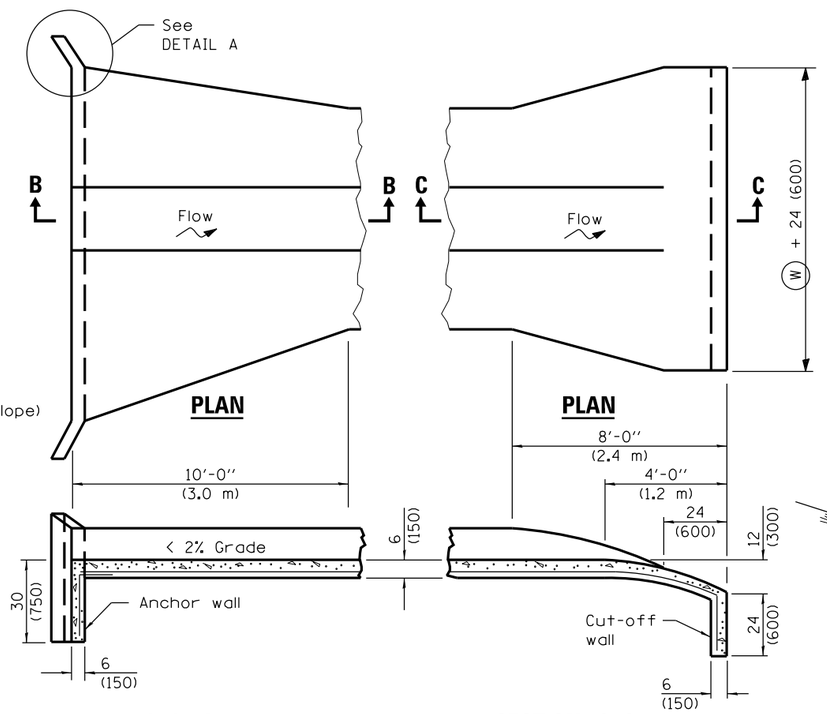


**SECTION B–B** **SECTION C–C**

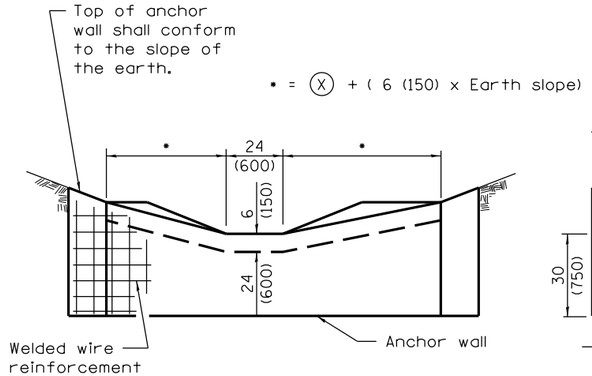


**ELEVATION**

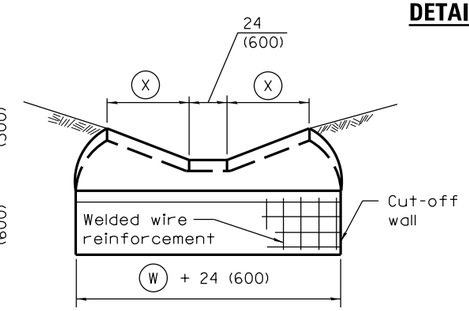


**ELEVATION**

**DETAIL OF UPSTREAM END**

**DETAIL OF DOWNSTREAM END**

## PAVED DITCH TYPE B

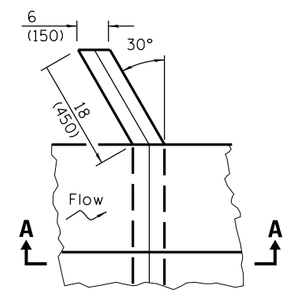


**DETAIL A**

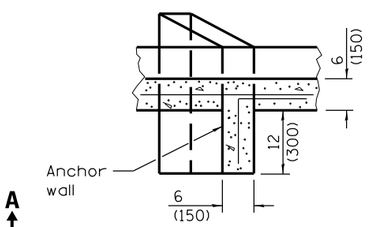


**SECTION A–A**

**DETAIL OF ANCHOR WALL**

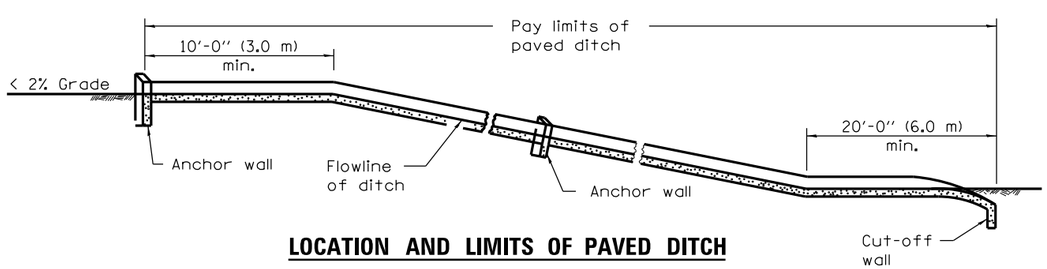


**LOCATION AND LIMITS OF PAVED DITCH**

## GENERAL NOTES

All slopes are expressed as of vertical displacement to units of horizontal displacement (V:H).

All dimensions are in inches (millimeters) unless otherwise shown.

Illinois Department of Transportation

PASSED April 1, 2016
Michael Brand
ENGINEER OF POLICY AND PROCEDURES

APPROVED April 1, 2016
ENGINEER OF DESIGN AND ENVIRONMENT

ISSUED 1-1-97

| DATE | REVISIONS |
|---|---|
| 4-1-16 | Changed terminology to 'welded wire reinforcement'. |
| 1-1-09 | Switched units to English (metric). |

# PAVED DITCH

**STANDARD 606401–02**

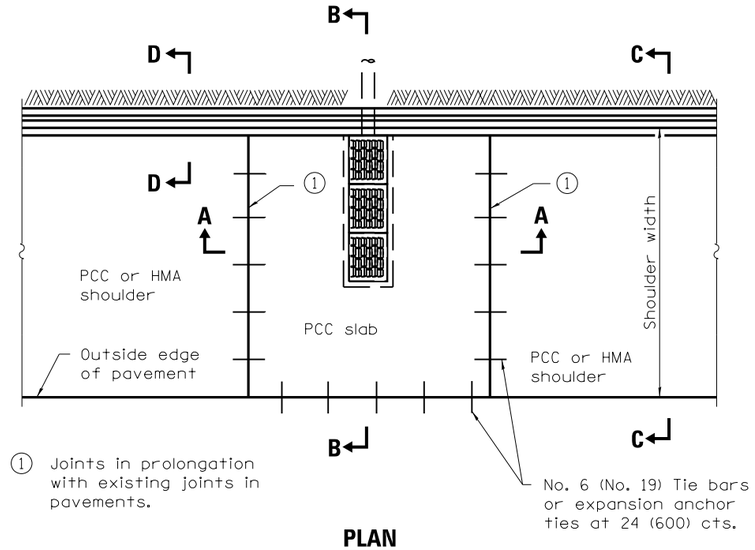


**PLAN**

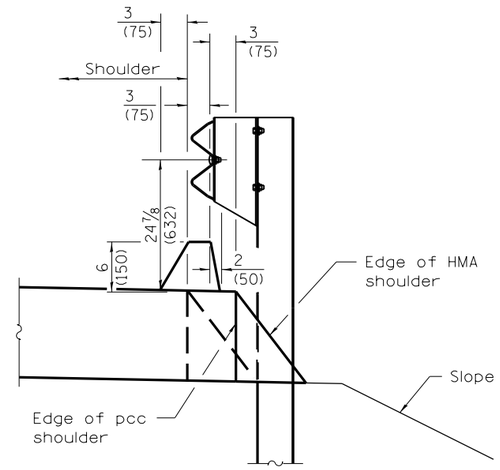


**DETAIL B**

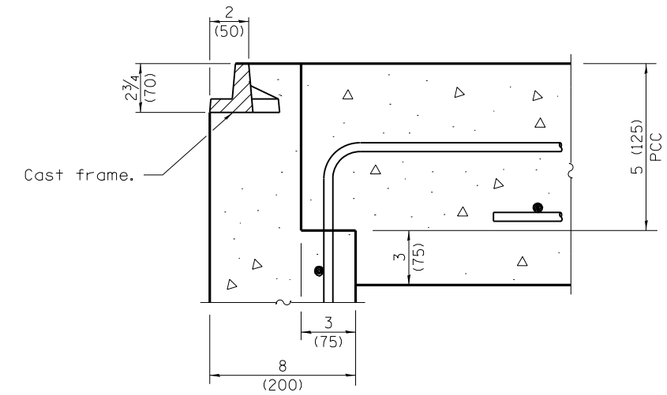


**DETAIL A**

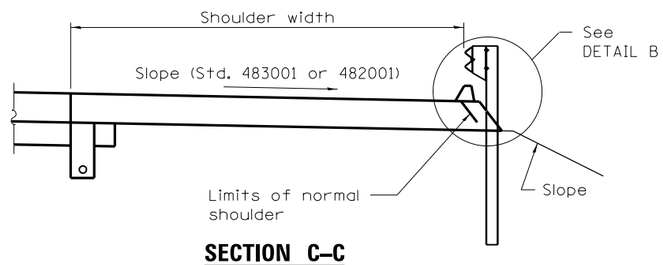


**SECTION C–C**

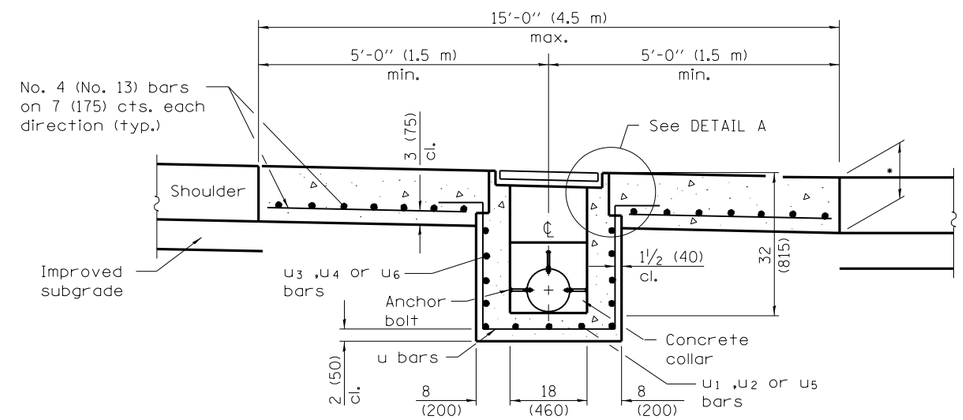


**SEC. A–A**

* PCC slab thickness same as adjacent shoulder.

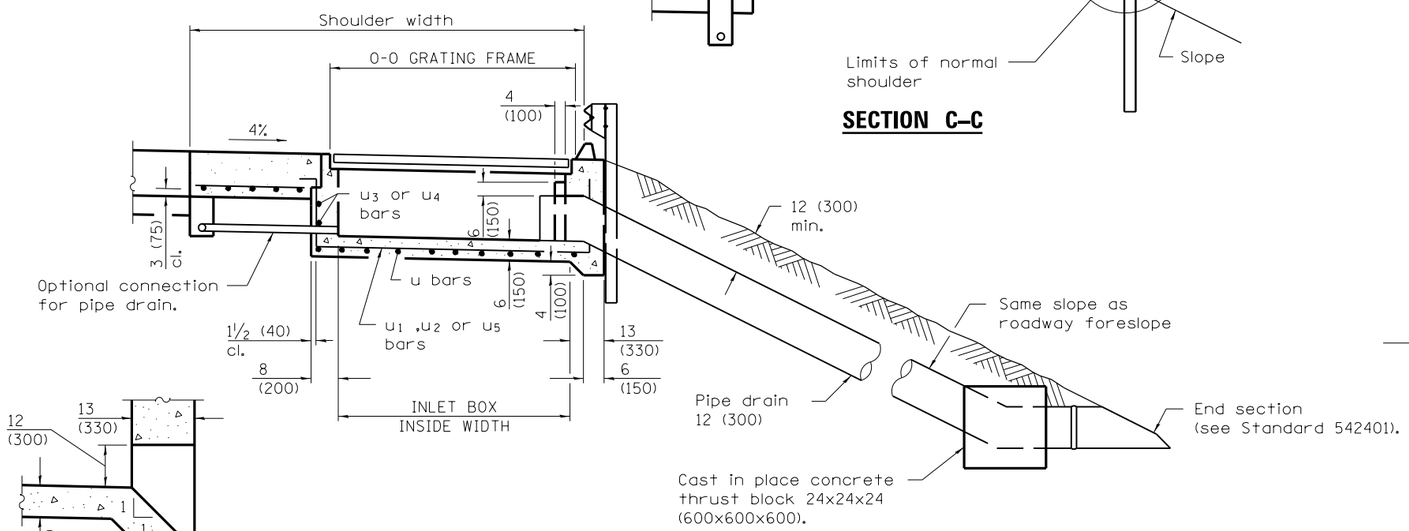


**SEC. B–B**

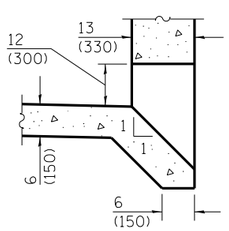


**BOX OUTLET WHEN PRECAST**

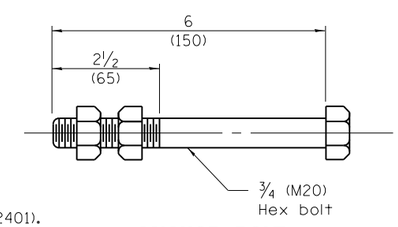


**ANCHOR BOLT**

(Used to tie pipe to concrete collar)

| INLET TYPE | SHOULDER WIDTH | O-O GRATING FRAME | INLET BOX INSIDE WIDTH | INLET BOX INSIDE LENGTH |
|---|---|---|---|---|
| Type E | 8′ (2.4 m) | 4′-4″ (1.325 m) | 3′-11″ (1.195 m) | 18 (460) |
| Type F | 10′ (3.0 m) | 6′-5″ (1.960 m) | 6′-0″ (1.830 m) | 18 (460) |
| Type G | 5′ (1.5 m) or less | 27 (690) | 22 (560) | 18 (460) |

## GENERAL NOTES

See Standard 420001 for joint details not shown.

All exposed edges of the inlet, except the upper perimeter, shall be beveled 3/4 (20).

For placement of drainage elements on existing construction with existing rigid pavement, substitute expansion anchor ties for tie bars. For nonrigid pavements or monolithic construction of pcc slab and shoulder, omit tie bars.

All diminsions are in inches (millimeters) unless otherwise shown.

Illinois Department of Transportation

PASSED January 1, 2012
Michael Brand
ENGINEER OF POLICY AND PROCEDURES
APPROVED January 1, 2012
ENGINEER OF DESIGN AND ENVIRONMENT

ISSUED 1-1-97

| DATE | REVISIONS |
|---|---|
| 1-1-12 | Added Type G inlet type. |
| | |
| | |
| 1-1-10 | Added bolt-down to |
| | frame & grate. Omitted |
| | steel frame. |

# SHOULDER INLET WITH CURB

(Sheet 1 of 2)

**STANDARD 610001–06**

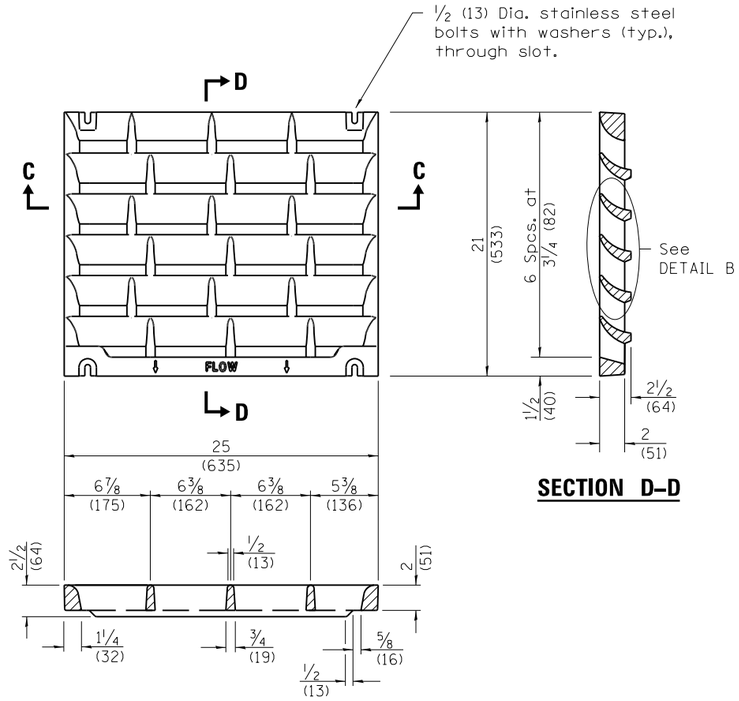


## SECTION C–C

## SECTION D–D

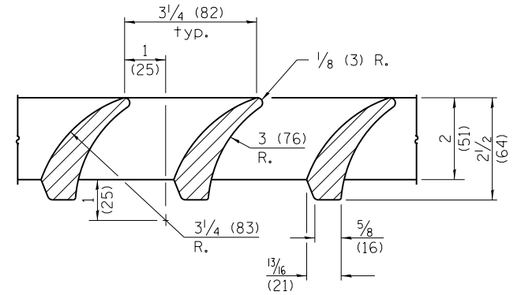


## DETAIL B

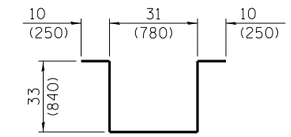


## BAR u

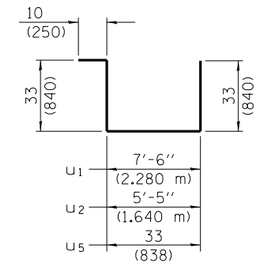


## BARS u1 , u2 & u5

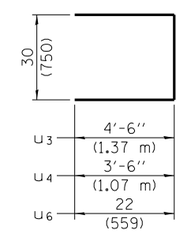


## BARS u3 , u4 & u6

## INLET BOX

| REQUIRED MATERIAL | | | |
|---|---|---|---|
| TYPE F | | | |
| Bar | Qty. | Size | Length |
| u | 8 | No. 4 (No.13) | 9′-9″ (2.96 m) |
| u1 | 3 | No. 4 (No.13) | 13′-10″ (4.21 m) |
| u3 | 6 | No. 4 (No.13) | 11′-6″ (3.49 m) |
| Concrete | | cu. yds. ($m^3$) | 1.7 (1.3) |
| Reinf. bars | | lbs. (kg) | 126 (57.2) |
| Grating | | sq. ft. ($m^2$) | 10.9 (1.02) |
| TYPE E | | | |
| Bar | Qty. | Size | Length |
| u | 6 | No. 4 (No.13) | 9′-9″ (2.96 m) |
| u2 | 3 | No. 4 (No.13) | 11′-9″ (3.57 m) |
| u4 | 6 | No. 4 (No.13) | 9′-6″ (2.89 m) |
| Concrete | | cu. yds. ($m^3$) | 1.3 (1.0) |
| Reinf. bars | | lbs. (kg) | 101 (45.8) |
| Grating | | sq. ft. ($m^2$) | 7.3 (0.68) |
| TYPE G | | | |
| Bar | Qty. | Size | Length |
| u | 4 | No. 4 (No.13) | 9′-9″ (2.69 m) |
| u5 | 3 | No. 4 (No.13) | 9′-1″ (2.78 m) |
| u6 | 4 | No. 4 (No.13) | 6′-2″ (1.87 m) |
| Concrete | | cu. yds. ($m^3$) | 0.5 (0.4) |
| Reinf. bars | | lbs. (kg) | 55 (25.0) |
| Grating | | sq. ft. ($m^2$) | 3.6 (0.34) |

## DETAIL OF CAST GRATE

Type G requires 1 grate
Type E requires 2 grates
Type F requires 3 grates

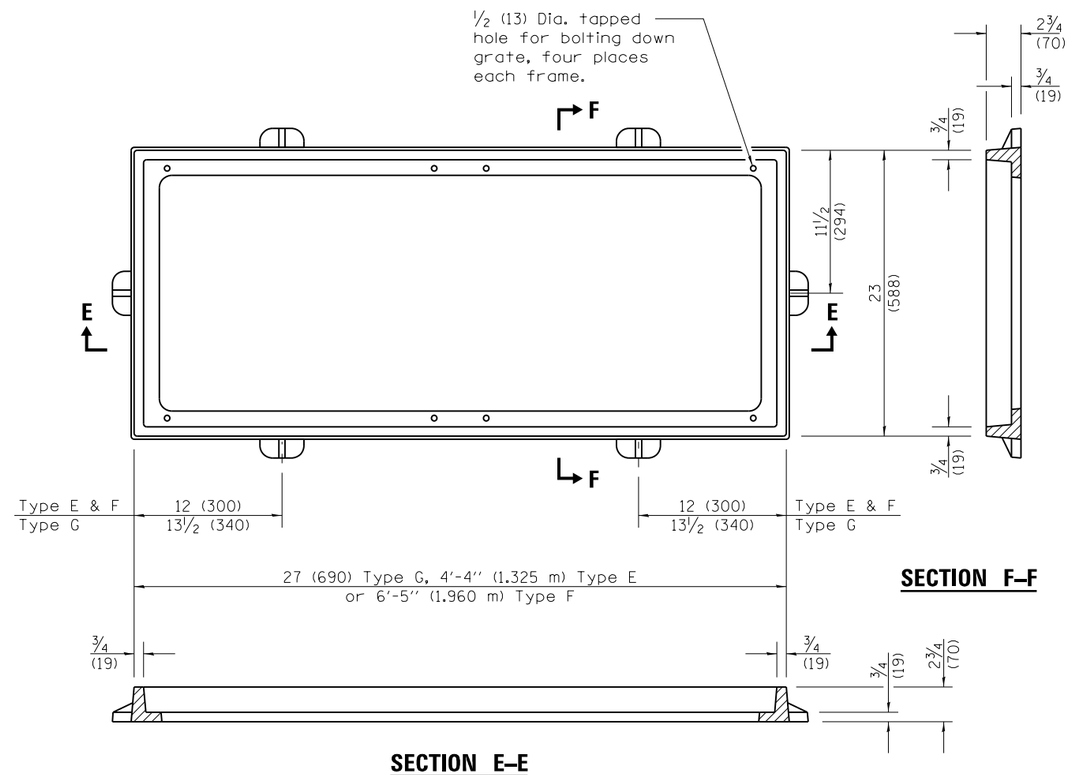


## SECTION F–F

## SECTION E–E

## DETAIL OF CAST FRAME

(Type E shown)

Illinois Department of Transportation

PASSED January 1, 2010
Michael Brand
ENGINEER OF POLICY AND PROCEDURES

APPROVED January 1, 2010
Scott Sobek
ENGINEER OF DESIGN AND ENVIRONMENT

ISSUED 1-1-97

# SHOULDER INLET WITH CURB

(Sheet 2 of 2)

**STANDARD 610001–06**

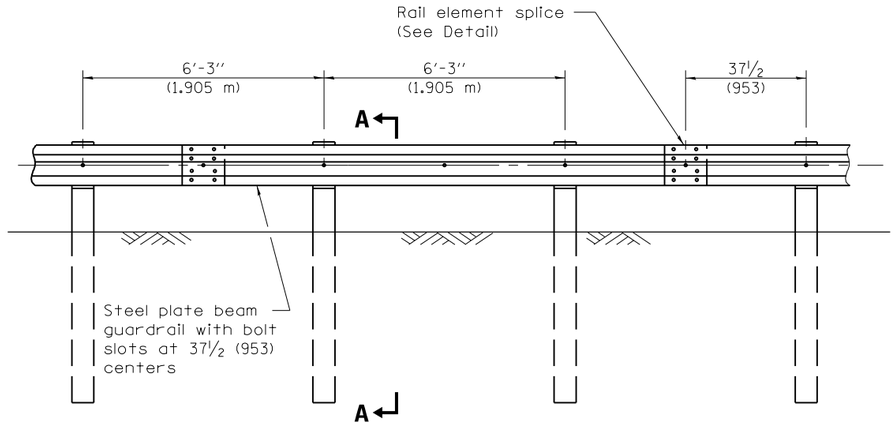


**ELEVATION**

**TYPE A**

6'-3" (1.905 m) Typical post spacing

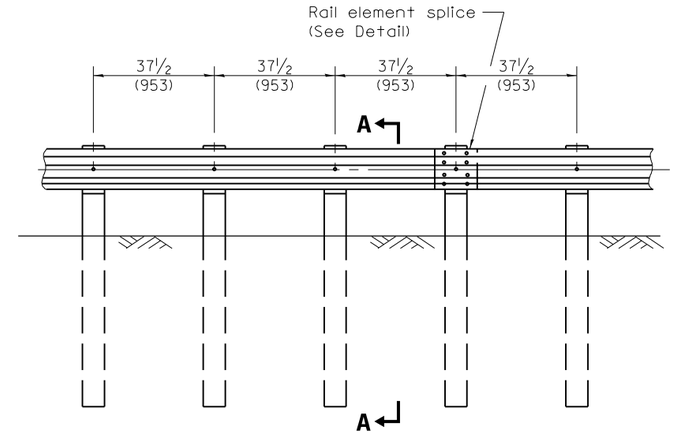


**ELEVATION**

**TYPE B**

37½ (953) Closed post spacing

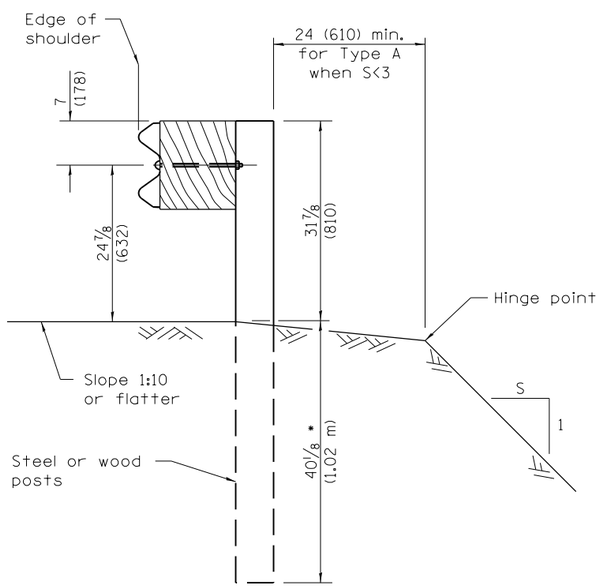


**SECTION A–A**

* When "S" is less than 3 and the distance from the back of post is less than 24 (610), the post shall be steel and the embedment shall be 76⅛ (1934).

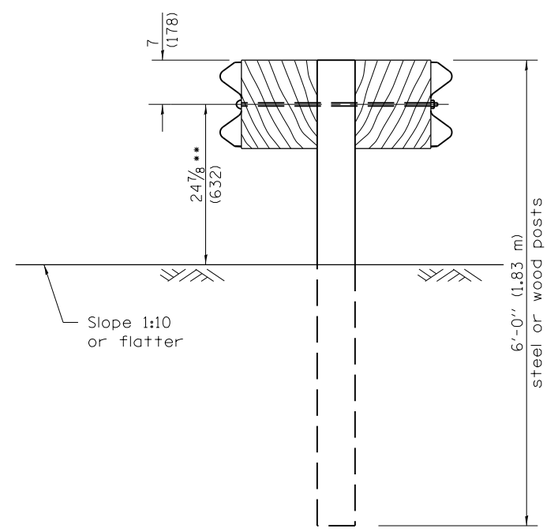


**SECTION B–B**

** When connecting Type D guardrail to an impact attenuator, adjust this dimension to 21⅞ (556) over a distance of 25'-0" (7.62 m) from point of connection.

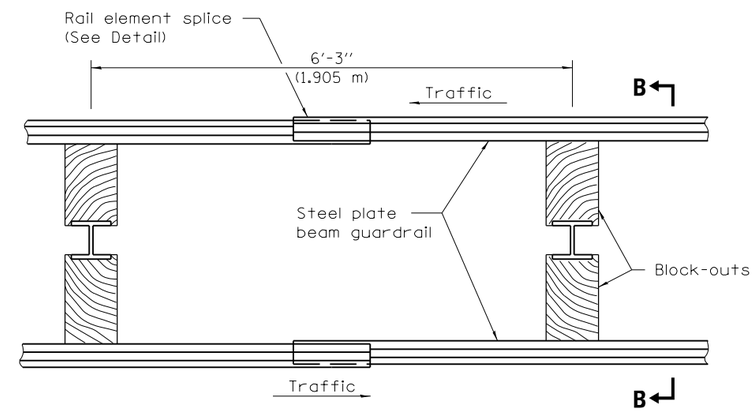


**PLAN**

**TYPE D**

Double steel plate beam guardrail
6'-3" (1.905 m) typical post spacing

## GENERAL NOTES

All slope ratios are expressed as units of vertical displacement to units of horizontal displacement (V:H).

All dimensions are in inches (millimeters) unless otherwise shown.

Illinois Department of Transportation

PASSED January 1, 2012
Michael Brand
ENGINEER OF POLICY AND PROCEDURES

APPROVED January 1, 2012
Scott Essex
ENGINEER OF DESIGN AND ENVIRONMENT

ISSUED 1-1-97

| DATE | REVISIONS |
|---|---|
| 1-1-12 | Added req. for 9 ft. posts |
| | to be steel. Modified set |
| | back of g'rail behind curb. |
| 1-1-11 | Added note to Section B-B |
| | for conn. to impact att. |
| | Revised table on Sheet 4. |

# STEEL PLATE BEAM GUARDRAIL

(Sheet 1 of 4)

**STANDARD 630001–10**

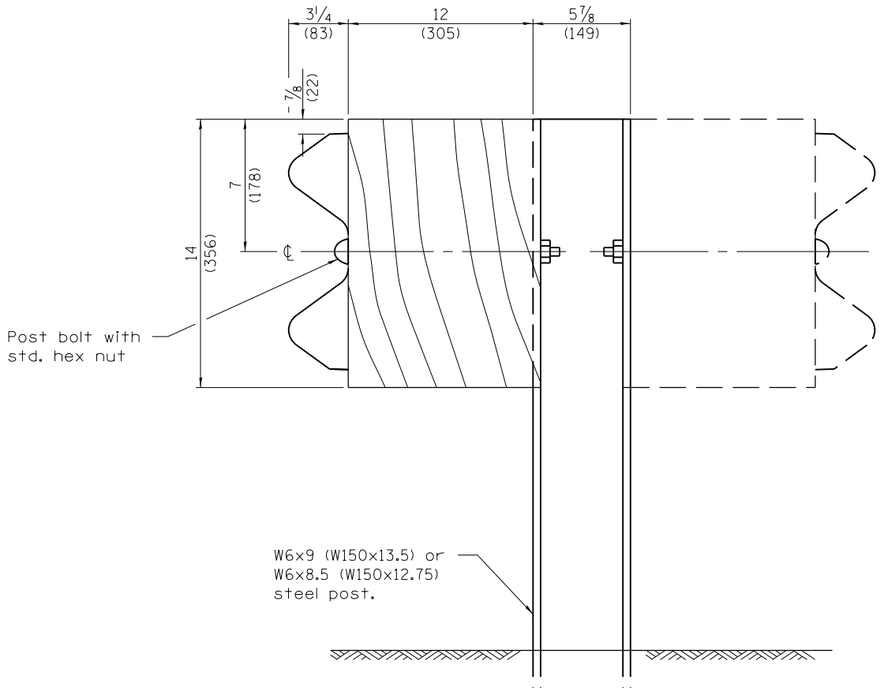


## STEEL POST CONSTRUCTION

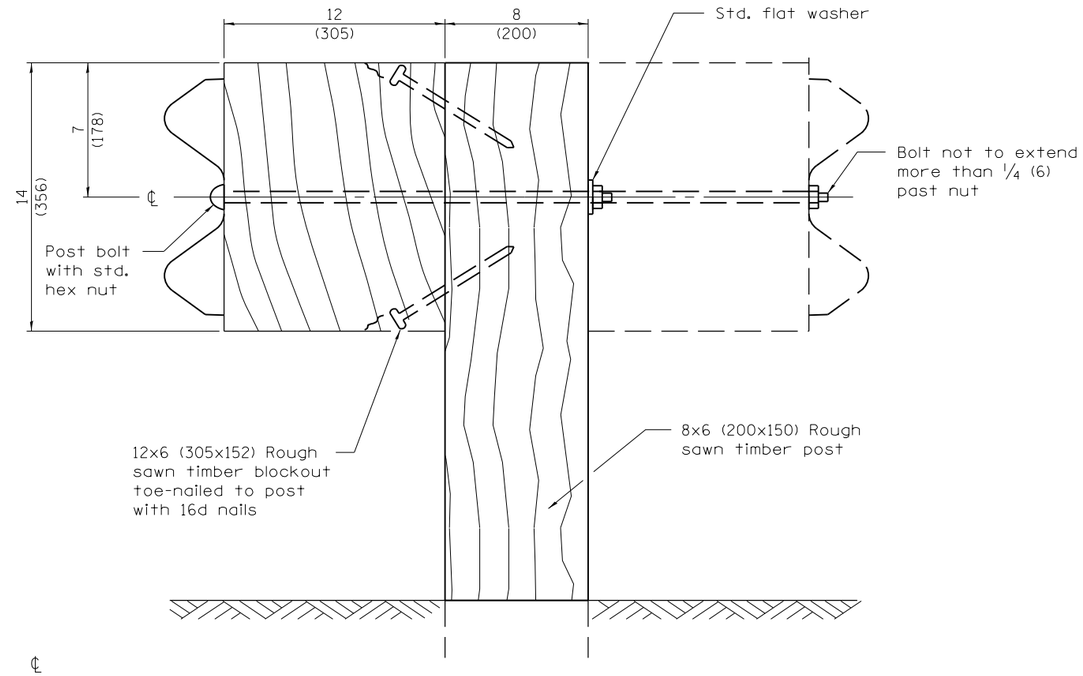


## WOOD POST CONSTRUCTION

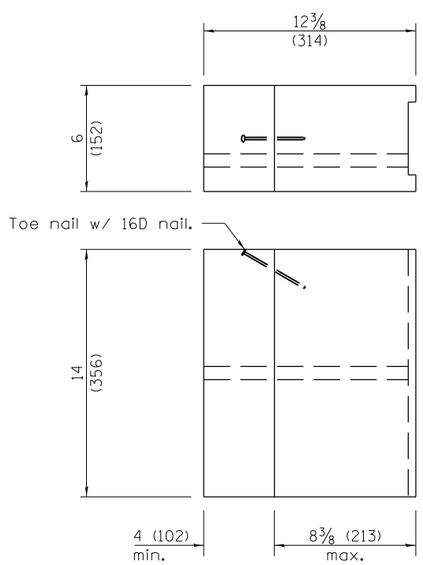


## TWO-PIECE WOOD BLOCKOUT OPTION

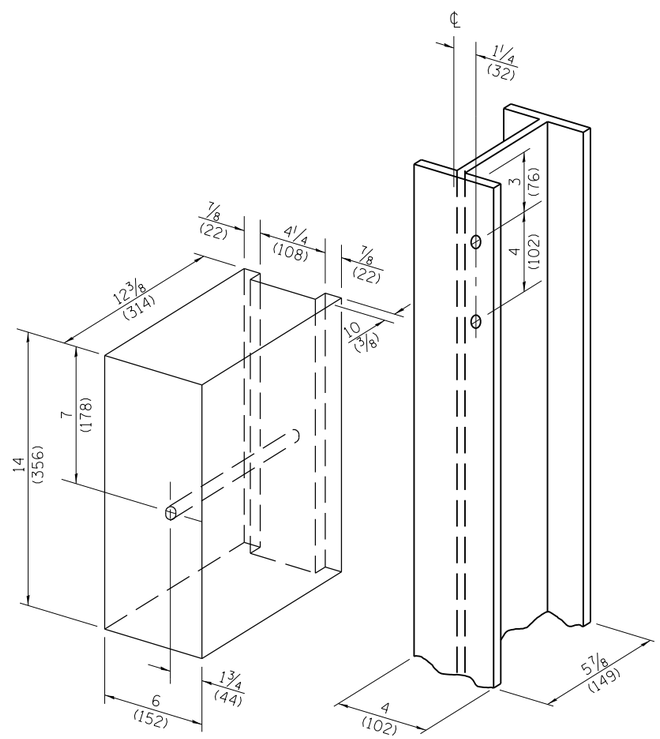


Note:
All holes ¾ (20) dia.

## WOOD BLOCK-OUT AND STEEL POST DETAILS

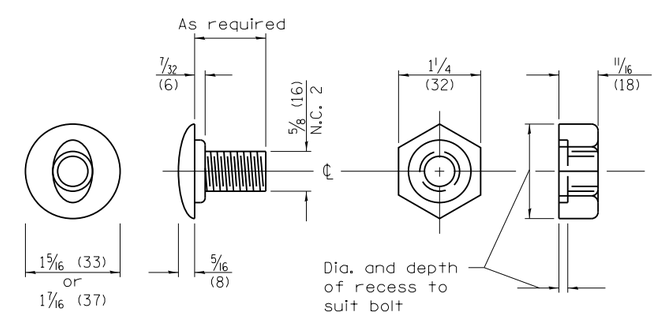


## POST OR SPLICE BOLT & NUT

Illinois Department of Transportation

PASSED January 1, 2012
Michael Brand
ENGINEER OF POLICY AND PROCEDURES
APPROVED January 1, 2012
Scott E. Stokes
ENGINEER OF DESIGN AND ENVIRONMENT

ISSUED 1-1-97

# STEEL PLATE BEAM GUARDRAIL

(Sheet 2 of 4)

**STANDARD 630001-10**

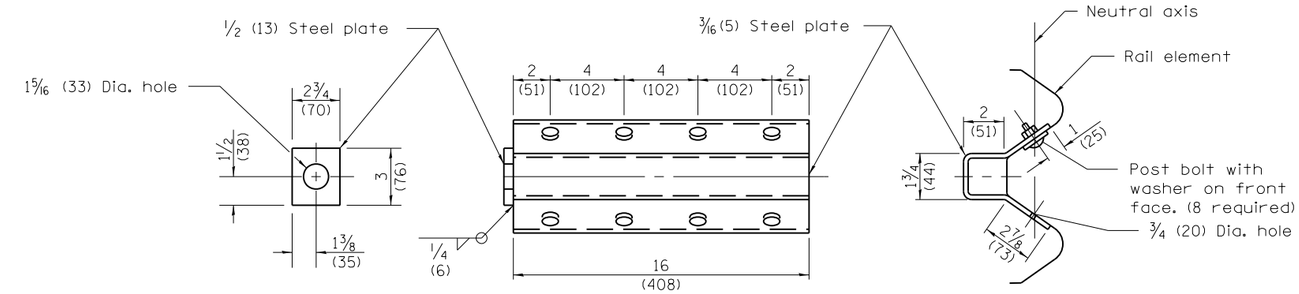


NOTE
Anchor plate T shall be used to attach cable assembly to guardrail when required on traffic barrier terminals.

## ANCHOR PLATE T DETAILS

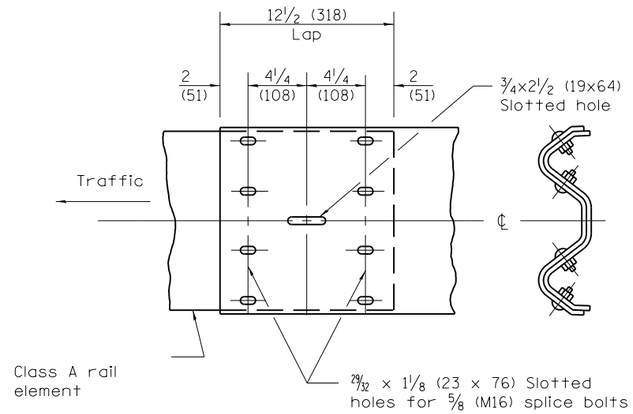


## RAIL ELEMENT SPLICE

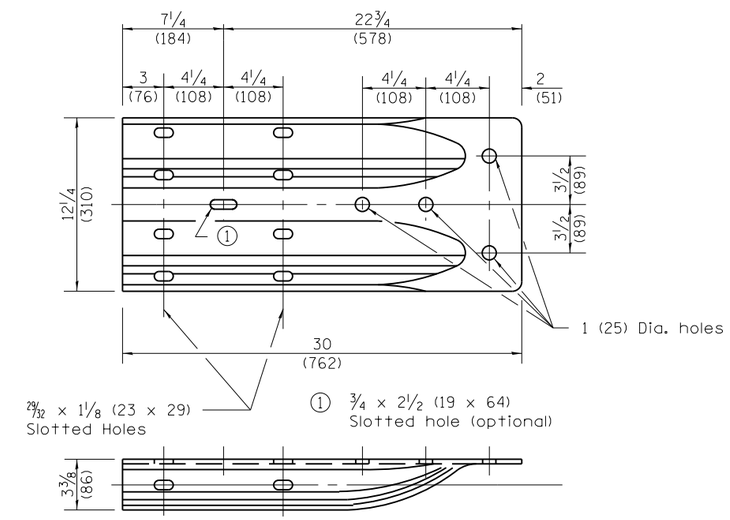


## ALTERNATE END SHOE

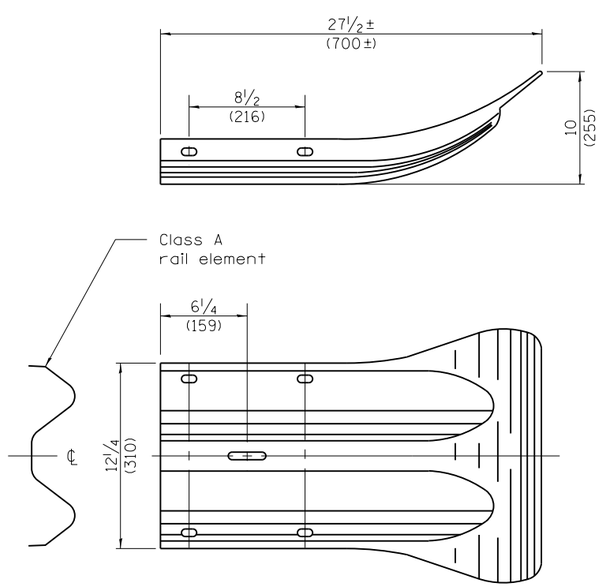


## END SECTION

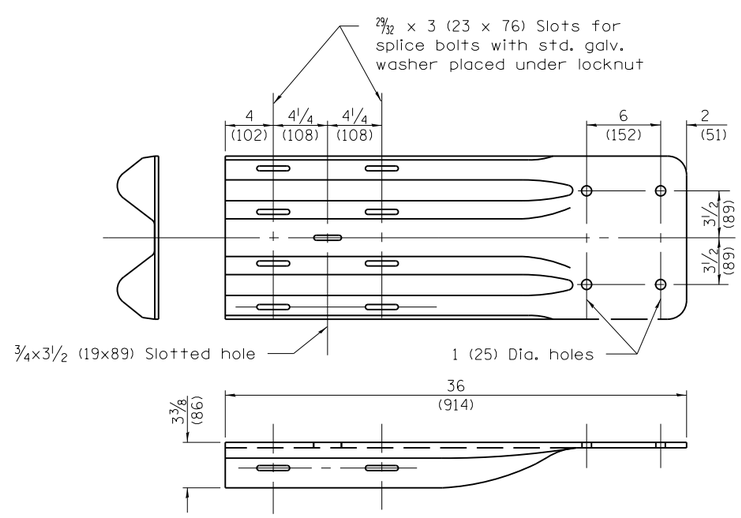


NOTE
When end shoe is attached to a bridge parapet which has an expansion joint, the bolts shall be provided with a locknut or double nut and shall be tightened only to a point that will allow guardrail movement.

The standard end shoe shall be attached to the concrete with pre-drilled or self-drilling anchor bolts. The anchor cone shall be set flush with the surface of the concrete.

Externally threaded studs protruding from the surface of the concrete will not be permitted.

## END SHOE

Illinois Department of Transportation

PASSED January 1, 2012
Michael Brand
ENGINEER OF POLICY AND PROCEDURES

APPROVED January 1, 2012
Scott E. Stokes
ENGINEER OF DESIGN AND ENVIRONMENT

ISSUED 1-1-97

# STEEL PLATE BEAM GUARDRAIL

(Sheet 3 of 4)

STANDARD 630001–10

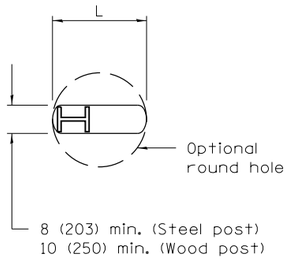


**PLAN**

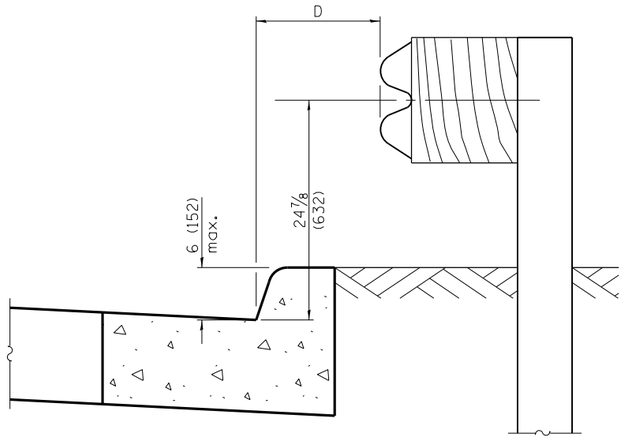


**0 ≤ D < 4'–0" (1.2 m)**

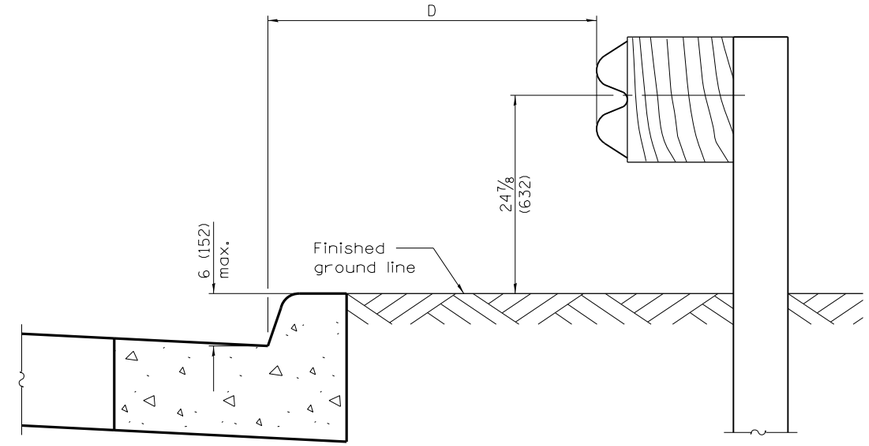


**4'–0" (1.2 m) ≤ D ≤ 12'–0" (3.7 m)**

**GUARDRAIL PLACED BEHIND CURB**

Note: 'D' shall not exceed 6 (152) for design speeds greater than 45 mph.

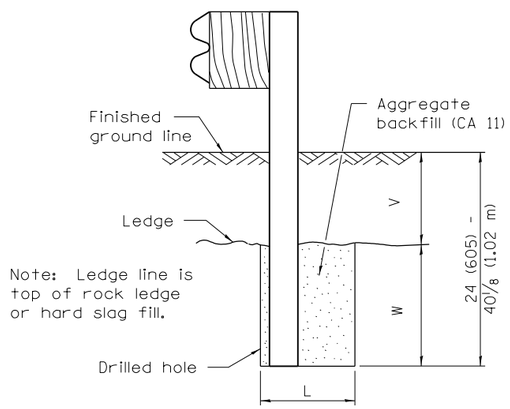


**ELEVATION**

**FOOTING FOR POST WHEN IMPERVIOUS MATERIAL IS ENCOUNTERED**

| V | W | L | |
|---|---|---|---|
| | | Steel Post | Wood Post |
| 0 - 6<br>(0 - 152) | 24<br>(610) | 21<br>(530) | 23<br>(580) |
| > 6 - 18<br>(> 152 - 458) | 18<br>(458) | 14 1/2<br>(368) | 16 1/2<br>(419) |
| > 18 - 31<br>(> 458 - 787) | 12<br>(305) | 8<br>(203) | 10<br>(250) |
| > 31 - 40 1/8<br>(> 787 - 1.02 m) | 12 - 0<br>(305 - 0) | 8<br>(203) | 10<br>(250) |

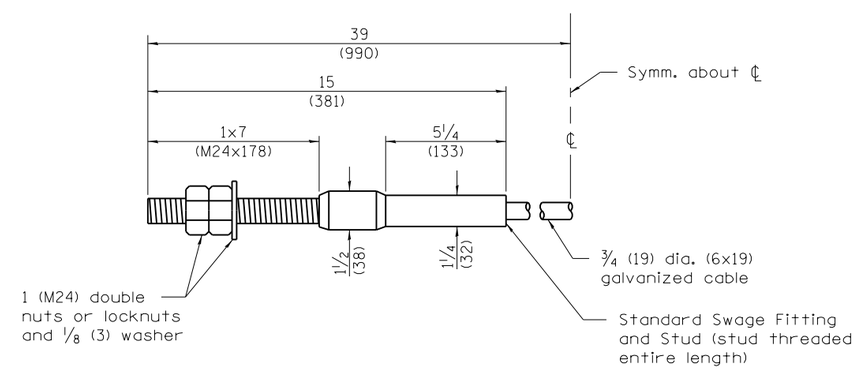


**CABLE ASSEMBLY**

(40,000 lbs. (18,100 kg) min. breaking strength)
Tighten to taut tension.

Illinois Department of Transportation

PASSED January 1, 2012
Michael Brand
ENGINEER OF POLICY AND PROCEDURES
APPROVED January 1, 2012
ENGINEER OF DESIGN AND ENVIRONMENT

ISSUED 1-1-97

# STEEL PLATE BEAM GUARDRAIL

(Sheet 4 of 4)

**STANDARD 630001–10**

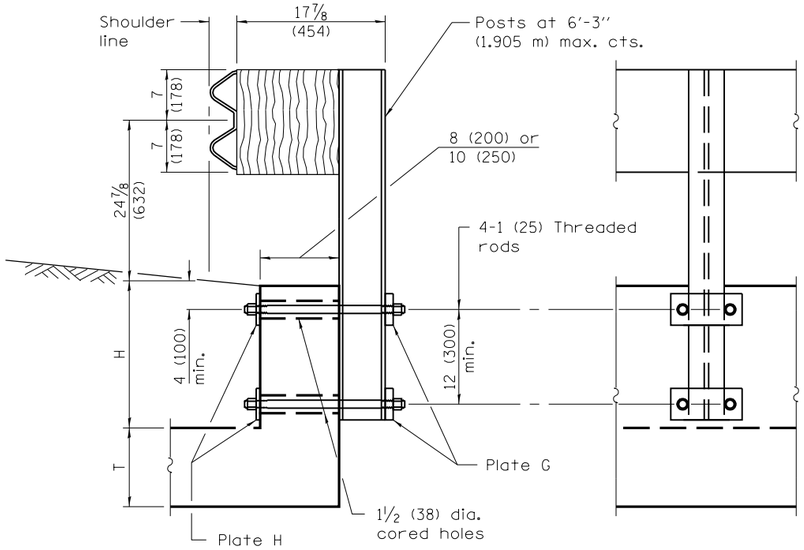


**CROSS SECTION** **ELEVATION**

**CONDITION H > 18 (450)**

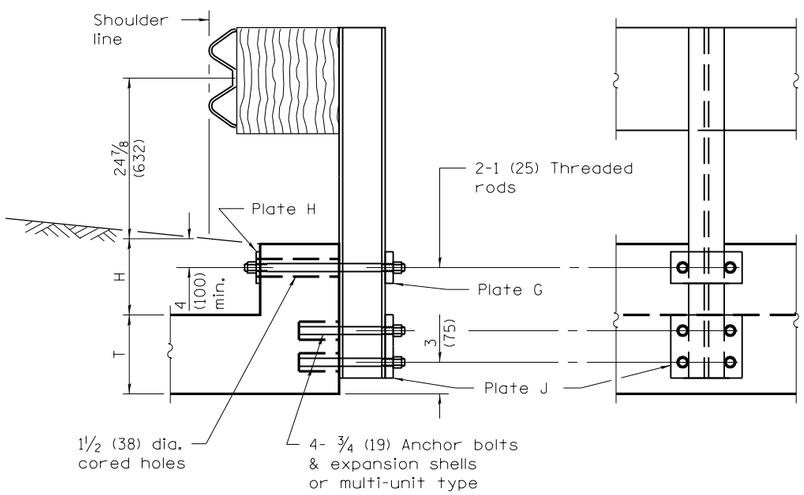


**CROSS SECTION** **ELEVATION**

**CONDITION H < 18 (450) & H+T ≥ 20 (510)**

**CASE I**
**MOUNTED ON**
**RAISED HEADWALL**

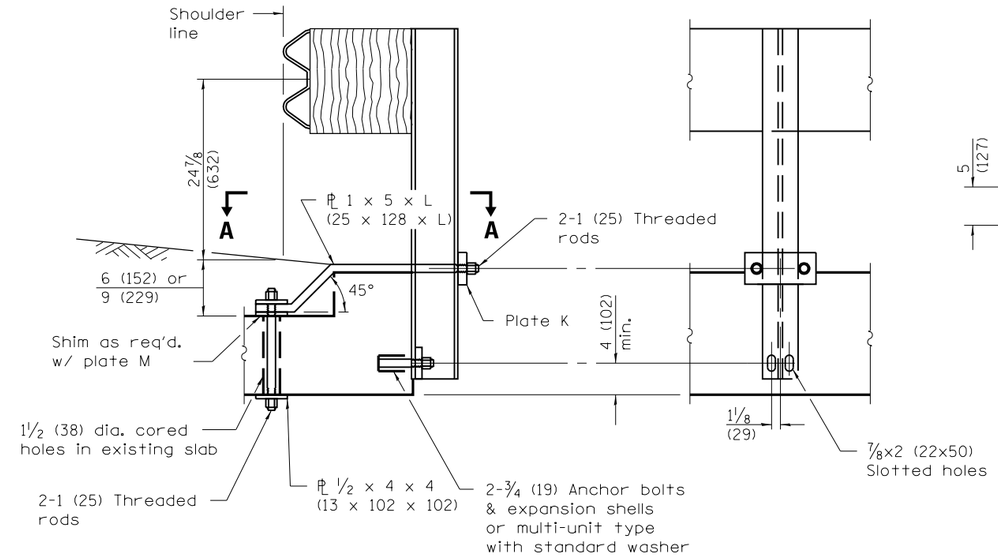


**CROSS SECTION** **ELEVATION**

**CASE II**
**MOUNTED ON TOP HEADWALL**
**WITH SQUARE TIP**

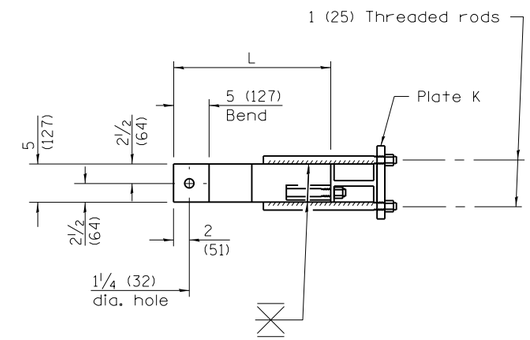


**SECTION A–A**

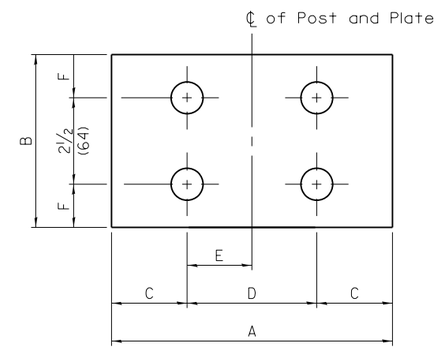


**PLATE J**

| PLATE DIMENSIONS | | | | | | | | |
|---|---|---|---|---|---|---|---|---|
| Type | A | B | C | D | E | F | Hole Dia. | Thick-ness |
| G | 9 (230) | 4 (100) | 1½ (40) | 6 (150) | 3 (75) | 2 (50) | 1⅛ (29) | 1 (25) |
| H | 9 (230) | 4 (100) | 1½ (40) | 6 (150) | 3 (75) | 2 (50) | 1⅛ (29) | ½ (13) |
| J | 9 (230) | 5 (127) | 1½ (40) | 6 (150) | 3 (75) | 1¼ (32) | ⅞ (22) | 1 (25) |
| K | 9 (230) | 4 (100) | 1½ (40) | 6 (150) | 3 (75) | 2 (50) | 1⅛ (29) | 1¼ (32) |
| M | 4 (100) | 4 (100) | 2 (50) | N/A | N/A | 2 (50) | 1¼ (32) | ½ (13) |

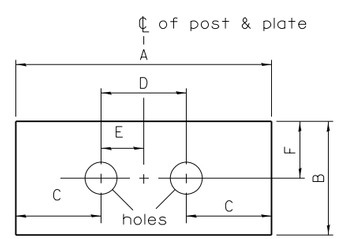


**PLATES G, H & K**

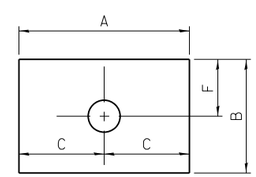


**PLATE M**

## GENERAL NOTES

Except as noted, dimensions and notes specified for cases II, III, and IV are the same as specified for case I.

For details of guardrail elements not shown, see Standard 630001.

All threaded rods shall be installed with heavy hex nuts and standard washers.

All dimensions are in inches (millimeters) unless otherwise shown.

Illinois Department of Transportation

PASSED January 1, 2011
Michael Briand
ENGINEER OF POLICY AND PROCEDURES
APPROVED January 1, 2011
ENGINEER OF DESIGN AND ENVIRONMENT

ISSUED 1-1-97

| DATE | REVISIONS |
|---|---|
| 1-1-11 | Revised weld detail |
| | for Case IV. |
| | |
| 1-1-09 | Switched units to |
| | English (metric). Added |
| | fillet weld to Case IV. |

# GUARDRAIL MOUNTED ON EXISTING CULVERTS

(Sheet 1 of 2)

**STANDARD 630101–09**

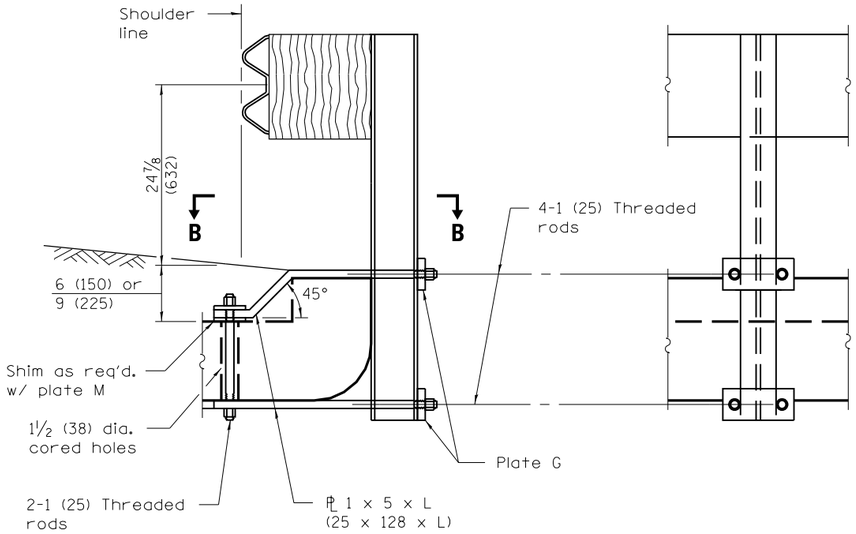


**CROSS SECTION**

**ELEVATION**

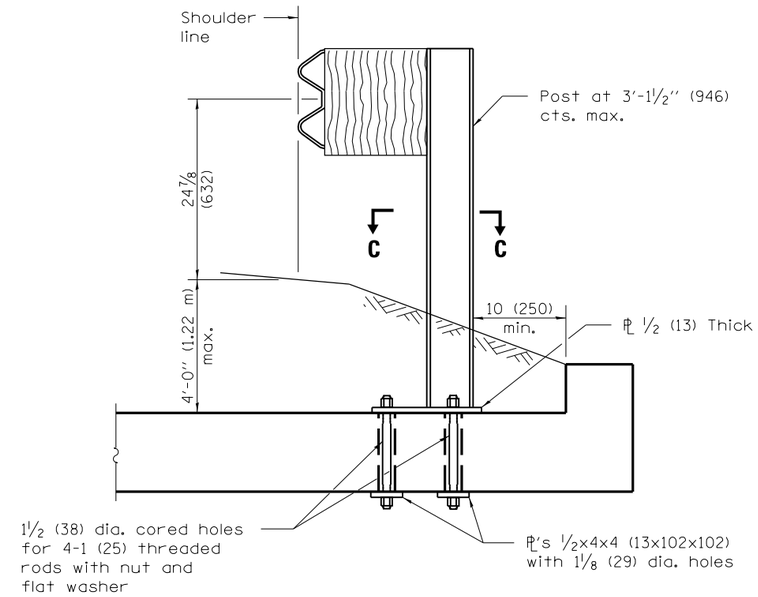


**CROSS SECTION**

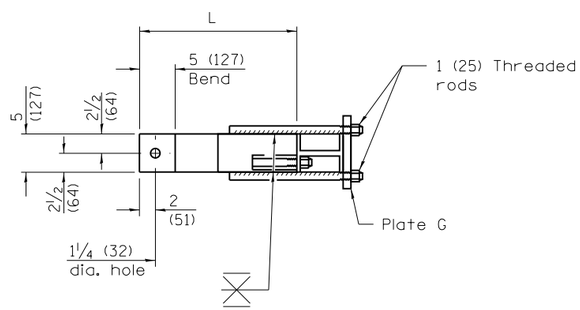


**SECTION B–B**

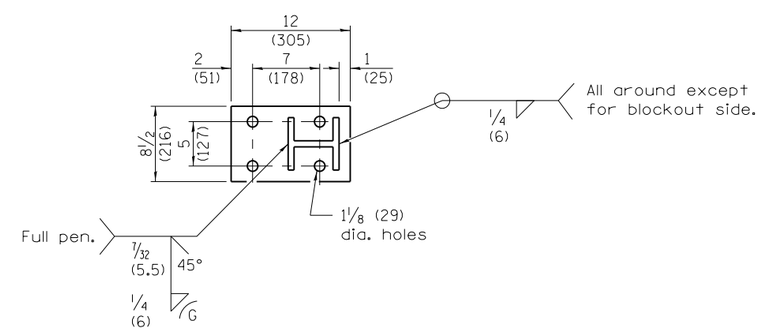


**SECTION C–C**

**CASE III**
**MOUNTED ON HEADWALL**
**WITH CURVED OR DEMOLISHED TIP**

**CASE IV**
**MOUNTED ON SLAB**

Illinois Department of Transportation

PASSED January 1, 2011
Michael Brand
ENGINEER OF POLICY AND PROCEDURES
APPROVED January 1, 2011
ENGINEER OF DESIGN AND ENVIRONMENT

ISSUED 1-1-97

# GUARDRAIL MOUNTED ON EXISTING CULVERTS

(Sheet 2 of 2)

**STANDARD 630101–09**

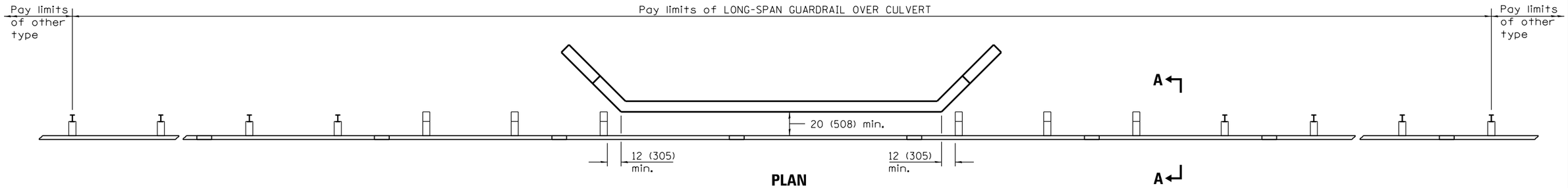


**PLAN**

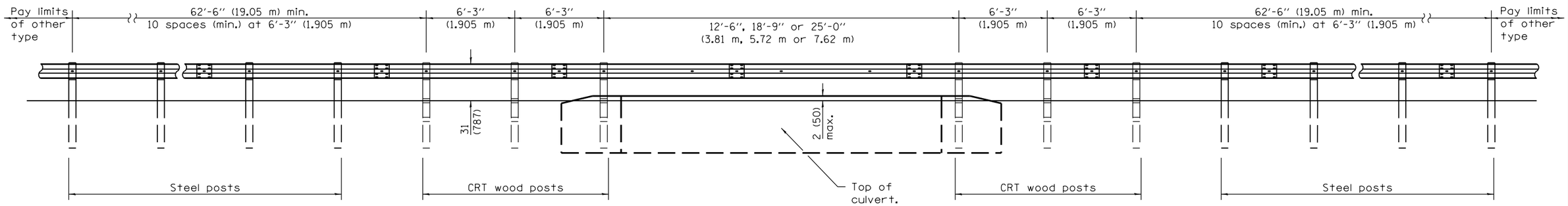


**ELEVATION**

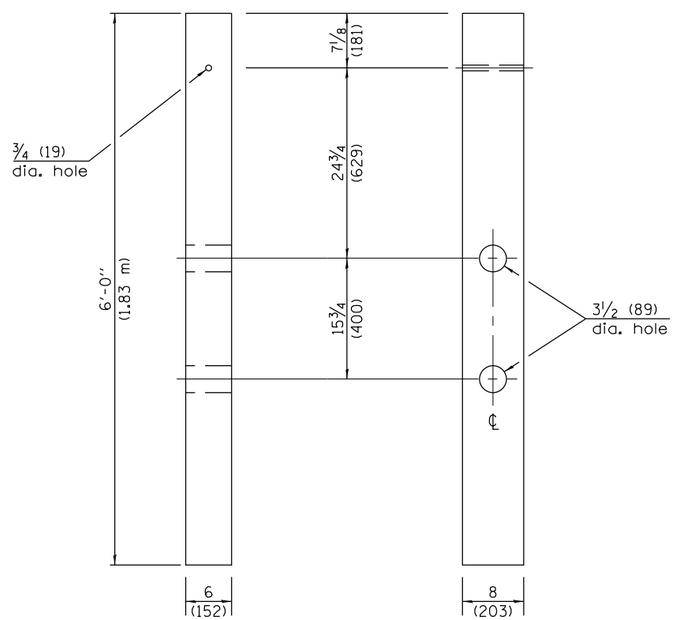


**FRONT** **SIDE**

**CRT WOOD POST**

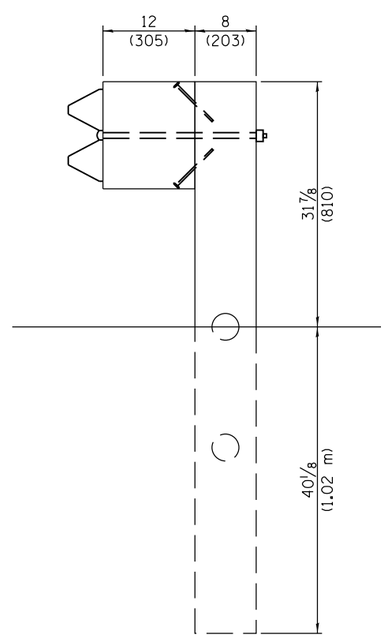


**SECTION A–A**

## GENERAL NOTES

See Standard 630001 for details of guardrail not shown.

All dimensions are in inches (millimeters) unless otherwise shown.

Illinois Department of Transportation

PASSED January 1, 2013
Michael Brand
ENGINEER OF POLICY AND PROCEDURES
APPROVED January 1, 2013
ENGINEER OF DESIGN AND ENVIRONMENT

ISSUED 1-1-11

| DATE | REVISIONS |
|---|---|
| 1-1-13 | Added min. dim. from guard- |
| | rail to headwall. Added dim. |
| | to section A-A. |
| 1-1-11 | New standard. |
| | |
| | |

# LONG–SPAN GUARDRAIL OVER CULVERT

**STANDARD 630106–01**

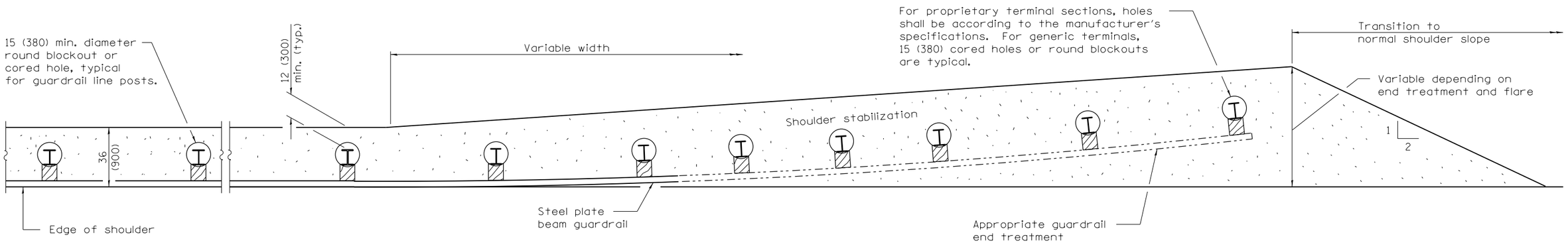


**PLAN**

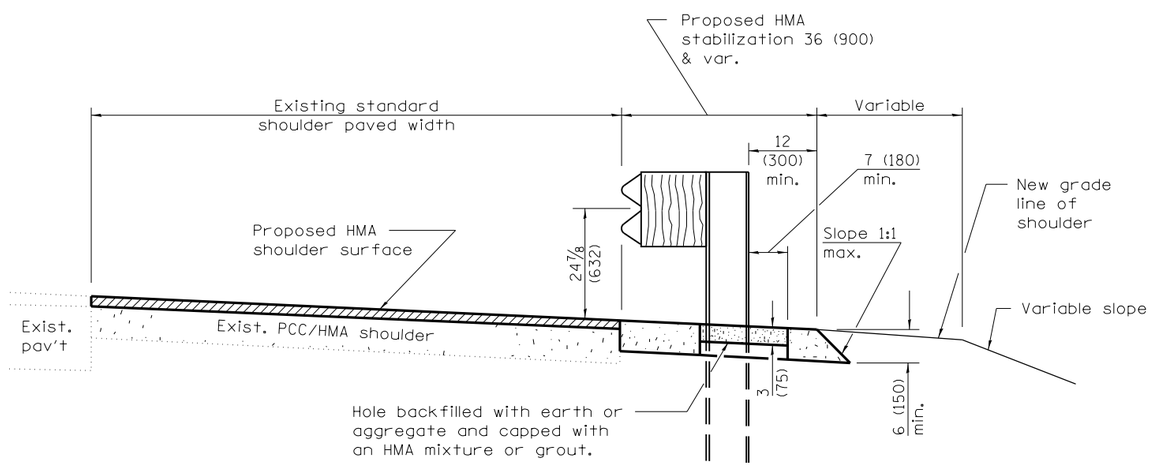


**RESURFACING**

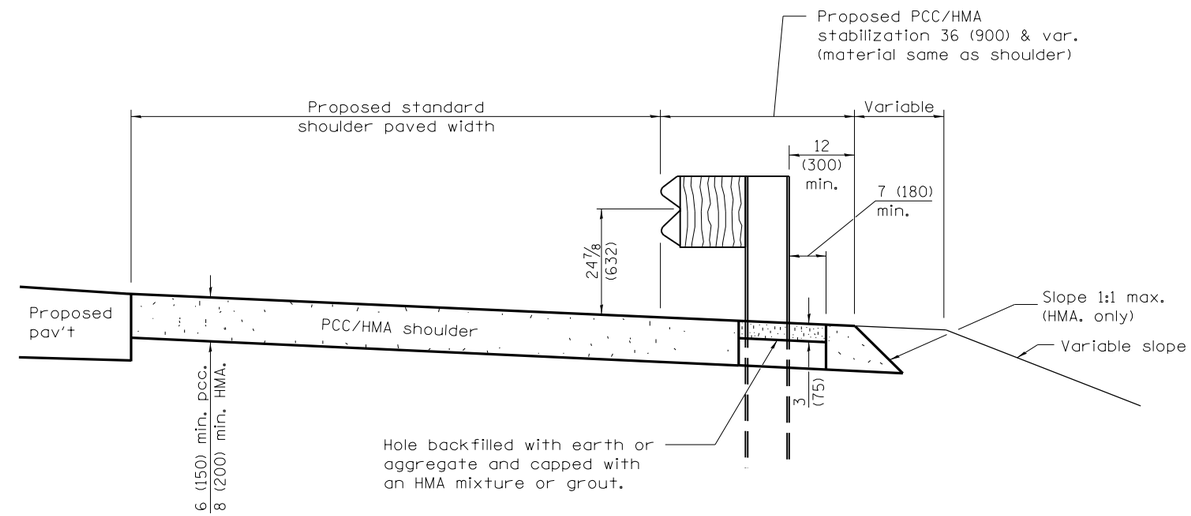


**NEW CONSTRUCTION**

## GENERAL NOTES

See Standard 482001, 482006, or 483001 for details not shown.

All dimensions are in inches (millimeters) unless otherwise shown.

Illinois Department of Transportation

PASSED January 1, 2009
ENGINEER OF POLICY AND PROCEDURES
APPROVED January 1, 2009
ENGINEER OF DESIGN AND ENVIRONMENT

ISSUED 1-1-97

| DATE | REVISIONS |
|---|---|
| 1-1-09 | Switched units to |
| | English (metric). |
| | |
| 1-1-08 | Removed reference to |
| | "bituminous mixture or |
| | grout". |

# PCC / HMA STABILIZATION AT STEEL PLATE BEAM GUARDRAIL

**STANDARD 630201–06**

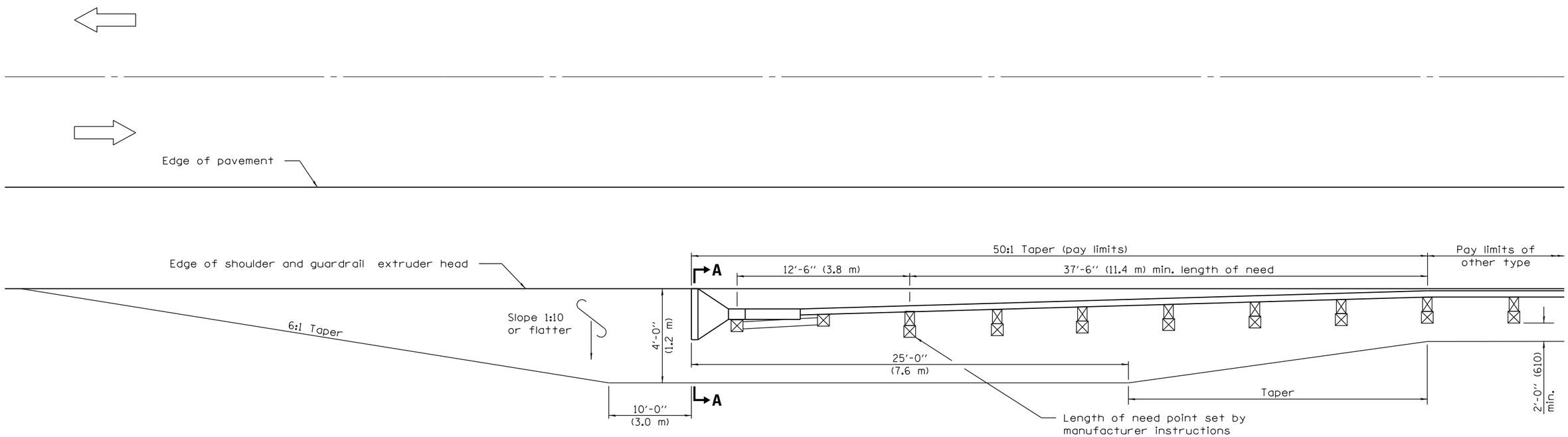


## SHOULDER WIDENING TRANSITION FOR TANGENT TERMINAL

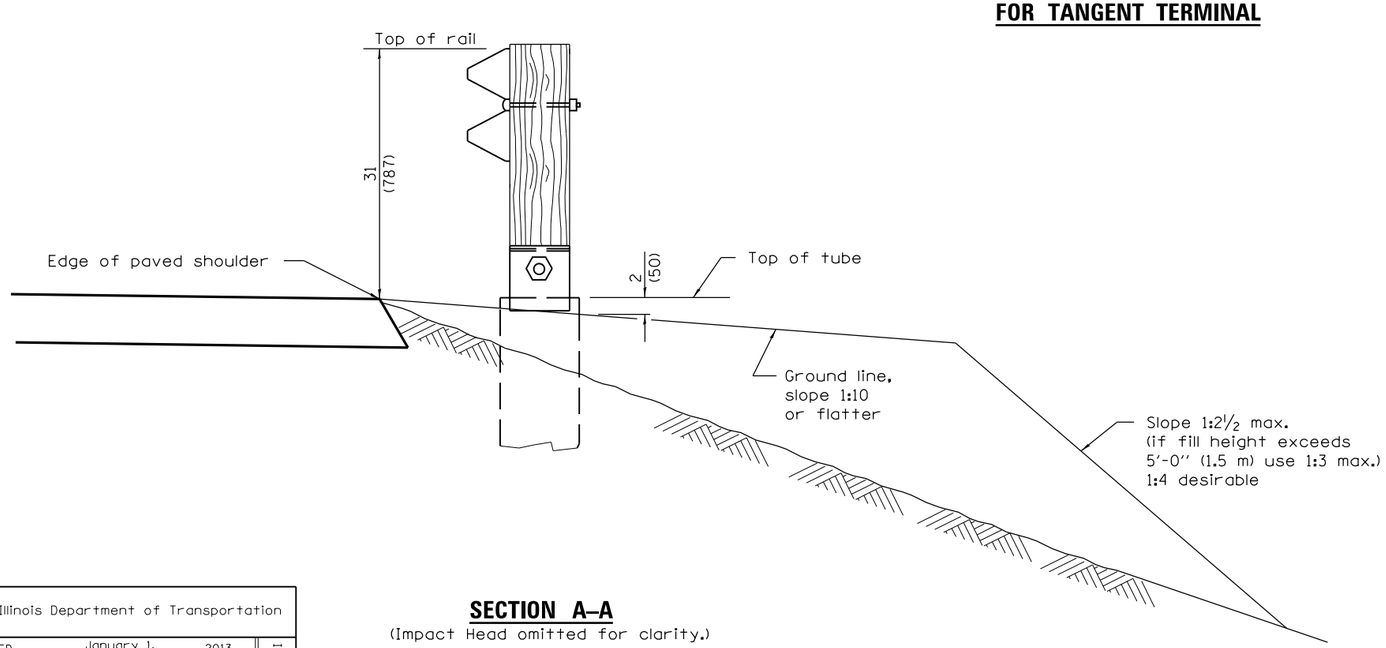


## SECTION A–A

(Impact Head omitted for clarity.)

## GENERAL NOTES

50:1 Taper required so the guardrail head will not encroach on the shoulder.

All slope ratios are expressed as units of vertical displacement to units of horizontal displacement (V:H).

All dimensions are in inches (millimeters) unless otherwise shown.

Illinois Department of Transportation

PASSED January 1, 2013
Michael Brand
ENGINEER OF POLICY AND PROCEDURES

APPROVED January 1, 2013
ENGINEER OF DESIGN AND ENVIRONMENT

ISSUED 1-1-00

| DATE | REVISIONS |
|---|---|
| 1-1-13 | Modified dimensioning of terminal. |
| 1-1-09 | Switched units to English (metric). |

# SHOULDER WIDENING FOR TYPE 1 (SPECIAL) GUARDRAIL TERMINALS

(Sheet 1 of 2)

STANDARD 630301–06

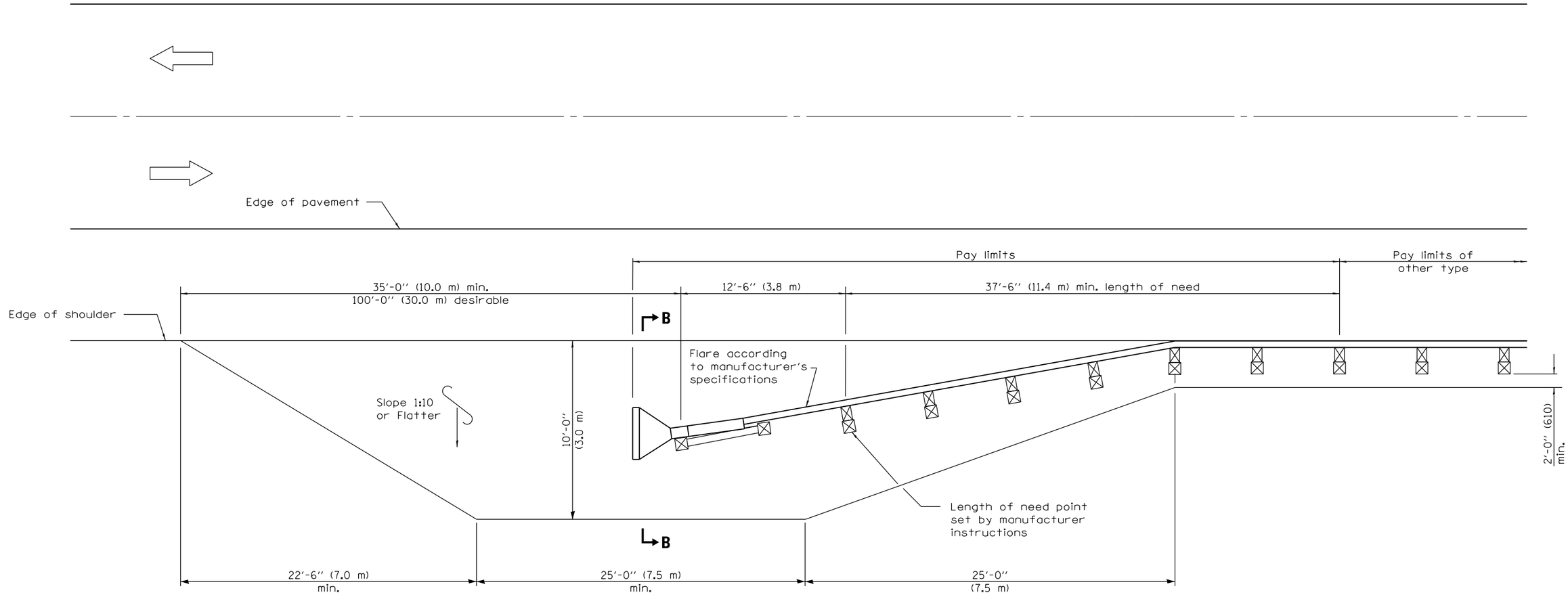


**SHOULDER WIDENING TRANSITION FOR FLARED TERMINAL**

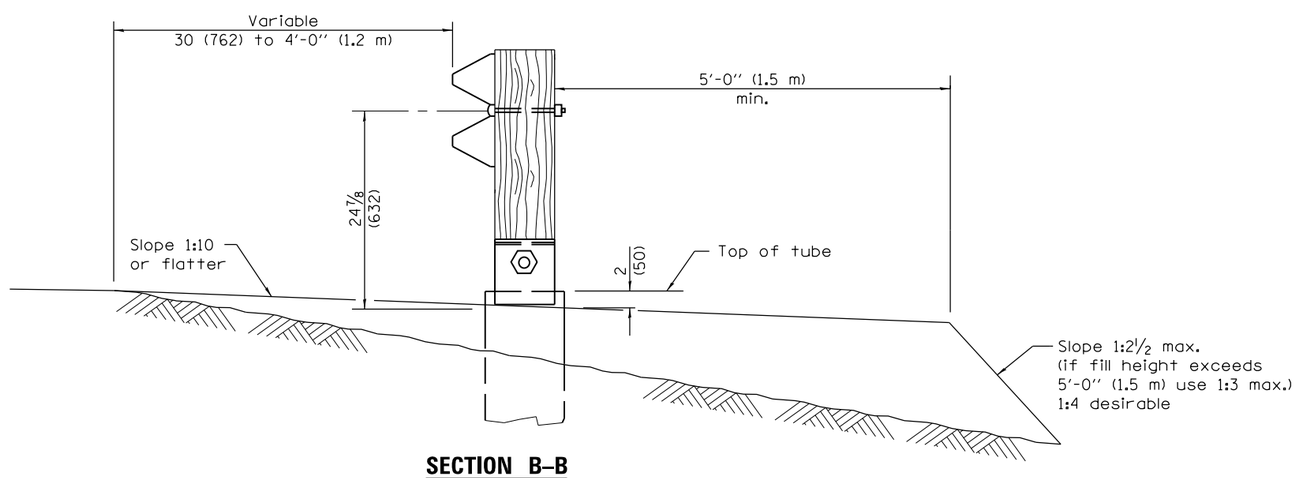


**SECTION B–B**

(Impact Head omitted for clarity.)

Illinois Department of Transportation

PASSED January 1. 2013

ENGINEER OF POLICY AND PROCEDURES

APPROVED January 1. 2013

ENGINEER OF DESIGN AND ENVIRONMENT

ISSUED 1-1-00

# SHOULDER WIDENING FOR TYPE 1 (SPECIAL) GUARDRAIL TERMINALS

(Sheet 2 of 2)

**STANDARD 630301–06**

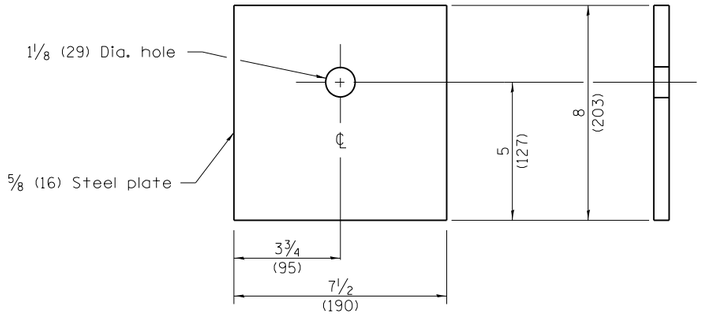


**BEARING PLATE K**

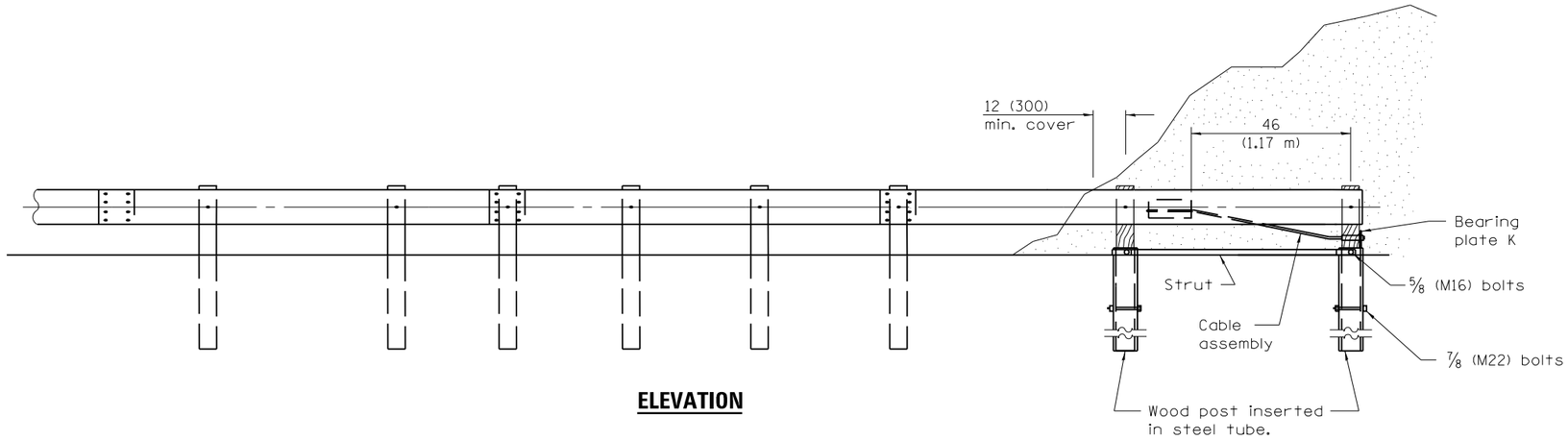


**ELEVATION**

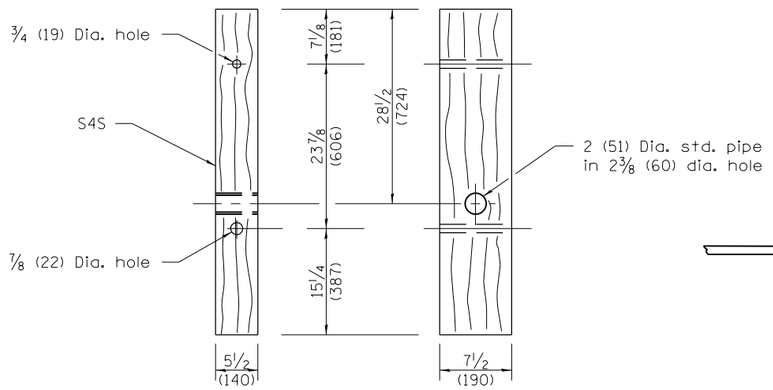


**FRONT** **SIDE**

**WOOD POST**

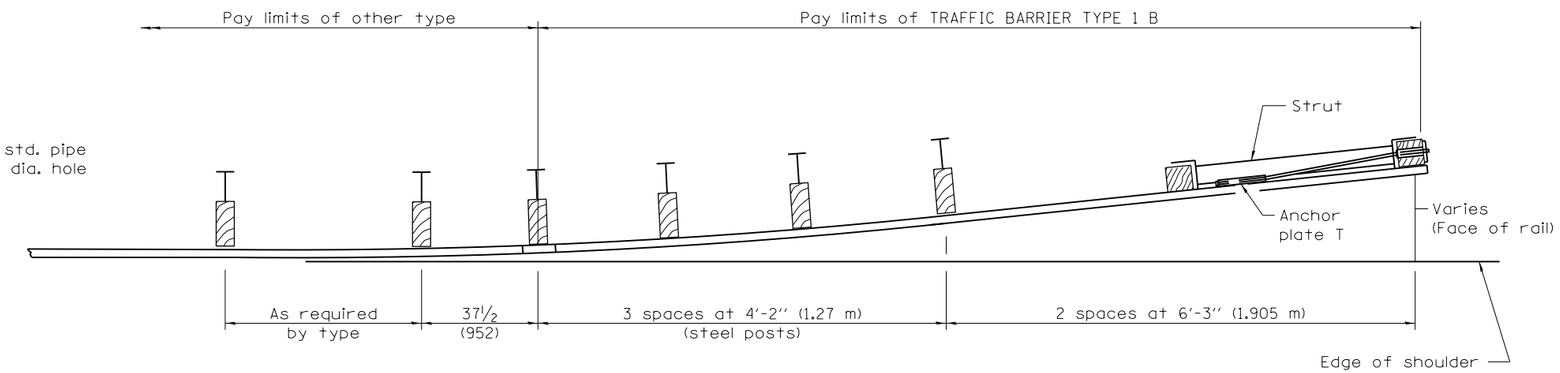


**PLAN**

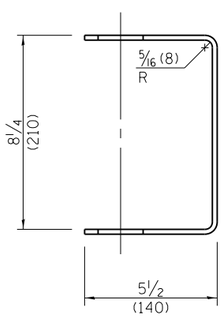


**YOKE**

3/16 (5) thick steel

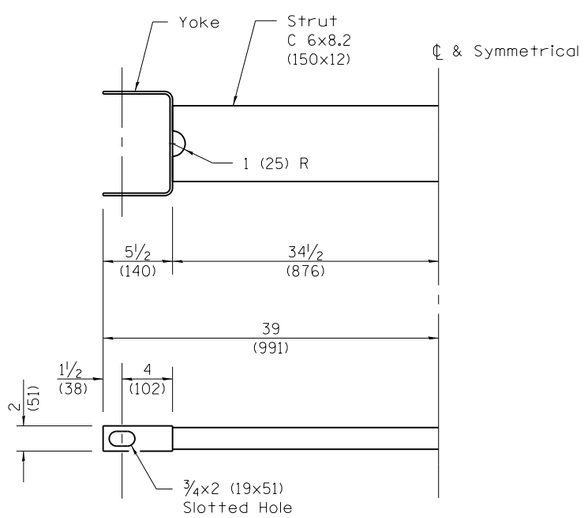


**CABLE STRUT**

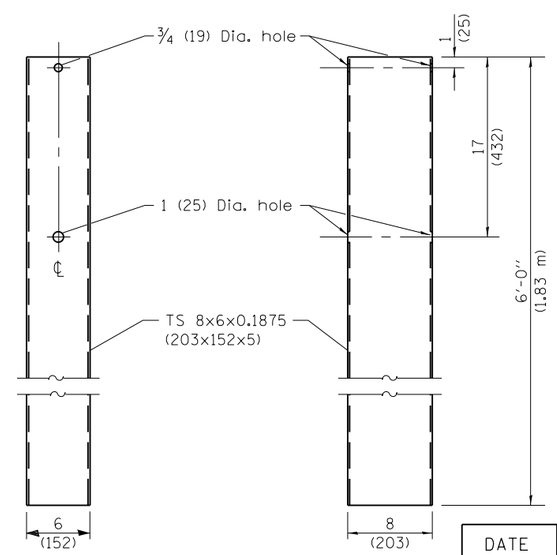


**FRONT** **SIDE**

**STEEL TUBE**

## GENERAL NOTES

See Standard 630001 for details of guardrail not shown.

The bearing plate K shall be held in position by two eight penny nails driven into the post and bent over the top of the plate.

All dimensions are in inches (millimeters) unless otherwise shown.

Illinois Department of Transportation

PASSED January 1, 2011
Michael Brand
ENGINEER OF POLICY AND PROCEDURES

APPROVED January 1, 2011
ENGINEER OF DESIGN AND ENVIRONMENT

ISSUED 1-1-97

| DATE | REVISIONS |
|---|---|
| 1-1-11 | Revised steel tube |
| | length to 6'-0" (1.83 m). |
| | |
| 1-1-10 | Increased steel tube |
| | length, corrected hole |
| | locations in tube. |

# TRAFFIC BARRIER TERMINAL, TYPE 1B

**STANDARD 631006–08**

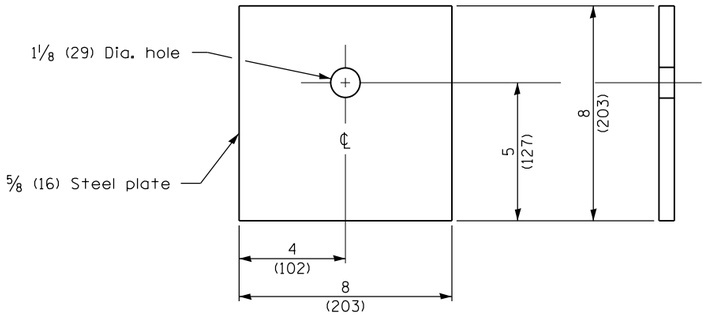


## BEARING PLATE K

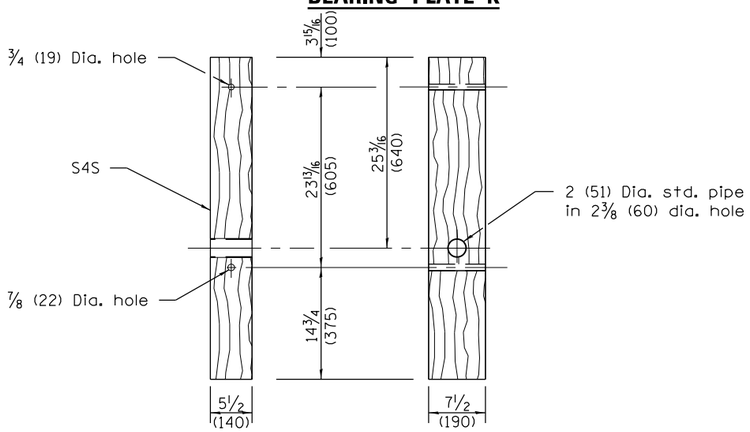


**FRONT** **SIDE**

## WOOD POST

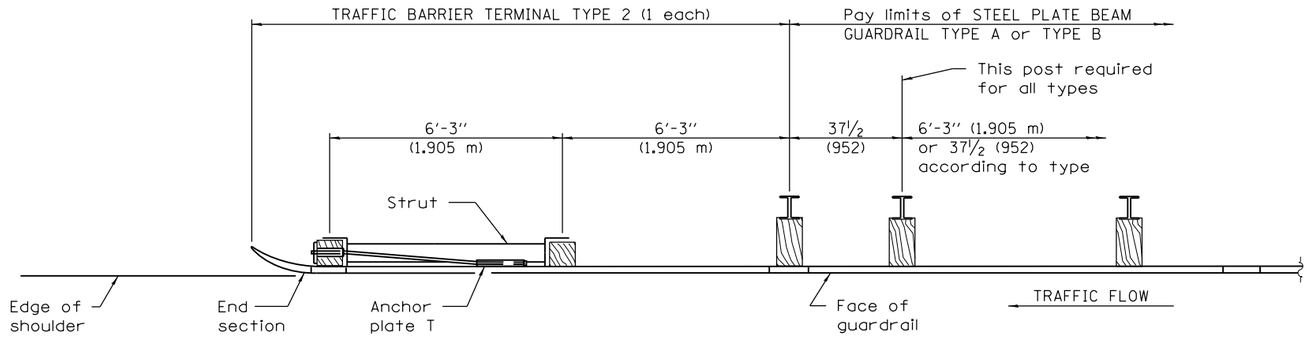


## PLAN

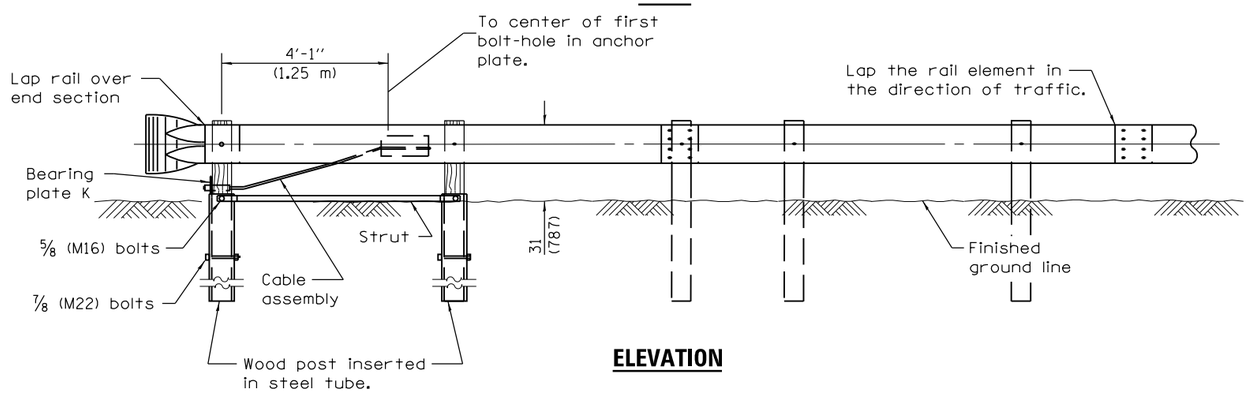


## ELEVATION

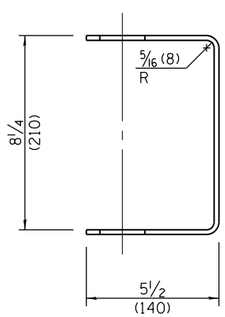


## YOKE

3/16 (5) thick steel

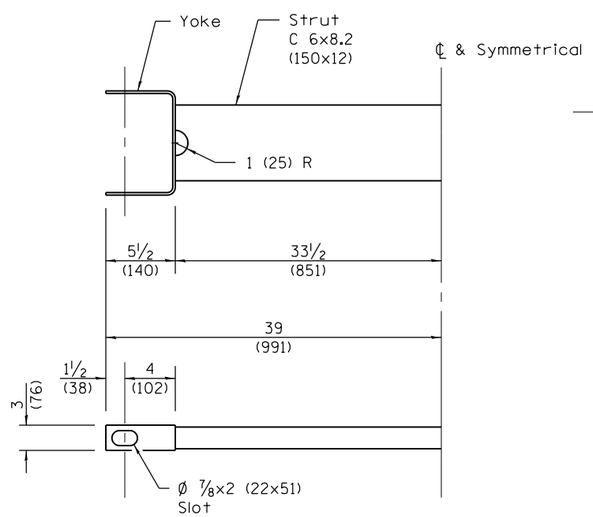


## CABLE STRUT

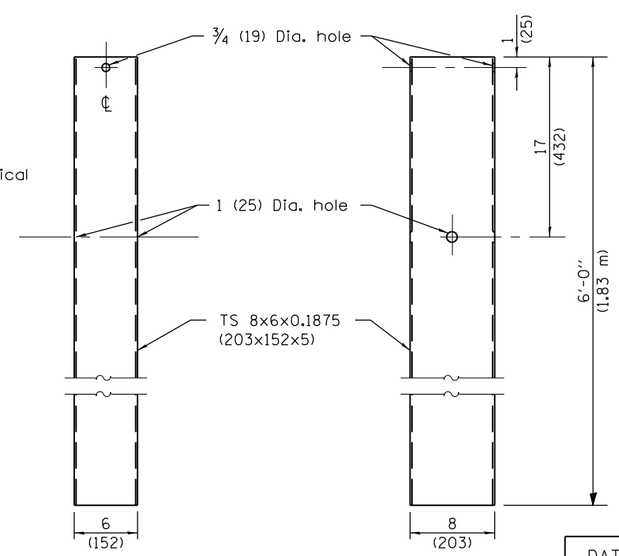


**FRONT** **SIDE**

## STEEL TUBE

## GENERAL NOTES

See Standard 630001 for details of guardrail not shown.

The bearing plate K shall be held in position by two eight penny nails driven into the post and bent over the top of the plate.

All dimensions are in inches (millimeters) unless otherwise shown.

Illinois Department of Transportation

PASSED January 1, 2013
Michael Brand
ENGINEER OF POLICY AND PROCEDURES
APPROVED January 1, 2013
ENGINEER OF DESIGN AND ENVIRONMENT

ISSUED 1-1-97

| DATE | REVISIONS |
|---|---|
| 1-1-13 | Corrected metric dimension |
| | for BEARING PLATE K. Changed |
| | pipe dia. in wood post. |
| 1-1-12 | Revised dimensions for post, |
| | bearing plate, cable strut, |
| | tube and cable connection. |

# TRAFFIC BARRIER TERMINAL, TYPE 2

**STANDARD 631011–09**

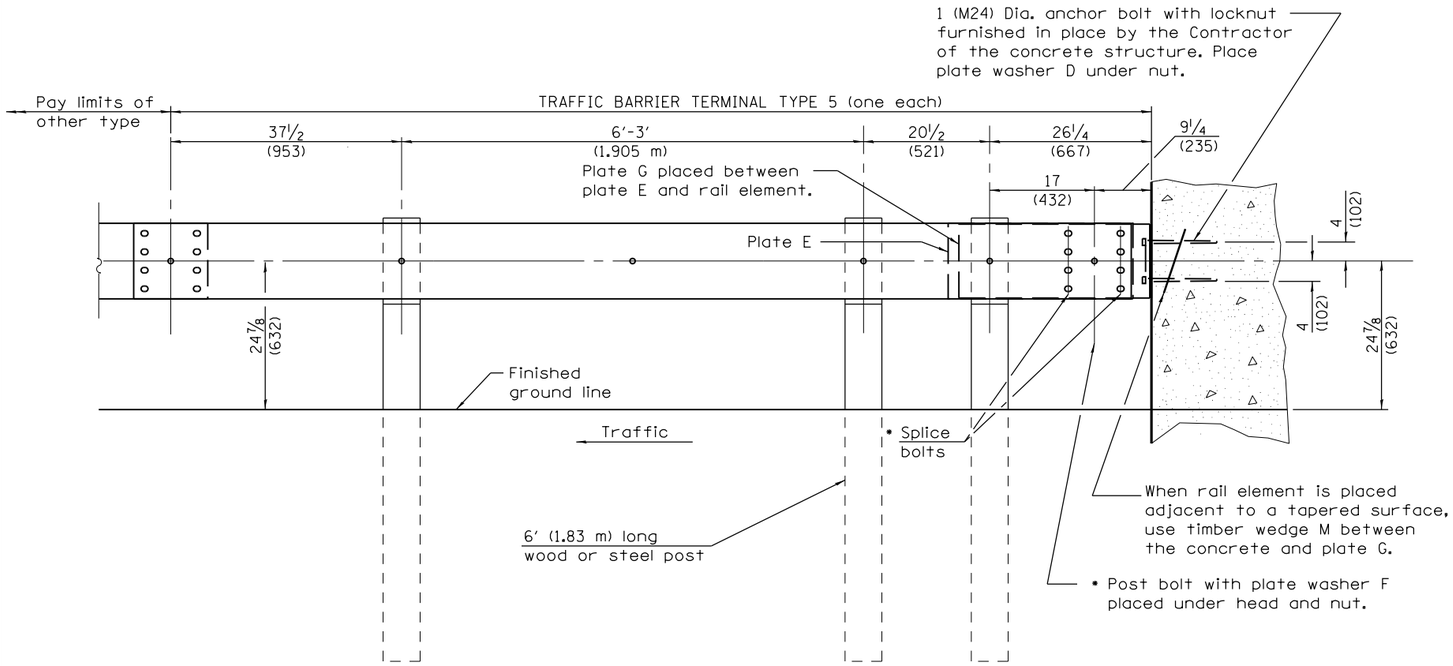


## TYPE 5 – CONCRETE BRIDGE PARAPET

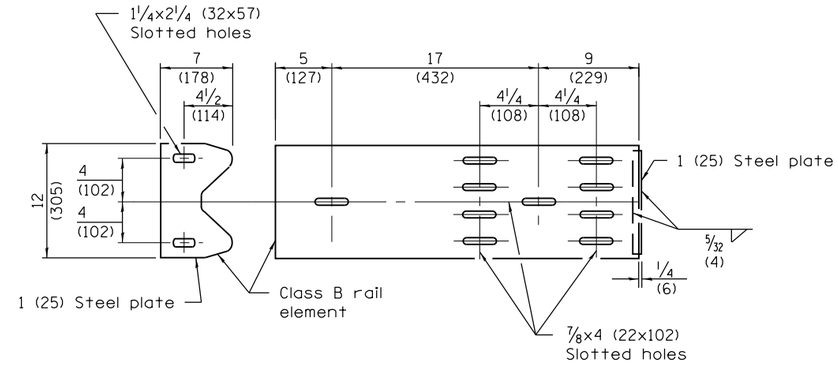


## PLATE G

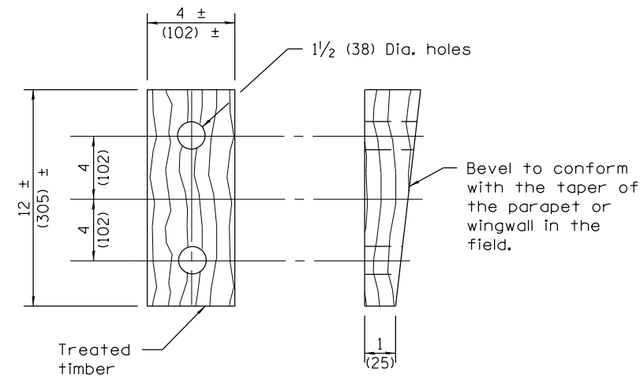


## WEDGE M

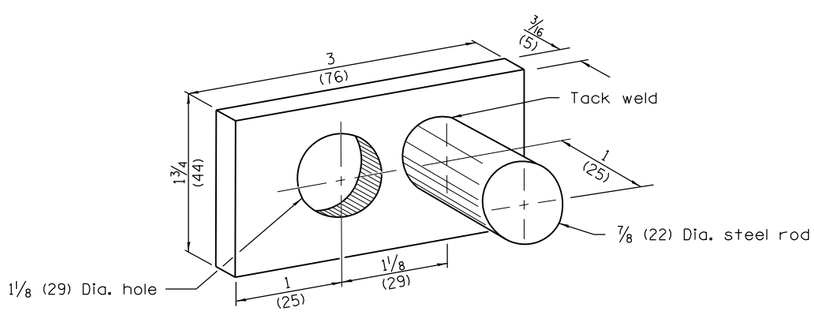


## PLATE WASHER D

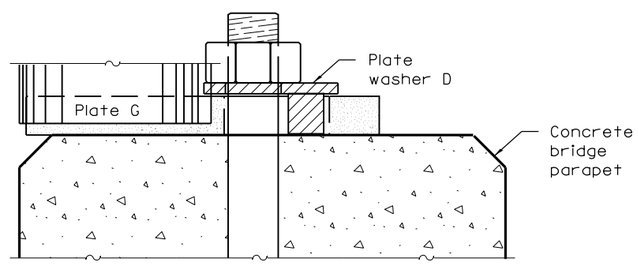


## PLACEMENT OF PLATE WASHER D

(PLAN)

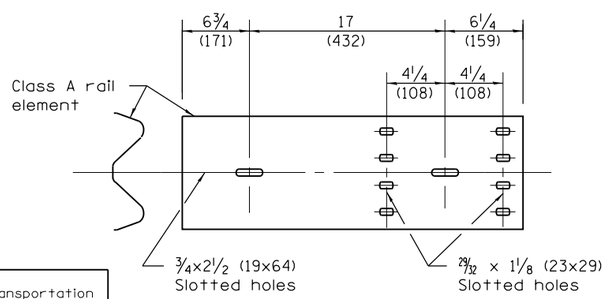


## PLATE E

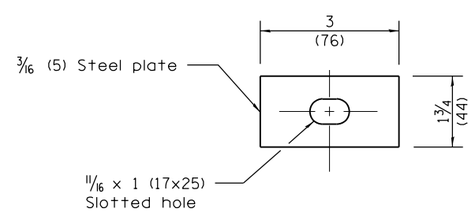


## PLATE WASHER F

## GENERAL NOTES

Install plate washer D so the 1 (25) projection fills the remainder of the slotted holes in the 1 (25) end plate on plate G after the 1 (M24) dia. bolts are in place.

- When an expansion joint exists below the connector, bolts shall be provided with a locknut or double nuts and shall be tightened only to a point that will allow plate G to be free to move.

See Standard 630001 for details of guardrail not shown.

All dimensions are in inches (millimeters) unless otherwise shown.

Illinois Department of Transportation

PASSED January 1, 2015
Michael Brand
ENGINEER OF POLICY AND PROCEDURES
APPROVED January 1, 2015
ENGINEER OF DESIGN AND ENVIRONMENT

ISSUED 1-1-97

| DATE | REVISIONS |
|---|---|
| 1-1-15 | Revised post spacing |
| | dimensions on elavation. |
| | |
| 1-1-09 | Switched units to |
| | English (metric). |
| | |

# TRAFFIC BARRIER TERMINAL, TYPE 5

STANDARD 631026–06

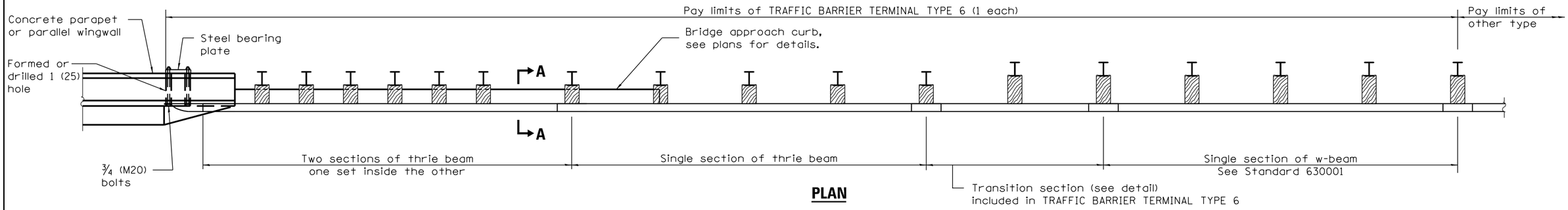


**PLAN**

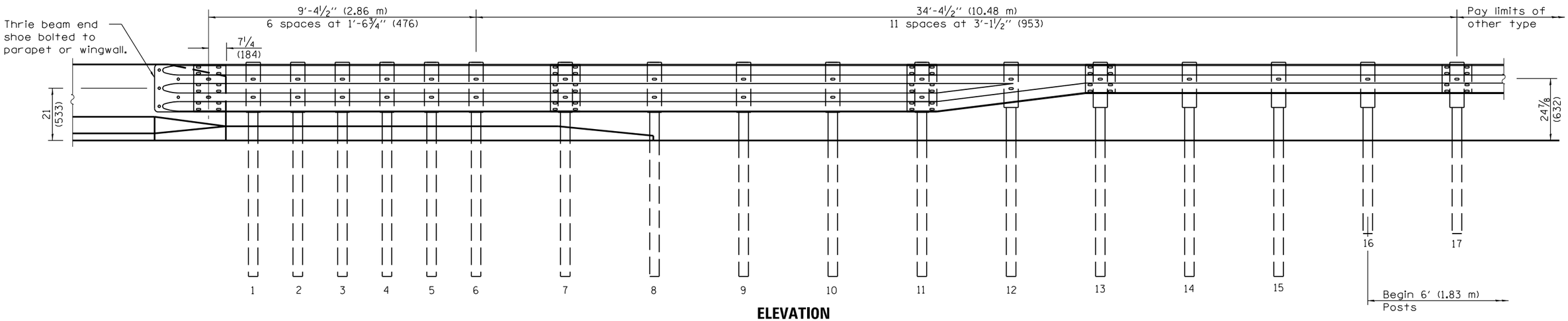


**ELEVATION**

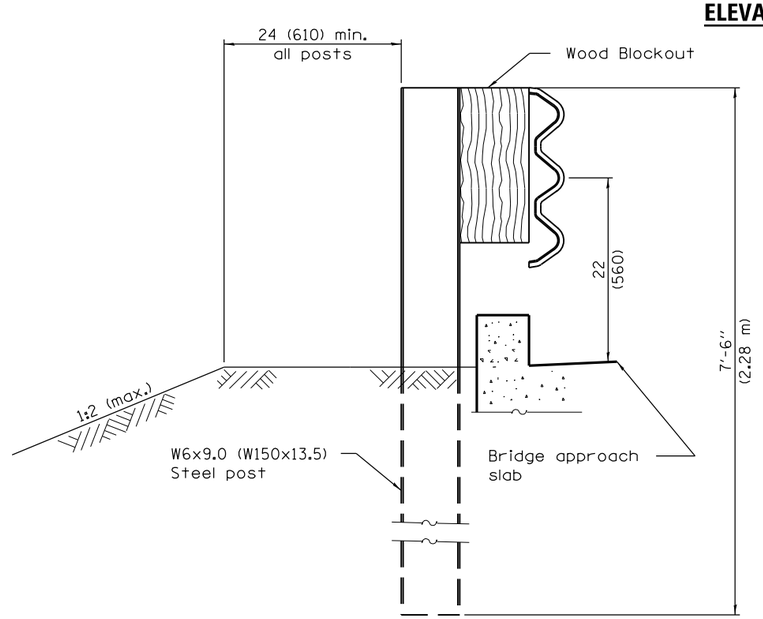


**SECTION A–A**

## GENERAL NOTES

See Standard 630001 for details of guardrail not shown.

Thrie beam rail shall be bolted to block-out at all posts.

All slope ratios are expressed as units of vertical displacement to units of horizontal displacement (V:H).

All dimensions are in inches (millimeters) unless otherwise shown.

Illinois Department of Transportation

PASSED April 1, 2016
Michael Brand
ENGINEER OF POLICY AND PROCEDURES

APPROVED April 1, 2016
ENGINEER OF DESIGN AND ENVIRONMENT

ISSUED 1-1-97

| DATE | REVISIONS |
|---|---|
| 4-1-16 | Changed 'Bridge approach |
| | pavement' to 'Bridge |
| | approach slab'. |
| 1-1-15 | Revised note for attachment |
| | to concrete structure. |

# TRAFFIC BARRIER TERMINAL, TYPE 6

(Sheet 1 of 3)

**STANDARD 631031–14**

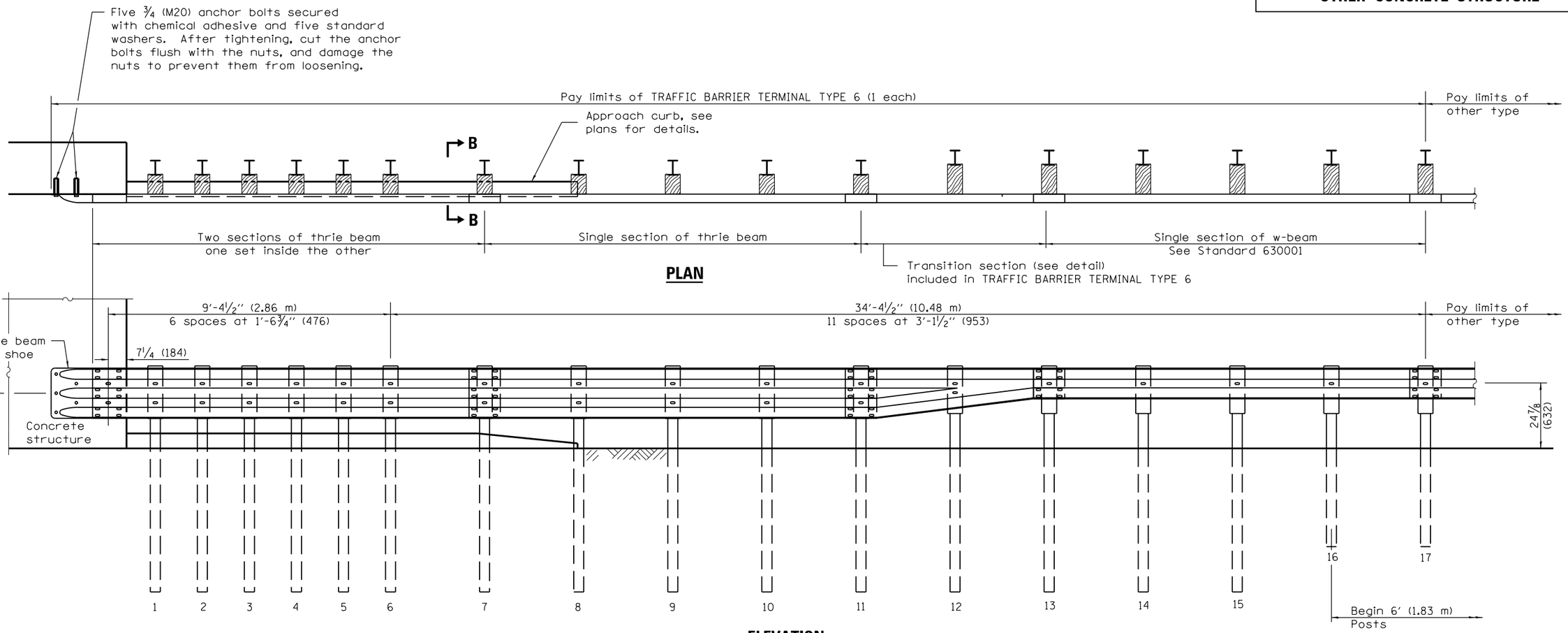


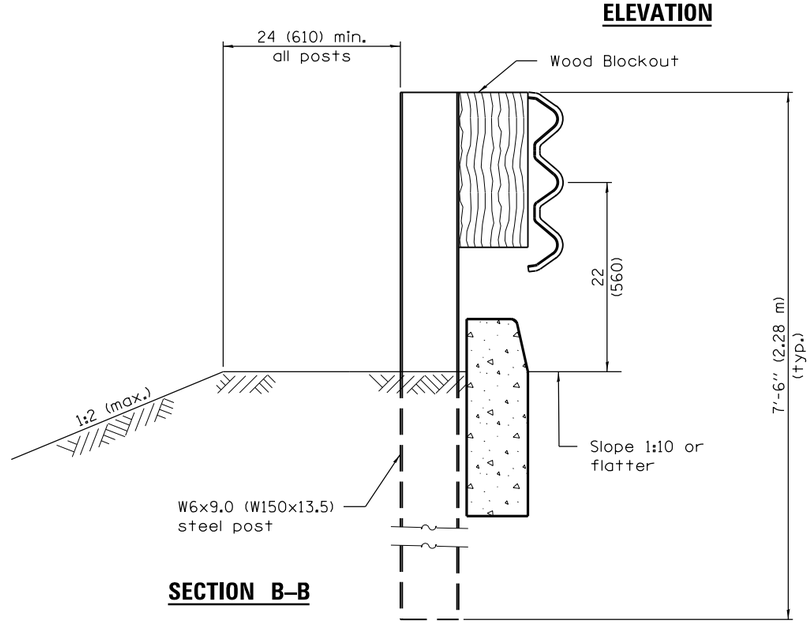


Illinois Department of Transportation

PASSED April 1, 2016

ENGINEER OF POLICY AND PROCEDURES

APPROVED April 1, 2016

ENGINEER OF DESIGN AND ENVIRONMENT

ISSUED 1-1-97

# TRAFFIC BARRIER TERMINAL, TYPE 6

(Sheet 2 of 3)

STANDARD 631031–14

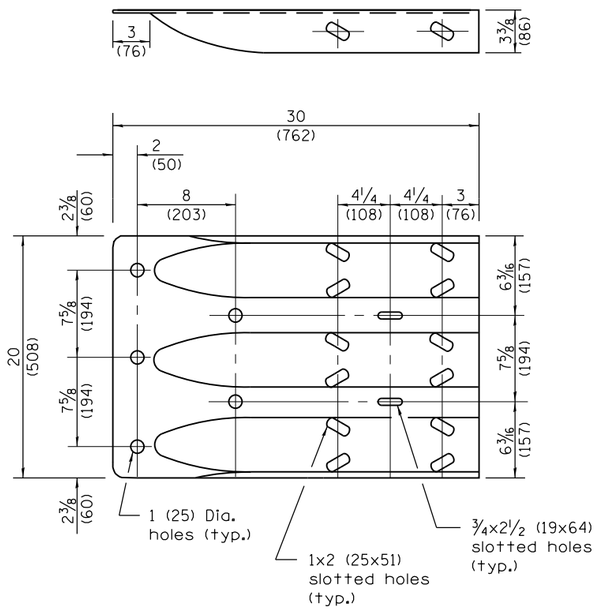


**THRIE BEAM END SHOE DETAIL**

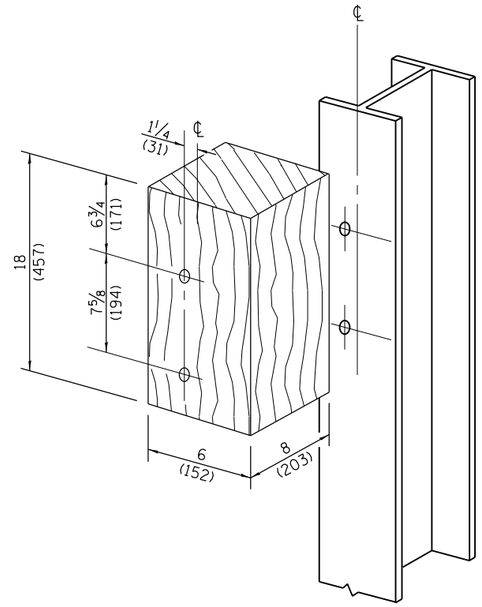


**POSTS 1–11 WOOD BLOCKOUT DETAIL**

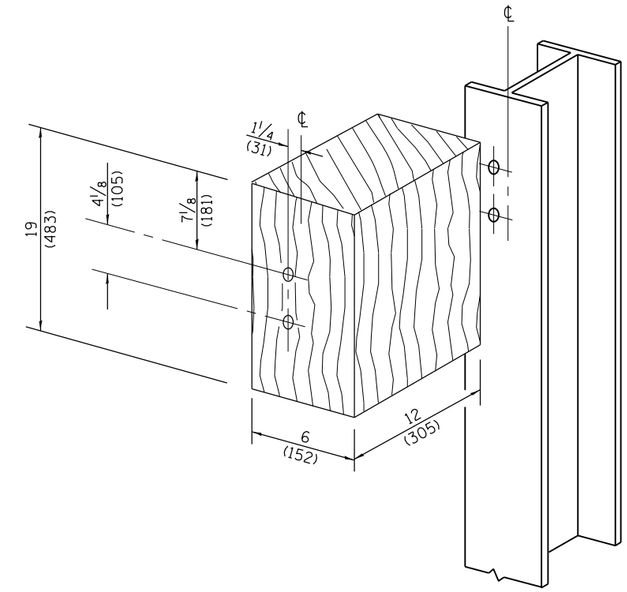


**POST 12 WOOD BLOCKOUT DETAIL**

(See Standard 630001 for post 13-17 blockouts.)

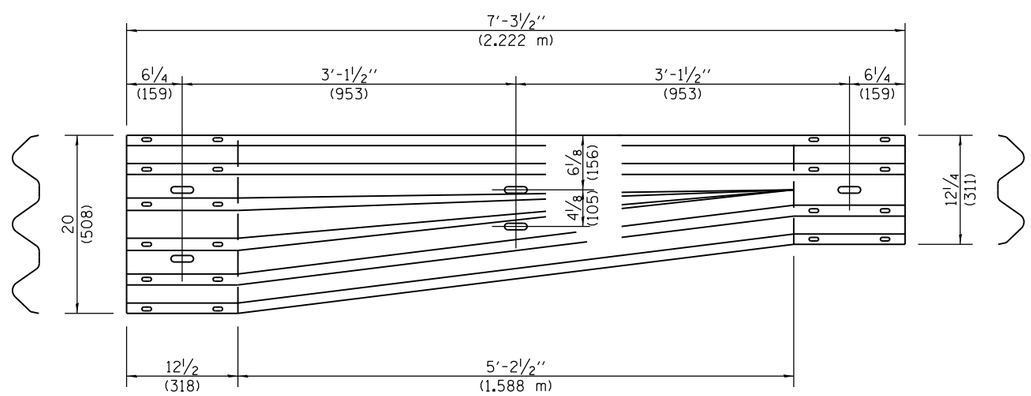


**TRANSITION SECTION**

(10 gauge (3.4) rail element)

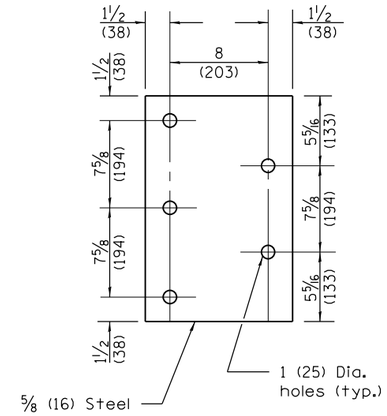


**PARAPET STEEL BEARING PLATE DETAIL**

(5 each individual 5x5x5/8 (125x125x16) steel plates with centered 1 (25) holes may be substituted for the plate shown.)

Illinois Department of Transportation

PASSED April 1, 2016

Michael Brand
ENGINEER OF POLICY AND PROCEDURES

APPROVED April 1, 2016

ENGINEER OF DESIGN AND ENVIRONMENT

ISSUED 1-1-97

# TRAFFIC BARRIER TERMINAL, TYPE 6

(Sheet 3 of 3)

**STANDARD 631031–14**

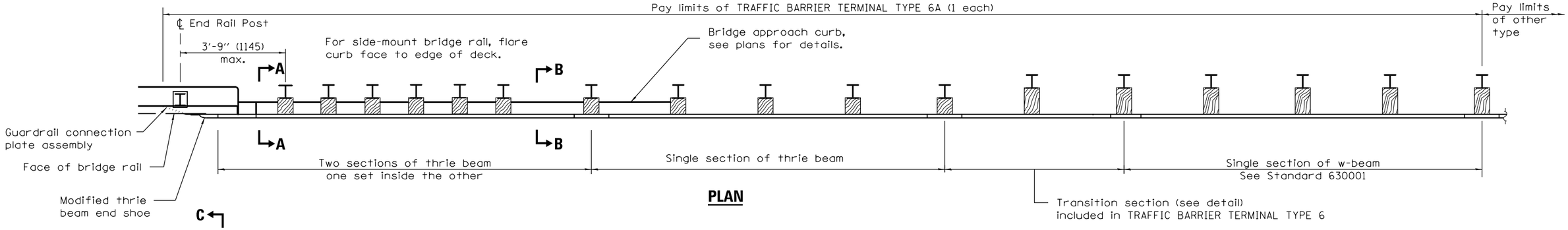


**PLAN**

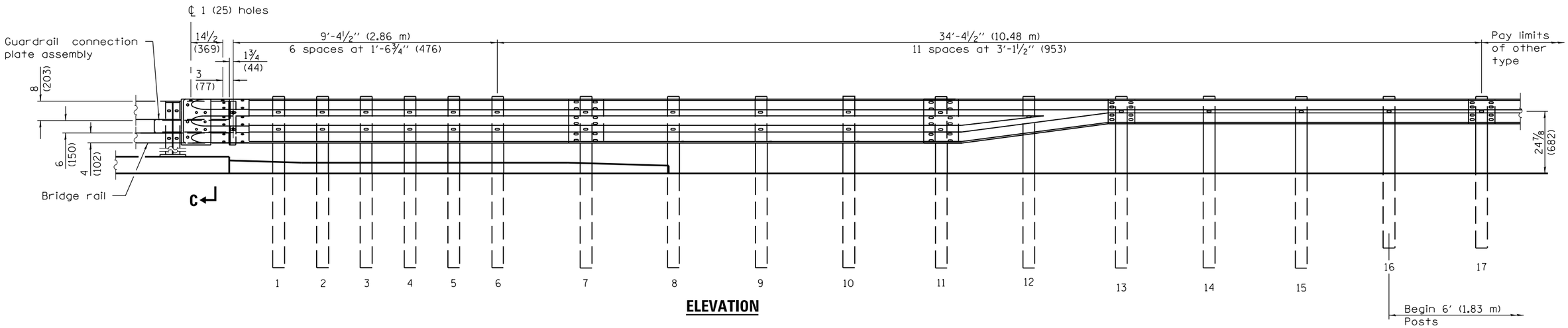


**ELEVATION**

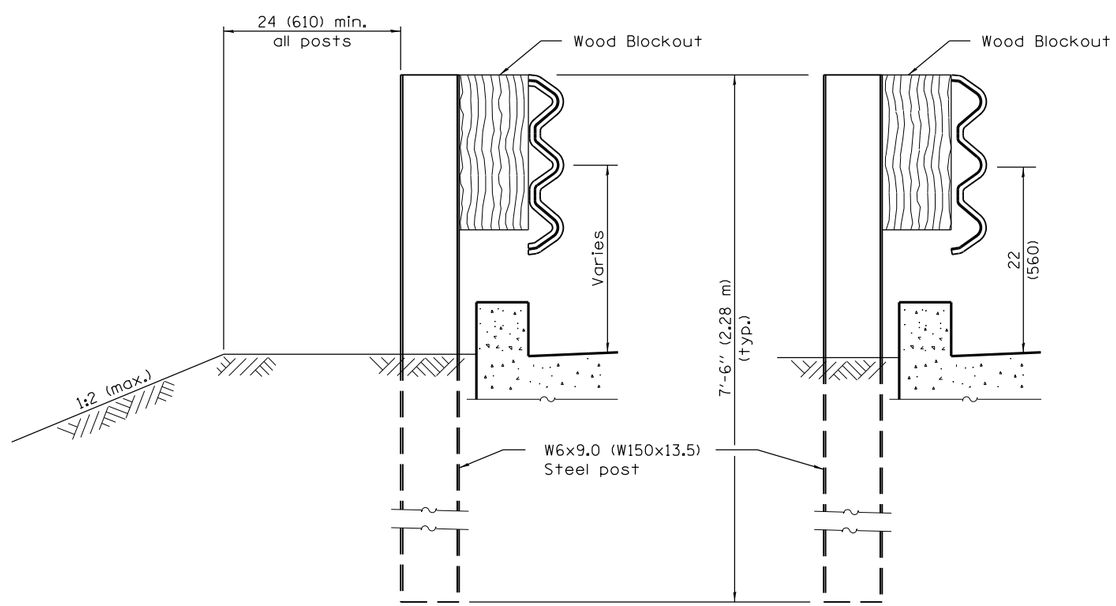


**SECTION A–A** **SECTION B–B**

## GENERAL NOTES

This standard shows attachment to curb mounted bridge rail. Attachment to side mounted bridge rail is similar.

See Standard 630001 for details of guardrail not shown.

Thrie beam rail shall be bolted to block-out at all posts.

All slope ratios are expressed as units of vertical displacement to units of horizontal displacement (V:H).

All dimensions are in inches (millimeters) unless otherwise shown.

Illinois Department of Transportation

PASSED January 1, 2013
Michael Brand
ENGINEER OF POLICY AND PROCEDURES
APPROVED January 1, 2013
ENGINEER OF DESIGN AND ENVIRONMENT

ISSUED 1-1-2003

| DATE | REVISIONS |
|---|---|
| 1-1-13 | Added note to see plans |
| | for bridge approach curb |
| | details. |
| 1-1-12 | Corrected curb length. |
| | |
| | |

# TRAFFIC BARRIER TERMINAL, TYPE 6A

(Sheet 1 of 3)

**STANDARD 631032–08**

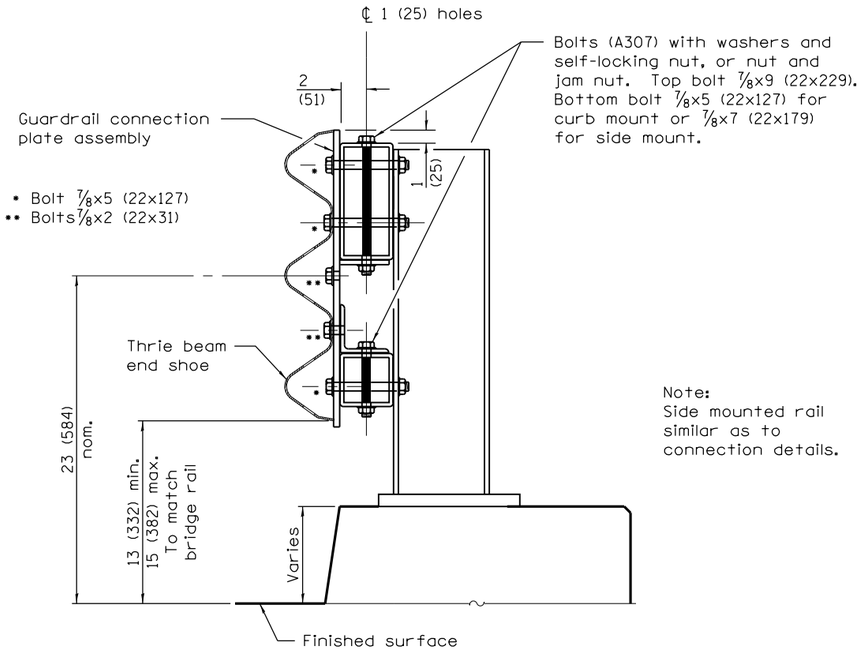


Note:
Side mounted rail similar as to connection details.

**SECTION C–C**

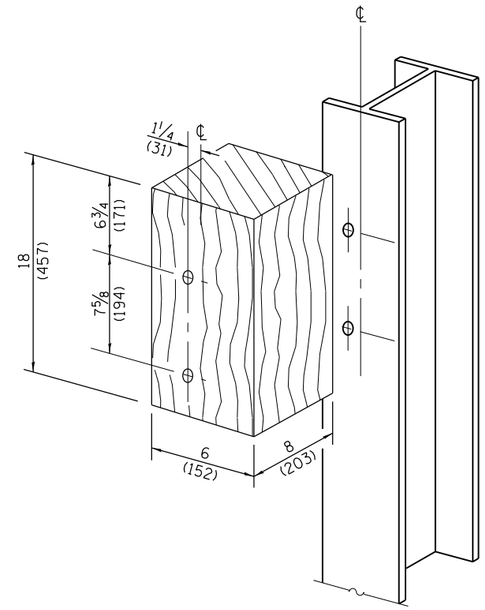


**POSTS 1–11 WOOD BLOCKOUT DETAIL**

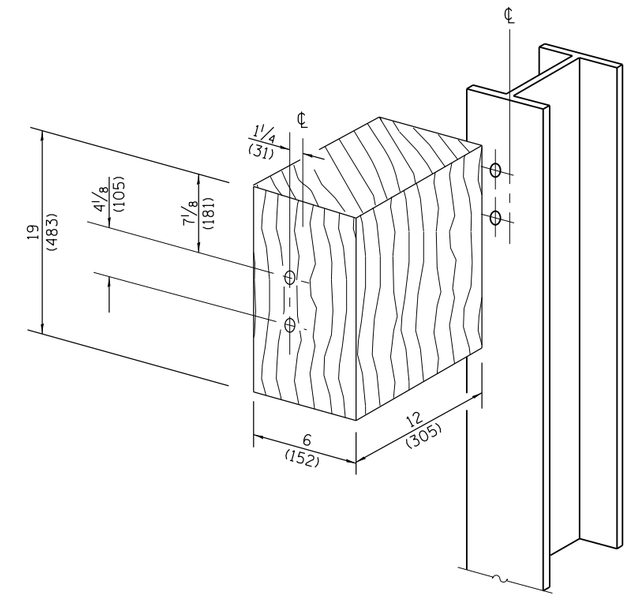


**POST 12 WOOD BLOCKOUT DETAIL**
(See Standard 630001 for post 13-17 blockouts.)

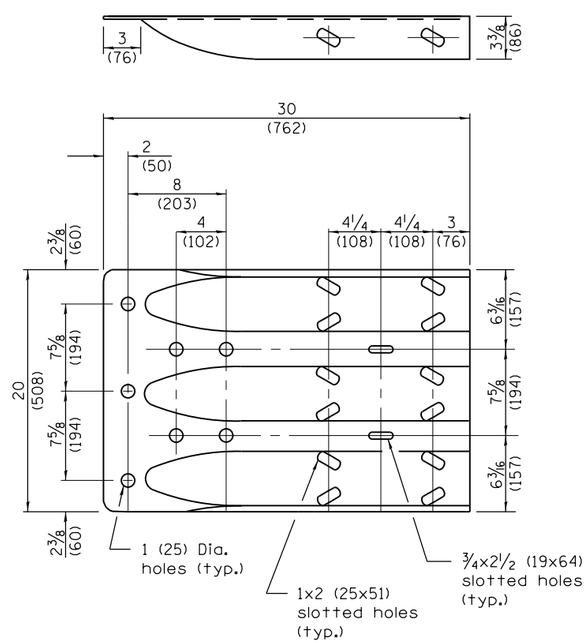


**MODIFIED THRIE BEAM END SHOE DETAIL**

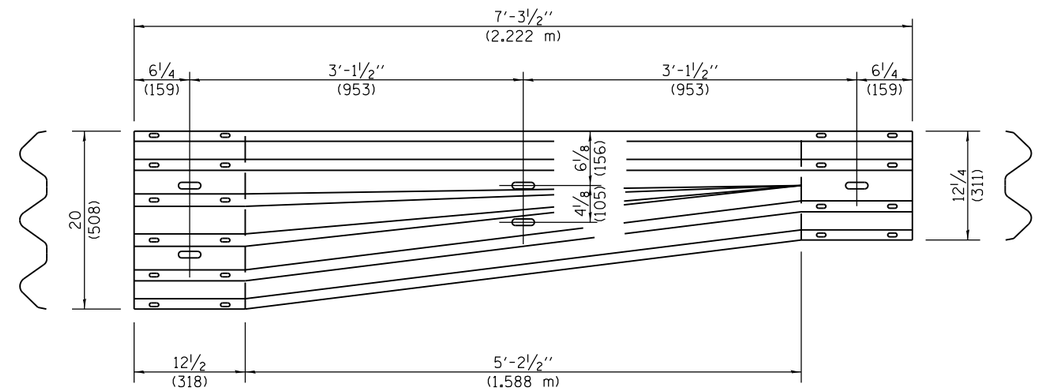


**TRANSITION SECTION**
(10 gauge (3.4) rail element)

Illinois Department of Transportation

PASSED January 1, 2013
Michael Brand
ENGINEER OF POLICY AND PROCEDURES
APPROVED January 1, 2013
ENGINEER OF DESIGN AND ENVIRONMENT

ISSUED 1-1-2003

# TRAFFIC BARRIER TERMINAL, TYPE 6A

(Sheet 2 of 3)

**STANDARD 631032–08**

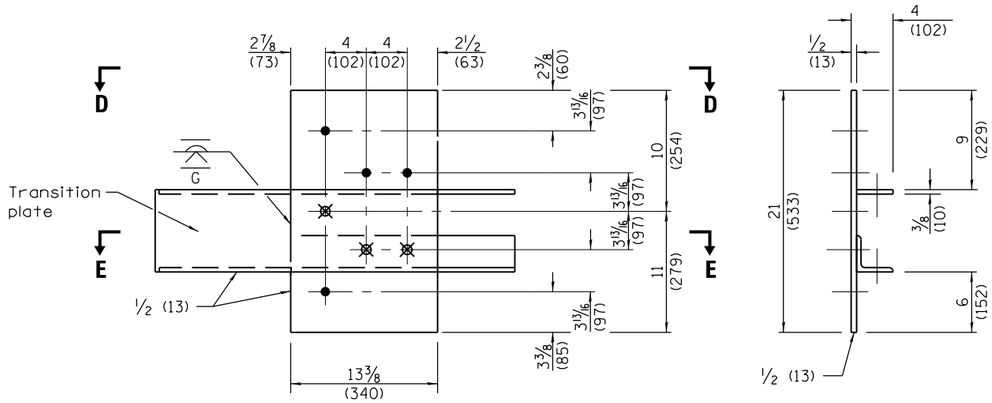


## LEGEND

● ℄ 4-1 (25) holes for 7/8 (22) H.S. bolts and nuts

⊗ Drill and tap 3 holes for 7/8 (22) H.S. bolts.

| Dimensions | A | B |
|---|---|---|
| For Curb Mounted Rail | 8 3/4 (222) | 3 1/2 (89) |
| For Side Mounted Rail | 9 3/4 (247) | 2 1/2 (64) |

## GUARDRAIL CONNECTION PLATE ASSEMBLY DETAILS

(Mirror for opposite end)

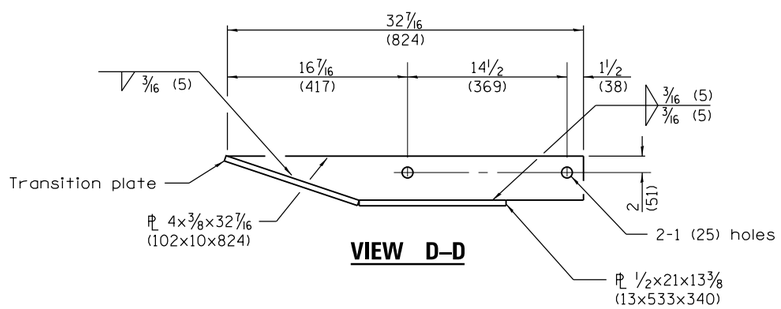


### VIEW D–D

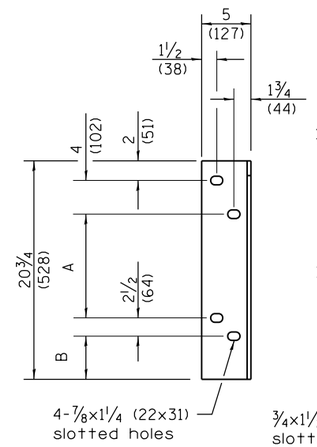


### DEPARTURE END VIEW

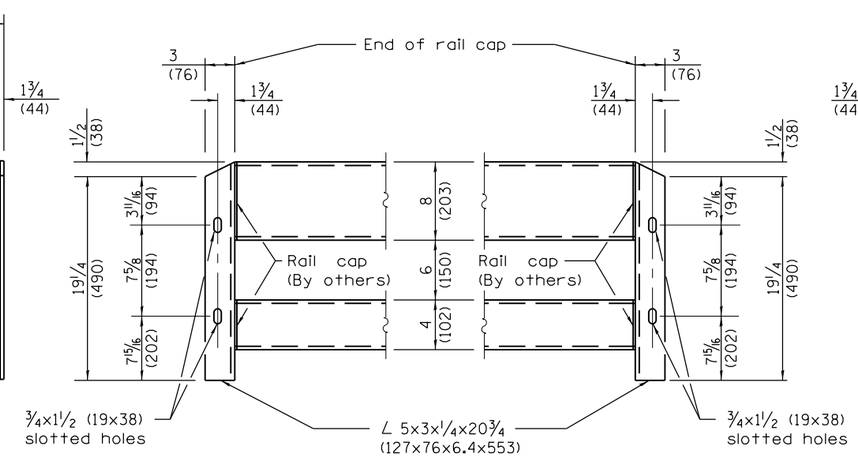


### CONNECTION ANGLES

(Install angles to rail caps using 5/8 (19) washers and self-locking nuts or nuts and jam nuts, to be provided by others)

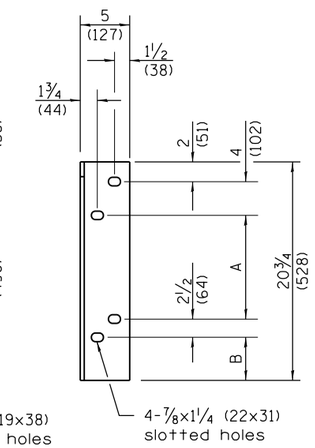


### APPROACH END VIEW

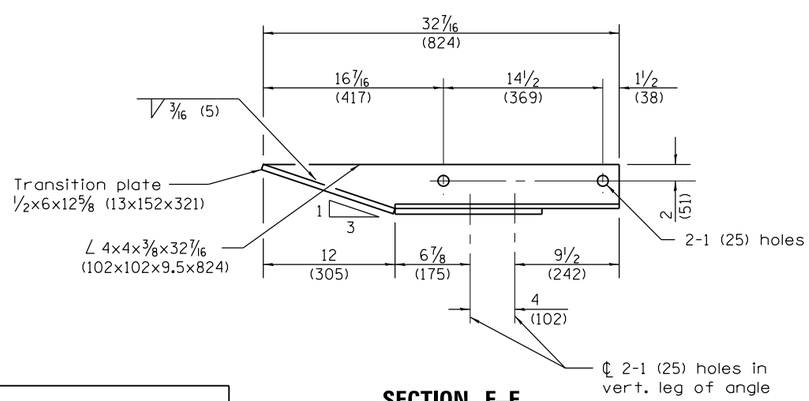


### SECTION E–E

Illinois Department of Transportation

PASSED January 1, 2013

Michael Brand

ENGINEER OF POLICY AND PROCEDURES

APPROVED January 1, 2013

ENGINEER OF DESIGN AND ENVIRONMENT

ISSUED 1-1-2003

# TRAFFIC BARRIER TERMINAL, TYPE 6A

(Sheet 3 of 3)

**STANDARD 631032–08**

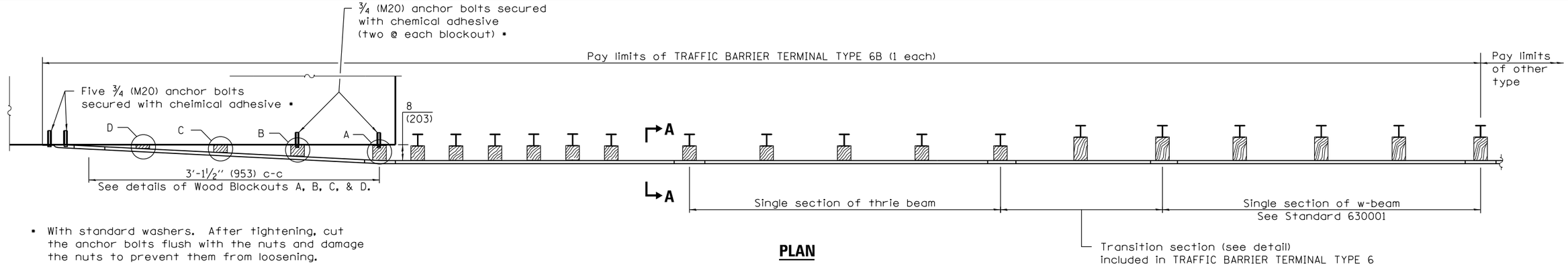


• With standard washers. After tightening, cut the anchor bolts flush with the nuts and damage the nuts to prevent them from loosening.

**PLAN**

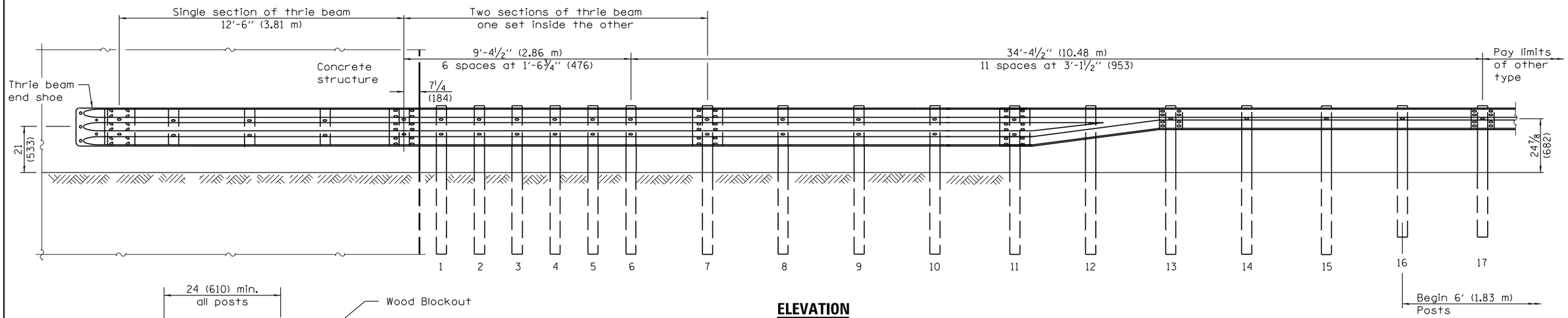


**ELEVATION**

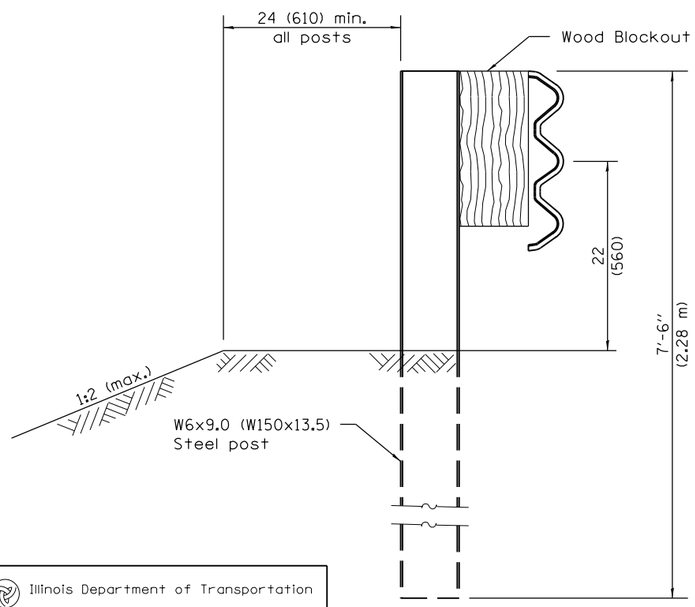


**SECTION A–A**

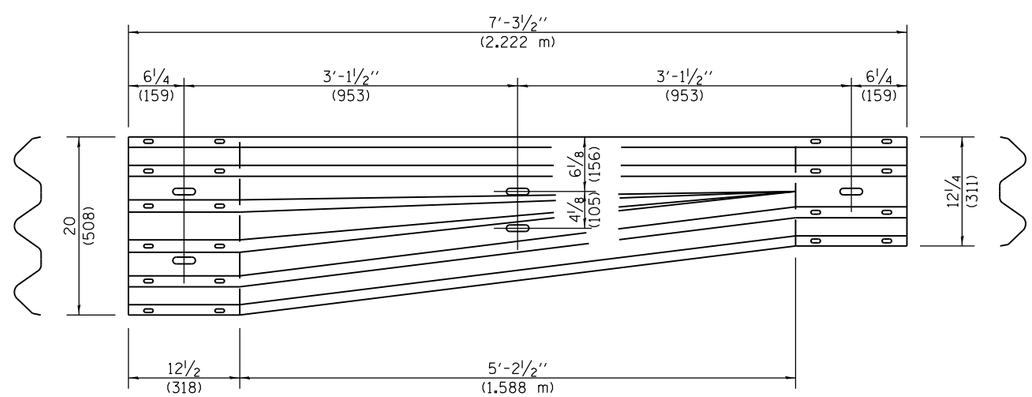


**TRANSITION SECTION**

(10 guage (3.4) rail element)

## GENERAL NOTES

See Standard 630001 for details of guardrail not shown.

Thrie beam rail shall be bolted to block-out at all posts.

All slope ratios are expressed as units of vertical displacement to units of horizontal displacement (V:H).

All dimensions are in inches (millimeters) unless otherwise shown.

Illinois Department of Transportation

PASSED January 1, 2015

Michael Brand
ENGINEER OF POLICY AND PROCEDURES

APPROVED January 1, 2015

ENGINEER OF DESIGN AND ENVIRONMENT

ISSUED 1-1-2003

| DATE | REVISIONS |
|---|---|
| 1-1-15 | Revised notes for |
| | attachment to concrete |
| | structure. |
| 1-1-11 | Added section A-A symbol to |
| | plan view. Revised height of |
| | thrie beam. |

# TRAFFIC BARRIER TERMINAL, TYPE 6B

(Sheet 1 of 2)

**STANDARD 631033–06**

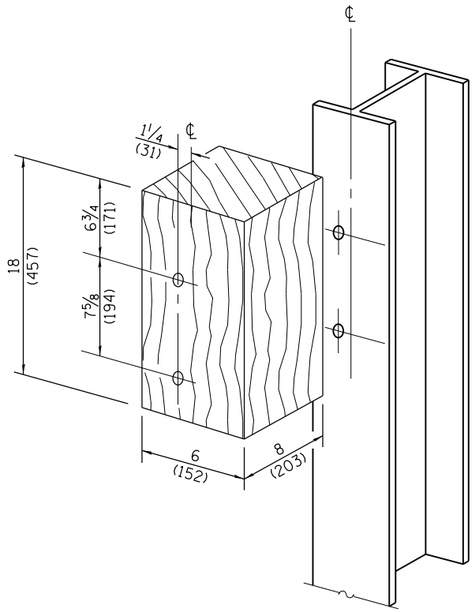


**POSTS 1–11 WOOD BLOCKOUT DETAIL**

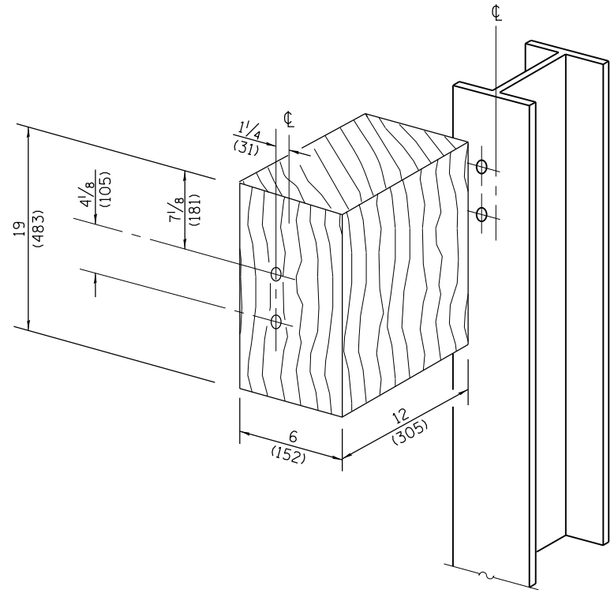


**POST 12 WOOD BLOCKOUT DETAIL**

(See Standard 630001 for post 13-17 blockouts.)

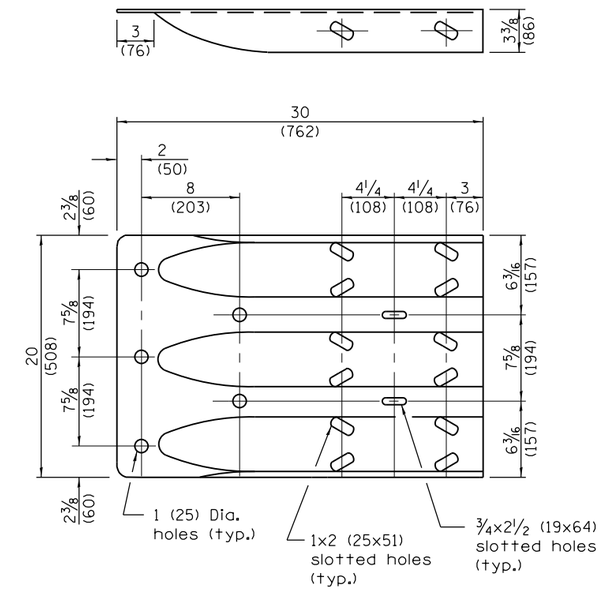


**THRIE BEAM END SHOE DETAIL**

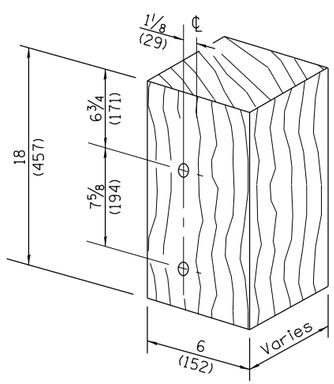


**MODIFIED THICKNESS DETAIL**
**WOOD BLOCKOUTS A, B, C, & D**

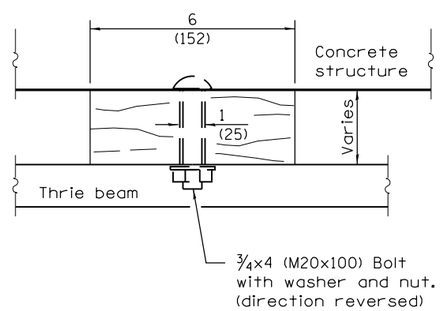


**WOOD BLOCKOUT D**

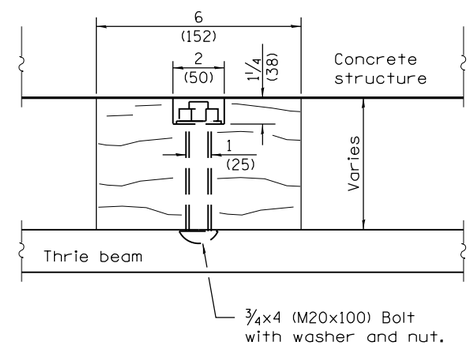


**WOOD BLOCKOUT C**

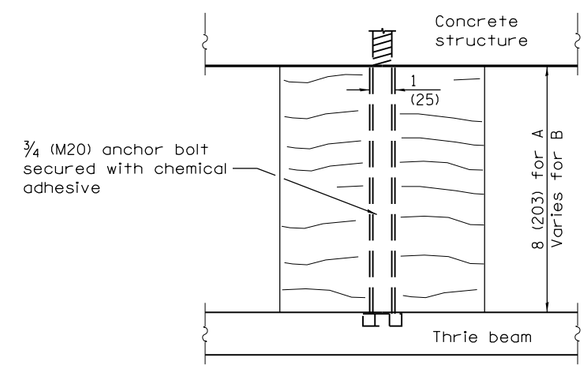


**WOOD BLOCKOUT A & B**

Illinois Department of Transportation

PASSED January 1, 2015
Michael Brand
ENGINEER OF POLICY AND PROCEDURES
APPROVED January 1, 2015
ENGINEER OF DESIGN AND ENVIRONMENT

ISSUED 1-1-2003

# TRAFFIC BARRIER TERMINAL, TYPE 6B

(Sheet 2 of 2)

**STANDARD 631033–06**

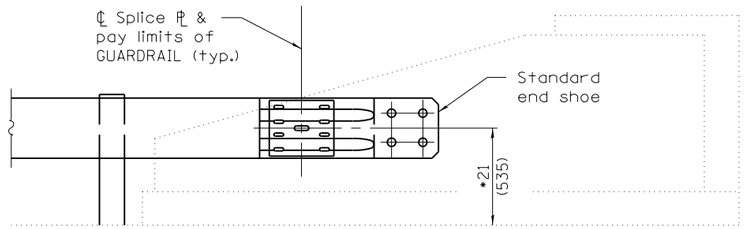


**ELEVATION**

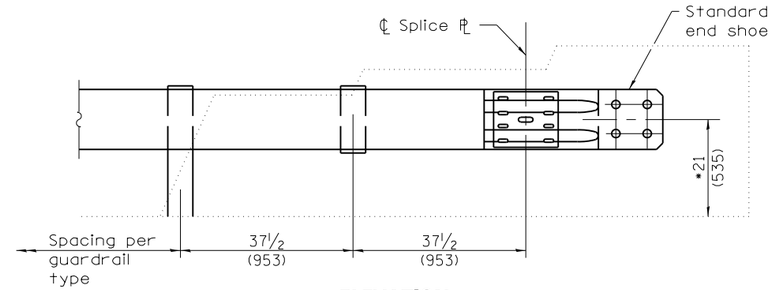


**ELEVATION**

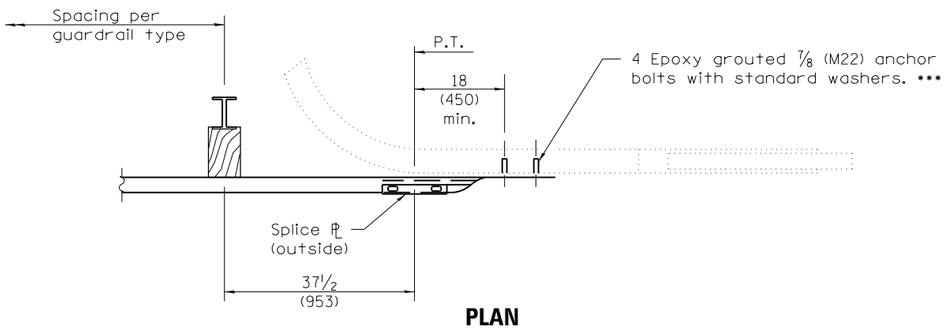


**PLAN**
**CURVED WING**

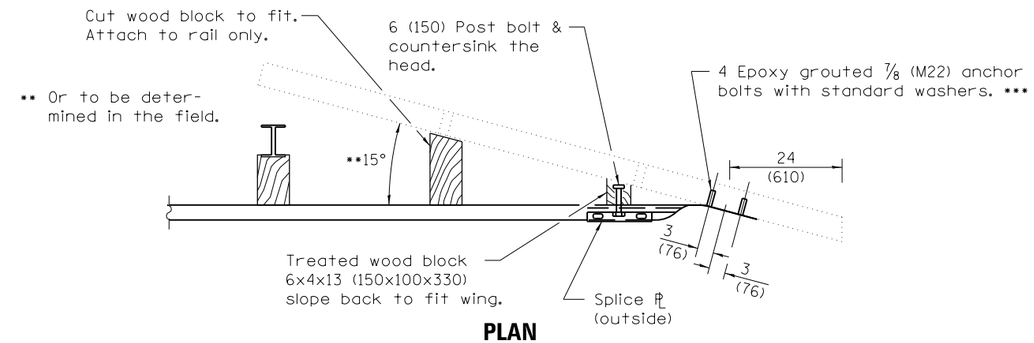


**PLAN**
**FLARED WING**

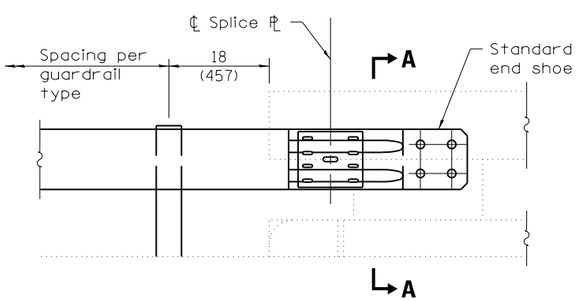


**ELEVATION**

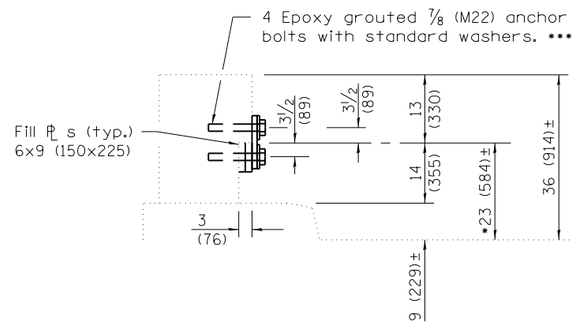


**SECTION A–A**
(HIGH RAIL)

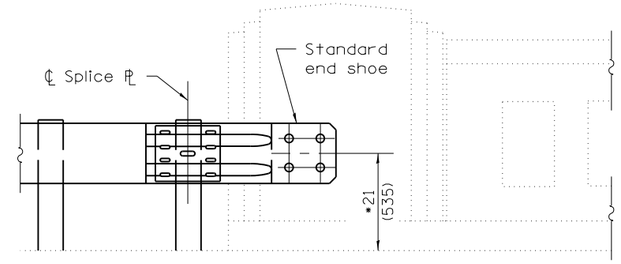


**ELEVATION**

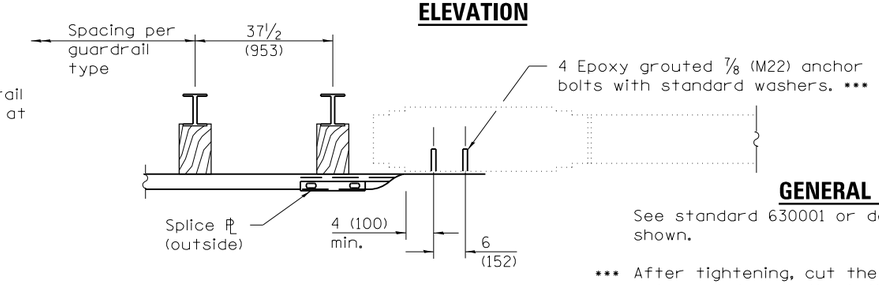


**PLAN**
**CONCRETE HANDRAIL**

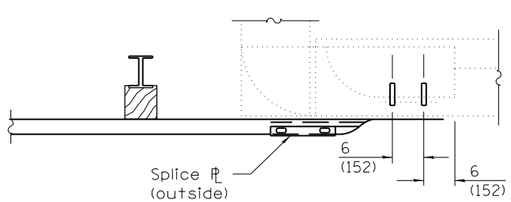


**PLAN**

• Taper guardrail
to 24⅞ (632) at
third post.

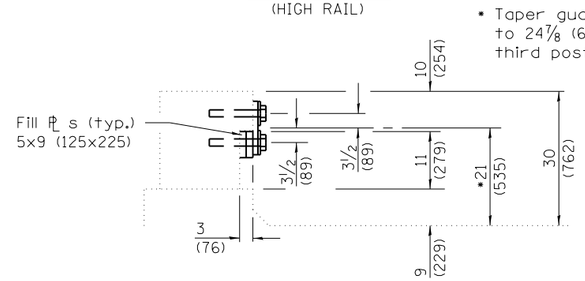


**SECTION A–A**
(LOW RAIL)

**REINFORCED CONCRETE HANDRAIL**

## GENERAL NOTES

See standard 630001 or details of guardrail not shown.

••• After tightening, cut the anchor bolts flush with nuts, and damage the bolt head to prevent it from loosening.

All dimensions are in inches (millimeters) unless otherwise shown.

Illinois Department of Transportation

PASSED January 1, 2009
ENGINEER OF POLICY AND PROCEDURES
APPROVED January 1, 2009
ENGINEER OF DESIGN AND ENVIRONMENT

ISSUED 1-1-97

| DATE | REVISIONS |
|---|---|
| 1-1-09 | Switched units to |
| | English (metric). |
| | |
| 1-1-07 | Changes adopted to |
| | implement the Midwest |
| | Guardrail System. |

# TRAFFIC BARRIER TERMINAL, TYPE 10

**STANDARD 631046–04**

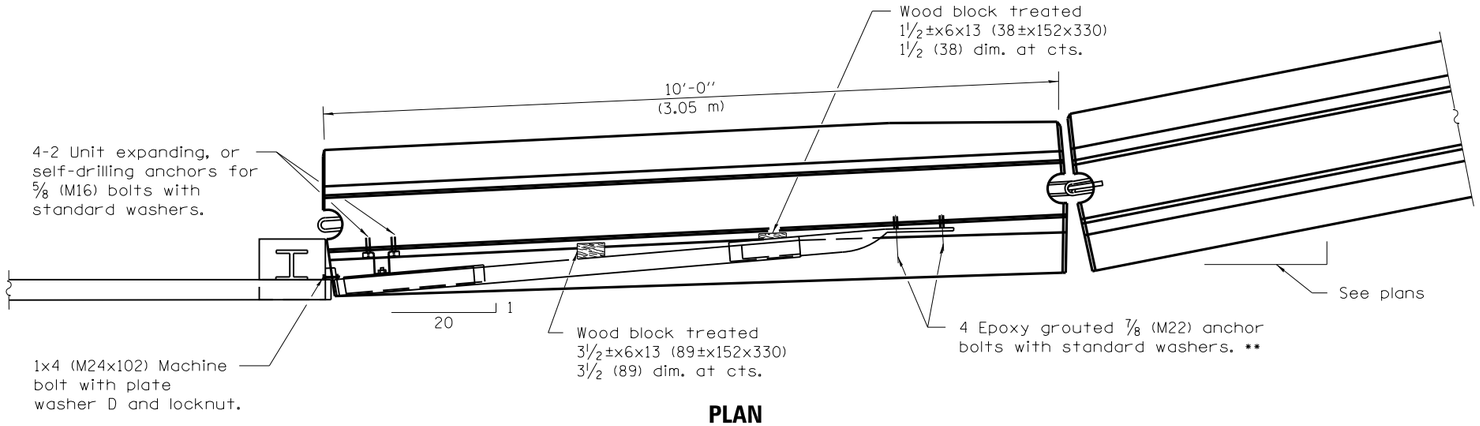


**PLAN**

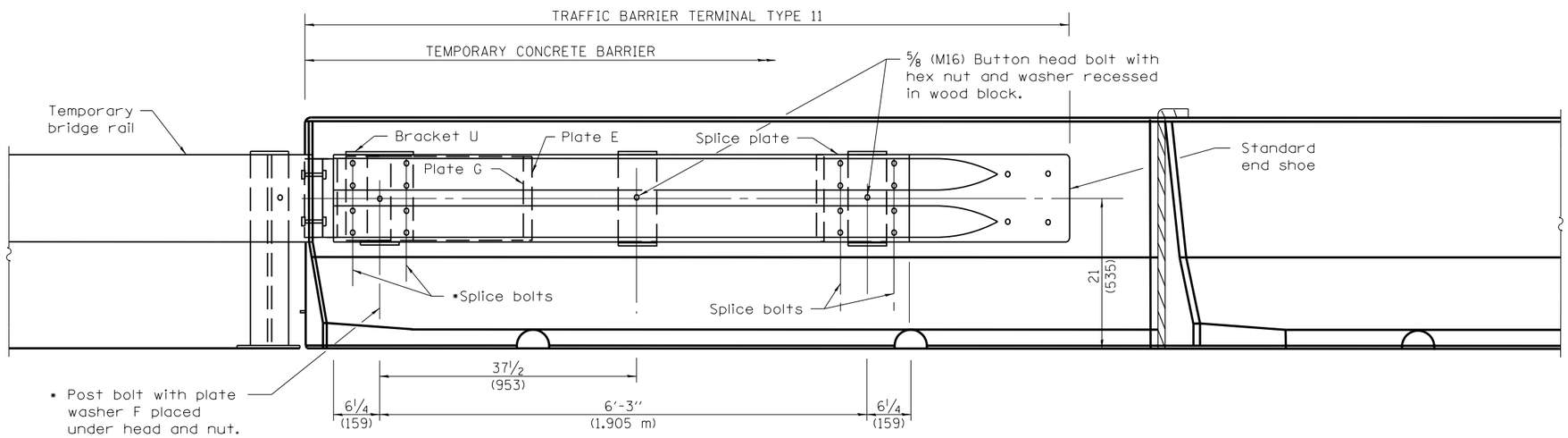


**ELEVATION**

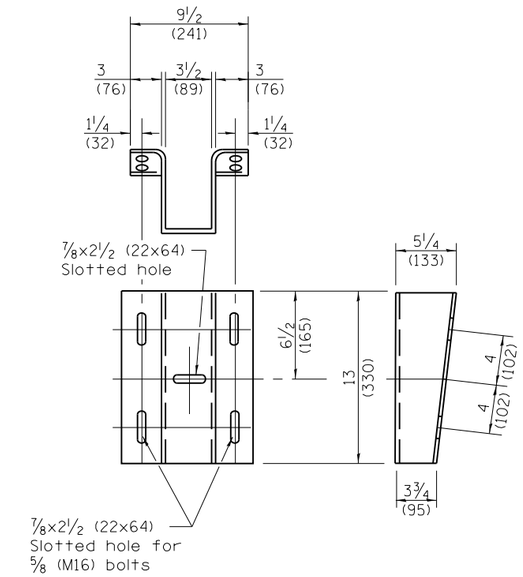


**BRACKET U**

(¼ (6) Thick steel plate or rectangular tubing with flange welded on.)

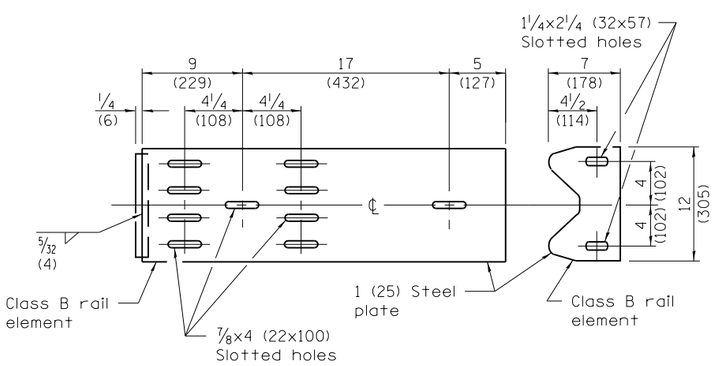


**PLATE G**

(Place between the rail element and Plate E)

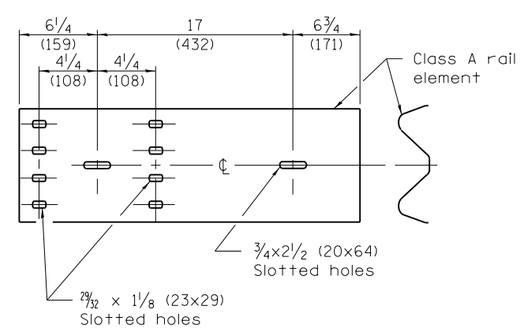


**PLATE E**

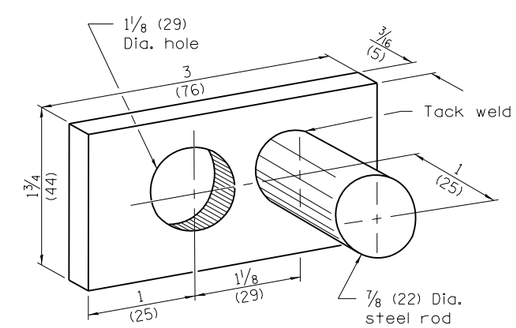


**PLATE WASHER D**

## GENERAL NOTES

For details of guardrail not shown, see Standard 630001.

Install the face of the guardrail flush with the face of the temporary bridge rail. Install plate washer D so that the 1 (25) projection fills the remainder of the slotted holes in the 1 (25) end plate on plate G after the 1 (M24) diameter bolts are in place.

* Bolts shall be provided with a lock nut or double nut and shall be tightened only to a point that will allow plate G to be free to move.

** After tightening, cut the anchor bolts flush with nuts, and damage the bolt head to prevent them from loosening.

All dimensions are in inches (millimeters) unless otherwise shown.

Illinois Department of Transportation

PASSED January 1, 2011
Michael Brand
ENGINEER OF POLICY AND PROCEDURES
APPROVED January 1, 2011
ENGINEER OF DESIGN AND ENVIRONMENT

ISSUED 1-1-97

| DATE | REVISIONS |
|---|---|
| 1-1-11 | Corrected weld symbol on |
| | PLATE G detail. |
| | |
| 1-1-09 | Switched units to |
| | English (metric). |
| | |

# TRAFFIC BARRIER TERMINAL TYPE 11

**STANDARD 631051-03**

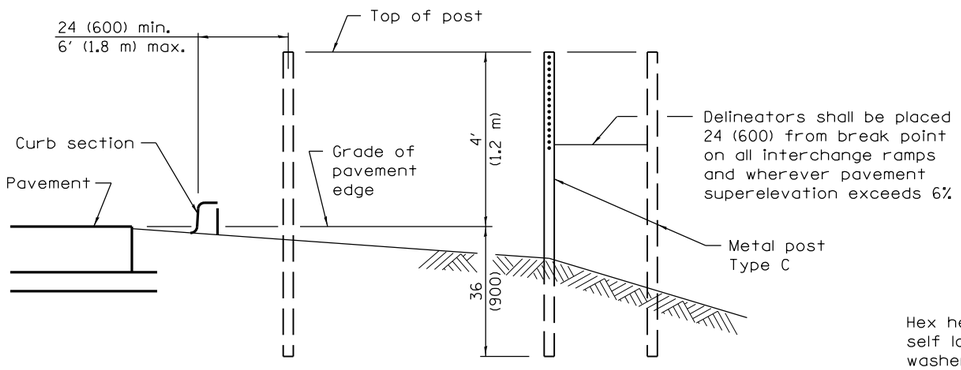


## SECTIONAL VIEW

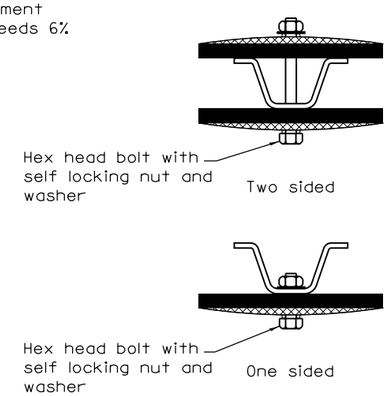


## PLAN

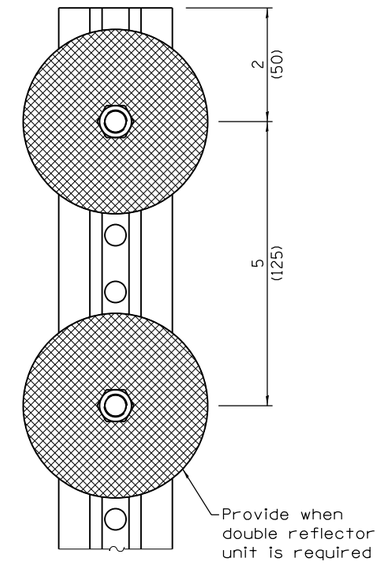


## ELEVATION

## REFLECTOR ATTACHED TO POST

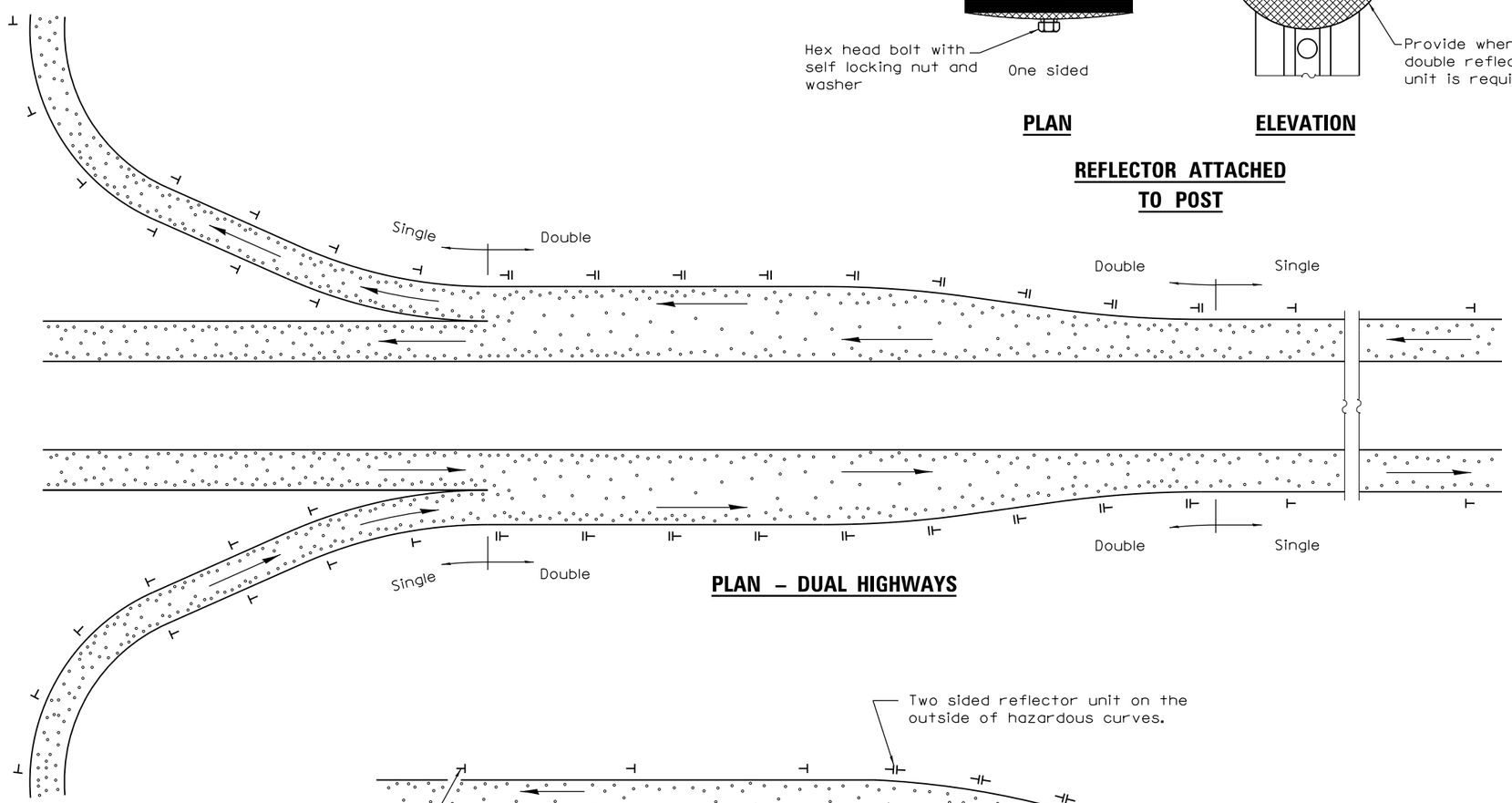


## PLAN – DUAL HIGHWAYS

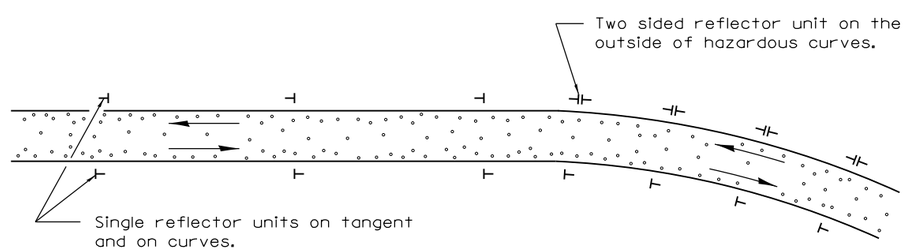


## PLAN – TWO–WAY ROADWAYS

## SPACING FOR DELINEATORS ON HORIZONTAL CURVES

| Radius of Curve Feet (m) | Spacing on Curve Feet (m) | Spacing in Advance and Beyond Curve Feet (m) | | |
|---|---|---|---|---|
| | | 1st. Space | 2nd. Space | 3rd. Space |
| Less than 100 | 20 | 40 | 65 | 125 |
| (30) | (5) | (10) | (20) | (40) |
| 100 - 174 | 30 | 60 | 90 | 180 |
| (30 - 54) | (10) | (20) | (25) | (55) |
| 175 - 224 | 35 | 70 | 110 | 200 |
| (55 - 69) | (10) | (20) | (35) | (60) |
| 225 - 274 | 40 | 85 | 125 | 200 |
| (70 - 84) | (10) | (25) | (40) | (60) |
| 275 - 349 | 50 | 95 | 145 | 200 |
| (85 - 104) | (15) | (30) | (45) | (60) |
| 350 - 449 | 55 | 110 | 170 | 200 |
| (105 - 134) | (15) | (35) | (50) | (60) |
| 450 - 549 | 65 | 125 | 190 | 200 |
| (135 - 164) | (20) | (40) | (60) | (60) |
| 550 - 649 | 70 | 140 | 200 | 200 |
| (165 - 199) | (20) | (45) | (60) | (60) |
| 650 - 749 | 75 | 150 | 200 | 200 |
| (200 - 229) | (25) | (45) | (60) | (60) |
| 750 - 849 | 80 | 165 | 200 | 200 |
| (230 - 259) | (25) | (50) | (60) | (60) |
| 850 - 949 | 85 | 175 | 200 | 200 |
| (260 - 289) | (25) | (55) | (60) | (60) |
| 950 - 1049 | 90 | 185 | 200 | 200 |
| (290 - 319) | (25) | (55) | (60) | (60) |
| 1050 - 1299 | 100 | 200 | 200 | 200 |
| (320 - 394) | (30) | (60) | (60) | (60) |
| 1300 - 1999 | 125 | 200 | 200 | 300 |
| (395 - 609) | (40) | (60) | (60) | (90) |
| 2000 - 2999 | 150 | 200 | 200 | 300 |
| (610 - 914) | (45) | (60) | (60) | (90) |
| 3000 - 3999 | 175 | 200 | 300 | 300 |
| (915 - 1219) | (55) | (60) | (90) | (90) |
| 4000 or greater | 400 | 400 | 400 | 400 |
| (1220) | (120) | (120) | (120) | (120) |

## GENERAL NOTES

Delineators on tangent sections of main line roadways shall be placed at 400′ (120 m) spacing. Delineators on ramps and acceleration and deceleration lanes shall be placed at a maximum spacing of 100′ (30 m).

Refer to Standard 720011 for details of metal post.

Double reflector units shall be used on the outside of all acceleration and deceleration lanes. Single reflector units shall be used on ramps. Delineators shall be used on outside of all curved sections of ramps.

All dimensions are in inches (millimeters) unless otherwise shown.

Illinois Department of Transportation

PASSED April 1, 2009
ENGINEER OF OPERATIONS
APPROVED April 1, 2009
ENGINEER OF DESIGN AND ENVIRONMENT

ISSUED 1-1-97

| DATE | REVISIONS |
|---|---|
| 4-1-16 | Added detail of reflector |
| | attached to post. Revised |
| | signature block. |
| 1-1-09 | Switched units to |
| | English (metric). |
| | Revised notes. |

# DELINEATORS

## STANDARD 635001–02

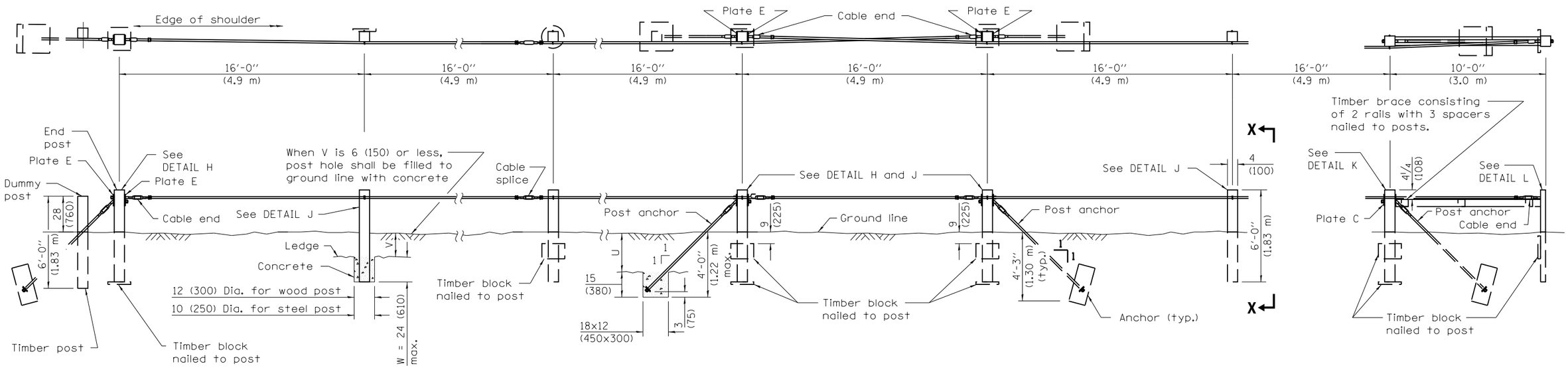


**END ANCHOR ARRANGEMENT**

**TYPICAL FOOTINGS FOR POST AND ANCHOR WHEN IMPERVIOUS MATERIAL IS ENCOUNTERED**

**INTERMEDIATE ANCHOR ARRANGEMENT**

**DEAD END ANCHOR ARRANGEMENT**

## NOTES

V + W shall not exceed 39 (990). When V is 0 to 15 (380), W = 24 (610), and posts shall be shortened as required. When V exceeds 15 (380), W shall be shortened correspondingly.

T = 15 (380) when U is 33 (840) or less. When U exceeds 33 (840) the impervious material shall be removed and the standard anchor shall be used.

Timber blocks shall be nailed to each wood post on the concave side of curve for curves having a radius of less than 600' (180 m).

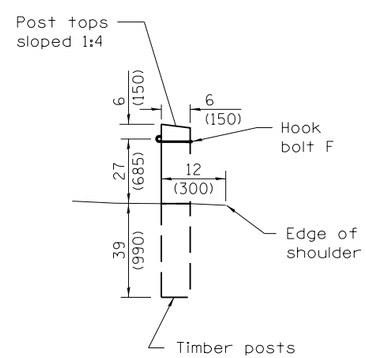


**VIEW X–X**

| Typical Wood Materials | |
|---|---|
| Item | Size |
| Post | 4x4x6'-0" (100x150x1.83 m) |
| Block | 2x12x18 (50x300x450) |
| Rail | 2x6 (50x150) |
| Spacer | 2x6x6 (50x150x150) |

## GENERAL NOTES

The Engineer will determine the stability of the impervious material for anchoring.

All slope ratios are expressed as units of vertical displacement to units of horizontal displacement (V:H).

All dimensions are in inches (millimeters) unless otherwise shown.

Illinois Department of Transportation

PASSED January 1, 2009
ENGINEER OF POLICY AND PROCEDURES
APPROVED January 1, 2009
ENGINEER OF DESIGN AND ENVIRONMENT

ISSUED 1-1-97

| DATE | REVISIONS |
|---|---|
| 1-1-09 | Switched units to Eng. |
| | (met.). omitted precast |
| | deadman and gen. note. |
| 1-1-05 | Corrected note on Post |
| | Anchor detail on sheet |
| | 3 of 3. |

# CABLE ROAD GUARD SINGLE STRAND

(Sheet 1 of 3)

**STANDARD 636001–02**

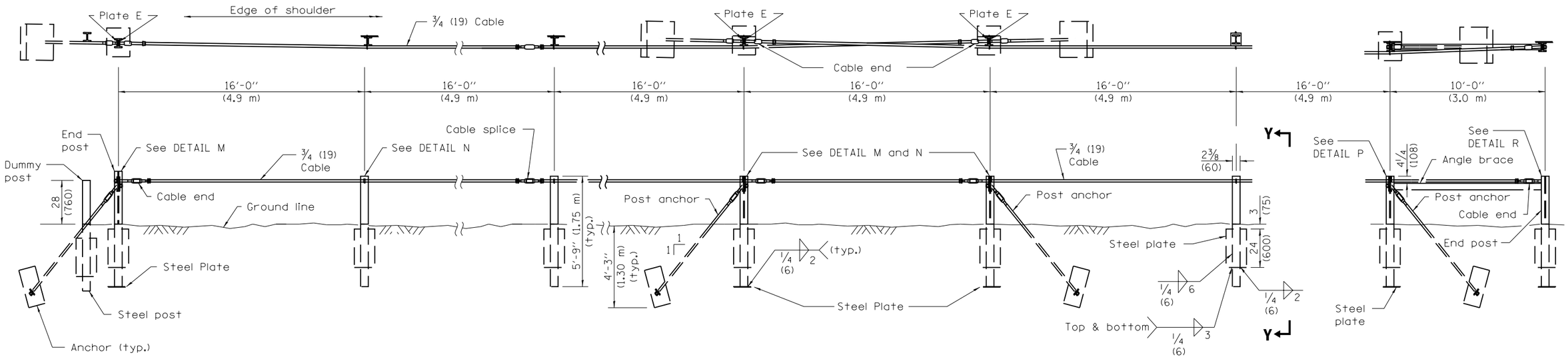


**END ANCHOR ARRANGEMENT**

**INTERMEDIATE ANCHOR ARRANGEMENT**

**DEAD END ANCHOR ARRANGEMENT**

| TYPICAL STEEL MATERIALS | |
|---|---|
| Item | Size |
| Post | S3x5.7x5'-9" (S75x8.5x1.75 m) |
| Bottom Plate | 1/4x8x8 (6x200x200) |
| Side Plate | 1/4x8x24 (6x200x600) |
| Brace | L 4x3x3/8 (L 102x76x9.5) |

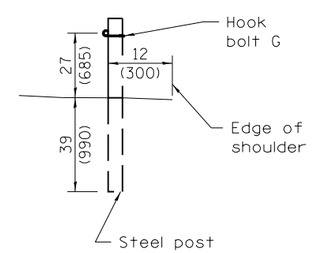


**VIEW Y–Y**

Illinois Department of Transportation

PASSED January 1, 2009

ENGINEER OF POLICY AND PROCEDURES

APPROVED January 1, 2009

ENGINEER OF DESIGN AND ENVIRONMENT

ISSUED 1-1-97

# CABLE ROAD GUARD SINGLE STRAND

(Sheet 2 of 3)

**STANDARD 636001–02**

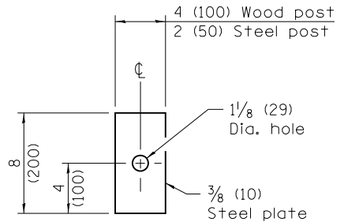


**PLATE C**

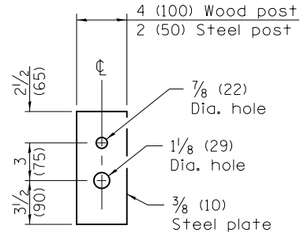


**PLATE E**

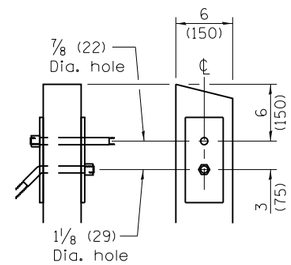


**DETAIL H**

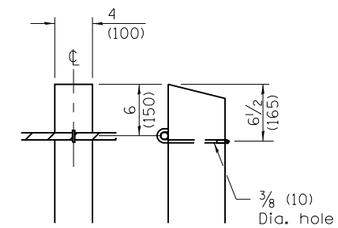


**DETAIL J**

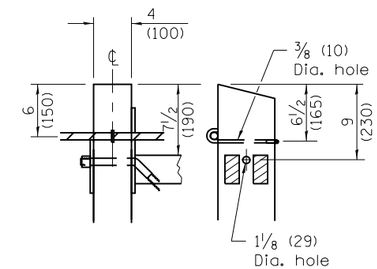


**DETAIL K**

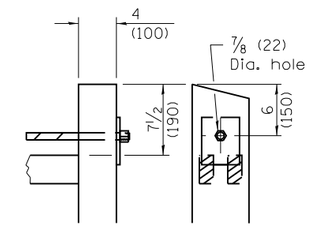


**DETAIL L**

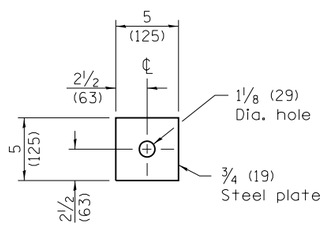


**PLATE B**

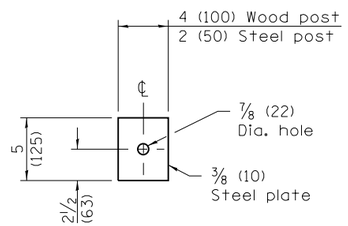


**PLATE D**

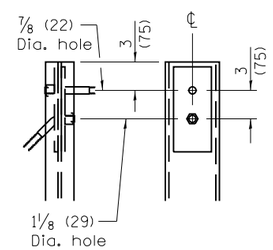


**DETAIL M**

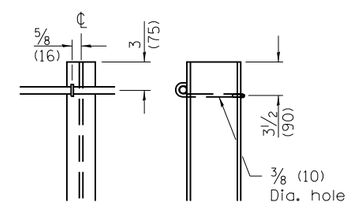


**DETAIL N**

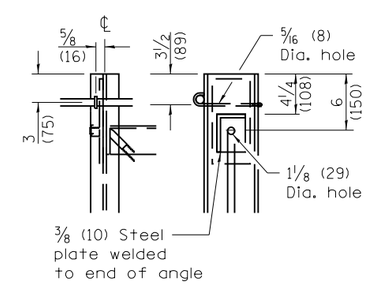


**DETAIL P**

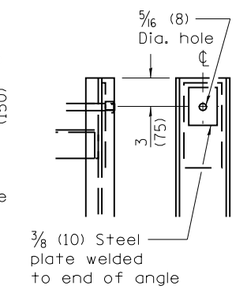


**DETAIL R**

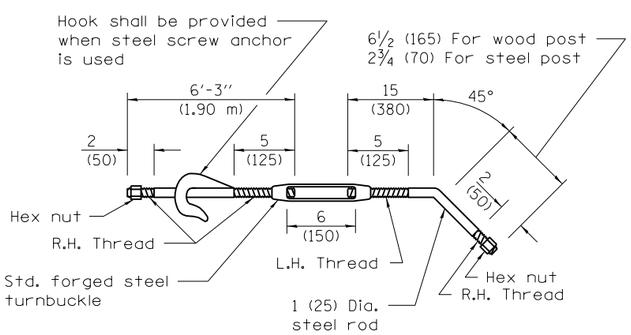


**POST ANCHOR**

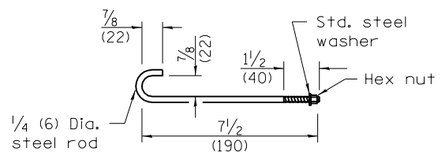


**HOOK BOLT F**

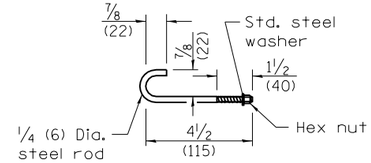


**HOOK BOLT G**

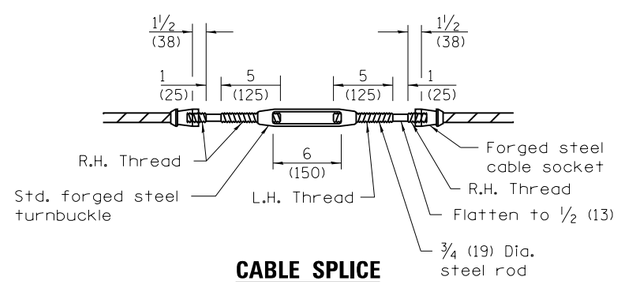


**CABLE SPLICE**

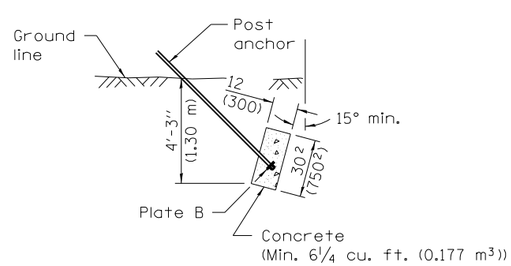


**CAST IN PLACE DEADMAN**

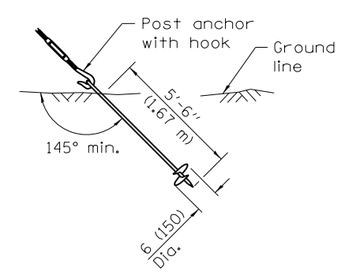


**STEEL SCREW**

**ALTERNATE – ANCHORS**

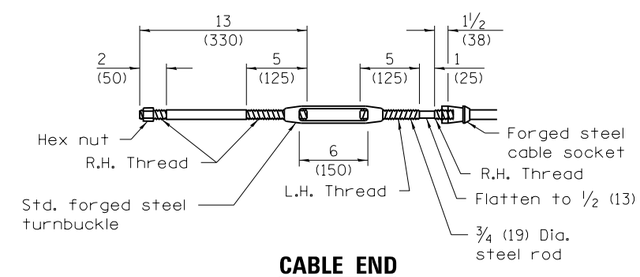


**CABLE END**

Illinois Department of Transportation

PASSED January 1, 2009
ENGINEER OF POLICY AND PROCEDURES
APPROVED January 1, 2009
ENGINEER OF DESIGN AND ENVIRONMENT

ISSUED 1-1-97

# CABLE ROAD GUARD SINGLE STRAND

(Sheet 3 of 3)

**STANDARD 636001–02**

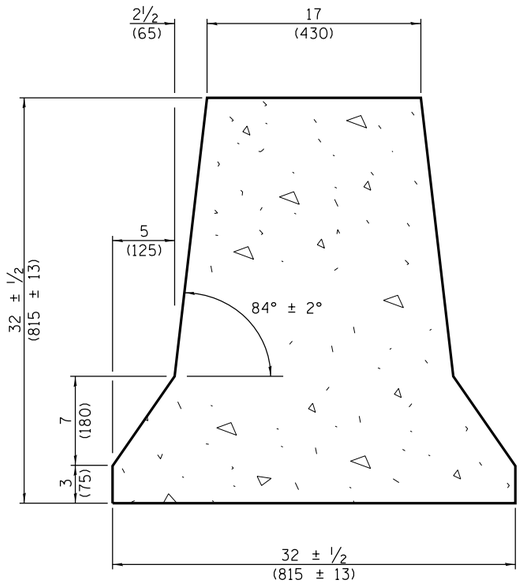


**TYPICAL CROSS–SECTION**

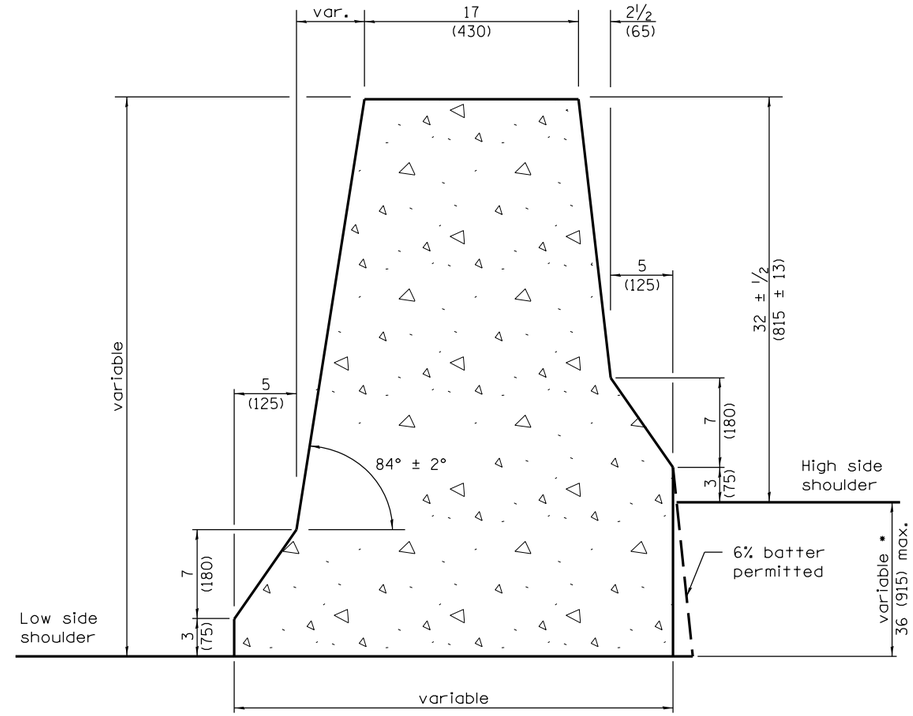


**VARIABLE CROSS–SECTION**

• When this dimension exceeds 12 (300), the barrier may be cast in two pours. No. 6 x 12 (No. 19 x 300) tie bars at 30 (760) centers, or a suitable keyway, shall be used between the pours.

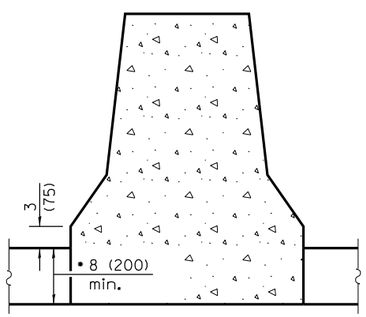


**NEW MONOLITHIC PCC BASE**

• This dimension shall be 10 (250) minimum when the barrier is confined by earth.

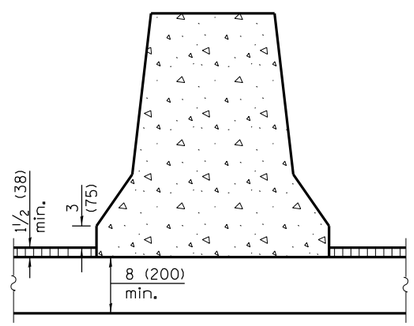


**NEW OR EXISTING BIT./PCC BASE WITH OVERLAY CONFINEMENT**

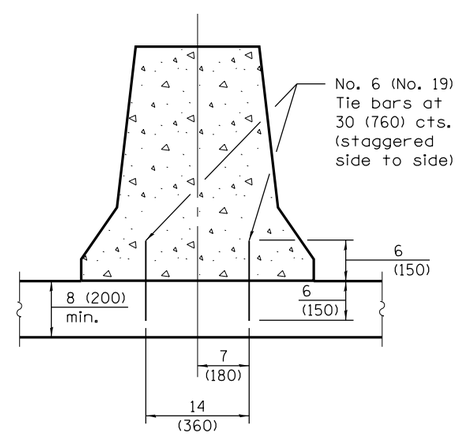


**NEW OR EXISTING PCC BASE**

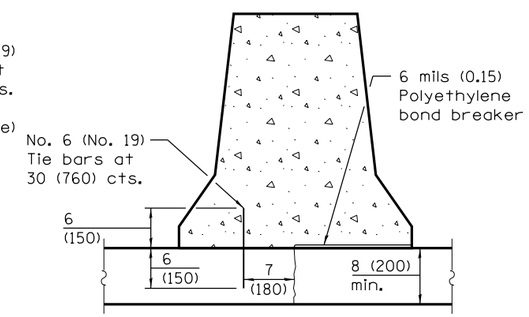


**EXISTING PCC BASE WITH LONGITUDINAL JOINT**

**ANCHORING METHODS**

## GENERAL NOTES

The Variable Cross-Section shall be used when there is a difference in elevation between the two sides of the barrier.

See standard 836006 for light pole foundation details where required in concrete barrier.

All dimensions are in inches (millimeters) unless otherwise shown.

Illinois Department of Transportation

PASSED January 1, 2013
Michael Brand
ENGINEER OF POLICY AND PROCEDURES
APPROVED January 1, 2013
ENGINEER OF DESIGN AND ENVIRONMENT

ISSUED 1-1-97

| DATE | REVISIONS |
|---|---|
| 1-1-13 | Revised general note to |
| | reference standard 836006 |
| | for light pole foundation. |
| 1-1-09 | Switched units to |
| | English (metric). |
| | |

# CONCRETE BARRIER, DOUBLE FACE, 32 in. (815 mm) HEIGHT

(Sheet 1 of 2)

**STANDARD 637001–05**

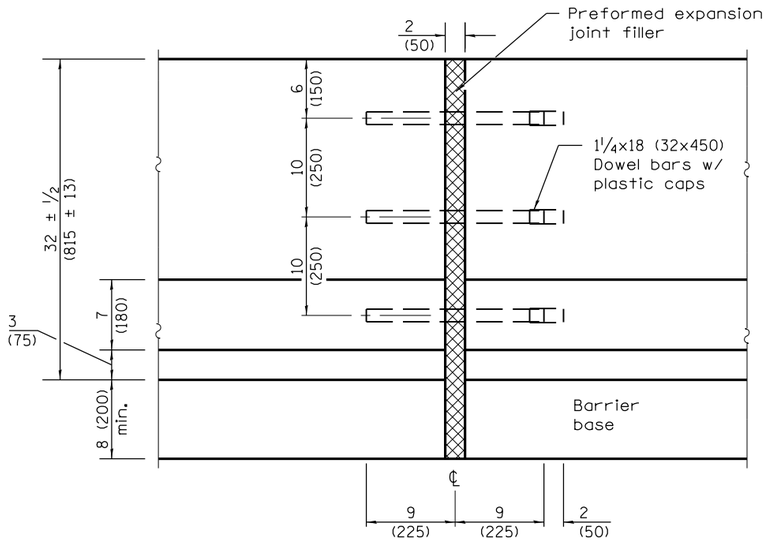


## EXPANSION JOINT

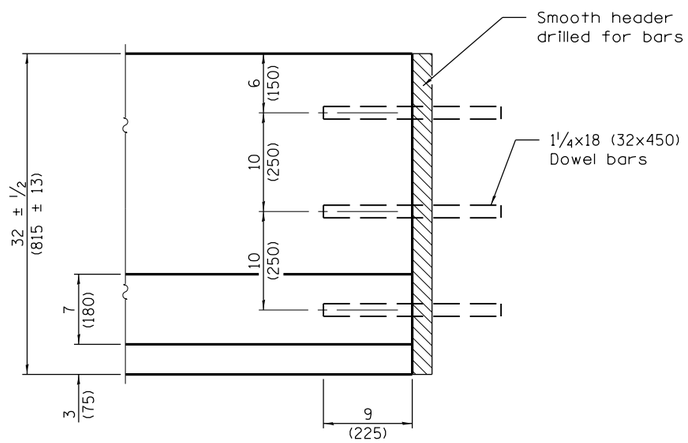


## CONSTRUCTION JOINT

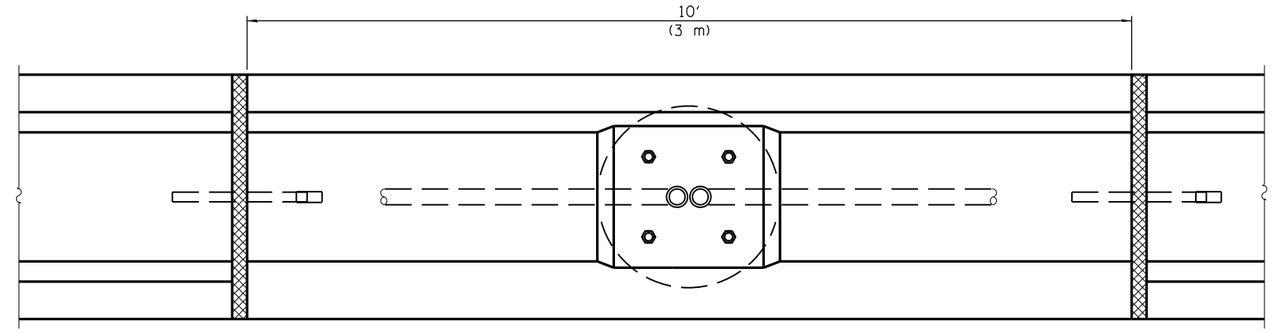


## PLAN AT LIGHTING FOUNDATION

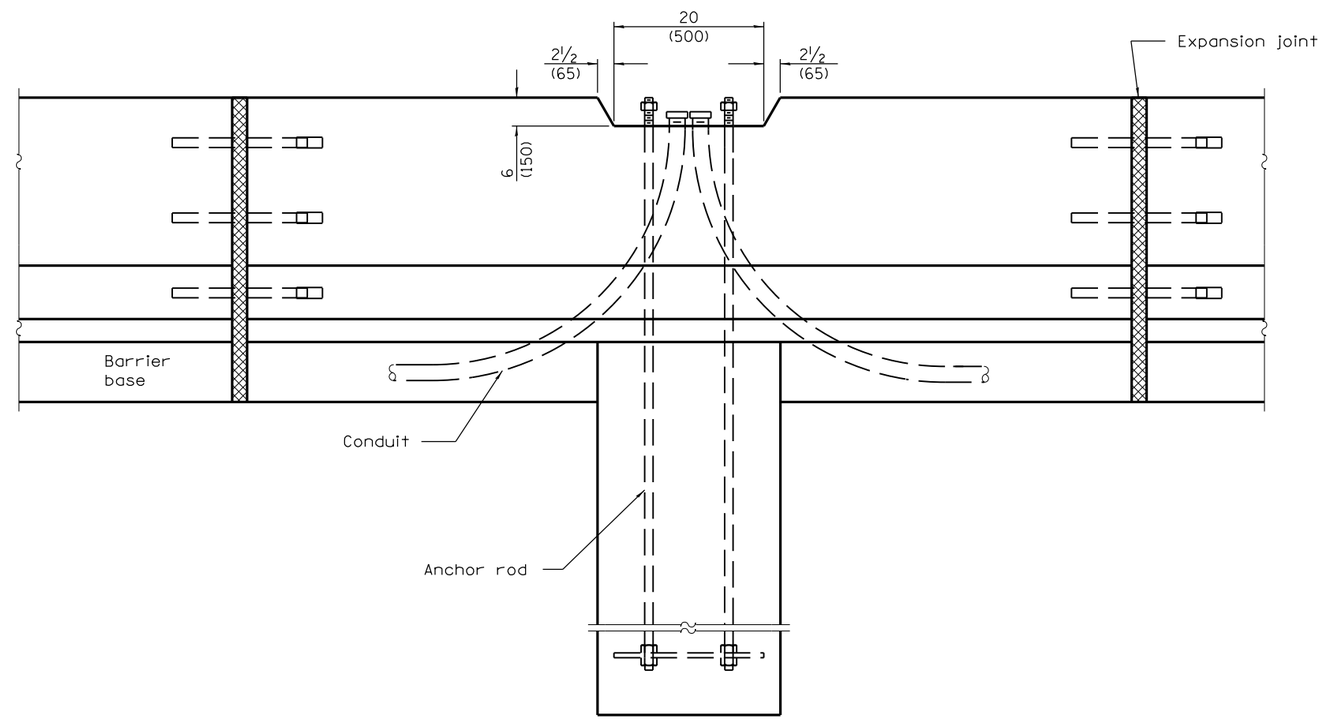


## ELEVATION AT LIGHTING FOUNDATION

Illinois Department of Transportation

PASSED January 1, 2013

Michael Brand

ENGINEER OF POLICY AND PROCEDURES

APPROVED January 1, 2013

ENGINEER OF DESIGN AND ENVIRONMENT

ISSUED 1-1-97

# CONCRETE BARRIER, DOUBLE FACE, 32 in. (815 mm) HEIGHT

(Sheet 2 of 2)

STANDARD 637001–05

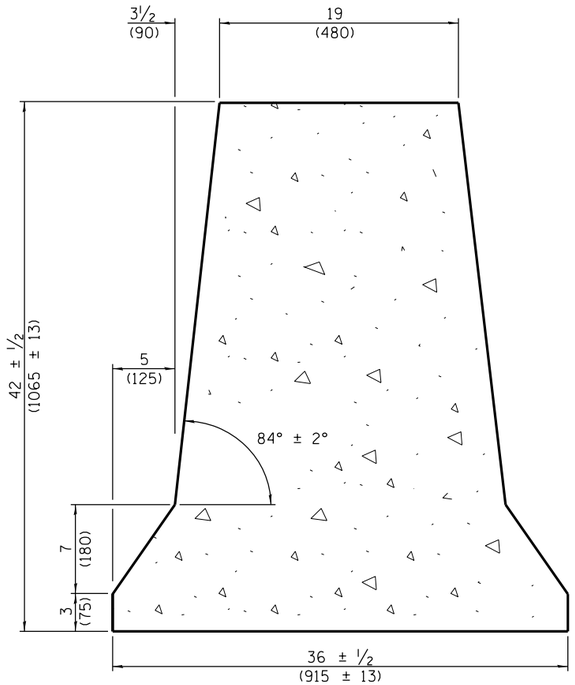


**TYPICAL CROSS-SECTION**

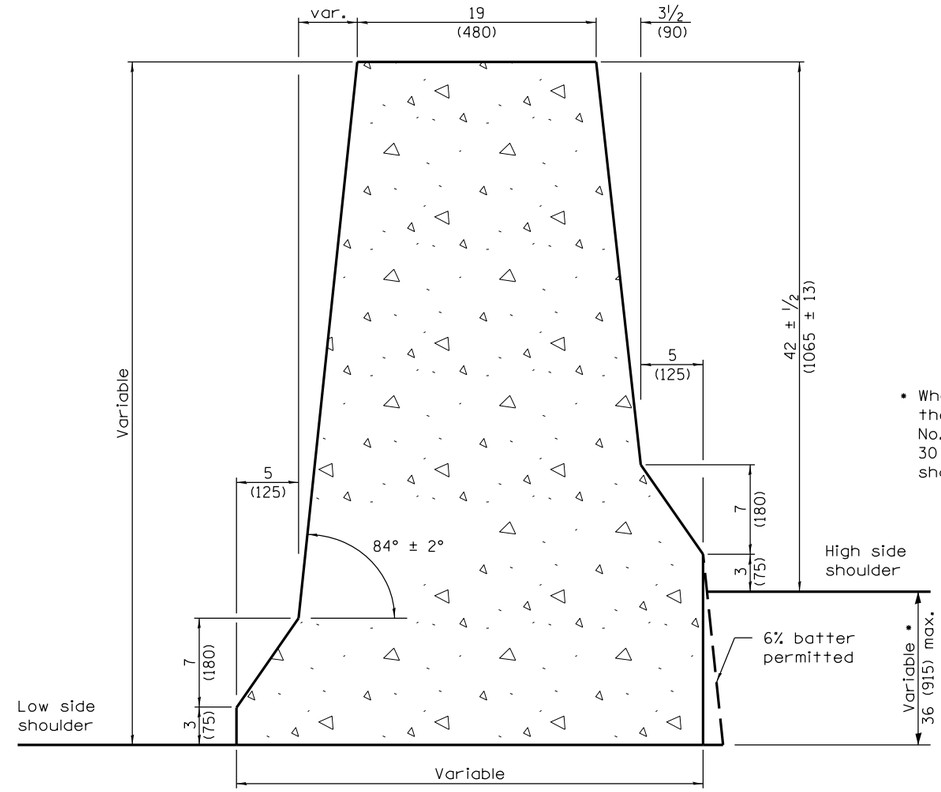


• When this dimension exceeds 12 (300), the barrier may be cast in two pours. No. 6 x 12 (No. 19 x 300) tie bars at 30 (760) centers, or a suitable keyway, shall be used between the pours.

**VARIABLE CROSS-SECTION**

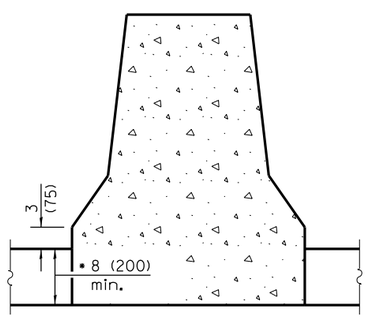


**NEW MONOLITHIC PCC BASE**

• This dimension shall be 10 (250) minimum when the barrier is confined by earth.

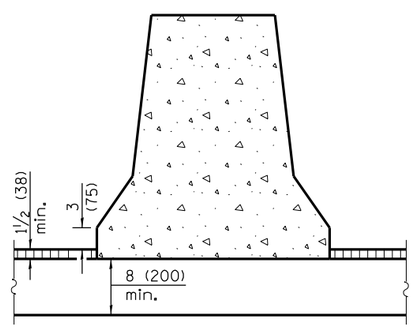


**NEW OR EXISTING BIT./PCC BASE WITH OVERLAY CONFINEMENT**

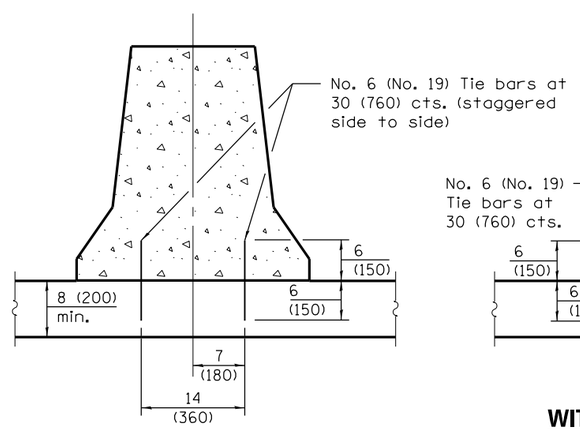


**NEW OR EXISTING PCC BASE**

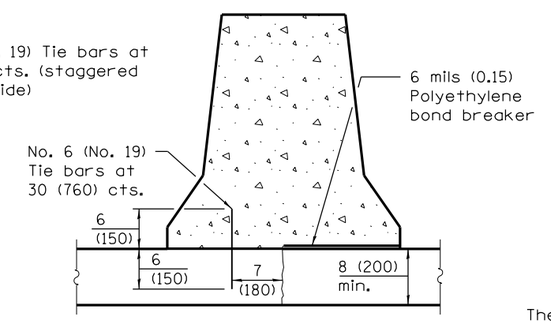


**EXISTING PCC BASE WITH LONGITUDINAL JOINT**

## GENERAL NOTES

The Variable Cross-Section shall be used when there is a difference in elevation between the two sides of the barrier.

See standard 836011 for light pole foundation details where required in concrete barrier.

All dimensions are in inches (millimeters) unless otherwise shown.

**ANCHORING METHODS**

Illinois Department of Transportation

PASSED January 1, 2013
Michael Brand
ENGINEER OF POLICY AND PROCEDURES
APPROVED January 1, 2013
ENGINEER OF DESIGN AND ENVIRONMENT

ISSUED 1-1-04

| DATE | REVISIONS |
|---|---|
| 1-1-13 | Revised general note to |
| | reference standard 836011 |
| | for light pole foundation. |
| 1-1-09 | Switched units to |
| | English (metric). |
| | |

# CONCRETE BARRIER, DOUBLE FACE, 42 in. (1065 mm) HEIGHT

(Sheet 1 of 2)

**STANDARD 637006-03**

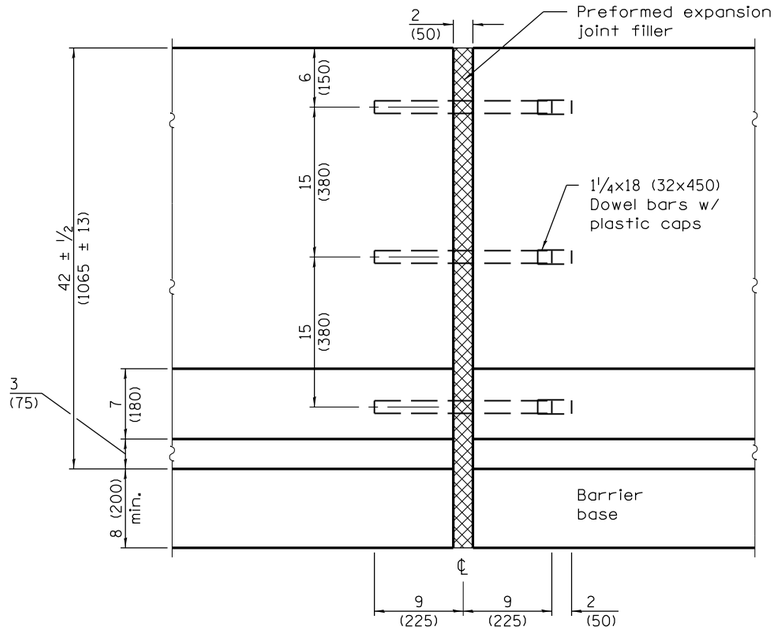


**EXPANSION JOINT**

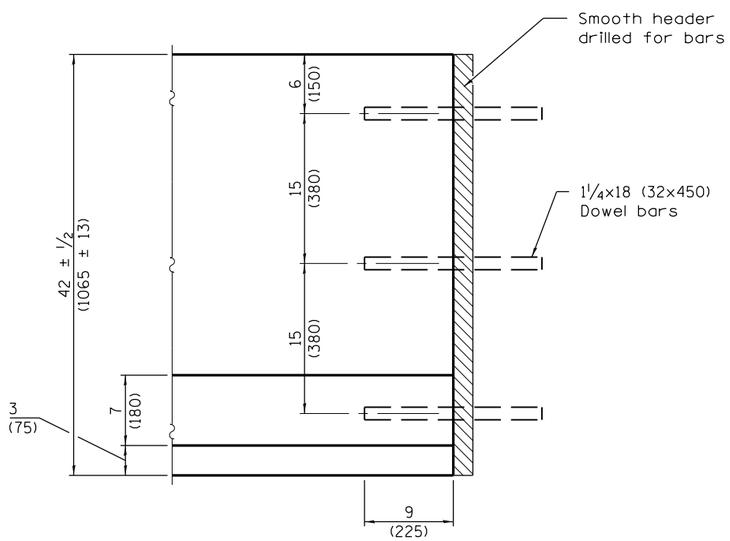


**CONSTRUCTION JOINT**

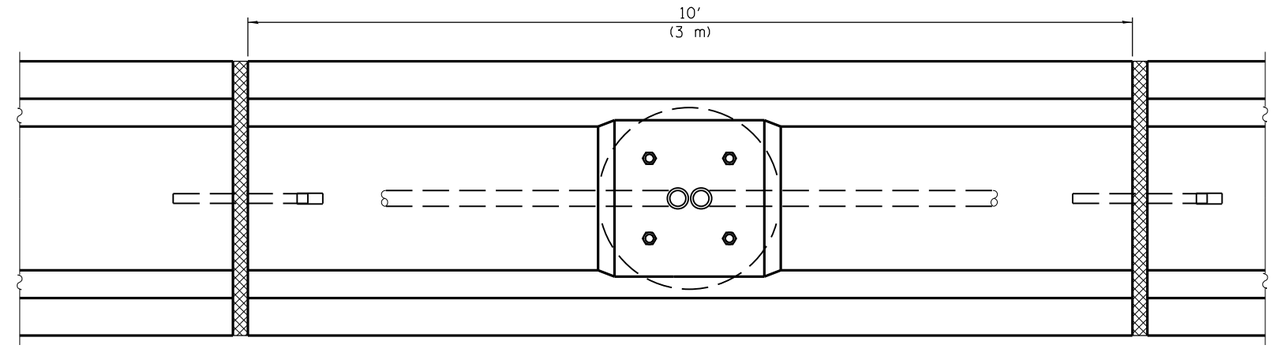


**PLAN AT LIGHTING FOUNDATION**

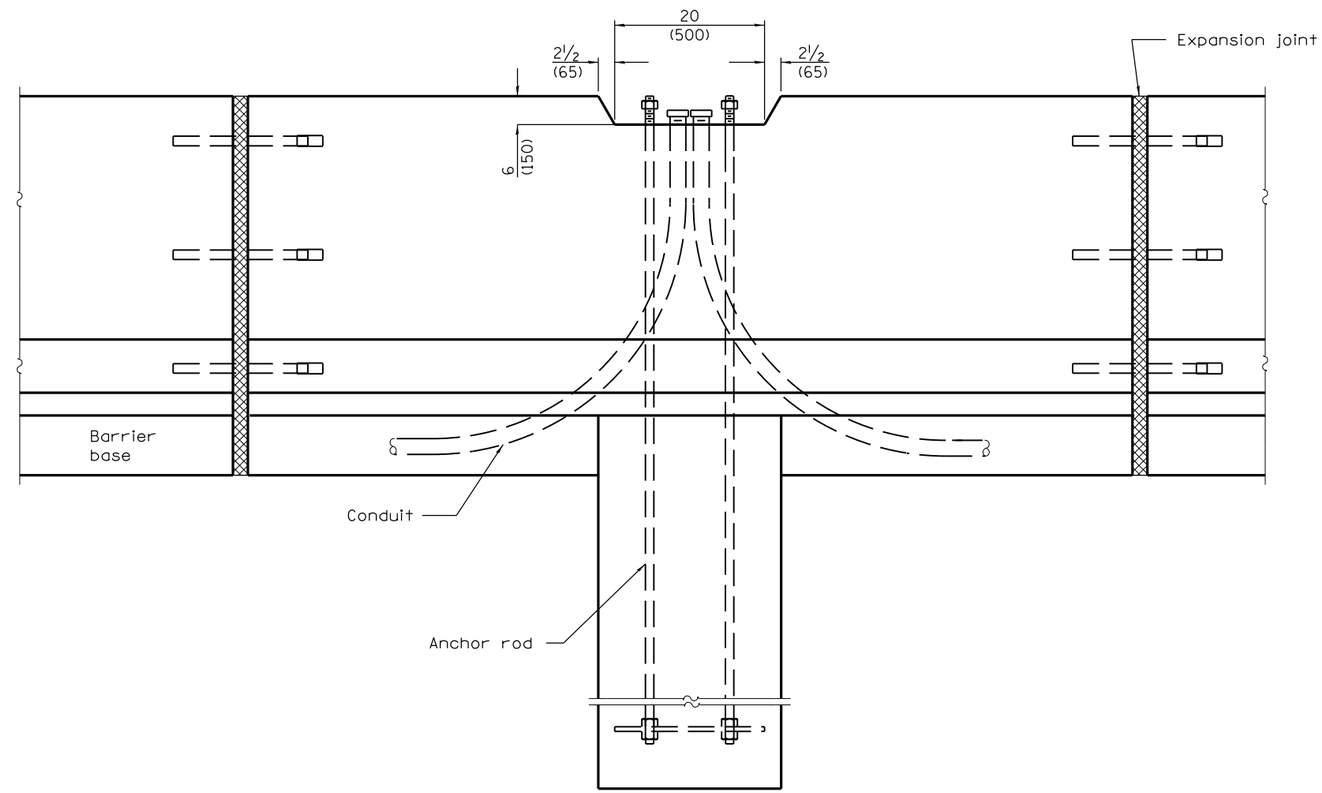


**ELEVATION AT LIGHTING FOUNDATION**

Illinois Department of Transportation

PASSED January 1, 2013

Michael Brand

ENGINEER OF POLICY AND PROCEDURES

APPROVED January 1, 2013

ENGINEER OF DESIGN AND ENVIRONMENT

ISSUED 1-1-04

# CONCRETE BARRIER, DOUBLE FACE, 42 in. (1065 mm) HEIGHT

(Sheet 2 of 2)

**STANDARD 637006–03**

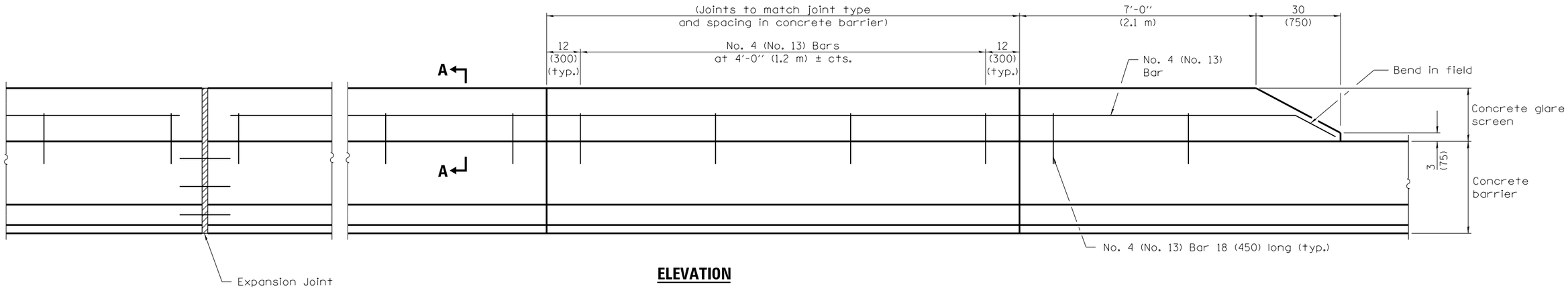


**ELEVATION**

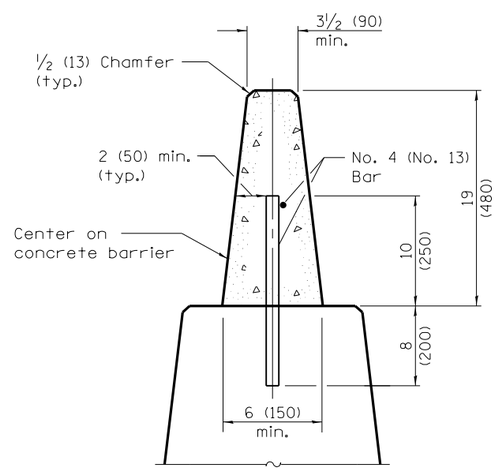


**SECTION A–A**

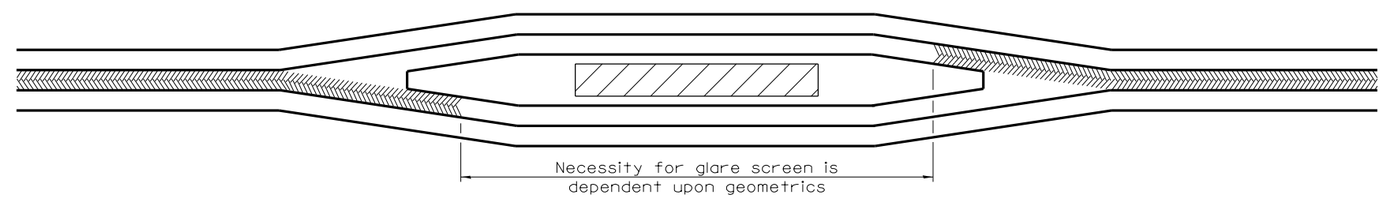


**TYPICAL APPLICATION AT MEDIAN OBSTRUCTIONS**

Glare Screen

All dimensions are in inches (millimeters)
unless otherwise shown.

Illinois Department of Transportation

PASSED January 1, 2009
ENGINEER OF POLICY AND PROCEDURES
APPROVED January 1, 2009
ENGINEER OF DESIGN AND ENVIRONMENT

ISSUED 1-1-97

| DATE | REVISIONS |
|---|---|
| 1-1-09 | Switched units to |
| | English (metric). |
| | |
| 1-1-04 | Revised for F shape |
| | barrier. |
| | |

# CONCRETE GLARE SCREEN

**STANDARD 638101–02**

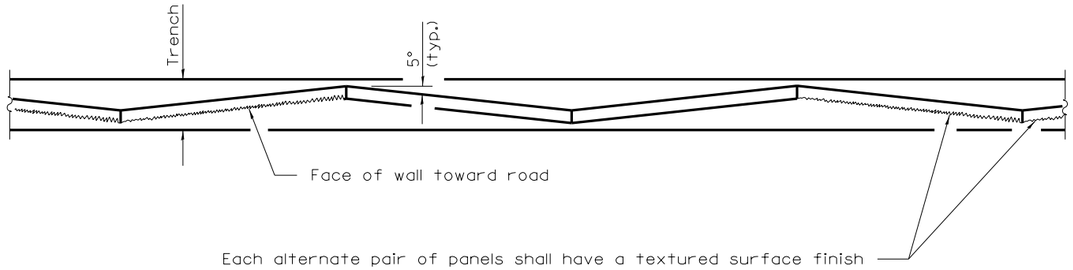


**PLAN**

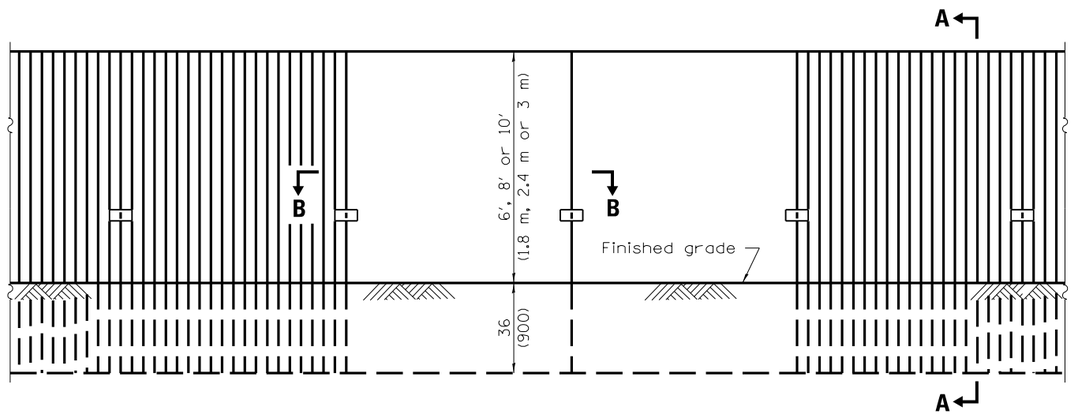


**ELEVATION**

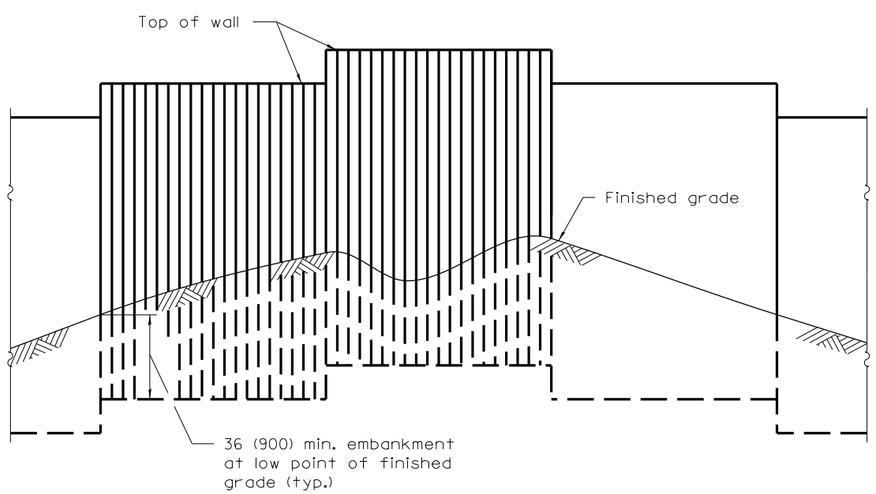


**ELEVATION**

(Showing installation of wall in irregular ground)

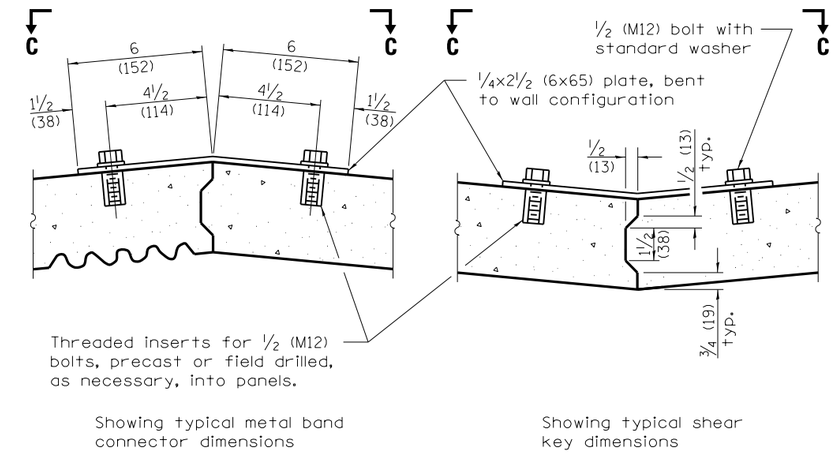


**SECTION B–B**

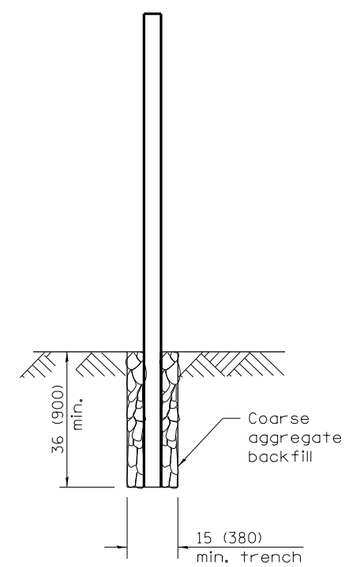


**SECTION A–A**

## GENERAL NOTES

Loading for 80 mph (130 km/h) wind with 30% gust factor, normal to wall.

ALLOWABLE STRESSES:

| | |
|---|---|
| Concrete: | f'c = 3,500 psi (24 MPa) |
| | f'ci = 2,250 psi (15 MPa) |
| Prestressing Steel: | f's = 270,000 psi (1860 MPa) |
| | fsi = 189,000 psi (1300 MPa) |
| Reinforcing Steel: | f'y = 40,000 psi min. (270 MPa) |
| Structural Steel: | fs = 20,000 psi (138 MPa) |
| Minimum allowable soil bearing pressure: | = 1.25 tsf (120 kPa) |

All dimensions are in inches (millimeters) unless otherwise shown.

Illinois Department of Transportation

APPROVED January 1, 2009
Ralph E. Anderson
ENGINEER OF BRIDGES AND STRUCTURES

APPROVED January 1, 2009
Gen E. Hou
ENGINEER OF DESIGN AND ENVIRONMENT

ISSUED 1-1-97

| DATE | REVISIONS |
|---|---|
| 1-1-09 | Switched units to |
| | English (metric). |
| | |
| 1-1-07 | Soft converted metric |
| | reinforcement bars & |
| | corrected dimensions. |

# SIGHT SCREEN PRECAST PRESTRESSED CONCRETE PANEL WALL

(Sheet 1 of 2)

**STANDARD 639001–02**

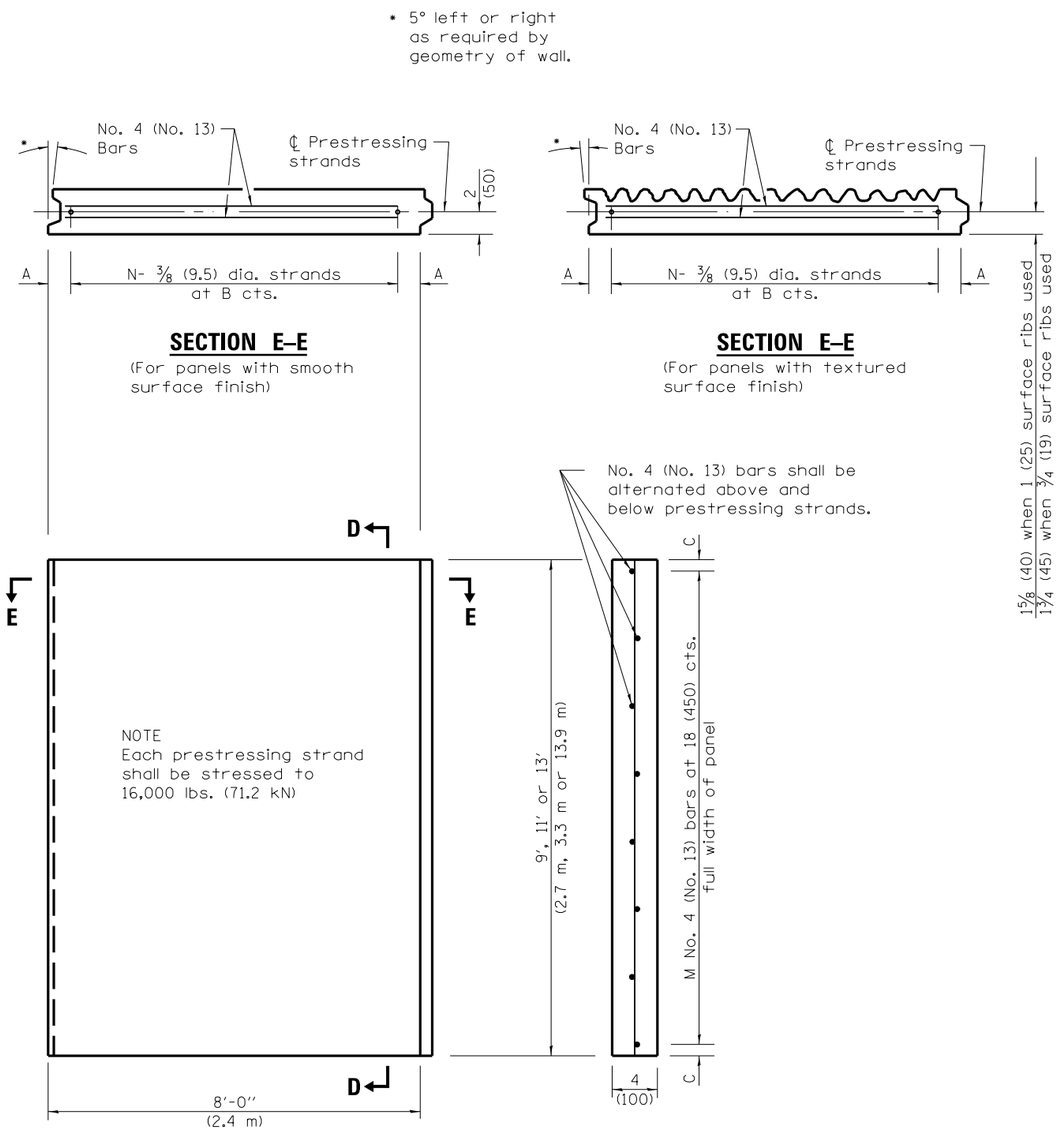


## STRAND and REINFORCEMENT LAYOUT

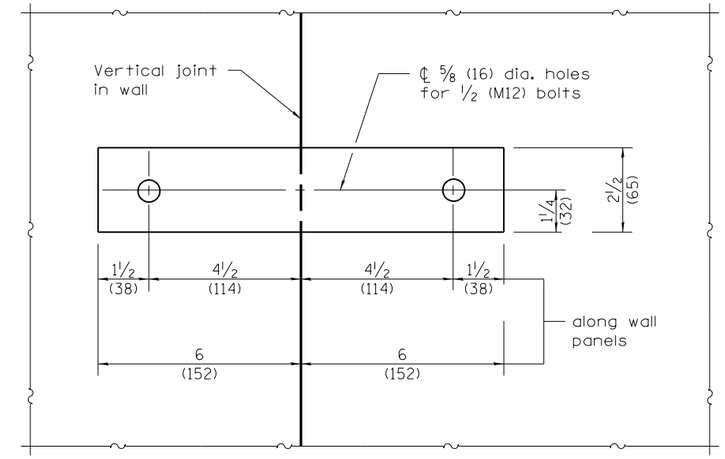


## SECTION C–C

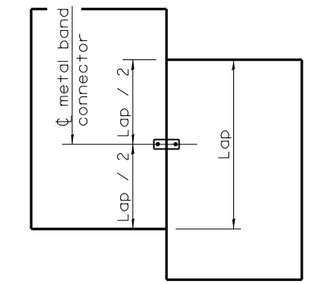


## PANEL ELEVATION

(Showing location of metal band connector)

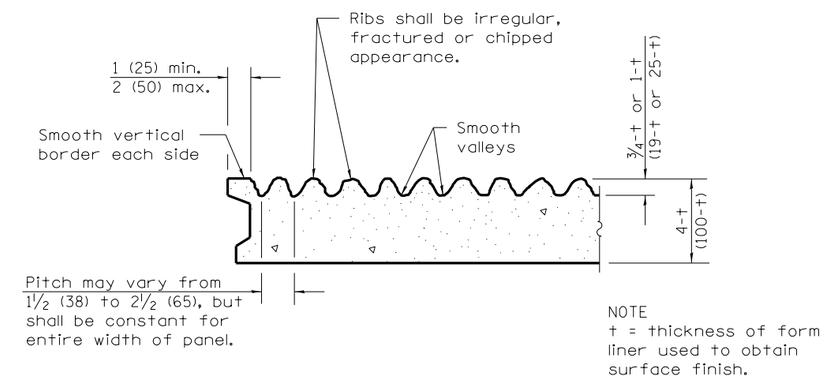


## TEXTURED SURFACE FINISH DETAIL

| Nominal Panel Size | A | N | B | C | M |
|---|---|---|---|---|---|
| 8'-0" x 9'-0" (2.4 m x 2.7 m) | 6 (150) | 8 | 12 (300) | 9 (225) | 6 |
| 8'-0" x 11'-0" (2.4 m x 3.3 m) | 3 (75) | 11 | 9 (225) | 3 (75) | 8 |
| 8'-0" x 13'-0" (2.4 m x 3.9 m) | 3 (75) | 16 | 6 (150) | 6 (150) | 9 |

Illinois Department of Transportation

APPROVED January 1, 2009
Ralph E. Anderson
ENGINEER OF BRIDGES AND STRUCTURES

APPROVED January 1, 2009
Eric E. Harm
ENGINEER OF DESIGN AND ENVIRONMENT

ISSUED 1-1-97

# SIGHT SCREEN PRECAST PRESTRESSED CONCRETE PANEL WALL

(Sheet 2 of 2)

STANDARD 639001–02

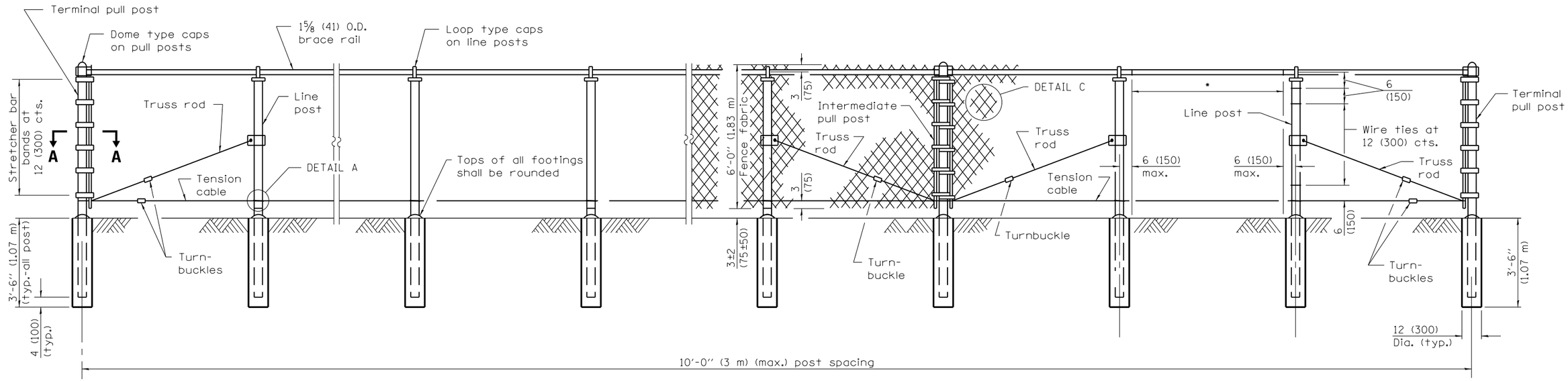


## ELEVATION – 6' (1.83 m) FENCE

(Looking toward highway)

| FENCE HEIGHT | POST SECTION (O.D.) | lbs./ft. (kg/m) |
|---|---|---|
| 6 ft. (1.83 m) | 4 (102) | 9.11 (13.6) |
| 8 ft. (2.43 m) | 4 (102) | 12.51 (18.6) |
| 10 ft. (3.05 m) | 4 (102) | 22.85 (34) |

Post sizes other than those shown may be used subject to approval by the Engineer.

* Fence fabric shall be tied to all line posts, tension cable and brace rails with 9 ga. (3.76) wire ties at 12 (300) cts.

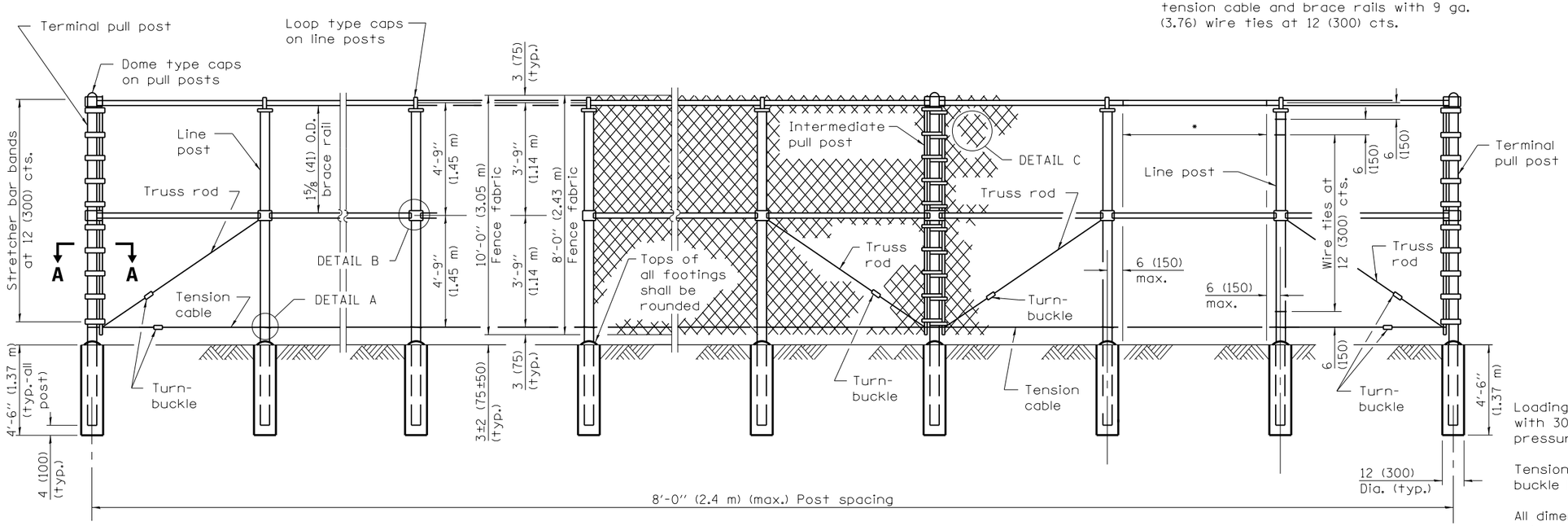


## ELEVATION – 8' (2.43 m) & 10' (3.05 m) FENCES

(Looking toward highway)

## GENERAL NOTES

Loading for wind 80 mph (130 km/h) with 30% gust factor. Minimum allowable soil pressure = 1.25 tsf (120 kPa).

Tension cable shall be provided with one turn buckle between each pair of pull posts.

All dimensions are in inches (millimeters) unless otherwise shown.

Illinois Department of Transportation

APPROVED January 1, 2009
Ralph E. Anderson
ENGINEER OF BRIDGES AND STRUCTURES

APPROVED January 1, 2009
ENGINEER OF DESIGN AND ENVIRONMENT

ISSUED 1-1-97

| DATE | REVISIONS |
|---|---|
| 1-1-09 | Switched units to |
| | English (metric). |
| | Revised General Notes. |
| | |
| 1-1-97 | Renum. Standard 2365-6. |
| | |

# SIGHT SCREEN CHAIN LINK FENCE

(Sheet 1 of 2)

**STANDARD 640001–01**

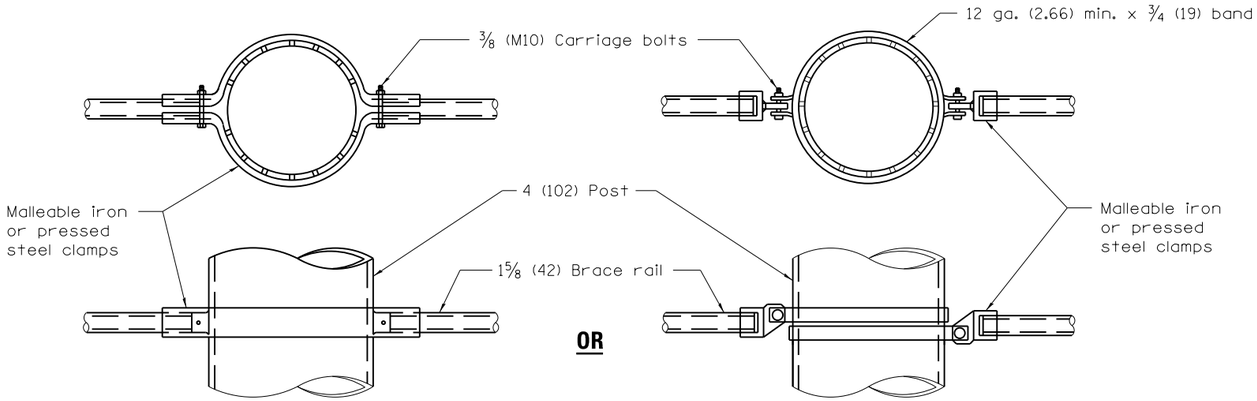


**DETAIL B**

(Showing typical method of attaching middle brace rails to posts.)

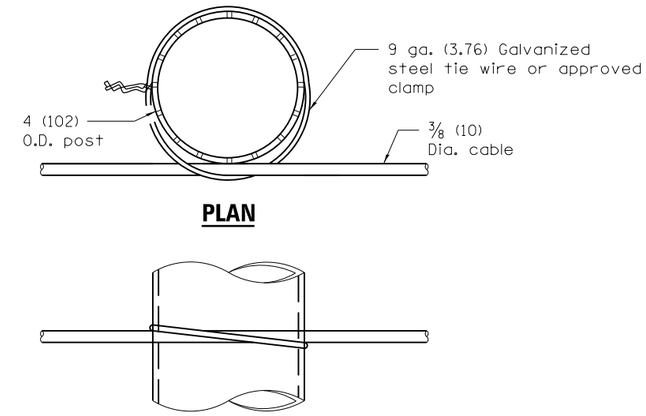


**DETAIL A**

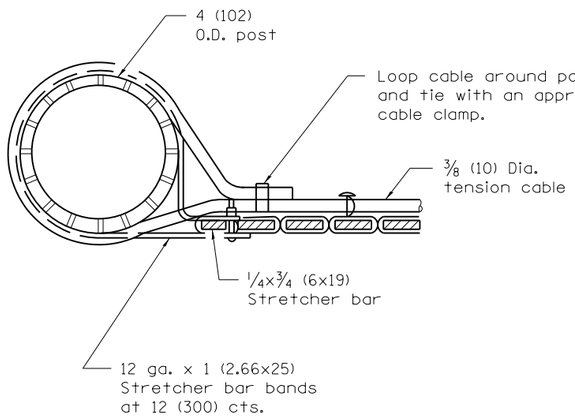


**SECTION A–A**

(Showing method of fastening bottom tension cable and fence fabric to pull posts.)

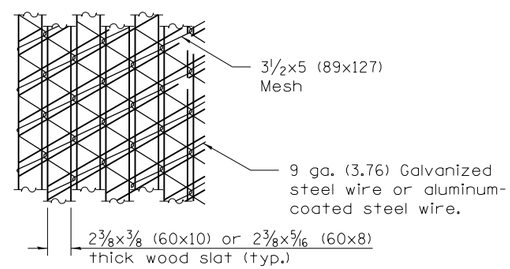


**DETAIL OF FABRIC**

(Looking from highway)

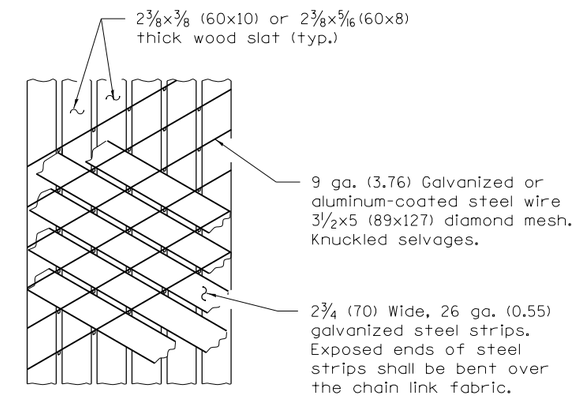


**DETAIL C**

(Looking toward highway)

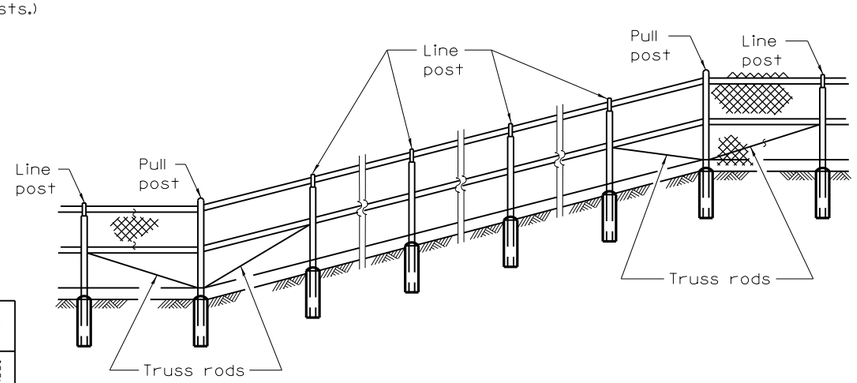


**FENCE INSTALLATION ON SLOPES**

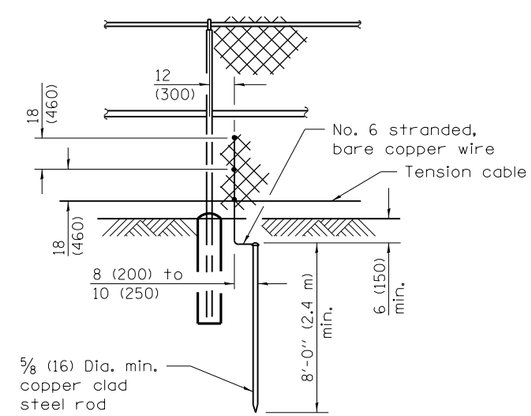


**PROTECTIVE ELECTRICAL GROUND**

Illinois Department of Transportation

APPROVED January 1, 2009
ENGINEER OF BRIDGES AND STRUCTURES

APPROVED January 1, 2009
ENGINEER OF DESIGN AND ENVIRONMENT

ISSUED 1-1-97

# SIGHT SCREEN CHAIN LINK FENCE

(Sheet 2 of 2)

**STANDARD 640001–01**

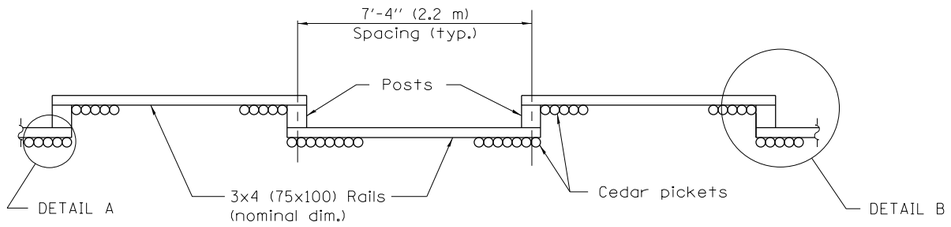


**PLAN**
(Facing highway)

| | FENCE HEIGHT | |
|---|---|---|
| | 6'-0" (1.8 m) | 8'-0" (2.4 m) |
| Post Size (nominal dim.) | 6x8 (150x200) | 8x8 (200x200) |
| Post Length | 10'-0" (3.0 m) | 14'-0" (4.3 m) |
| Post Embedment | 4'-0" (1.2 m) | 6'-0" (1.8 m) |
| A | 15 (380) | 18 (460) |
| B | 24 (600) | 33 (870) |
| C | 24 (600) | 33 (870) |
| D | 12 (300) | 15 (380) |

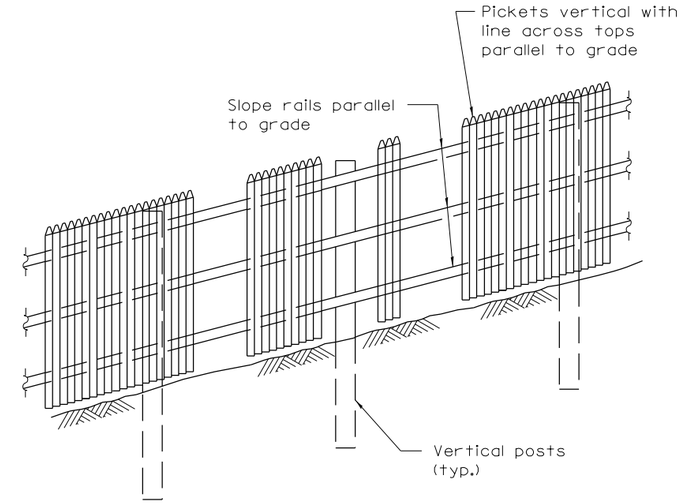


**ELEVATION**
(Showing treatment with sloping ground)

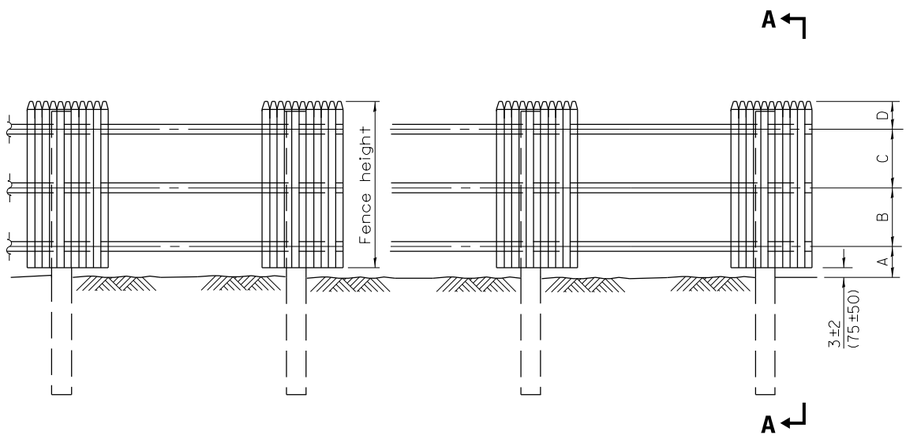


**ELEVATION**

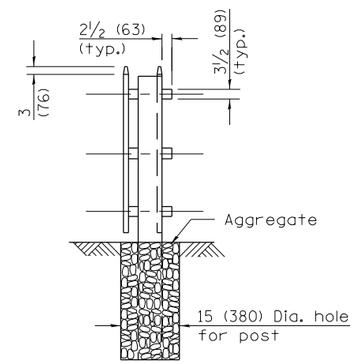


**SEC. A–A**

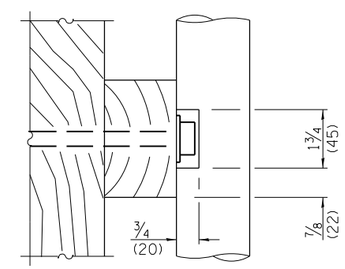


**SECTION B–B**
(Notch pickets when required to clear washer and bolt head.)

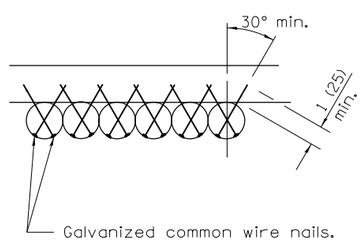


**DETAIL A**
(Showing typical picket to rail attachment)

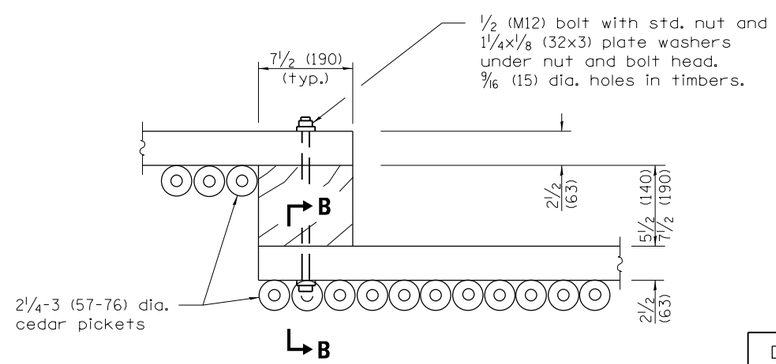


**DETAIL B**
(Showing typical panel to post connection at each rail.)

## GENERAL NOTES

Loading is based on 80 mph (130 km/h) with 30% gust factor. Minimum allowable soil pressure = 1.25 tsf (120 kPa).

All dimensions are in inches (millimeters) unless otherwise shown.

Illinois Department of Transportation

APPROVED January 1, 2009
Ralph E. Anderson
ENGINEER OF BRIDGES AND STRUCTURES

APPROVED January 1, 2009
ENGINEER OF DESIGN AND ENVIRONMENT

ISSUED 1-1-97

| DATE | REVISIONS |
|---|---|
| 1-1-09 | Switched units to |
| | English (metric). Changed |
| | Sec. B-B to Detail B. |
| 1-1-97 | Renum. Standard 2367-3. |
| | Deleted DN Symbol. |
| | |

# SIGHT SCREEN CEDAR STOCKADE FENCE TYPE S

**STANDARD 641001–01**

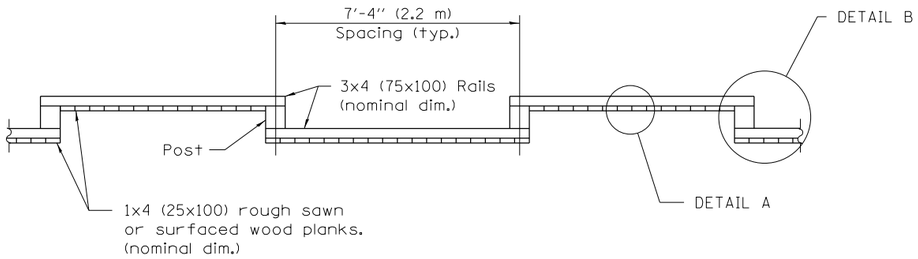


**PLAN**
(Facing highway)

| | FENCE HEIGHT | |
|---|---|---|
| | 6′-0″ (1.8 m) | 8′-0″ (2.4 m) |
| Post Size (nominal dim.) | 6x8 (150x200) | 8x8 (200x200) |
| Post Length | 10′-0″ (3.0 m) | 14′-0″ (4.3 m) |
| Post Embedment | 4′-0″ (1.2 m) | 6′-0″ (1.8 m) |
| A | 15 (380) | 18 (460) |
| B | 24 (600) | 33 (870) |
| C | 24 (600) | 33 (870) |
| D | 12 (300) | 15 (380) |

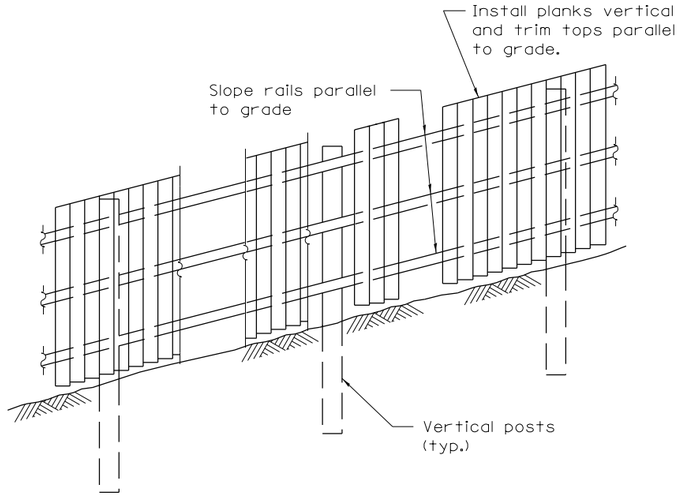


**ELEVATION**
(Showing treatment with sloping ground)

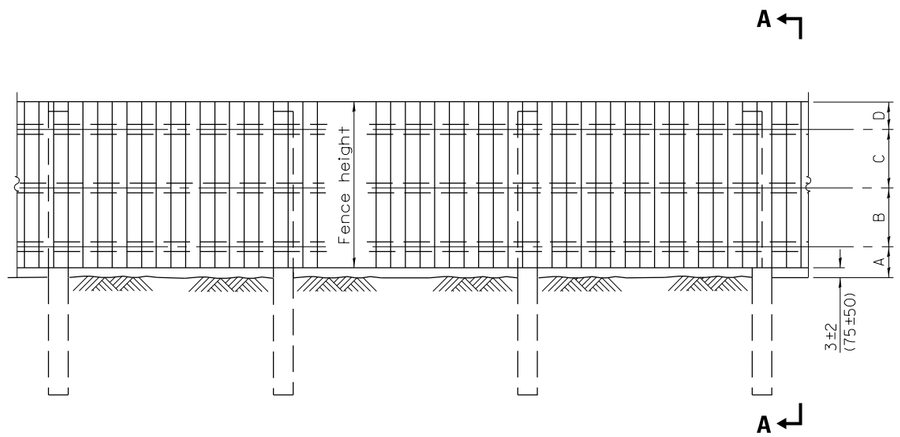


**ELEVATION**

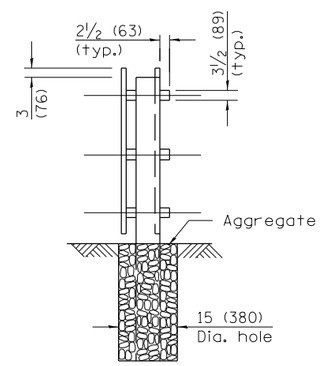


**SEC. A–A**

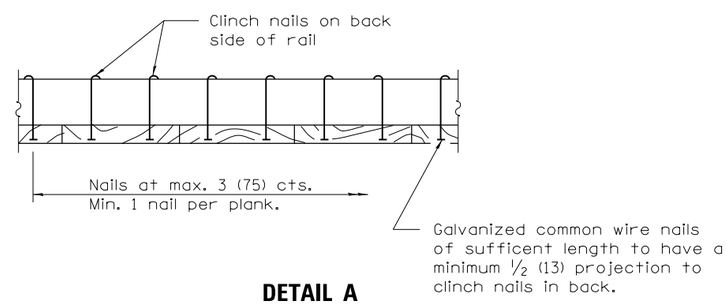


**DETAIL A**
(Showing typical plank to
rail attachment each rail.)

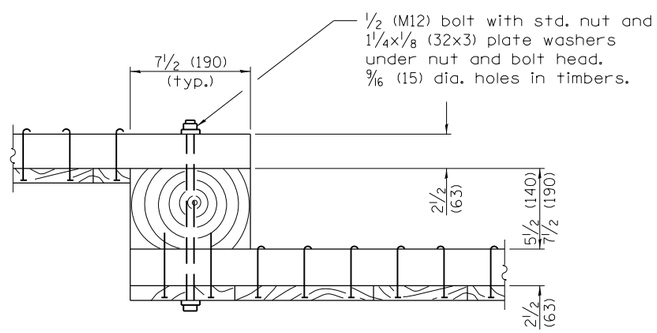


**DETAIL B**
(Showing typical panel to
post connection details)

## GENERAL NOTES

Loading was based on 80 mph (130 km/h) with 30% gust factor. Minimum allowable soil pressure = 1.25 tsf (120 kPa).

All dimensions are in inches (millimeters) unless otherwise shown.

Illinois Department of Transportation

APPROVED January 1, 2009
Ralph E. Anderson
ENGINEER OF BRIDGES AND STRUCTURES

APPROVED January 1, 2009
Gen E Han
ENGINEER OF DESIGN AND ENVIRONMENT

ISSUED 1-1-97

| DATE | REVISIONS |
|---|---|
| 1-1-09 | Switched units to |
| | English (metric). Changed |
| | Section B-B to Detail B. |
| 1-1-97 | Renum. Standard 2367-3. |
| | Deleted DN Symbol. |
| | |

# SIGHT SCREEN WOOD PLANK FENCE TYPE P

**STANDARD 641006–01**

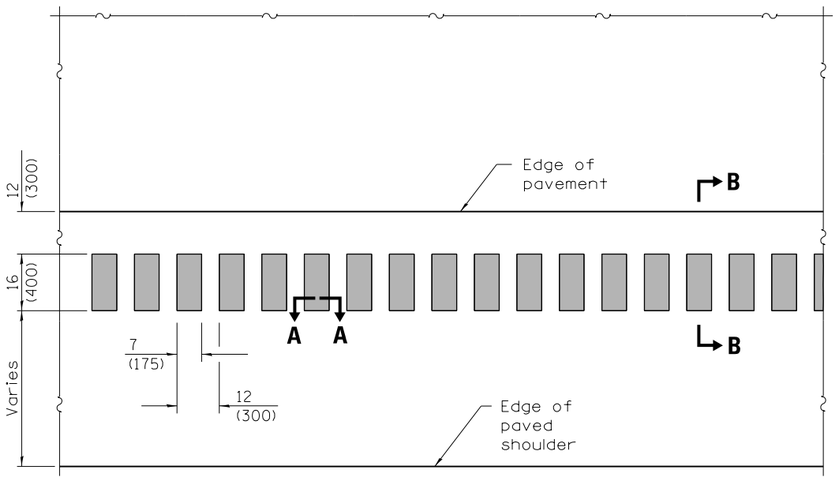


**PLAN**

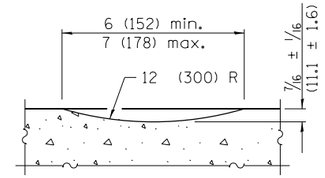


**SECTION A–A**

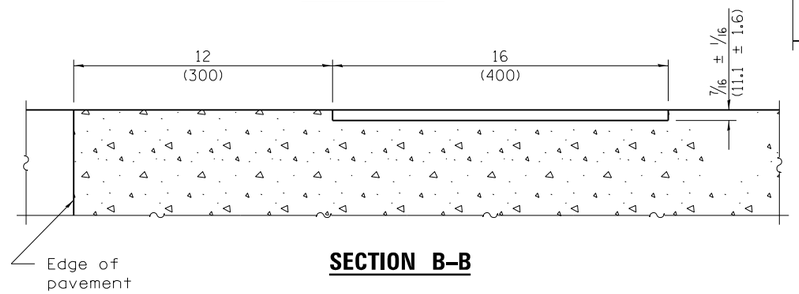


**SECTION B–B**

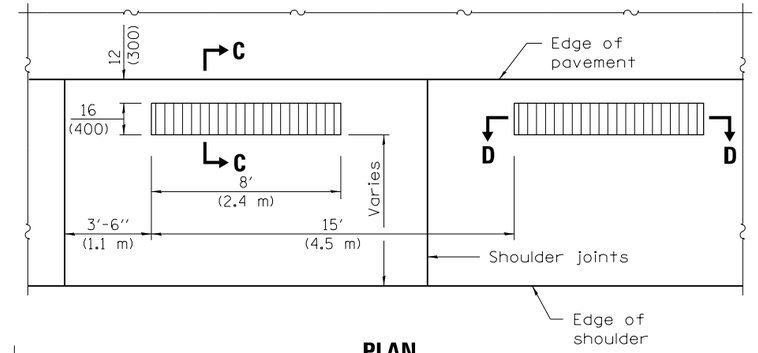


**PLAN**

(Formed Alternate for PCC Shoulders)

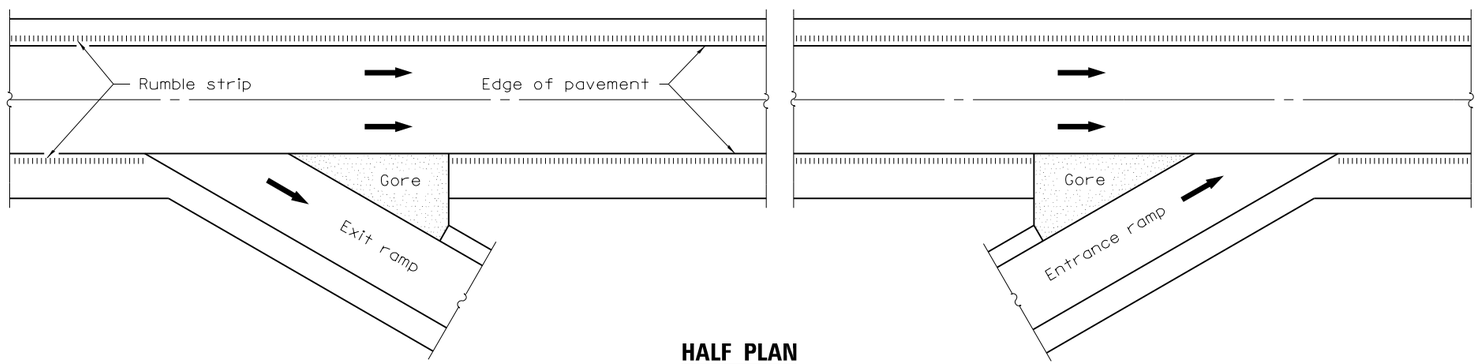


**HALF PLAN**

**TYPICAL APPLICATION AT AN INTERCHANGE**

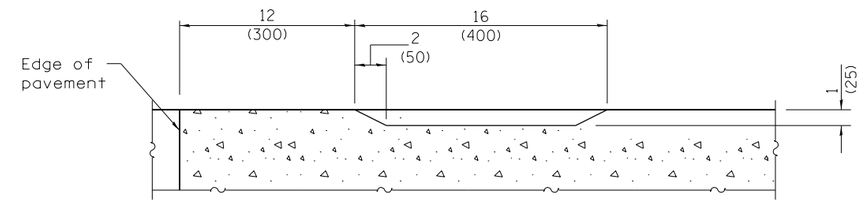


**SECTION C–C**

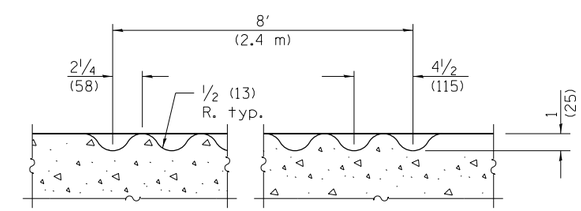


**SECTION D–D**

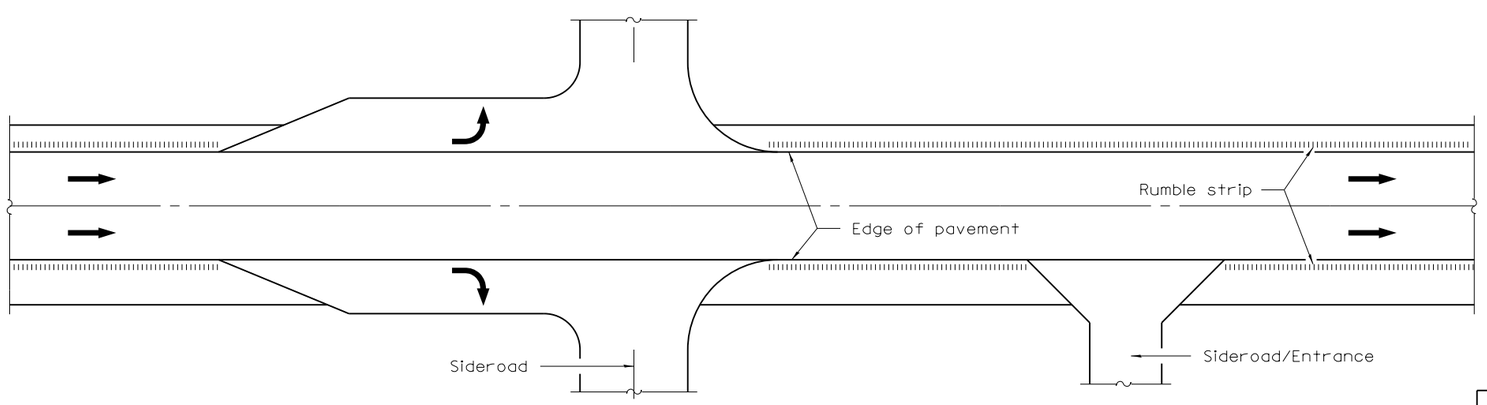


**HALF PLAN**

**TYPICAL APPLICATION AT AN INTERSECTION OR ENTRANCE**

## GENERAL NOTES

On Portland cement concrete shoulders, no shoulder rumble strip shall be located closer than 6 (150) to a transverse joint.

Omit shoulder rumble strips across structures.

All dimensions are in inches (millimeters) unless otherwise shown.

Illinois Department of Transportation

PASSED January 1, 2012
Michael Brand
ENGINEER OF POLICY AND PROCEDURES

APPROVED January 1, 2012
Scott E. Stokes
ENGINEER OF DESIGN AND ENVIRONMENT

ISSUED 1-1-03

| DATE | REVISIONS |
|---|---|
| 1-1-12 | Changed formed rumble strip |
| | to 16 (400) wide. Rev'd milled |
| | strip. Renamed standard. |
| 1-1-09 | Switched units to |
| | English (metric). |
| | |

# SHOULDER RUMBLE STRIPS, 16 in.

**STANDARD 642001–02**

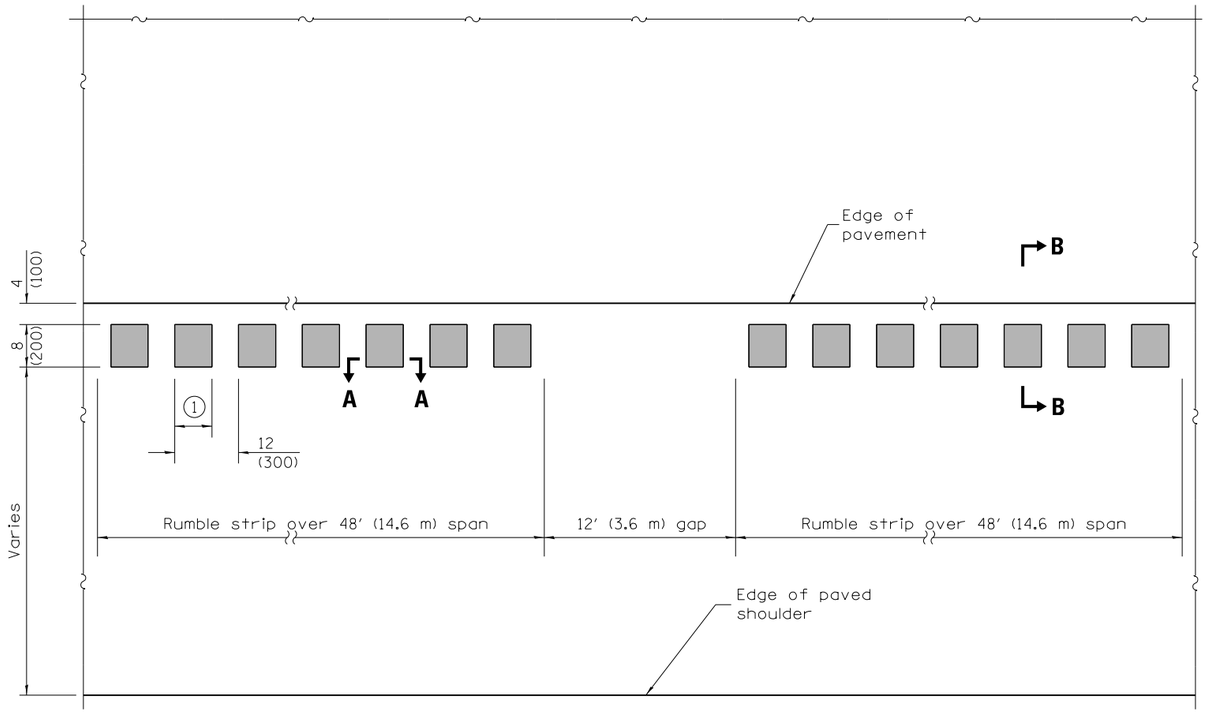


## PLAN

1 See Section A-A.

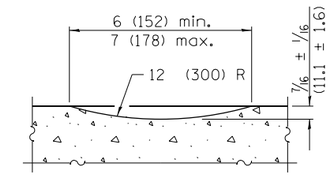


## SECTION A–A

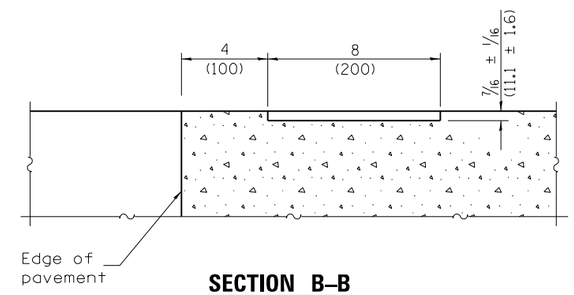


## SECTION B–B

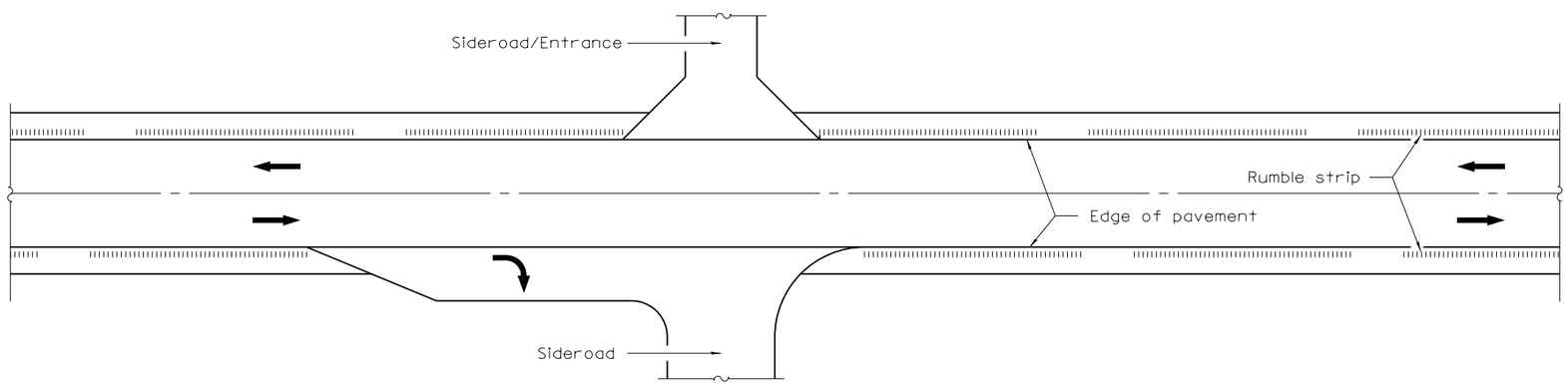


## TYPICAL APPLICATION AT AN INTERSECTION OR ENTRANCE

### GENERAL NOTES

Omit shoulder rumble strips across structures and at mailbox turnouts.

All dimensions are in inches (millimeters) unless otherwise shown.

Illinois Department of Transportation

PASSED January 1, 2012
Michael Brand
ENGINEER OF POLICY AND PROCEDURES

APPROVED January 1, 2012
Scott E. Stokes
ENGINEER OF DESIGN AND ENVIRONMENT

ISSUED 1-1-12

| DATE | REVISIONS |
|---|---|
| 1-1-12 | New standard. |
| | |
| | |
| | |
| | |
| | |

# SHOULDER RUMBLE STRIPS, 8 in.

STANDARD 642006

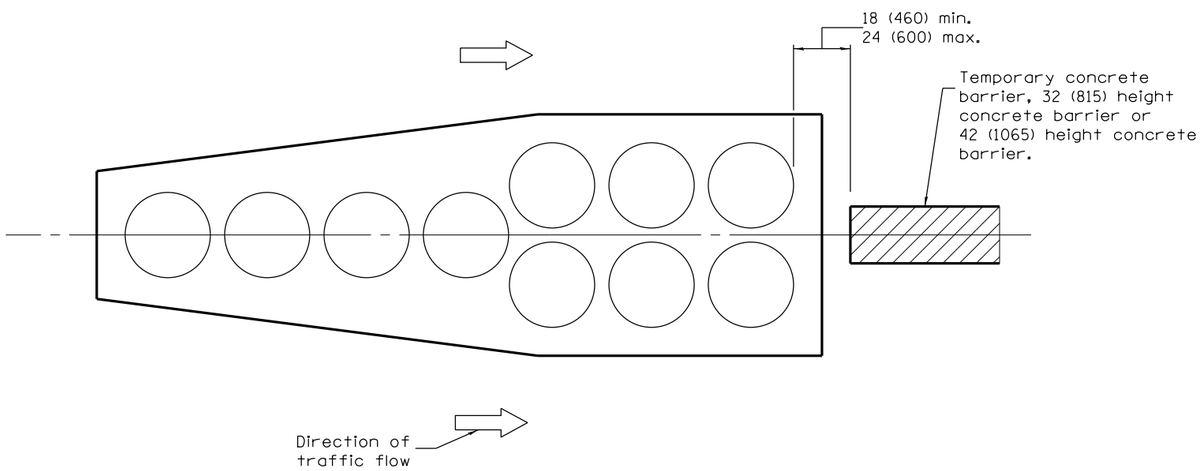


## GORE INSTALLATION

(Traffic approaches on both sides)
(Test Level 2 array shown)

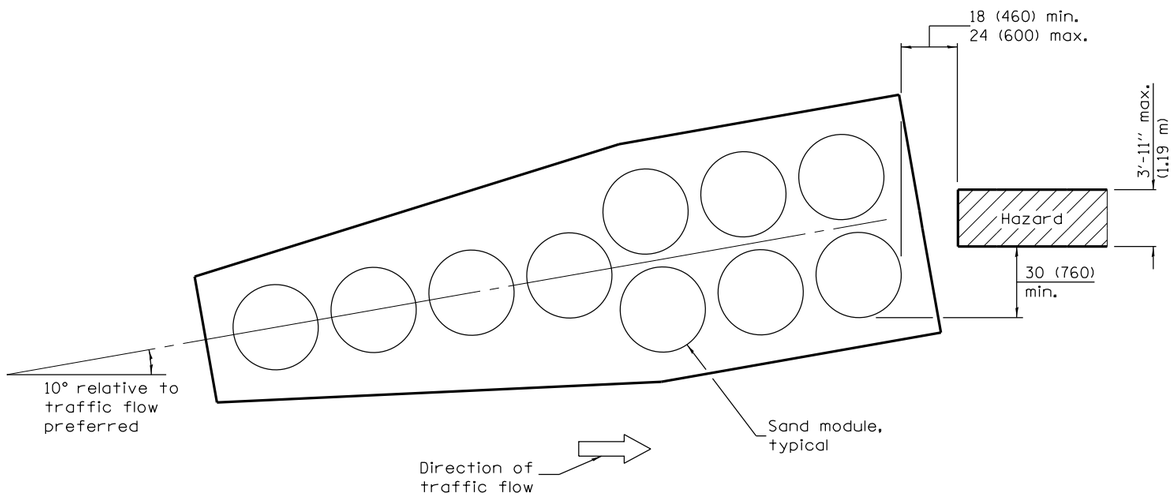


## ROADSIDE INSTALLATION

(Traffic approaches on one side)
(Test Level 2 array shown)

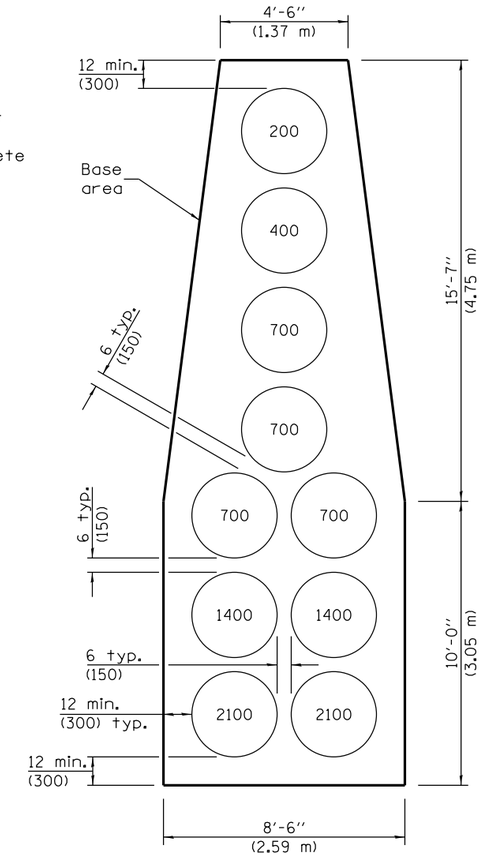


## TEST LEVEL 2 ARRAY

(For design speed less than or equal to 45 mph.)
(Numbers inside sand modules indicate sand weight in pounds.)

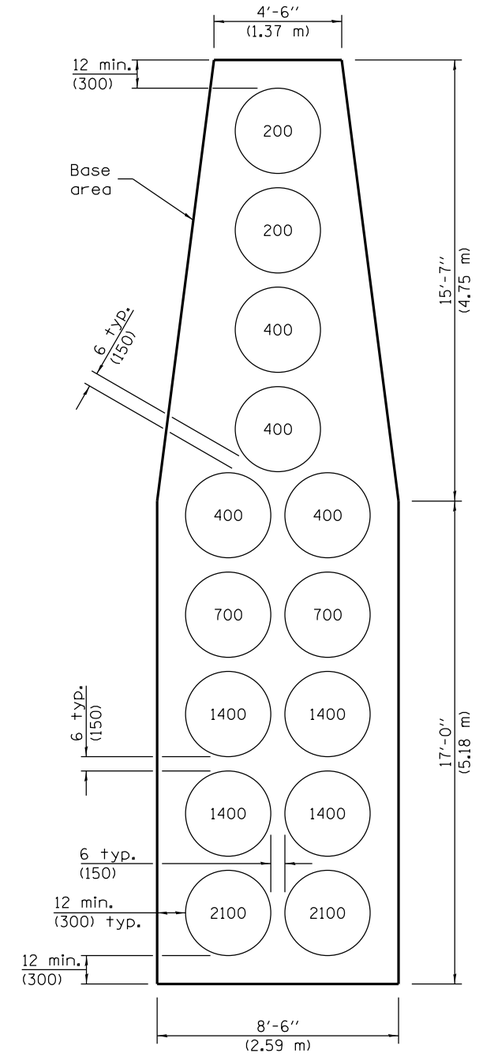


## TEST LEVEL 3 ARRAY

(For design speed greater than 45 mph.)
(Numbers inside sand modules indicate sand weight in pounds.)

## GENERAL NOTES

All dimensions are in inches (millimeters) unless otherwise shown.

Illinois Department of Transportation

PASSED January 1, 2014
Michael Brand
ENGINEER OF POLICY AND PROCEDURES
APPROVED January 1, 2014
ENGINEER OF DESIGN AND ENVIRONMENT

ISSUED 1-1-97

| DATE | REVISIONS |
|---|---|
| 1-1-14 | Revised distance from barrels to hazard. |
| 1-1-13 | Changed 'posted speed' to 'design speed'. |

# SAND MODULE IMPACT ATTENUATORS

STANDARD 643001–02

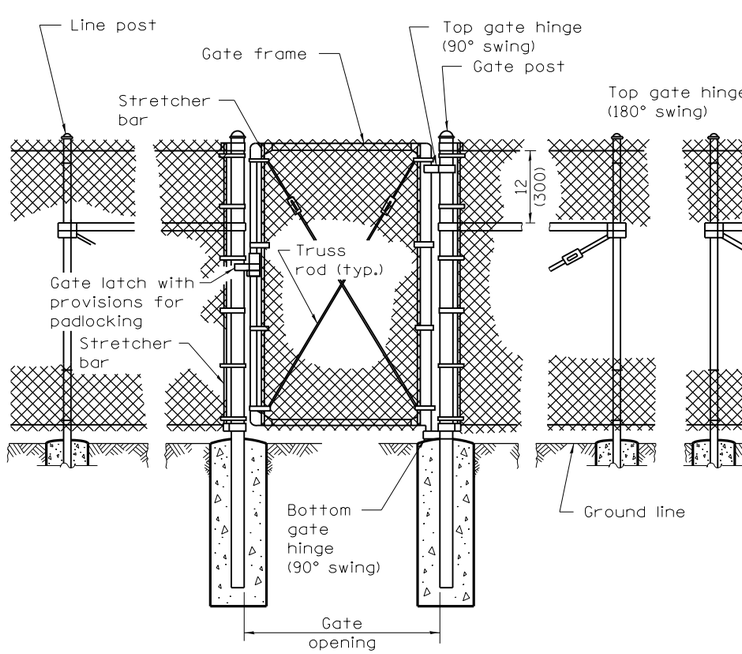


## PEDESTRIAN GATE ARRANGEMENT

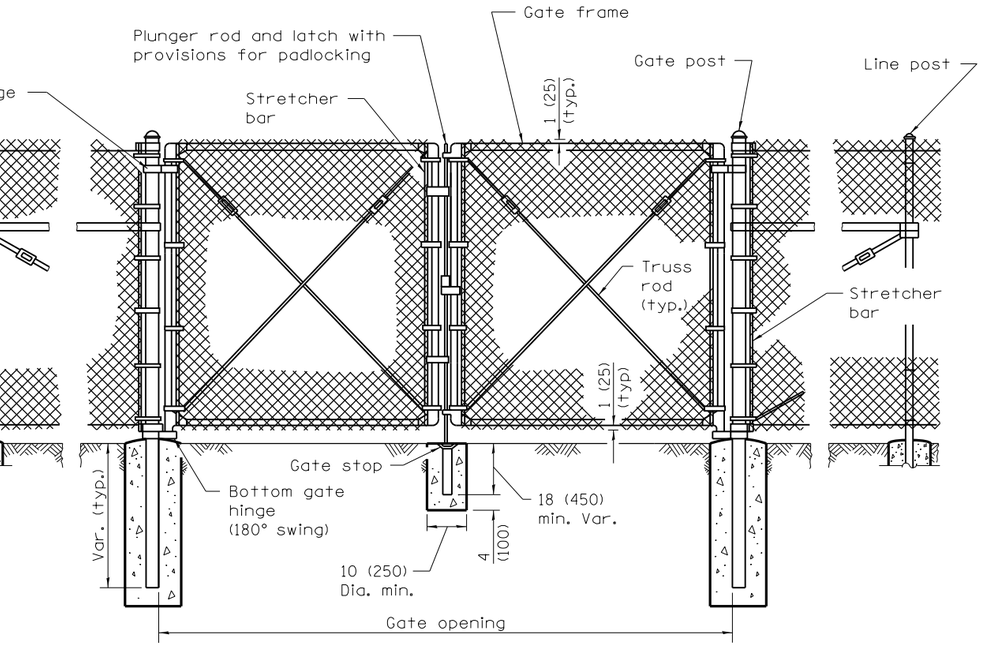


## VEHICLE GATE ARRANGEMENT

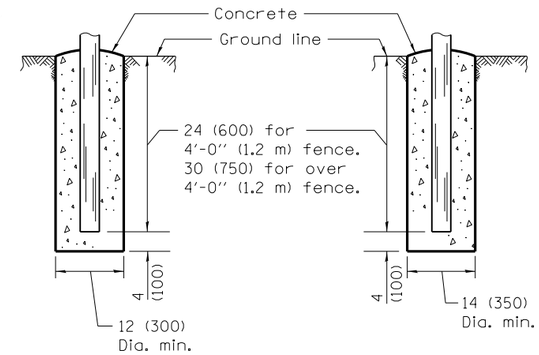


## FOOTING FOR LINE POST

## FOOTING FOR GATE & TERMINAL POST

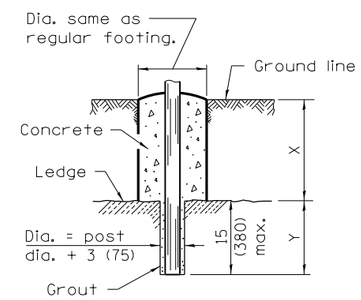


## FOOTING FOR POST IN ROCK LEDGE

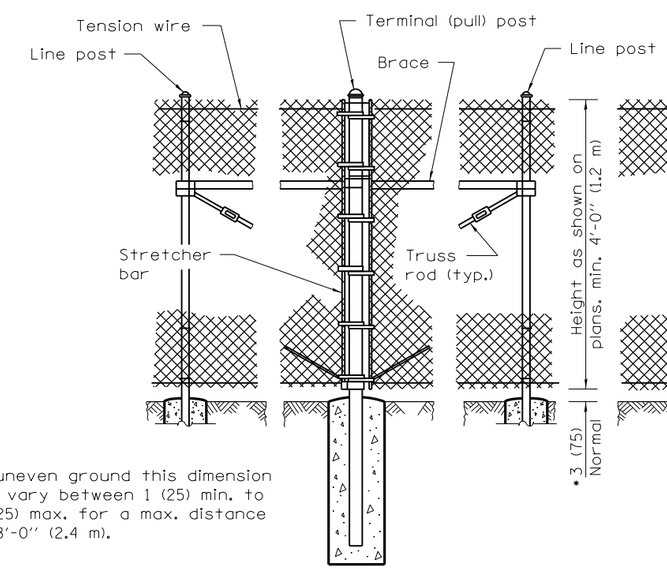


## PULL POST ARRANGEMENT

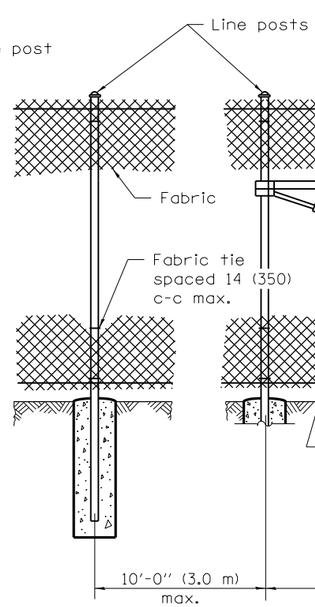


## LINE POST ARRANGEMENT

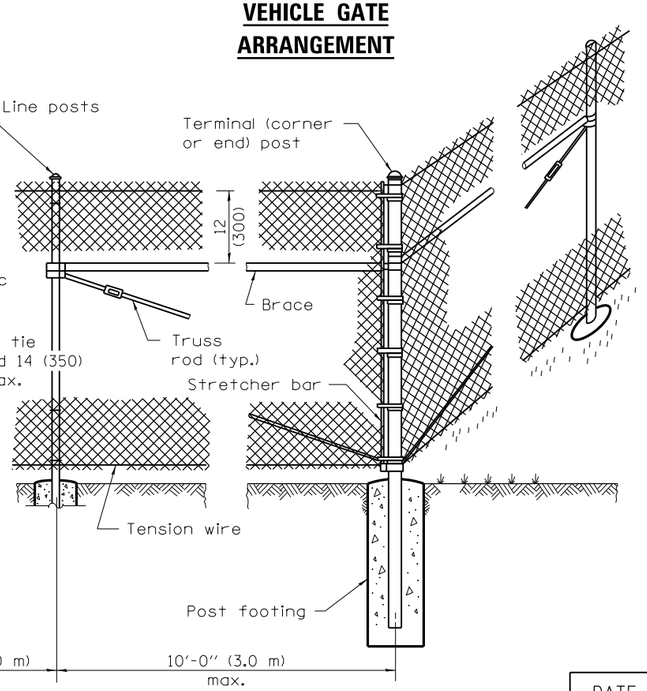


## CORNER OR END POST ARRANGEMENT

* On uneven ground this dimension may vary between 1 (25) min. to 5 (125) max. for a max. distance of 8'-0" (2.4 m).

## GENERAL NOTES

Pull posts shall be placed at locations determined by the Engineer. They shall be placed at 660' (200 m) intervals between posts to which the ends of the fabric are clamped or midway between such posts when the distance is less than 1320' (400 m) and greater than 660' (200 m).

X + Y shall not exceed 24 (600), 30 (750), or 36 (900), as applicable. When X is 0 - 9 (0 - 225), 15 (380), or 21 (525), then Y = 15 (375) and the post shall be shortened as required. When X exceeds 9 (225), 15 (380), or 21 (525), then Y shall be decreased correspondingly.

All dimensions are in inches (millimeters) unless otherwise shown.

Illinois Department of Transportation

PASSED January 1, 2009
ENGINEER OF POLICY AND PROCEDURES
APPROVED January 1, 2009
ENGINEER OF DESIGN AND ENVIRONMENT

ISSUED 1-1-97

| DATE | REVISIONS |
|---|---|
| 1-1-09 | Switched units to English (metric). |
| 1-1-99 | Rev. "pans" to "plans" in LINE POST ARRANGEMENT. |

# CHAIN LINK FENCE

(Sheet 1 of 3)

STANDARD 664001–02

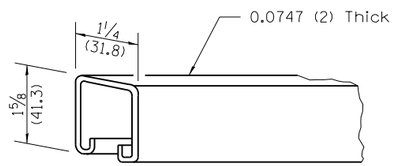


**ROLL FORMED SECTION OF BRACE**

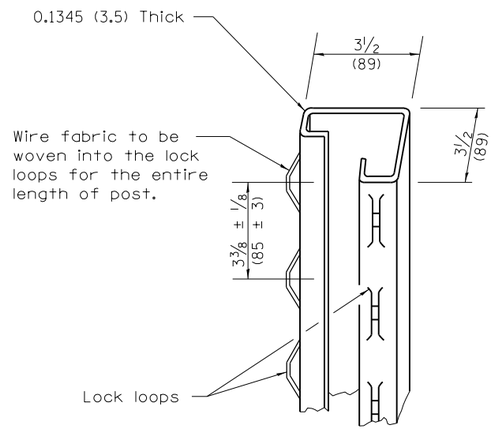


**ROLL FORMED SECTION OF TERMINAL & GATE POST**

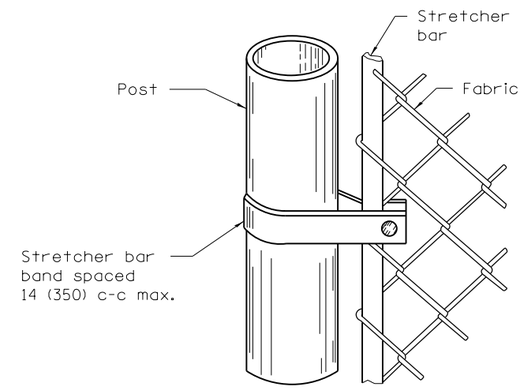


**METHOD OF FASTENING STRETCHER BAR TO POST**

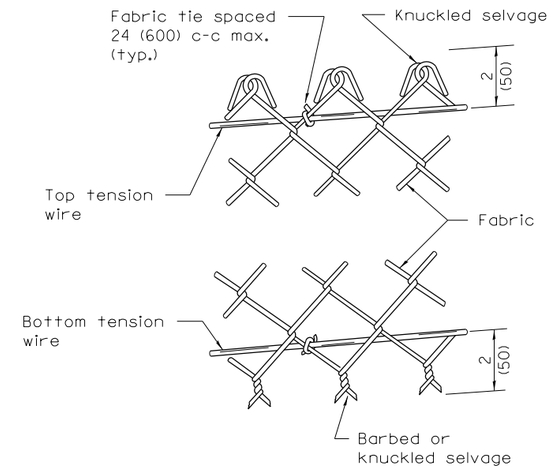


**METHOD OF TYING FABRIC TO TENSION WIRES**

| LINE POST | |
|---|---|
| Section | lbs./ft. (kg/m) |
| Pipe Type A 1.90 (48.3) O.D. | 2.72 (4.05) |
| Pipe Type B 1.90 (48.3) O.D. | 2.28 (3.39) |
| Pipe Type C 1.90 (48.3) O.D. | 2.26 (3.36) |
| H 1.875x1.625 (47.6x41.3) | 2.72 (4.05) |
| ⊏ | 1.60 (2.38) |
| I | 2.30 (3.42) |

| TERMINAL POST | |
|---|---|
| Section | lbs./ft. (kg/m) |
| Pipe Type A 2.375 (60.3) O.D. | 3.65 (5.43) |
| Pipe Type B 2.375 (60.3) O.D. | 3.11 (4.63) |
| Pipe Type C 2.375 (60.3) O.D. | 3.09 (4.60) |
| Roll Formed 3 1/2x3 1/2 (89.0x89.0) | See detail |
| Sq. Tubing 2 1/2x2 1/2 (63.5x63.5) | 4.32 (6.43) |

| HORIZONTAL BRACES | |
|---|---|
| Section | lbs./ft. (kg/m) |
| Pipe Type A 1.66 (42.2) O.D. | 2.27 (3.38) |
| Pipe Type B 1.66 (42.2) O.D. | 1.83 (2.72) |
| Pipe Type C 1.66 (42.2) O.D. | 1.82 (2.71) |
| H 1.31x1.5 (33.3x38.1) | 2.25 (3.35) |
| Roll Formed 1 5/8x1 1/4 (41.3x31.8) | See detail |

| GATE FRAMES | |
|---|---|
| Section | lbs./ft. (kg/m) |
| Pipe Type A 1.66 (42.2) O.D. | 2.27 (3.38) |
| Pipe Type B 1.66 (42.2) O.D. | 1.83 (2.72) |
| Pipe Type C 1.66 (42.2) O.D. | 1.82 (2.71) |

| GATE POSTS * | | | | | | | |
|---|---|---|---|---|---|---|---|
| Gate Opening * ft. (m) | | Pipe Type A | | Sq. Tubing | | Pipe Type B | |
| Single | Double | Size (O.D.) | lbs./ft. (kg/m) | Size | lbs./ft. (kg/m) | Size (O.D.) | kg/m (lbs./ft.) |
| Up to 4 (1.2) | Up to 8 (2.5) | 2.375 (60.3) | 3.65 (5.43) | 2 1/2 (63.5) | 4.32 (6.43) | 2.375 (60.3) | 3.11 (4.63) |
| Over 4 (1.2) to 8 (2.5) | Over 8 (2.5) to 16 (5.0) | 2.875 (73.0) | 5.79 (8.62) | 3 (76.2) | 5.78 (8.60) | 2.875 (73.0) | 4.64 (6.91) |
| Over 8 (2.5) to 12 (3.6) | Over 16 (5.0) to 24 (7.4) | 3.5 (89.0) | 7.58 (11.28) | 3 (76.2) | 8.80 (13.10) | 3.5 (89) | 5.707 (8.49) |

* The 3 1/2 x 3 1/2 (89.0 x 89.0) roll formed section as detailed may be used as gate posts for single gate up to 6' (1.8 m) and double gate up to 12' (3.6 m).

Illinois Department of Transportation

PASSED January 1, 2009
ENGINEER OF POLICY AND PROCEDURES
APPROVED January 1, 2009
ENGINEER OF DESIGN AND ENVIRONMENT

ISSUED 1-1-97

# CHAIN LINK FENCE

(Sheet 2 of 3)

**STANDARD 664001–02**

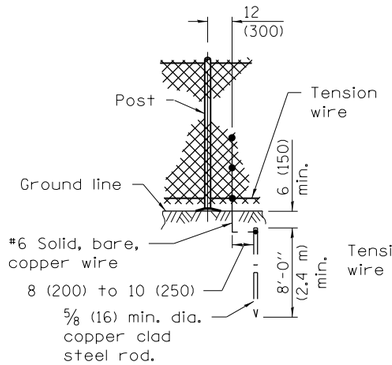


**STANDARD GROUND**

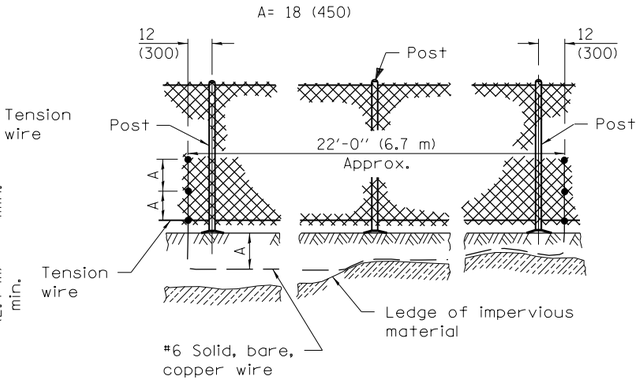


**COUNTERPOISE GROUND**
**(ALTERNATE)**

**PROTECTIVE ELECTRICAL GROUNDS**

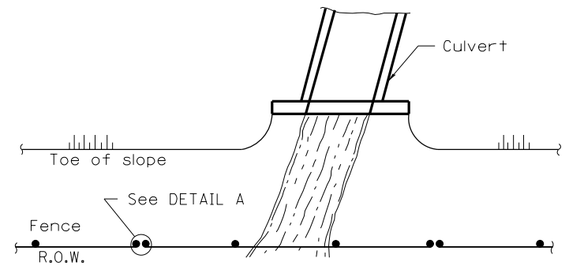


**PLAN**
**AT STREAM CROSSING**

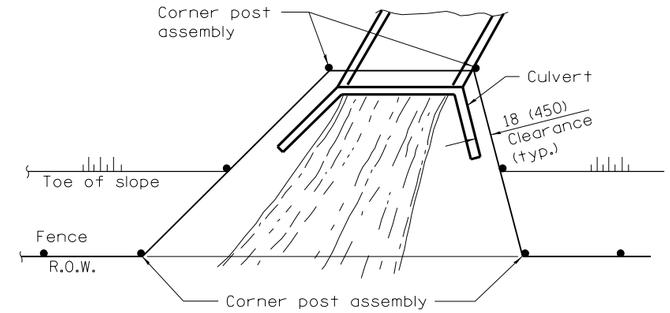


**PLAN**
**AT HEADWALL**

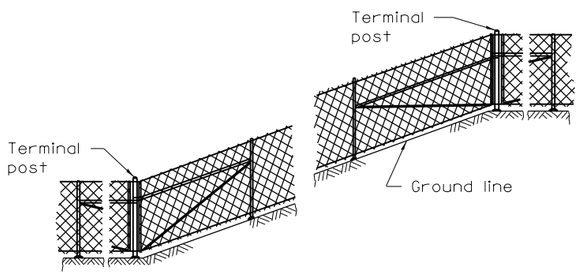


**INSTALLATION ON SLOPES**

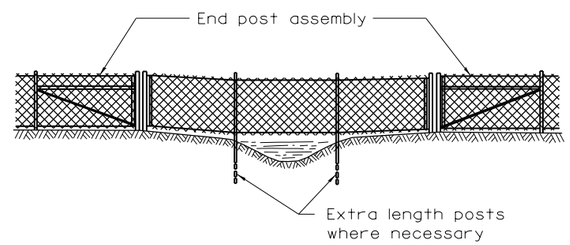


The chain link fabric shall be replaced by barbed wire strands at 12 (300) maximum centers between the double posts shown on DETAIL A when shown on the plans.

**ELEVATION**
**INSTALLATION OVER STREAM**

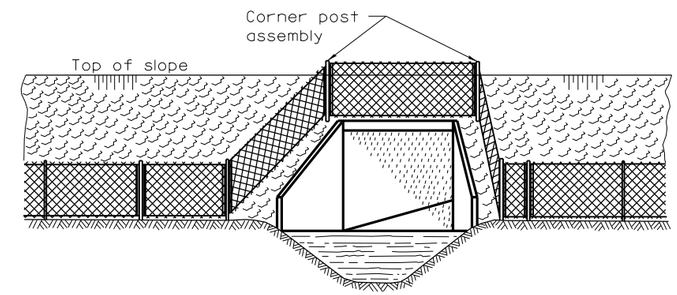


When the width of the culvert makes it necessary to anchor a post to the top of the culvert, a cast iron shoe or other device approved by the Engineer shall be used.

**ELEVATION**
**INSTALLATION AROUND HEADWALL**

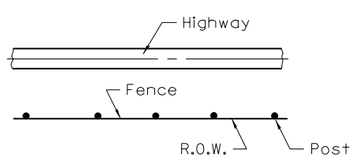


**PLAN**

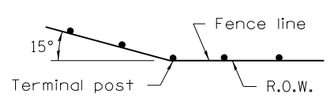


When fence line has a change in direction of 15° or more, a terminal post shall be placed as shown above.

Where angle is less than 15° and existing conditions require a terminal post, they shall be placed as directed by the Engineer.

**INSTALLATION AT CORNERS**

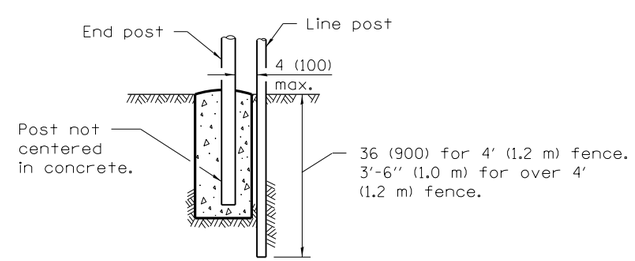


**DETAIL A**

Illinois Department of Transportation

PASSED January 1, 2009
ENGINEER OF POLICY AND PROCEDURES
APPROVED January 1, 2009
ENGINEER OF DESIGN AND ENVIRONMENT

ISSUED 1-1-97

# CHAIN LINK FENCE

(Sheet 3 of 3)

**STANDARD 664001-02**

# FENCE USING METAL POSTS

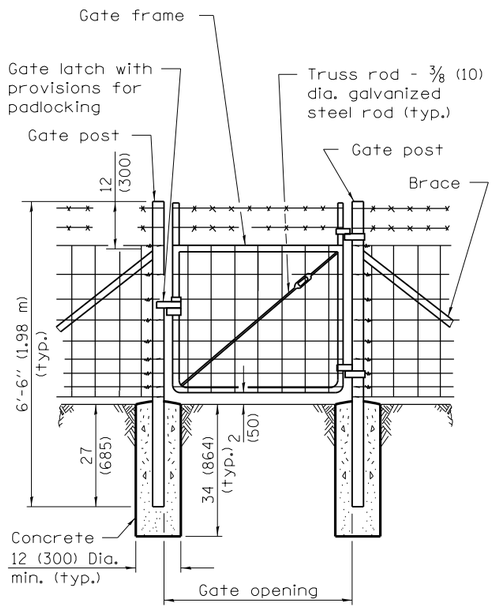


## SINGLE GATE

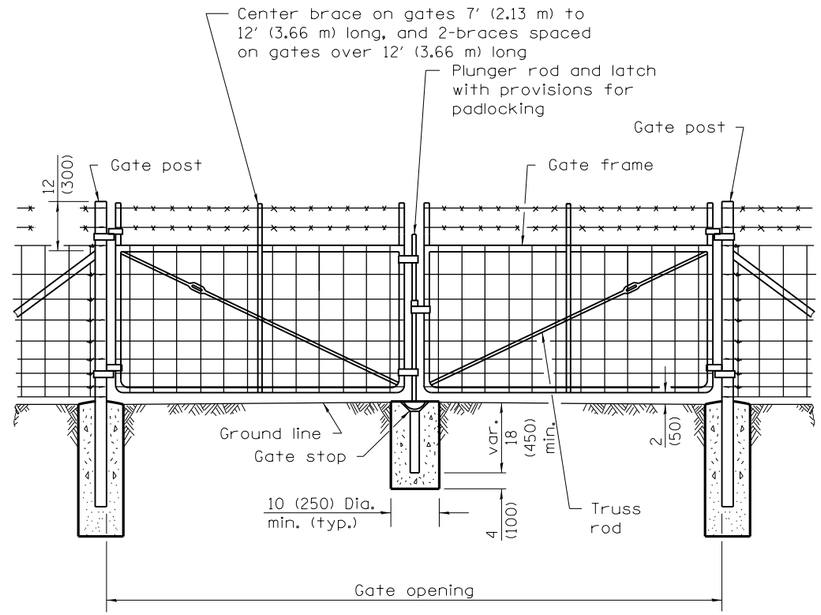


## DOUBLE GATE

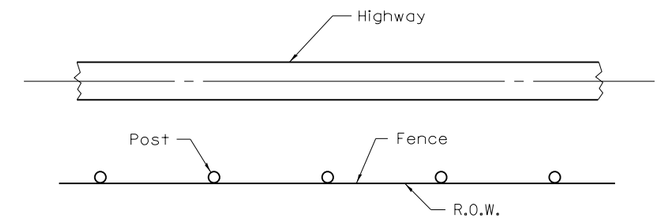


## PLAN

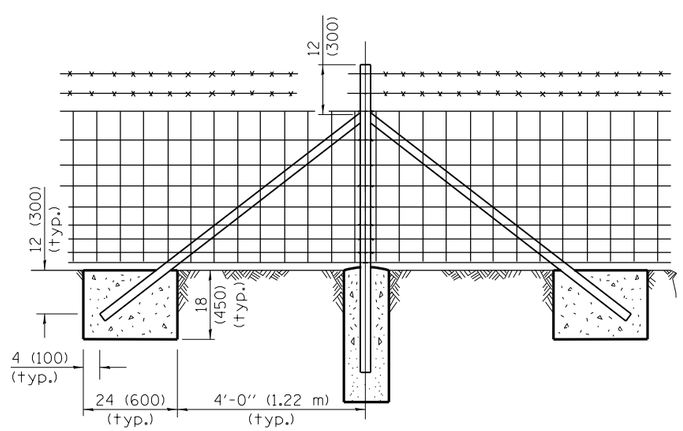


## PULL POST

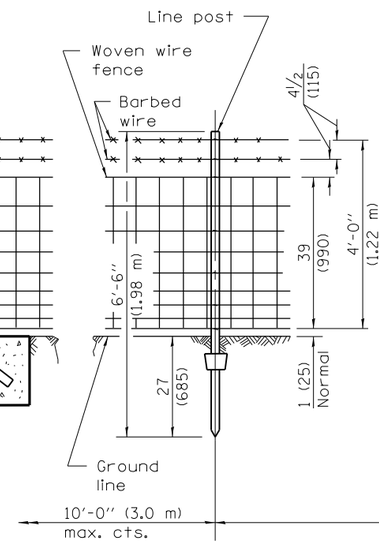


## LINE POST

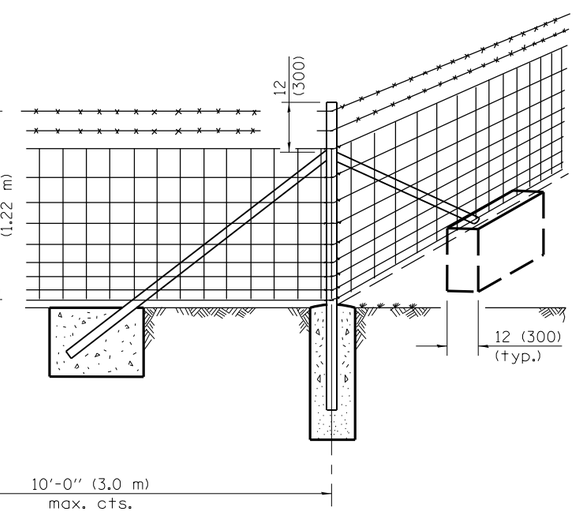


## CORNER OR END POST

## NOTES

Barbed wires shall be tied to each post. Top and bottom wires of woven fence shall be tied to each post. Tie every other wire between, alternating on successive posts.

Barbed wires and line wires of woven fence shall be be fastened to the corner, end, pull, and gate posts by wrapping the wires around the post and tying back on itself with not less than 3 twists tightly wrapped.

## GENERAL NOTES

Pull posts shall be placed at the locations determined by the Engineer. They shall be placed at 660' (200 m) intervals between posts to which the ends of the fabric and barbed wires are fastened or midway between such posts when the distance is less than 1320' (400 m) and greater than 660' (200 m).

Bracing for gate posts shall be the same type used for end posts.

The clearance between the bottom fence wire and the ground may be up to 3 (75) for a maximum distance of 8' (2.4 m) when uneven ground is encountered.

All dimensions are in inches (millimeters) unless otherwise shown.

Illinois Department of Transportation

PASSED January 1, 2009
ENGINEER OF POLICY AND PROCEDURES
APPROVED January 1, 2009
ENGINEER OF DESIGN AND ENVIRONMENT

ISSUED 1-1-97

| DATE | REVISIONS |
|---|---|
| 1-1-09 | Switched units to |
| | English (metric). |
| | |
| 1-1-02 | Corrected dimensions on |
| | sheet 3 and 4. |
| | |

# WOVEN WIRE FENCE

(Sheet 1 of 4)

**STANDARD 665001–02**

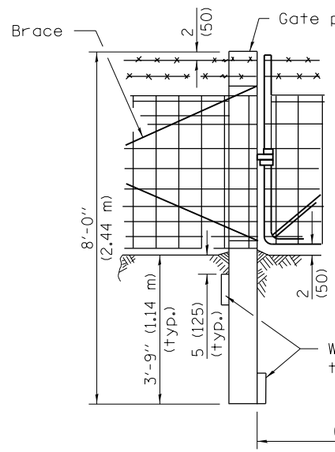


## SINGLE OR DOUBLE GATE

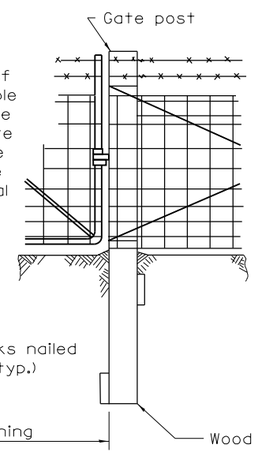


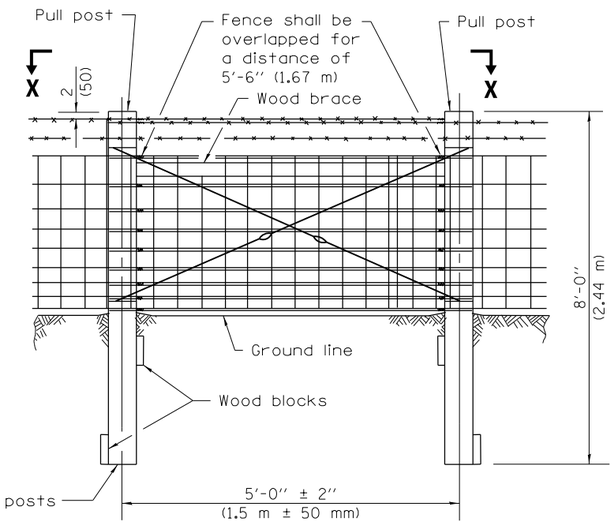


## PULL POST

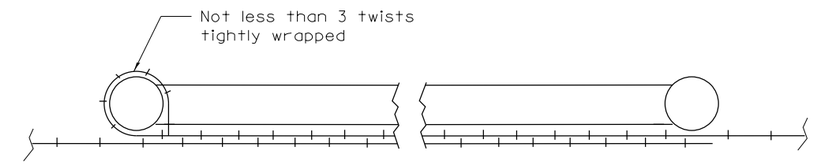


## SECTION X–X

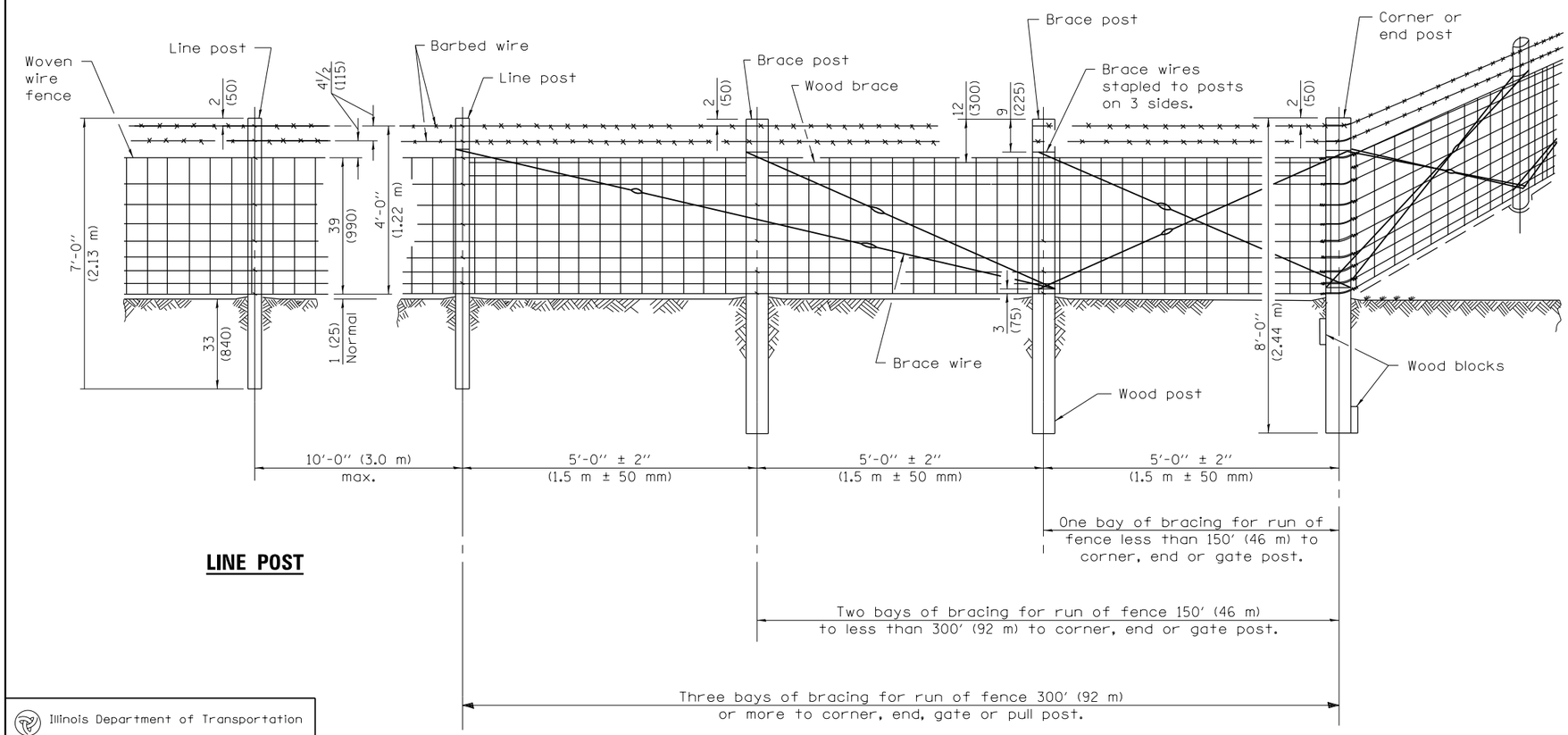


## LINE POST

## CORNER OR END POST

## NOTES

Barbed wires shall be stapled to each post. Top and bottom wire of woven fence shall be stapled to each post. Staple every other wire between, alternating on successive posts.

Metal line posts may be used in lieu of wood line posts.

Illinois Department of Transportation

PASSED January 1, 2009
ENGINEER OF POLICY AND PROCEDURES
APPROVED January 1, 2009
ENGINEER OF DESIGN AND ENVIRONMENT

ISSUED 1-1-97

# WOVEN WIRE FENCE

(Sheet 2 of 4)

STANDARD 665001–02

## METAL ITEMS

| GATE FRAMES | | CORNER, END or PULL POSTS | | LINE POSTS | | BRACES | |
|---|---|---|---|---|---|---|---|
| Section | lbs./ft. (kg/m) | Section | lbs./ft. kg/m | Section | lbs./ft. (kg/m) | Section | lbs./ft. (kg/m) |
| Type A: Pipe 1.66 (42.2) O.D. | 2.27 (3.38) | Type A: Pipe 2.375 (60.3) O.D. | 3.65 (5.43) | Type A: Pipe 1.315 (33.4) O.D. | 1.68 (2.50) | Type A: Pipe 1.66 (42.2) O.D. | 2.27 (3.38) |
| Type B: Pipe 1.66 (42.2) O.D. | 1.83 (2.72) | Type B: Pipe 2.375 (60.3) O.D. | 3.11 (4.63) | Type B: Pipe 1.315 (33.4) O.D. | 1.34 (1.99) | Type B: Pipe 1.66 (42.2) O.D. | 1.83 (2.72) |
| Type C: Pipe 1.66 (42.2) O.D. | 1.82 (2.71) | Type C: Pipe 2.375 (60.3) O.D. | 3.09 (4.60) | Type C: Pipe 1.315 (33.4) O.D. | 1.33 (1.98) | Type C: Pipe 1.66 (42.2) O.D. | 1.82 (2.71) |
| | | Tubing 2.5 (63.5) Sq. | 4.32 (6.43) | Tubing 1 (25.4) Sq. | 1.41 (2.10) | | |
| | | Angle $2\frac{1}{2}\times2\frac{1}{2}\times\frac{1}{4}$ (64x64x6.4) | 4.1 (6.10) | | | Angle $2\frac{1}{2}\times2\frac{1}{2}\times\frac{1}{4}$ (64x64x6.4) | 3.19 (4.75) |
| | | H, I, U, structural shapes | 4.1 (6.10) min. | L, C, T, U, Y or other approved structural shapes | 1.33 (1.98) min. | or other approved structural shapes | 3.1 (4.61) min. |

## METAL ITEMS

| GATE POSTS | | | | | |
|---|---|---|---|---|---|
| Single gate up to 4 ft. (1.22 m)<br>Double gate up to 8 ft. (2.44 m) | | over 4 ft. to 8 ft. (1.22 m to 2.44 m)<br>over 8 ft. to 16 ft. (2.44 m to 4.88 m) | | over 8 ft. to 12 ft. (2.44 m to 3.66 m)<br>over 16 ft. to 24 ft. (4.88 m to 7.32 m) | |
| Section | lbs./ft. (kg/m) | Section | lbs./ft. (kg/m) | Section | lbs./ft. (kg/m) |
| Type A: Pipe 2.375 (60.3) O.D. | 3.65 (5.43) | 2.875 (73.0) O.D. | 5.79 (8.62) | 3.500 (88.9) O.D. | 7.58 (11.28) |
| Type B: Pipe 2.375 (60.3) O.D. | 3.11 (4.63) | 2.875 (73.0) O.D. | 4.64 (6.91) | | |
| Type C: Pipe 2.375 (60.3) O.D. | 3.09 (4.60) | 2.875 (73.0) O.D. | 3.78 (5.63) | | |
| Tubing 2.5 (63.5) Sq. | 4.32 (6.43) | 3 (76.2) Sq. | 5.78 (8.60) | 3 (76.2) Sq. | 8.80 (31.10) |
| Angle $2\frac{1}{2}\times2\frac{1}{2}\times\frac{1}{4}$ (64x64x6.4) | 4.1 (6.10) | $3\times3\times\frac{5}{16}$ (76x76x7.9) | 6.1 (9.08) | $3\frac{1}{2}\times3\frac{1}{2}\times\frac{3}{8}$ (76x76x9.5) | 8.5 (10.70) |
| H, I, U, structural shapes | 4.1 (6.10) min. | | 6.1 (9.08) min. | | 8.5 (10.70) min. |

## WOOD ITEMS

(S4S or Rough Sawn)

| GATE, CORNER, END or PULL POSTS | BRACES and LINE POSTS | BLOCKS |
|---|---|---|
| 6 to 7 (150 to 175) Top dia.<br>6x6 (150x150) | 4 to 5 (100 to 125) Top dia.<br>4x4 (100x100) | 2x8x18 (50x200x450) |

Illinois Department of Transportation

PASSED January 1, 2009

ENGINEER OF POLICY AND PROCEDURES

APPROVED January 1, 2009

ENGINEER OF DESIGN AND ENVIRONMENT

ISSUED 1-1-97

# WOVEN WIRE FENCE

(Sheet 3 of 4)

**STANDARD 665001–02**

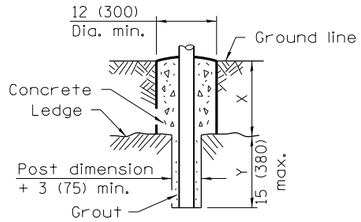


**METAL POST**

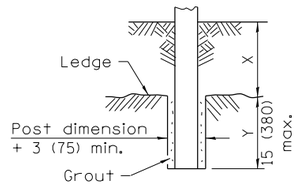


**WOOD POST**

NOTE
X + Y shall not exceed 27 (685), 33 (840), or 3′-9″ (1.14 m) as applicable. When X is 0 to 12 (300), 18 (450), or 30 (760), Y = 15 (380), and the post shall be shortened as required. When X exceeds 12 (300), 18 (450), or 30 (760), Y shall be decreased correspondingly.

## FOOTING FOR POSTS WHEN ROCK LEDGE IS ENCOUNTERED

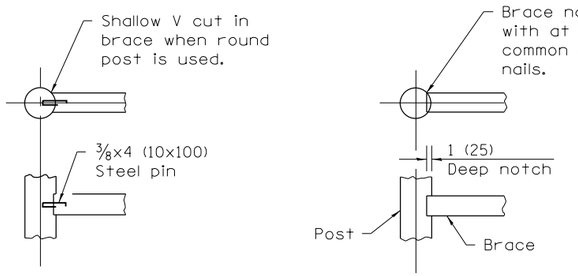


## ALTERNATE DETAILS FOR FASTENING WOOD BRACE TO WOOD POST

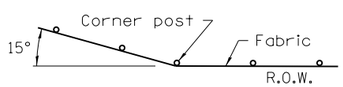


NOTE
Where fence line has a change in direction of 15° of more, a corner post with bracing as required shall be placed as shown above. Where angle is less than 15° and existing conditions require a corner post, they shall be placed as directed by the Engineer.

## INSTALLATION AT CORNERS

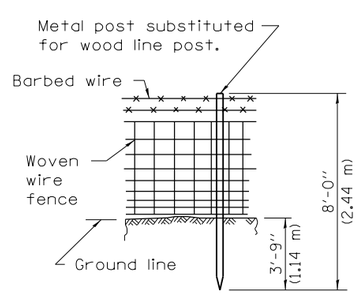


## PROTECTIVE ELECTRICAL GROUNDING FOR WOOD POST FENCE INSTALLATION

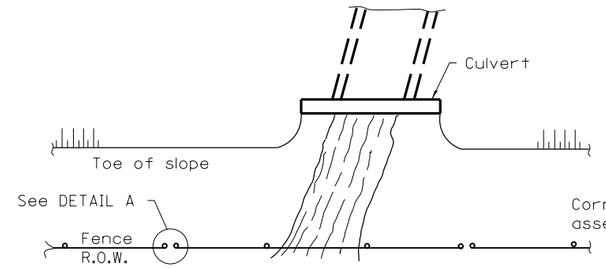


## PLAN AT STREAM CROSSING

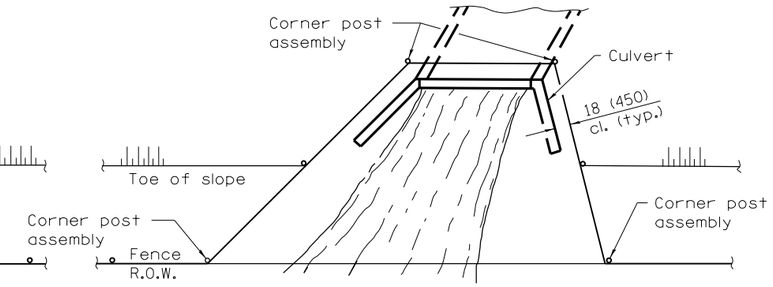


## PLAN AT HEADWALL

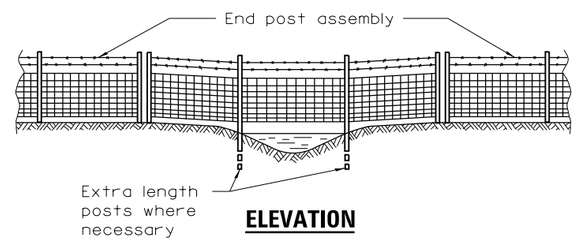


## ELEVATION

NOTE
The woven wire fabric shall be replaced by barbed wire strands at 12 (300) maximum centers between the double posts shown on DETAIL A when shown on the plans.

## INSTALLATION OVER STREAM

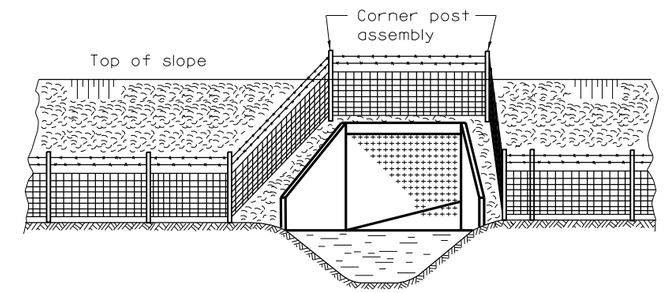


## ELEVATION

NOTE
When the width of the culvert makes it necessary to anchor a post to the top of the culvert, a cast iron shoe or other device approved by the Engineer shall be used.

## INSTALLATION AROUND HEADWALL

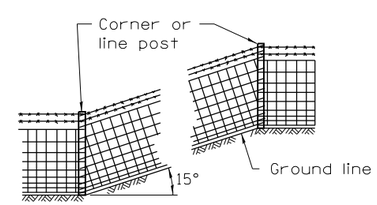


NOTE
Where grade line has a change in slope of 15° or more, a corner post with bracing as required shall be placed as shown above. Where angle is less than 15° line posts may be used.

When the tension of the fence tends to pull the posts from the ground, the line posts shall be anchored with the applicable concrete or wood anchorage specified for corner posts.

## INSTALLATION ON SLOPES

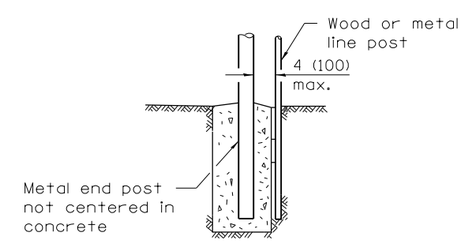


## DETAIL A

Illinois Department of Transportation

PASSED January 1, 2009
ENGINEER OF POLICY AND PROCEDURES
APPROVED January 1, 2009
ENGINEER OF DESIGN AND ENVIRONMENT

ISSUED 1-1-97

# WOVEN WIRE FENCE

(Sheet 4 of 4)

**STANDARD 665001–02**

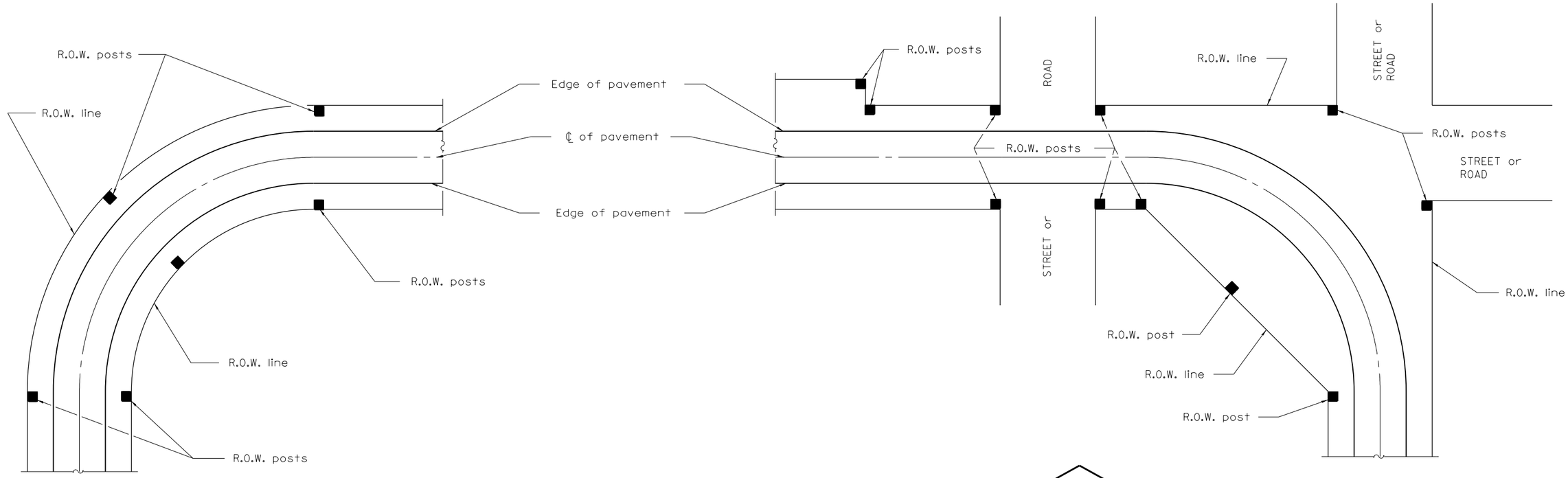


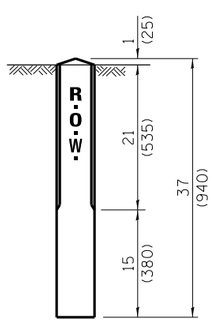


**METHOD B**

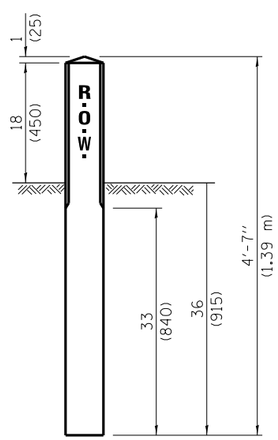


**METHOD A**

* 2 (50) When shadow box is used.

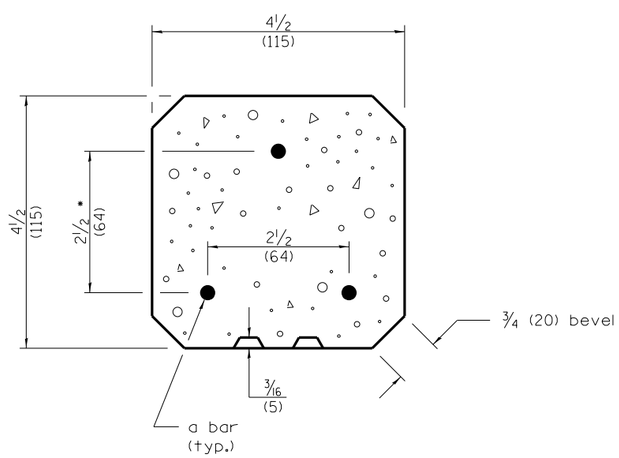


**SECTION A–A**

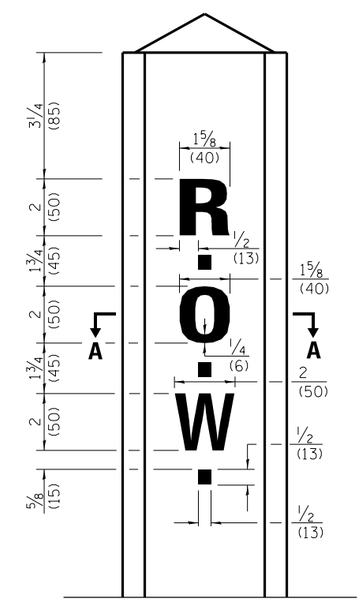


**GENERAL NOTE**

Reinforcement bars shall be No. 3 (No. 10) unless otherwise specified.

A 2¾x12⅛ (70x310) shadow box with beveled edges, and a 3/16 (5) thick indentation may be used with the standard lettering shown.

All dimensions are in inches (millimeters) unless otherwise shown.

| | |
|---|---|
| METHOD A | 4'-0" (1.2 m) |
| METHOD B | 30 (750) |

**a BAR**

Illinois Department of Transportation

PASSED January 1, 2009
ENGINEER OF POLICY AND PROCEDURES
APPROVED January 1, 2009
ENGINEER OF DESIGN AND ENVIRONMENT

ISSUED 1-1-97

| DATE | REVISIONS |
|---|---|
| 1-1-09 | Switched units to |
| | English (metric). |
| | |
| 1-1-97 | Renum. Standard 1744-6. |
| | |
| | |

# RIGHT OF WAY MARKERS

**STANDARD 666001–01**

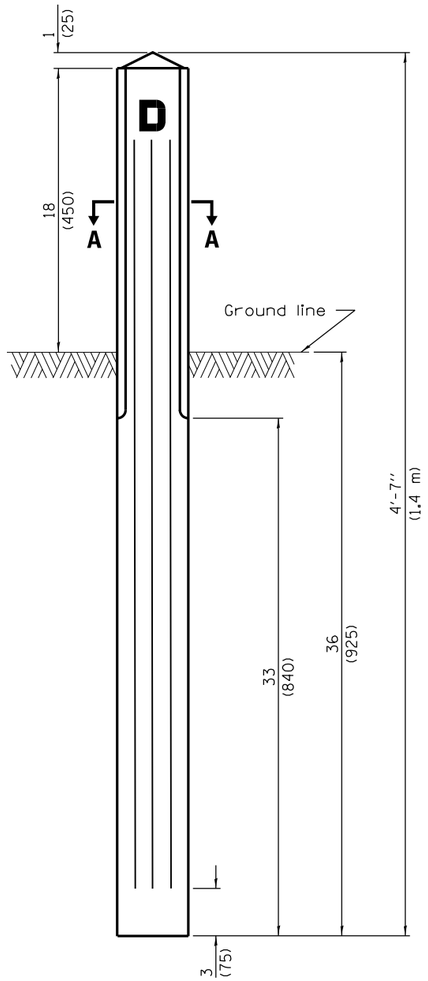


**FRONT ELEVATION**

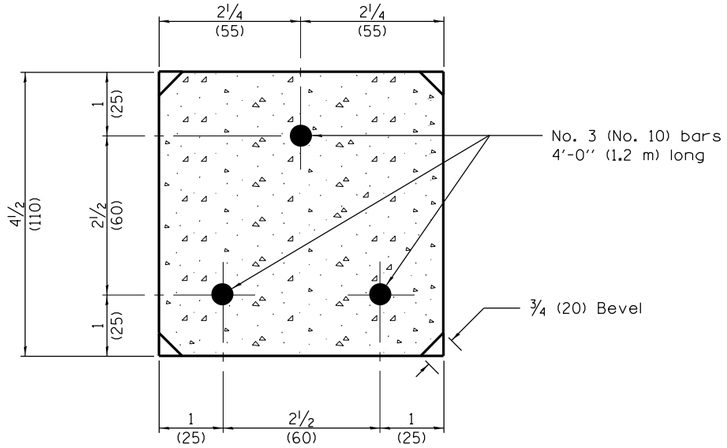


**SECTION A–A**

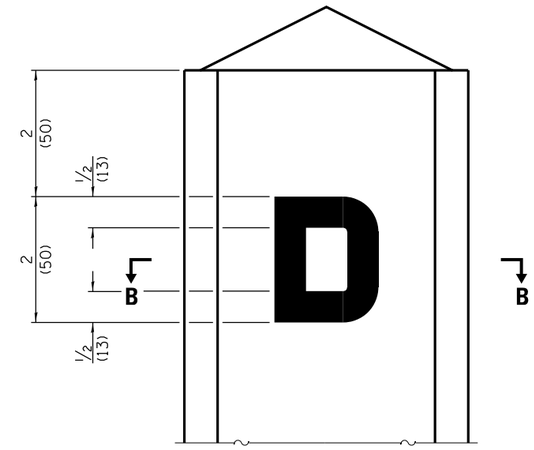


**DETAIL OF LETTER**

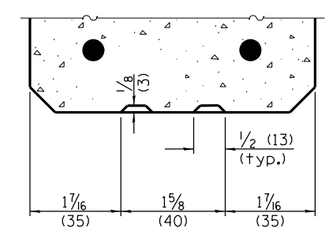


**SECTION B–B**

All dimensions are in inches (millimeters) unless otherwise shown.

Illinois Department of Transportation

PASSED January 1, 2009
ENGINEER OF POLICY AND PROCEDURES
APPROVED January 1, 2009
ENGINEER OF DESIGN AND ENVIRONMENT

ISSUED 1-1-97

| DATE | REVISIONS |
|---|---|
| 1-1-09 | Switched units to English (metric). |
| 1-1-97 | Renum. Standard 1999-4. |

# DRAINAGE MARKERS

**STANDARD 667001–01**

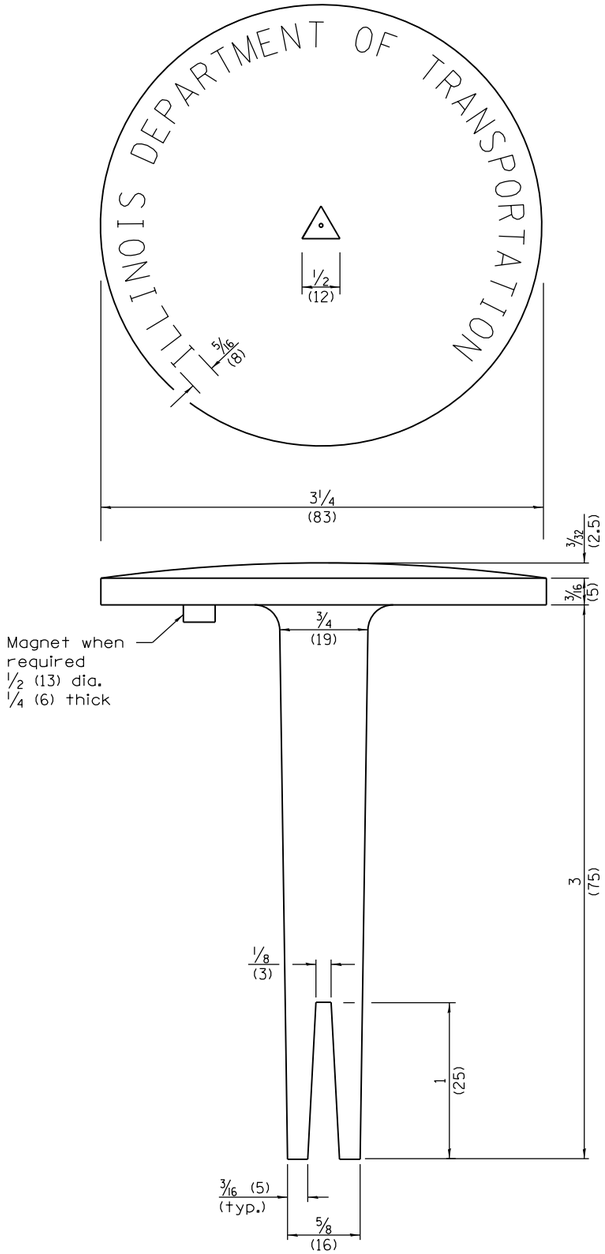


**ALUMINUM TABLET**

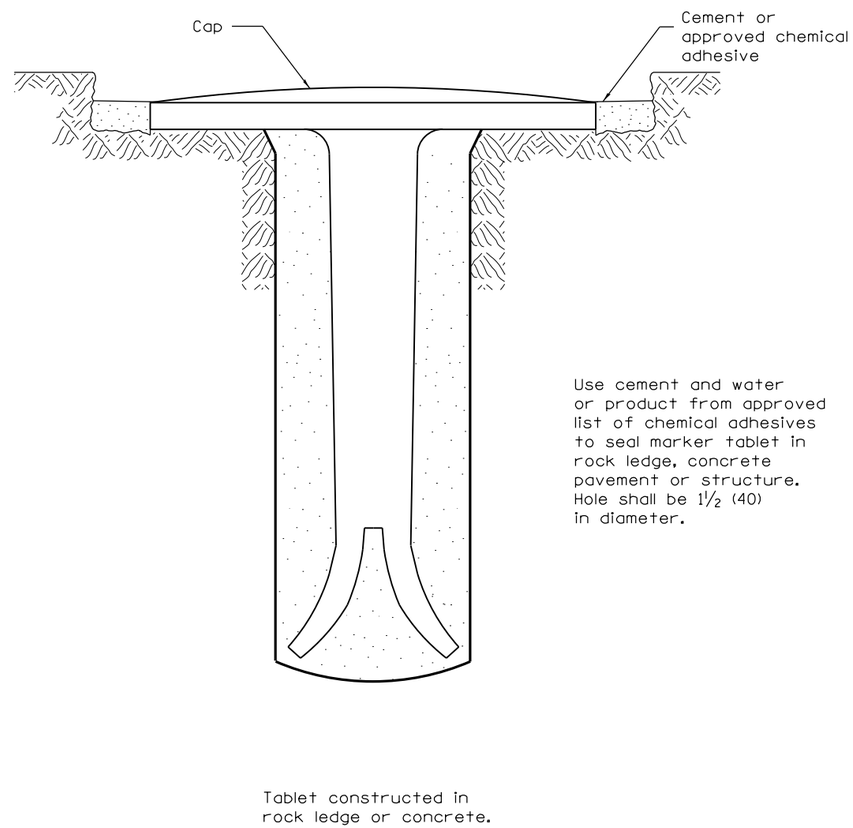


**TYPE I**

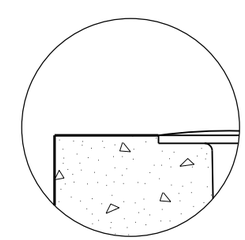

**DETAIL A**

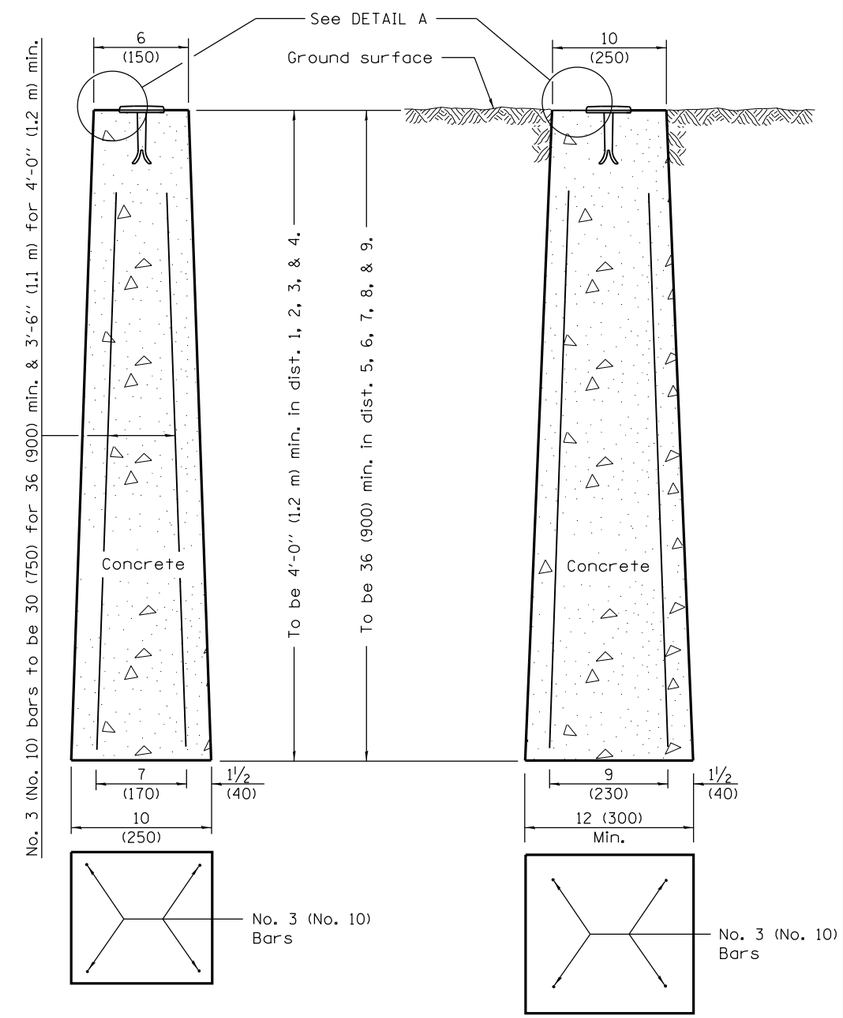


**PRECAST MARKER**

**CAST-IN-PLACE MARKER**

**TYPE II**

All dimensions are in inches (millimeters) unless otherwise shown.

| DATE | REVISIONS |
|---|---|
| 1-1-12 | Changed 'epoxy' references to 'chemical adhesives'. |
| 1-1-09 | Switched units to English (metric). |

# PERMANENT SURVEY MARKERS

**STANDARD 667101-02**

Illinois Department of Transportation

PASSED January 1, 2012
Michael Brand
ENGINEER OF POLICY AND PROCEDURES

APPROVED January 1, 2012
Scott E. Stokes
ENGINEER OF DESIGN AND ENVIRONMENT

ISSUED 1-1-97

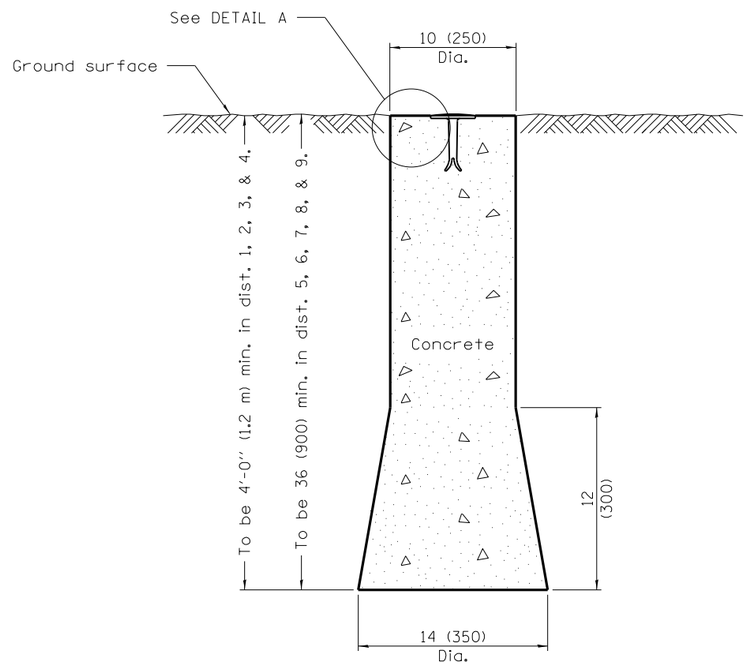


**ELEVATION**

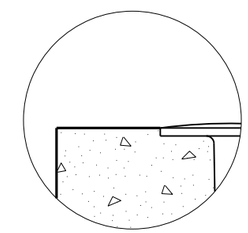

**DETAIL A**

All dimensions are in inches (millimeters) unless otherwise shown.

| DATE | REVISIONS |
|---|---|
| 1-1-09 | Switched units to |
| | English (metric). |
| | |
| 1-1-97 | Renum. Standard 2448. |
| | Revised depth. |
| | |

# U.S. GEOLOGICAL SURVEY AND NATIONAL GEODETIC SURVEY BENCHMARKS RESETTING METHOD

**STANDARD 668001–01**

Illinois Department of Transportation

PASSED January 1, 2009
ENGINEER OF POLICY AND PROCEDURES

APPROVED January 1, 2009
ENGINEER OF DESIGN AND ENVIRONMENT

ISSUED 1-1-97

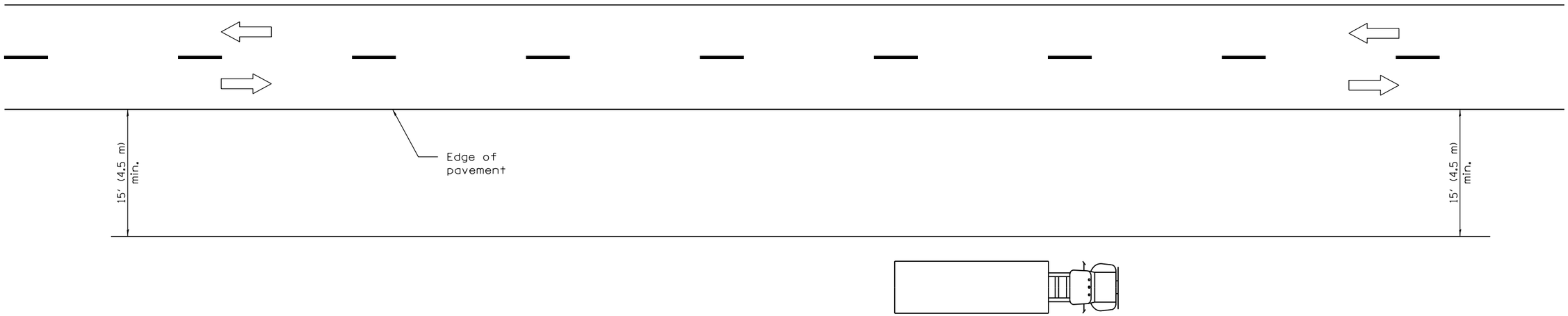


## TYPICAL APPLICATIONS

Landscaping work

Utility work

Fencing contracts and maintenance

Cleaning culverts

## GENERAL NOTES

This Standard is used where at all times all vehicles, equipment, workers or their activities are more than 15′ (4.5 m) from the edge of pavement.

When the work operation requires that two or more work vehicles cross the 15′ (4.5 m) clear zone in any one hour, traffic control shall be according to Standard 701006.

All dimensions are in inches (millimeters) unless otherwise shown.

Illinois Department of Transportation

APPROVED January 1, 2009
ENGINEER OF OPERATIONS

APPROVED January 1, 2009
ENGINEER OF DESIGN AND ENVIRONMENT

ISSUED 1-1-97

| DATE | REVISIONS |
|---|---|
| 1-1-09 | Switched units to |
| | English (metric). |
| | |
| 1-1-05 | Revised title and notes. |
| | |
| | |

# OFF–RD OPERATIONS, 2L, 2W, MORE THAN 15′ (4.5 m) AWAY

STANDARD 701001–02

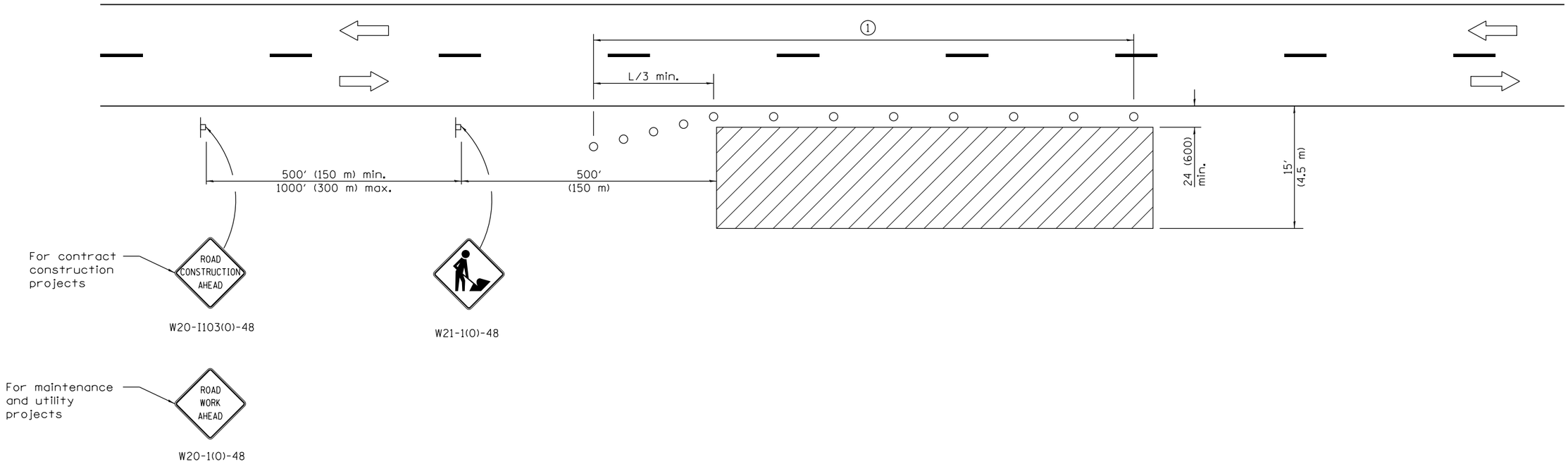


## TYPICAL APPLICATIONS

Utility operations
Culvert extensions
Side slope changes
Guardrail installation and maintenance
Delineator installation
Landscaping operations
Shoulder repair
Sign installation and maintenance

## SYMBOLS

Work area

Sign

Cone, drum or barricade

① When the work operation exceeds one hour, cones, drums or barricades shall be placed at 25′ (8 m) centers for L/3 distance, and at 50′ (15 m) centers through the remainder of the work area.

## GENERAL NOTES

This Standard is used where any vehicles, equipment, workers or their activities will encroach in the area 15′ (4.5 m) to 24 (600) from the edge of pavement.

Calculate L as follows:

| SPEED LIMIT | FORMULAS English | FORMULAS (Metric) |
|---|---|---|
| 40 mph (70 km/h) or less: | $L = \frac{WS^2}{60}$ | $L = \frac{WS^2}{150}$ |
| 45 mph (80 km/h) or greater: | L=(W)(S) | L=0.65(W)(S) |

W = Width of offset in feet (meters).

S = Normal posted speed mph (km/h).

All dimensions are in inches (millimeters) unless otherwise shown.

Illinois Department of Transportation

APPROVED January 1, 2014
ENGINEER OF SAFETY ENGINEERING

APPROVED January 1, 2014
ENGINEER OF DESIGN AND ENVIRONMENT

ISSUED 1-1-97

| DATE | REVISIONS |
|---|---|
| 1-1-14 | Revised workers sign |
| | number to agree with |
| | current MUTCD. |
| 1-1-13 | Omitted text 'WORKERS' |
| | sign. |
| | |

# OFF–RD OPERATIONS, 2L, 2W, 15′ (4.5 m) TO 24″ (600 mm) FROM PAVEMENT EDGE

STANDARD 701006–05

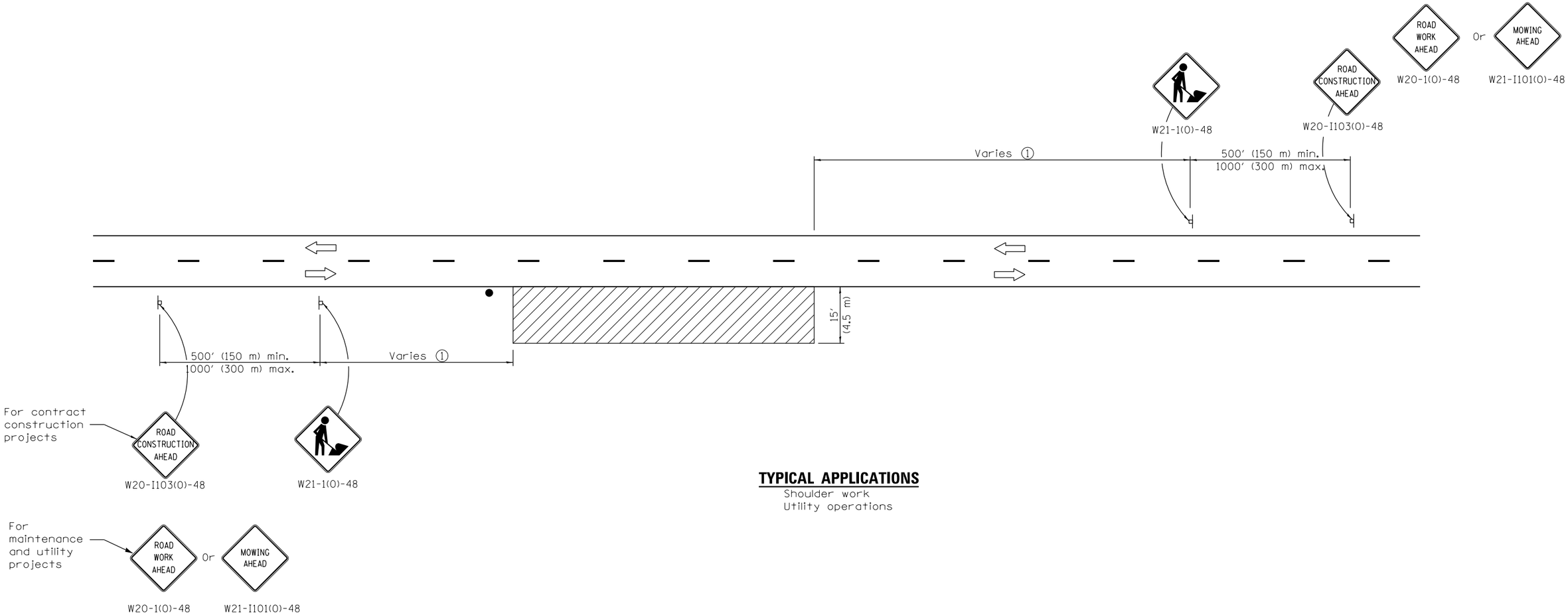


## TYPICAL APPLICATIONS

Shoulder work
Utility operations

① Minimum distance is 200′ (60 m). Maximum distance to be determined by the Engineer but should not exceed ½ the length required for one normal working day's operation, or 4 miles (6.4 km) whichever is less.

## SYMBOLS

Work area

Sign

Flagger with traffic control sign when required

## GENERAL NOTES

This Standard is used where at any time, any vehicle, equipment. workers or their activities require an intermittent or continuous moving operation on the shoulder, where the average speed is 1 mph (2 km/h) or less.

When the work operation does not exceed 60 minutes, traffic control may be according to Standard 701301.

All dimensions are in inches (millimeters) unless otherwise shown.

Illinois Department of Transportation

APPROVED January 1, 2014
ENGINEER OF SAFETY ENGINEERING

APPROVED January 1, 2014
ENGINEER OF DESIGN AND ENVIRONMENT

ISSUED 1-1-97

| DATE | REVISIONS |
|---|---|
| 1-1-14 | Revised workers sign |
| | number to agree with |
| | current MUTCD. |
| 1-1-13 | Omitted text 'WORKERS' |
| | sign. |
| | |

# OFF–RD MOVING OPERATIONS, 2L, 2W, DAY ONLY

STANDARD 701011–04

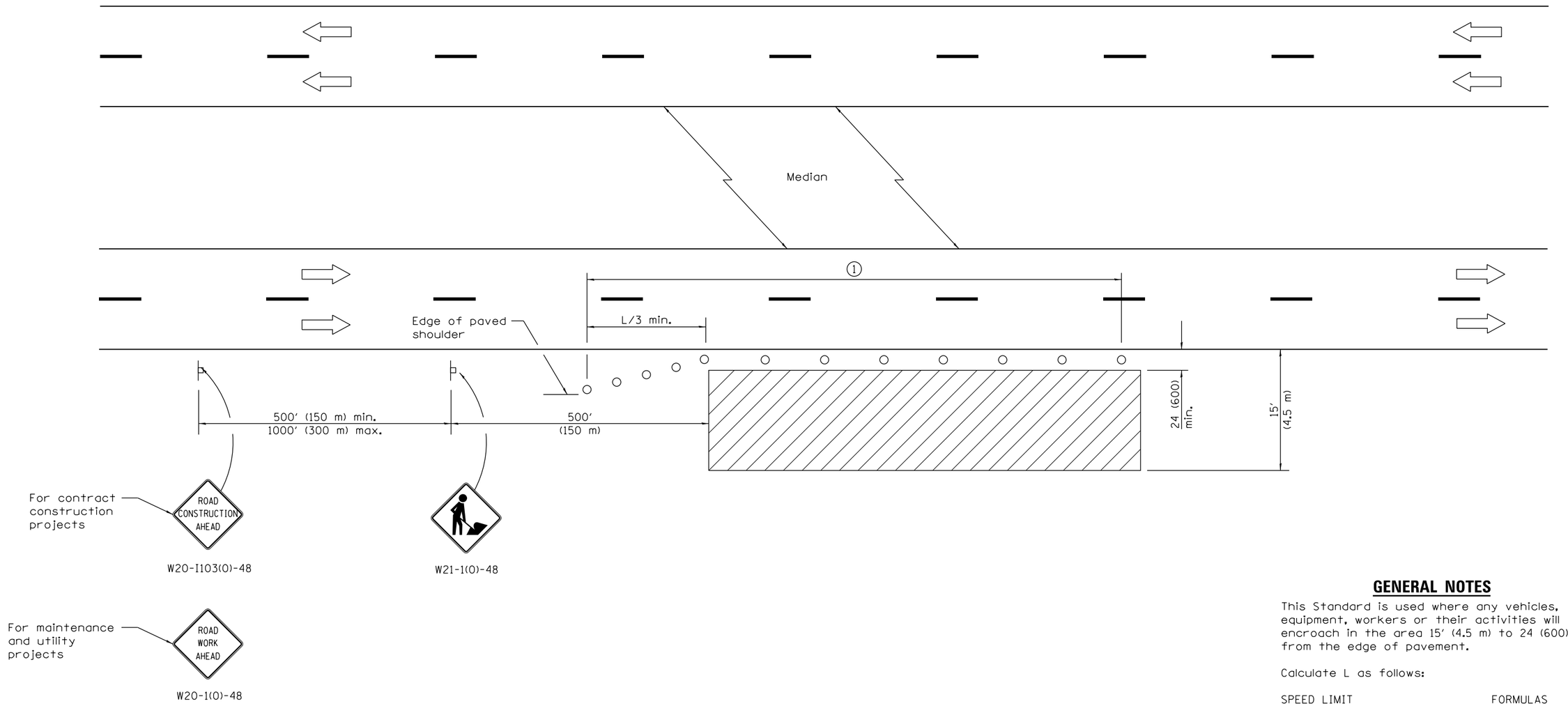


## TYPICAL APPLICATIONS

Utility operations
Culvert extensions
Side slope changes
Guardrail installation and maintenance
Delineator installation
Landscaping operations
Shoulder repair
Sign installation and maintenance

① When the work operation exceeds one hour, cones, drums or barricades shall be placed at 25′ (8 m) centers for L/3 distance, and at 50′ (15 m) centers through the remainder of the work area.

## GENERAL NOTES

This Standard is used where any vehicles, equipment, workers or their activities will encroach in the area 15′ (4.5 m) to 24 (600) from the edge of pavement.

Calculate L as follows:

| SPEED LIMIT | FORMULAS English | FORMULAS (Metric) |
|---|---|---|
| 40 mph (70 km/h) or less: | $L = \frac{WS^2}{60}$ | $L = \frac{WS^2}{150}$ |
| 45 mph (80 km/h) or greater: | L=(W)(S) | L=0.65(W)(S) |

W = Width of offset in feet (meters).

S = Normal posted speed mph (km/h).

All dimensions are in inches (millimeters) unless otherwise shown.

## SYMBOLS

Work area

Sign

Cone, drum or barricade

Illinois Department of Transportation

APPROVED April 1, 2016
ENGINEER OF SAFETY ENGINEERING

APPROVED April 1, 2016
ENGINEER OF DESIGN AND ENVIRONMENT

ISSUED 1-1-97

| DATE | REVISIONS |
|---|---|
| 4-1-16 | Corrected typo in title. |
| | |
| | |
| 1-1-14 | Revised workers sign |
| | number to agree with |
| | current MUTCD. |

# OFF–RD OPERATIONS, MULTILANE, 15′ (4.5 m) TO 24″ (600 mm) FROM PAVEMENT EDGE

**STANDARD 701101–05**

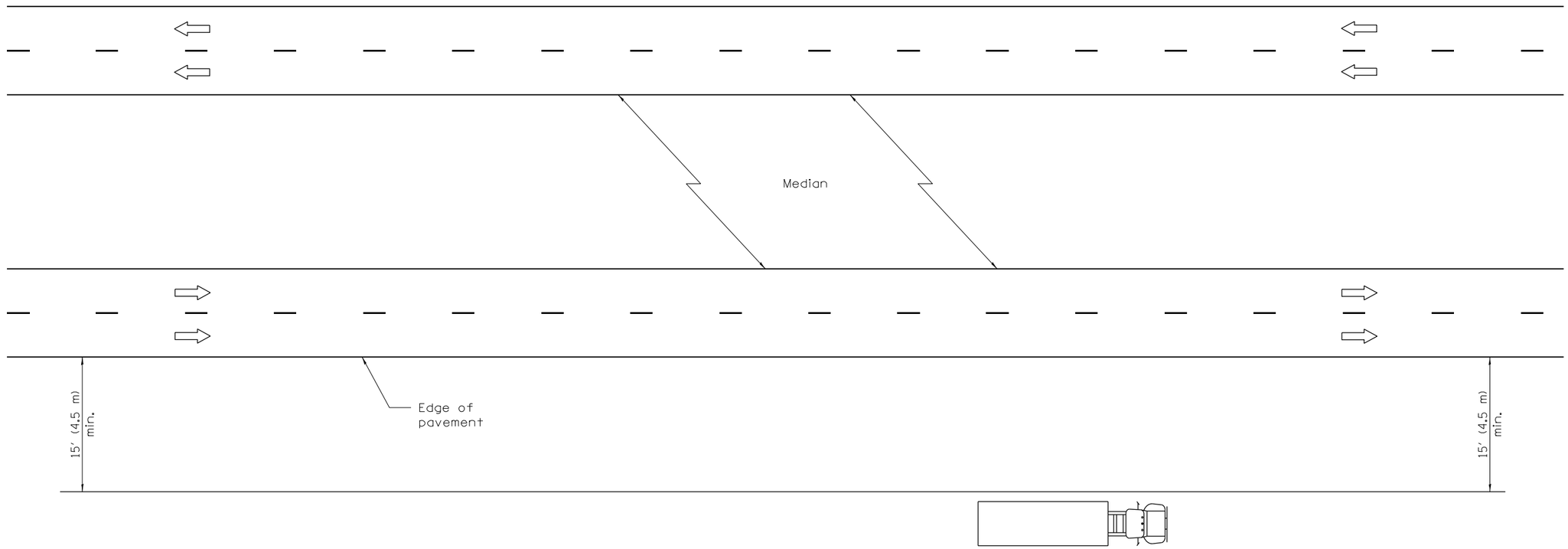


## TYPICAL APPLICATIONS

Landscaping work
Utility work
Fencing contracts

## GENERAL NOTES

This Standard is used where at all times all vehicles, equipment, workers or their activities are more than 15' (4.5 m) from the edge of pavement.

When the work operation requires that two or more work vehicles cross the 15' (4.5 m) clear zone in any one hour, traffic control shall be according to Standard 701101.

This Standard also applies to work performed in the median more than 15' (4.5 m) from either pavement.

All dimensions are in inches (millimeters) unless otherwise shown.

Illinois Department of Transportation

APPROVED January 1, 2009
ENGINEER OF OPERATIONS

APPROVED January 1, 2009
ENGINEER OF DESIGN AND ENVIRONMENT

ISSUED 1-1-97

| DATE | REVISIONS |
|---|---|
| 1-1-05 | Switched units to |
| | English (metric). |
| | |
| 1-1-05 | Revised title. |
| | |
| | |

# OFF–RD OPERATIONS, MULTILANE, MORE THAN 15' (4.5 m) AWAY

STANDARD 701106–02

① Cones at 25′ (8 m) centers for 250′ (75 m). Additional cones may be placed at 50′ (15 m) centers. When drums or barricades are used, the interval between devices may be doubled.

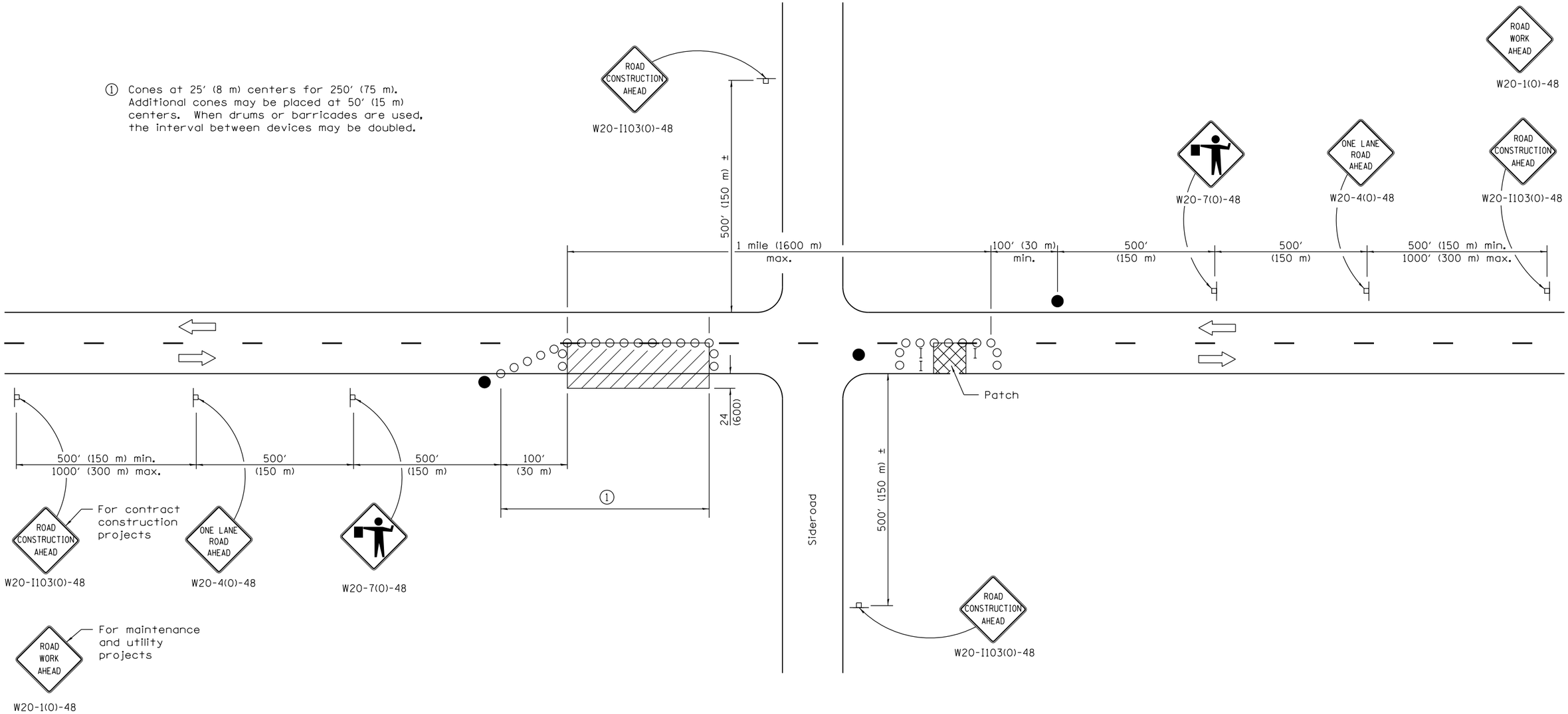


## SYMBOLS

- Work area
- Sign
- Barricade or drum
- Cone, drum or barricade
- Flagger with traffic control sign

## TYPICAL APPLICATIONS

Isolated patching
Utility operations
Storm sewer
Culverts
Cable placement

## GENERAL NOTES

This Standard is used where at any time, any vehicles, equipment, workers or their activities will encroach in the area between the center line and a line 24 (600) outside the edge of pavement for daylight operation.

When the distance between successive work areas exceeds 2000′ (600 m), additional warning signs, flaggers, and taper shall be placed as shown.

All dimensions are in inches (millimeters) unless otherwise shown.

Illinois Department of Transportation

APPROVED January 1, 2011
ENGINEER OF SAFETY ENGINEERING

APPROVED January 1, 2011
ENGINEER OF DESIGN AND ENVIRONMENT

ISSUED 1-1-97

| DATE | REVISIONS |
|---|---|
| 1-1-11 | Revised flagger sign. |
| | |
| | |
| 1-1-09 | Switched units to |
| | English (metric). |
| | Corrected sign No.'s. |

# LANE CLOSURE, 2L, 2W, DAY ONLY, FOR SPEEDS ≥ 45 MPH

**STANDARD 701201–04**

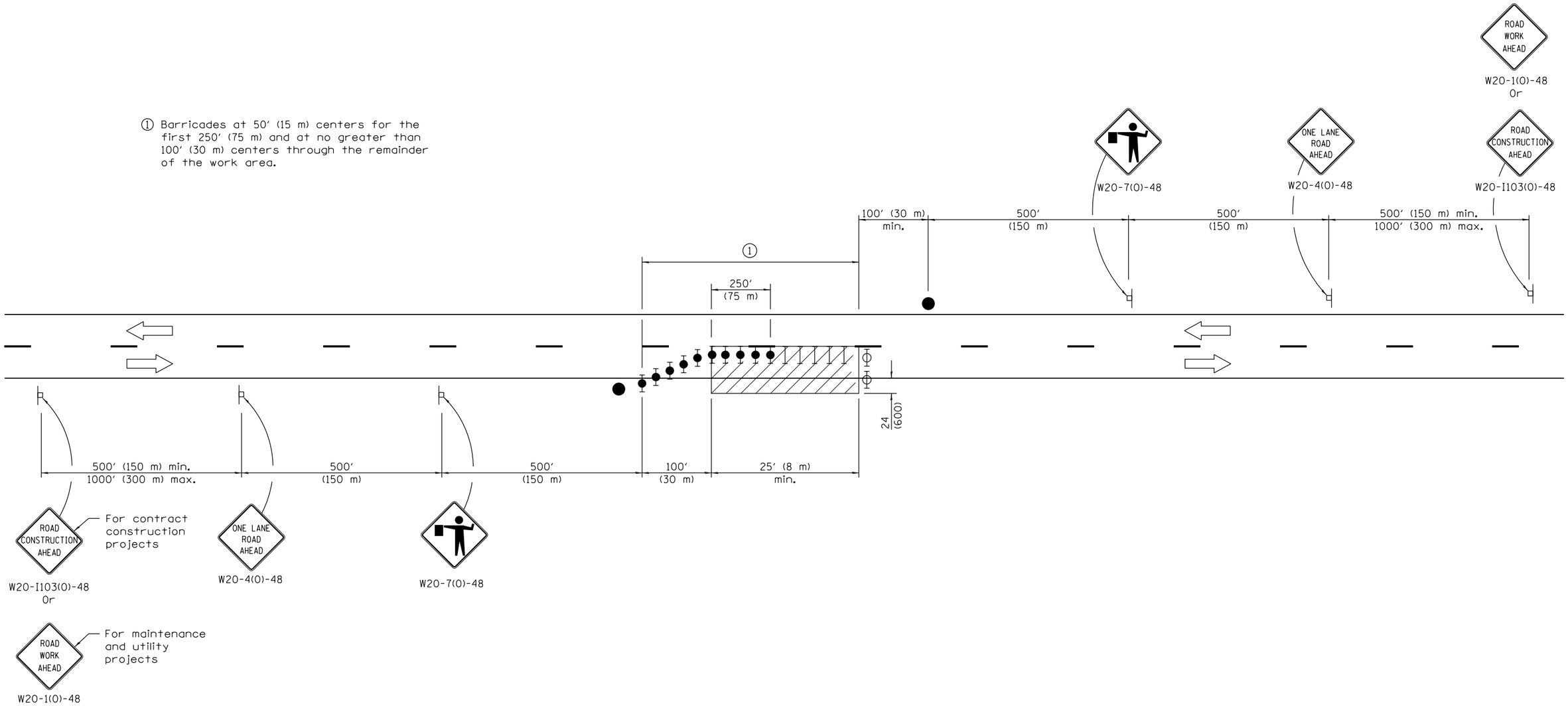


## TYPICAL APPLICATIONS

Isolated patch
Installation of drainage structure
Utility operations

## SYMBOLS

- Work area
- Sign
- Flagger with traffic control sign
- Barricade or drum
- Barricade or drum with flashing light
- Barricade or drum with steady burning light

## GENERAL NOTES

This Standard is used where at any time, any vehicle, equipment, workers or their activities will encroach in the area between the center line and a line 24 (600) from the edge of pavement for nighttime operation.

All dimensions are in inches (millimeters) unless otherwise shown.

Illinois Department of Transportation

APPROVED January 1, 2011
ENGINEER OF SAFETY ENGINEERING

APPROVED January 1, 2011
ENGINEER OF DESIGN AND ENVIRONMENT

ISSUED 1-1-97

| DATE | REVISIONS |
|---|---|
| 1-1-11 | Revised flagger sign. |
| | |
| | |
| 1-1-09 | Switched units to |
| | English (metric). |
| | Corrected sign No.'s. |

# LANE CLOSURE, 2L, 2W, NIGHT ONLY, FOR SPEEDS ≥ 45 MPH

**STANDARD 701206–03**

For any operation that encroaches in the area between the centerline and a line 24 (600) outside the edge of the pavement for a period of less than 15 minutes.

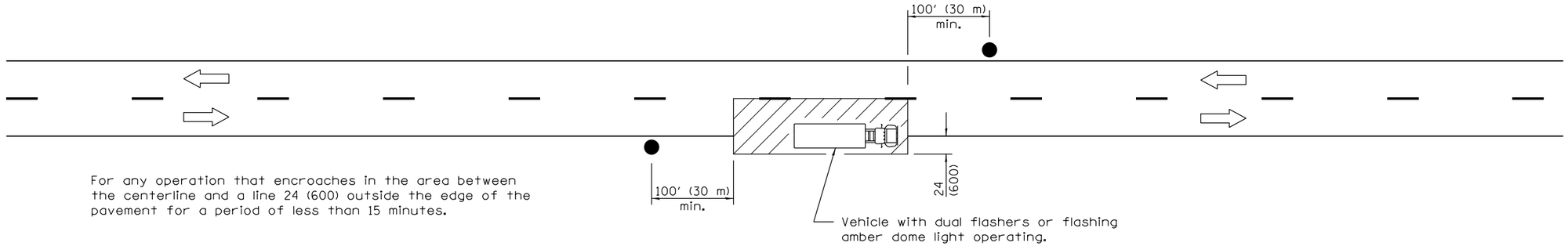


For any operation that is more than 24 (600) outside the edge of the pavement for a period of less than 60 minutes.

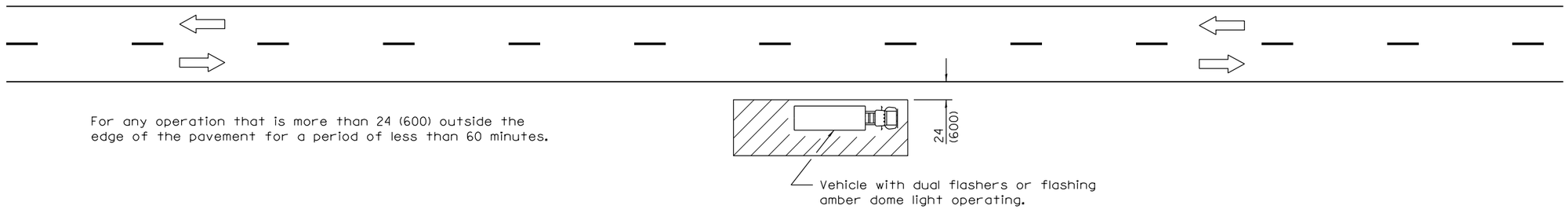


For any operation that encroaches in the area between the centerline and a line 24 (600) outside the edge of the pavement for a period in excess of 15 minutes but less than 60 minutes.

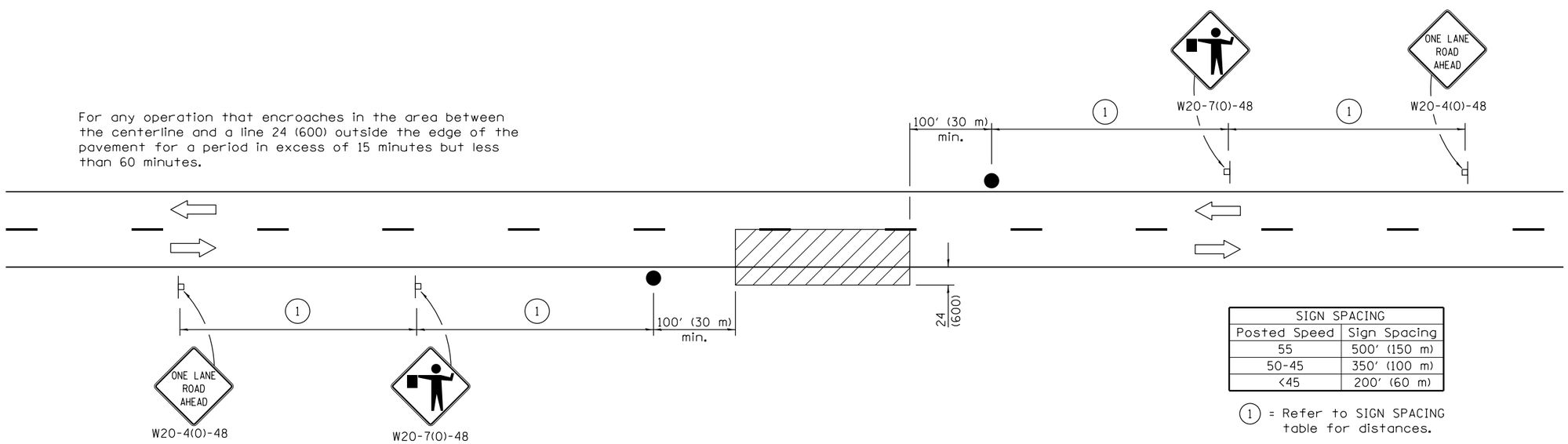


| SIGN SPACING | |
|---|---|
| Posted Speed | Sign Spacing |
| 55 | 500' (150 m) |
| 50-45 | 350' (100 m) |
| <45 | 200' (60 m) |

(1) = Refer to SIGN SPACING table for distances.

All dimensions are in inches (millimeters) unless otherwise shown.

## TYPICAL APPLICATIONS

Marking patches
Field survey
String line
Utility operations
Cleaning up debris on pavement

## SYMBOLS

Work area

Sign on portable or permanent support

Flagger with traffic control sign

Illinois Department of Transportation

APPROVED January 1, 2011
ENGINEER OF SAFETY ENGINEERING

APPROVED January 1, 2011
ENGINEER OF DESIGN AND ENVIRONMENT

ISSUED 1-1-97

| DATE | REVISIONS |
|---|---|
| 1-1-11 | Revised flagger sign. |
| | |
| | |
| 1-1-09 | Switched units to |
| | English (metric). |
| | |

# LANE CLOSURE, 2L, 2W, SHORT TIME OPERATIONS

**STANDARD 701301–04**

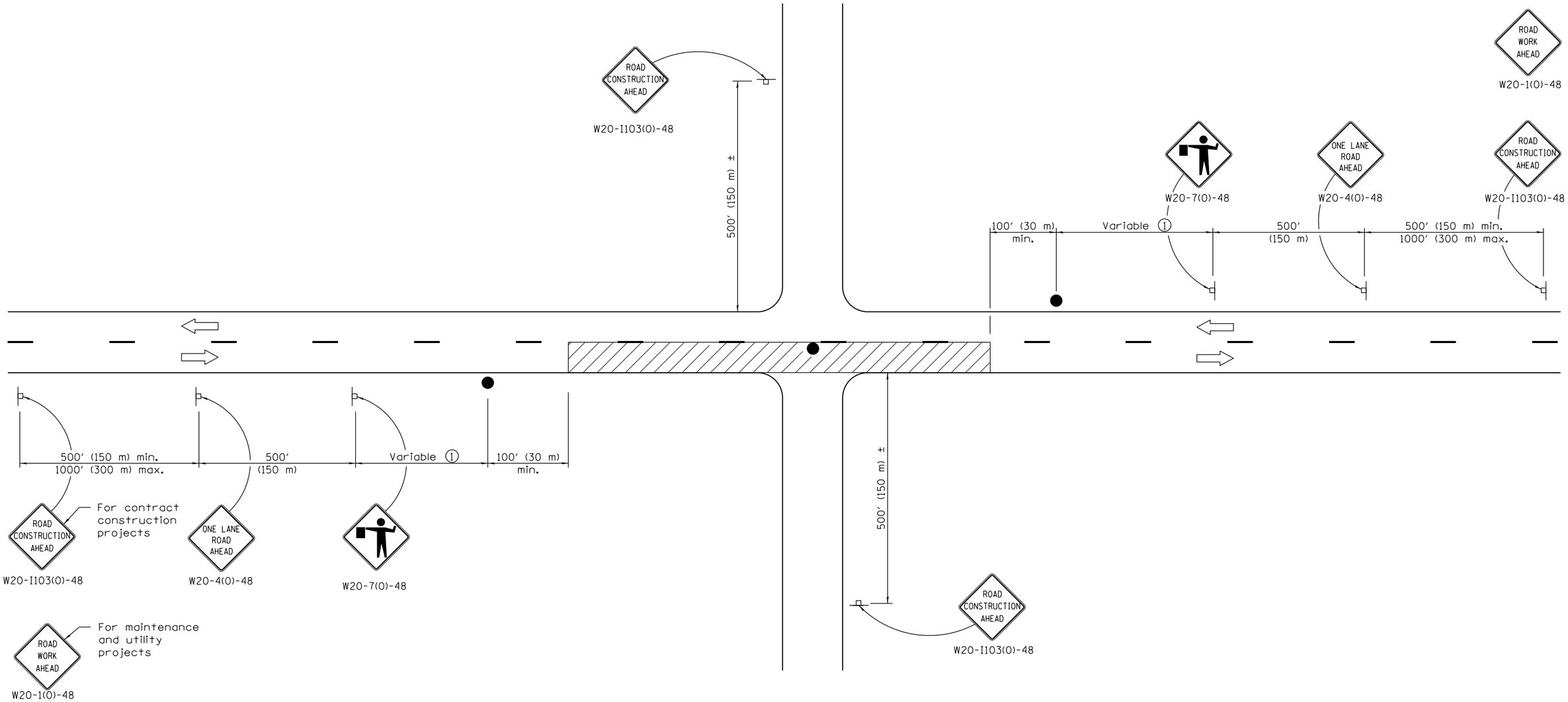


## TYPICAL APPLICATIONS

Bituminous resurfacing
Milling operations
Utility operations
Shoulder operations

① Minimum distance is 200′ (60 m). Maximum distance to be determined by the Engineer but should not exceed ½ the length required for one normal working day's operation or 2 miles (3200 m), whichever is less.

## SYMBOLS

Work area

Sign on portable or permanent support

Flagger with traffic control sign

## GENERAL NOTES

This Standard is used where at any time, any vehicle, equipment, workers or their activities require an intermittent or continuous moving operation on the pavement where the average speed of movement is greater than 1 mph (2 km/h) and less than 4 mph (6 km/h).

When the operation does not exceed 60 minutes, traffic control may be according to Standard 701301.

All dimensions are in inches (millimeters) unless otherwise shown.

Illinois Department of Transportation

APPROVED January 1, 2011
ENGINEER OF SAFETY ENGINEERING

APPROVED January 1, 2011
ENGINEER OF DESIGN AND ENVIRONMENT

ISSUED 1-1-97

| DATE | REVISIONS |
|---|---|
| 1-1-11 | Revised flagger sign. |
| | |
| | |
| 1-1-09 | Switched units to |
| | English (metric). |
| | Corrected sign No.'s. |

# LANE CLOSURE, 2L, 2W, SLOW MOVING OPERATIONS DAY ONLY, FOR SPEEDS ≥ 45 MPH

**STANDARD 701306–03**

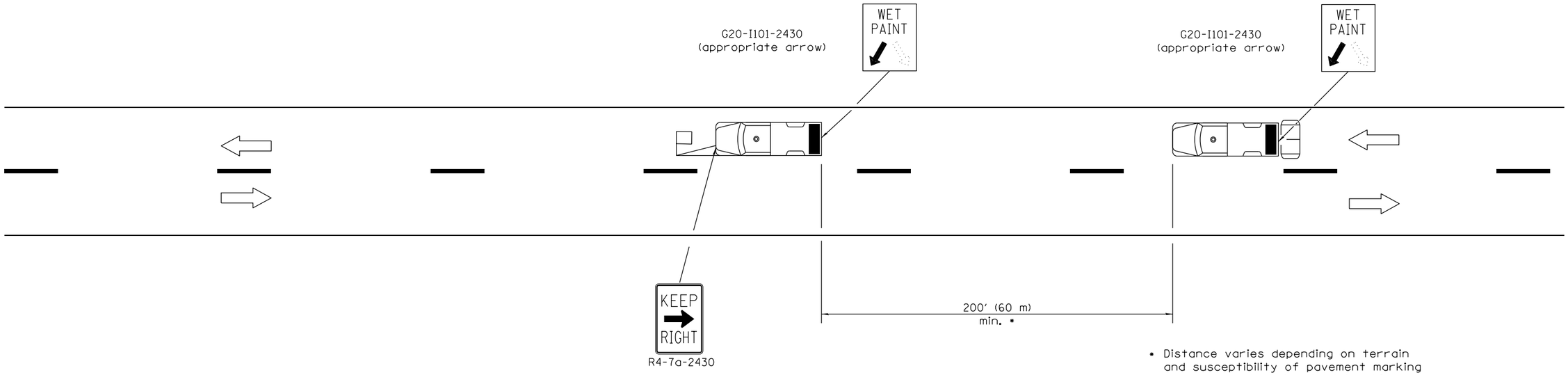


• Distance varies depending on terrain and susceptibility of pavement marking or crack sealant to wheel tracking.

## TYPICAL APPLICATIONS

Landscaping work
Utility work
Pavement marking
Weed spraying
Roadometer measurements
Debris cleanup
Crack pouring

## SYMBOLS

Arrow board (Hazard Mode only)

Truck with headlights, emergency flashers and flashing amber light. (visible from all directions)

18x18 (450x450) min. orange flag (use when guide wheel is used)

Truck mounted attenuator

## GENERAL NOTES

This Standard is used where any vehicle, equipment, workers or their activities will require a continuous moving operation where the average speed is greater than 3 mph (5 km/h).

For shoulder operations not encroaching on the pavement, use DETAIL A, Standard 701426.

All dimensions are in inches (millimeters) unless otherwise shown.

Illinois Department of Transportation

APPROVED January 1, 2009
ENGINEER OF OPERATIONS

APPROVED January 1, 2009
ENGINEER OF DESIGN AND ENVIRONMENT

ISSUED 1-1-97

| DATE | REVISIONS |
|---|---|
| 1-1-09 | Switched units to |
| | English (metric). Omitted |
| | Pass With Care sign. |
| 1-1-00 | Elim. speed restrictions |
| | in Standard title. |
| | |

# LANE CLOSURE 2L, 2W MOVING OPERATIONS– DAY ONLY

**STANDARD 701311–03**

① Type III barricade to be placed when no work is being performed.

② Guardrail/barrier wall reflectors at 25′ (7.6 m) cts. See Standards 704001 & 782006.

③ These vertical panels at 25′ (7.6 m) cts. may be omitted when the guardrail, w/markers, extends to at least this point on the taper.

④ The edge of the post mounted signal head shall be between 24 (610) and 6′ (1.8 m) from edge of shoulder.

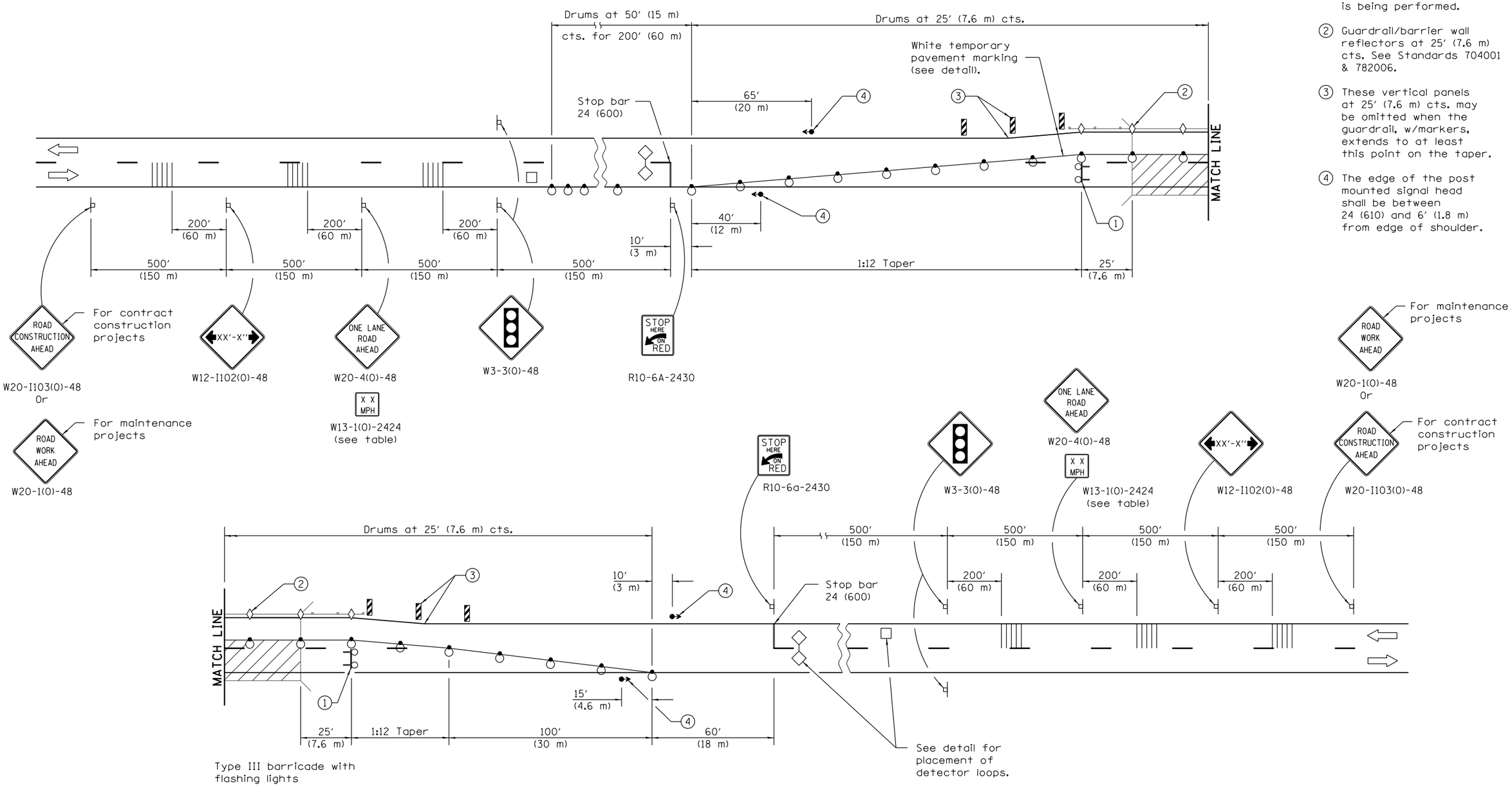


## SYMBOLS

- Work area
- Sign
- Traffic signal
- Detector loops
- Type III barricade with flashing lights
- Drum with steady burning light
- Temporary rumble strip (when specified)
- Crystal, bidirectional guardrail/barrier wall reflector
- Double vertical panel (see detail)

See Sheet 2 for GENERAL NOTES.

| DATE | REVISIONS |
|---|---|
| 4-1-16 | Changed Standard reference |
| | from 635011 to 782006 in |
| | note ②. |
| 1-1-15 | Added note ④. |
| | |
| | |

# LANE CLOSURE, 2L, 2W, BRIDGE REPAIR, FOR SPEEDS > 45 MPH

(Sheet 1 of 2)

**STANDARD 701316–10**

Illinois Department of Transportation

APPROVED April 1, 2016
ENGINEER OF SAFETY ENGINEERING

APPROVED April 1, 2016
ENGINEER OF DESIGN AND ENVIRONMENT

ISSUED 1-1-97

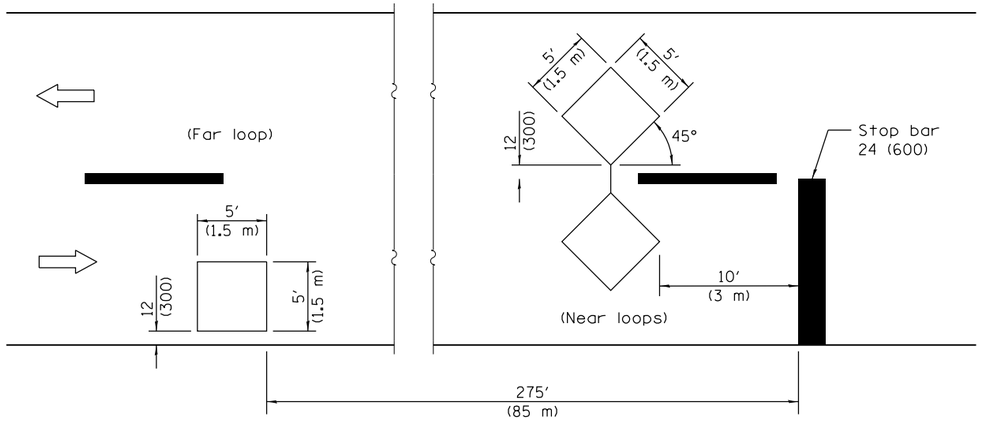


## DETECTOR LOOPS

| TRAFFIC SIGNAL SEQUENCE | | | | | | |
|---|---|---|---|---|---|---|
| PHASE | A | | | B | | |
| INTERVAL | 1 | 2 | 3 | 4 | 5 | 6 |
| NORTHBOUND OR EASTBOUND | G | Y | R | R | R | R |
| SOUTHBOUND OR WESTBOUND | R | R | R | G | Y | R |

| ADVISORY SPEED LIMIT | |
|---|---|
| NORMAL POSTED SPEED | ADVISORY SPEED |
| 55 - 45 mph | 40 mph |
| 40 mph | 35 mph |
| 35 - 30 mph | 30 mph |

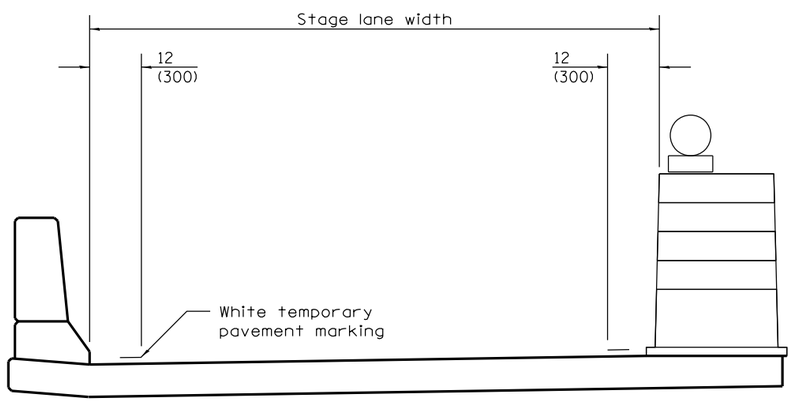


## TEMPORARY PAVEMENT MARKING

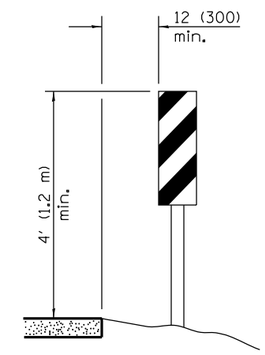


## VERTICAL PANELS

(Post mounted, one each side)

## GENERAL NOTES

This Standard is used where, at any time any vehicle, equipment, workers or their activities will encroach on one lane of a bridge and traffic signals are required.

When traffic signals are not in operation, flaggers shall be used and traffic control devices shall conform to Standard 701201 or 701206.

Existing or temporary pavement markings shall be on both sides of open lane from stop bar to stop bar.

All dimensions are in inches (millimeters) unless otherwise shown.

Illinois Department of Transportation

APPROVED April 1, 2016
ENGINEER OF SAFETY ENGINEERING

APPROVED April 1, 2016
ENGINEER OF DESIGN AND ENVIRONMENT

ISSUED 1-1-97

# LANE CLOSURE, 2L, 2W, BRIDGE REPAIR, FOR SPEEDS > 45 MPH

(Sheet 2 of 2)

**STANDARD 701316–10**

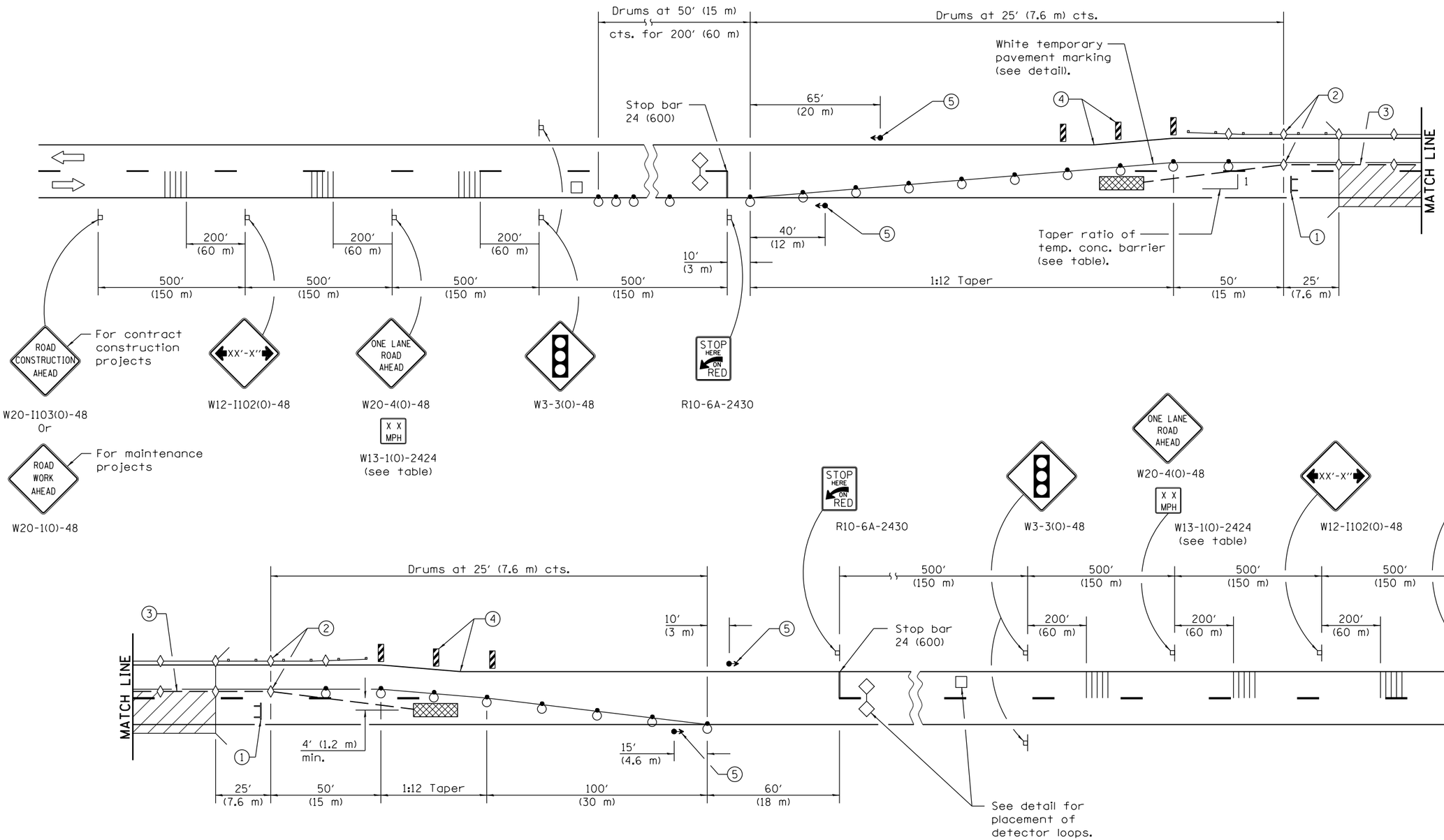


1. Type III barricade to be placed when no work is being performed.
2. Guardrail/barrier wall reflectors at 25′ (7.6 m) cts. See Standards 704001 & 782006.
3. When temp. bridge rail is specified, it shall be connected to the temp. conc. barrier using a traffic barrier terminal Type 11.
4. These vertical panels at 25′ (7.6 m) cts. may be omitted when the guardrail, w/markers, extends to at least this point on the taper.
5. The edge of the post mounted signal head shall be between 24 (610) and 6′ (1.8 m) from edge of shoulder.

## SYMBOLS

- Work area
- Sign
- Type III barricade
- Traffic signal
- Detector loops
- Impact attenuator
- Drum with steady burning bi-directional light
- Temporary concrete barrier
- Temporary rumble strip (when specified)
- Double vertical panel (see detail)
- Crystal, bidirectional guardrail/barrier wall reflector

See Sheet 2 for GENERAL NOTES

| DATE | REVISIONS |
|---|---|
| 4-1-16 | Changed Standard reference |
| | from 635011 to 782006 in |
| | note 2. |
| 1-1-15 | Added note 5. |
| | |
| | |

# LANE CLOSURE, 2L, 2W, BRIDGE REPAIR WITH BARRIER

(Sheet 1 of 2)

**STANDARD 701321–15**

Illinois Department of Transportation

APPROVED April 1, 2016
ENGINEER OF SAFETY ENGINEERING

APPROVED April 1, 2016
ENGINEER OF DESIGN AND ENVIRONMENT

ISSUED 1-1-97

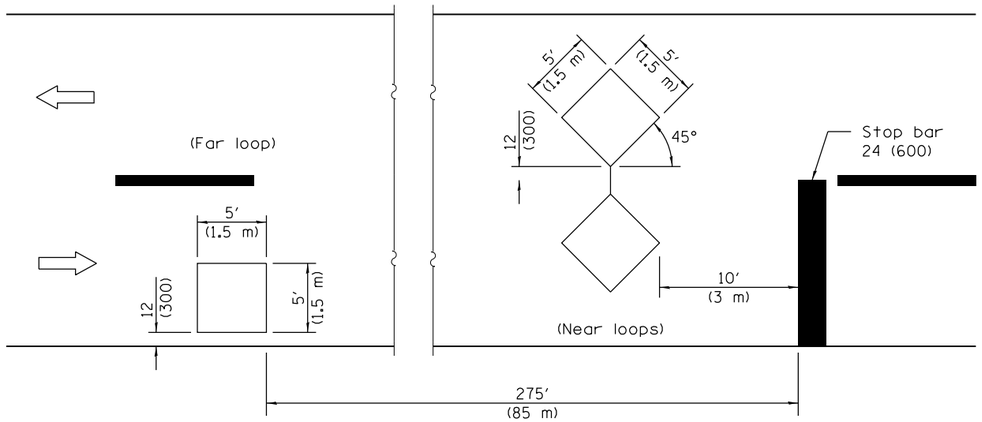


## DETECTOR LOOPS

| TRAFFIC SIGNAL SEQUENCE | | | | | | |
|---|---|---|---|---|---|---|
| PHASE | A | | | B | | |
| INTERVAL | 1 | 2 | 3 | 4 | 5 | 6 |
| NORTHBOUND OR EASTBOUND | G | Y | R | R | R | R |
| SOUTHBOUND OR WESTBOUND | R | R | R | G | Y | R |

| TEMPORARY CONCRETE BARRIER | |
|---|---|
| NORMAL POSTED SPEED | TAPER RATIO |
| 40 mph AND ABOVE | 12:1 |
| BELOW 40 mph | 8:1 |

| ADVISORY SPEED LIMIT | |
|---|---|
| NORMAL POSTED SPEED | ADVISORY SPEED |
| 55 - 45 mph | 40 mph |
| 40 mph | 35 mph |
| 35 - 30 mph | 30 mph |

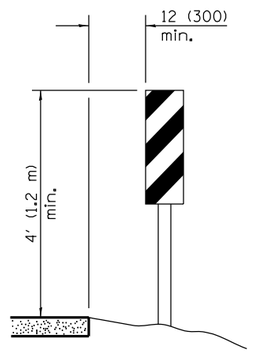


## VERTICAL PANELS

(Post mounted, one each side)

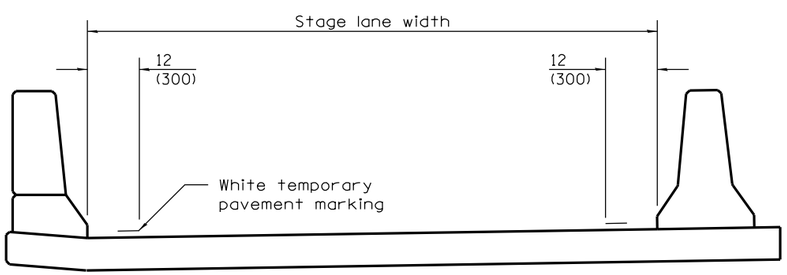


## TEMPORARY PAVEMENT MARKING

## GENERAL NOTES

This Standard is used where, at any time, any vehicle, equipment, workers, or their activities will encroach on one lane of a bridge. Traffic signals and a positive barrier are required.

Traffic signals shall be operational only when all traffic controls are in place. When traffic signals are not in operation, flaggers shall be used and traffic control shall conform to Standard 701201 or 701206.

Temporary concrete barrier shall be according to Standard 704001.

Existing or temporary pavement markings shall be on both sides of open lane from stop bar to stop bar.

All dimensions are in inches (millimeters) unless otherwise shown.

Illinois Department of Transportation

APPROVED April 1, 2016
ENGINEER OF SAFETY ENGINEERING

APPROVED April 1, 2016
ENGINEER OF DESIGN AND ENVIRONMENT

ISSUED 1-1-97

# LANE CLOSURE, 2L, 2W, BRIDGE REPAIR WITH BARRIER

(Sheet 2 of 2)

**STANDARD 701321–15**

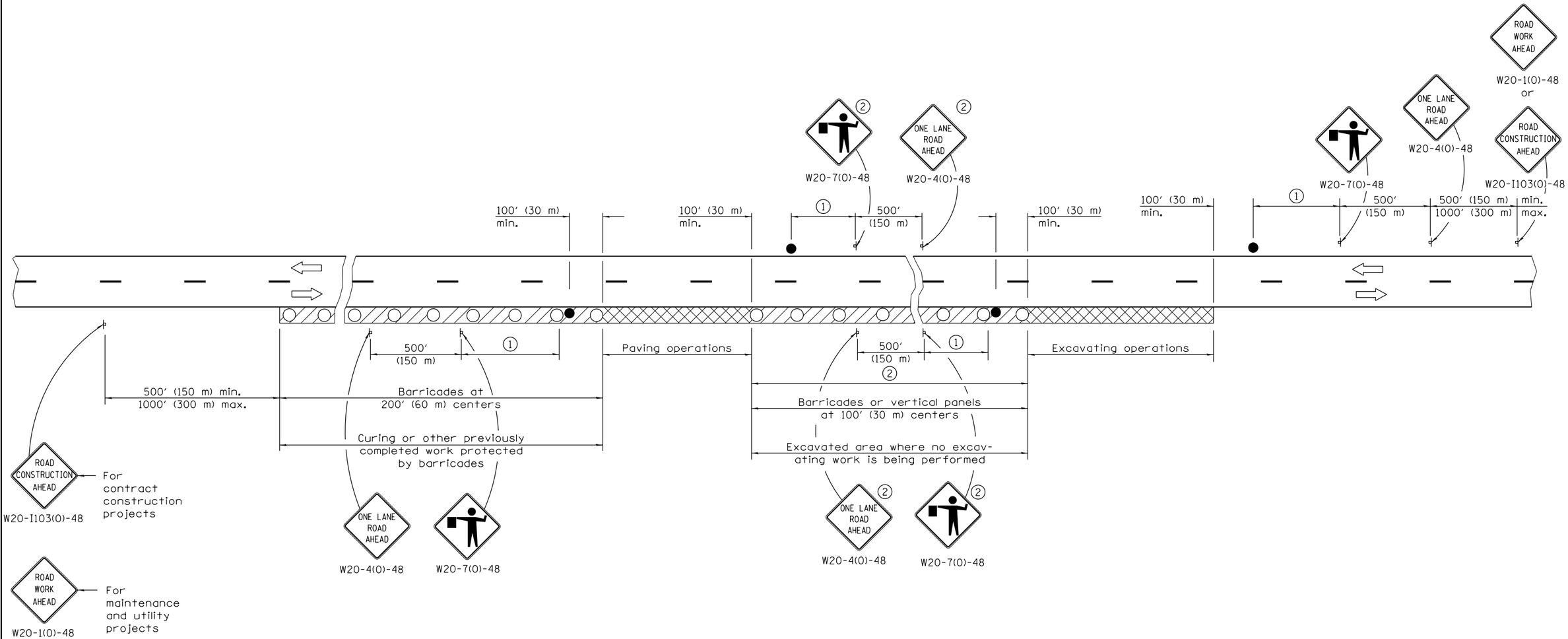


## SYMBOLS

- Work area
- Active Work area
- Sign
- Barricade, drum, or vertical panels
- Flagger with traffic control sign

(1) Minimum distance is 200′ (60 m). Maximum distance to be determined by the Engineer but in no case to exceed the length of ½ day's normal operation or 2 miles (3200 m) whichever is less.

(2) Signs are not required if distance between work operations is less than 2000′ (600 m) unless restricted sight distance exists.

## GENERAL NOTES

This Standard is used where at any time, any vehicle, equipment, workers or their activities will encroach on the pavement during widening operations.

Two flaggers are required for each separate operation.

All dimensions are in inches (millimeters) unless otherwise shown.

Illinois Department of Transportation

APPROVED January 1, 2011
ENGINEER OF SAFETY ENGINEERING

APPROVED January 1, 2011
ENGINEER OF DESIGN AND ENVIRONMENT

ISSUED 1-1-97

| DATE | REVISIONS |
|---|---|
| 1-1-11 | Revised flagger sign. |
| | |
| | |
| 1-1-09 | Switched units to |
| | English (metric). |
| | Corrected sign No.'s. |

# LANE CLOSURE, 2L, 2W, PAVEMENT WIDENING, FOR SPEEDS ≥ 45 MPH

**STANDARD 701326–04**

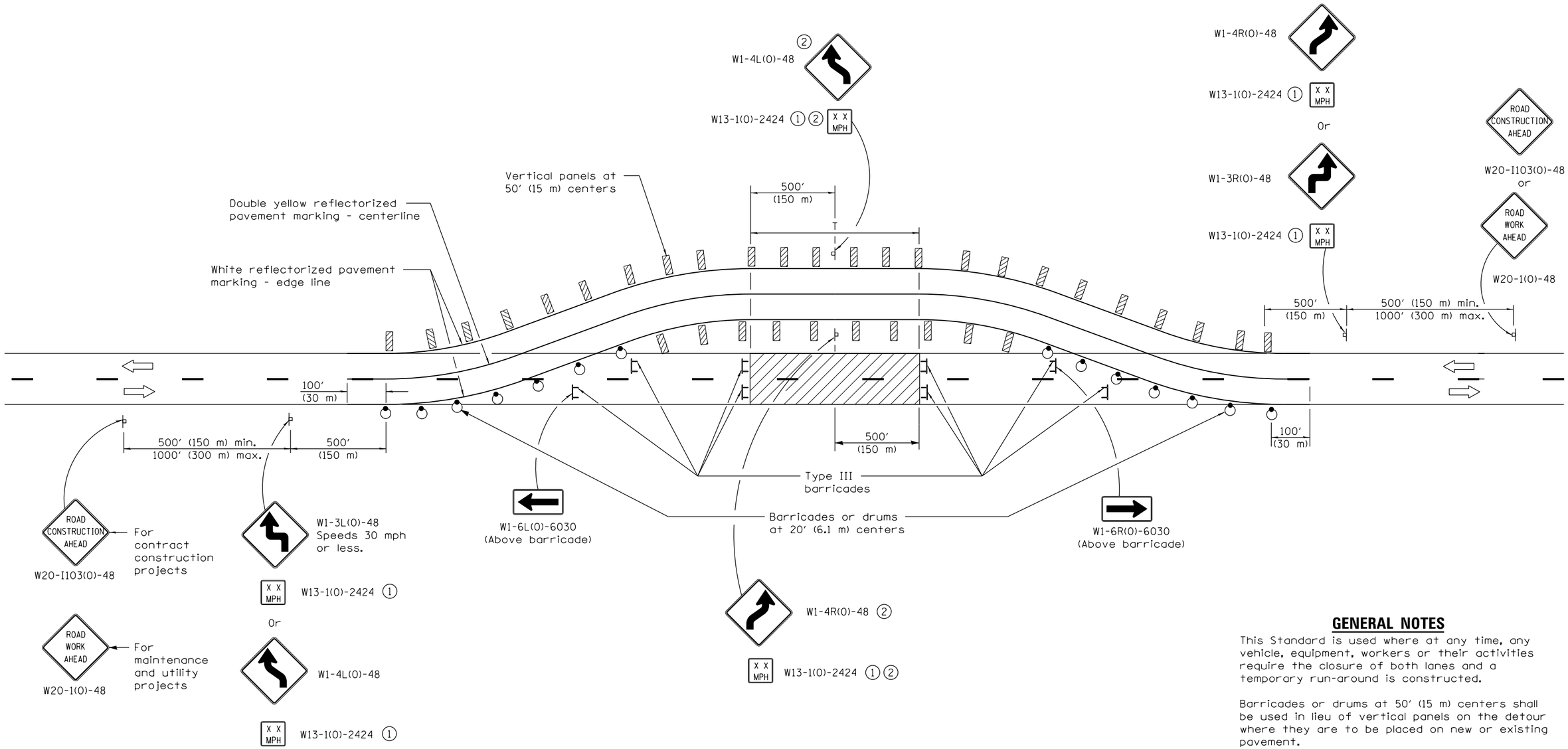


## TYPICAL APPLICATIONS

Bridge construction
Culvert construction

## SYMBOLS

- Work area
- Sign
- Barricade or drum with monodirectional steady burning light
- Double vertical panel
- Type III barricade

① The advisory speed to be shown below the reverse curve (turn) signs shall be determined at the site and approved by the Engineer.

② These signs are not required when T is less than 500′ (150 m).

## GENERAL NOTES

This Standard is used where at any time, any vehicle, equipment, workers or their activities require the closure of both lanes and a temporary run-around is constructed.

Barricades or drums at 50′ (15 m) centers shall be used in lieu of vertical panels on the detour where they are to be placed on new or existing pavement.

Where the tangent distance on the temporary run-around exceeds 600′ (180 m), crystal delineators at 50′ (15 m) centers may be substituted for the vertical panels, or the spacing between vertical panels may be increased to 100′ (30 m) within the limits of the tangent.

All dimensions are in inches (millimeters) unless otherwise shown.

Illinois Department of Transportation

APPROVED January 1, 2011
ENGINEER OF SAFETY ENGINEERING
APPROVED January 1, 2011
ENGINEER OF DESIGN AND ENVIRONMENT

ISSUED 1-1-97

| DATE | REVISIONS |
|---|---|
| 1-1-11 | Changed vertical panel |
| | to double vertical panel. |
| | |
| 1-1-09 | Switched units to |
| | English (metric). |
| | Corrected sign No.'s. |

# LANE CLOSURE, 2L, 2W, WITH RUN-AROUND, FOR SPEEDS ≥ 45 MPH

**STANDARD 701331-04**

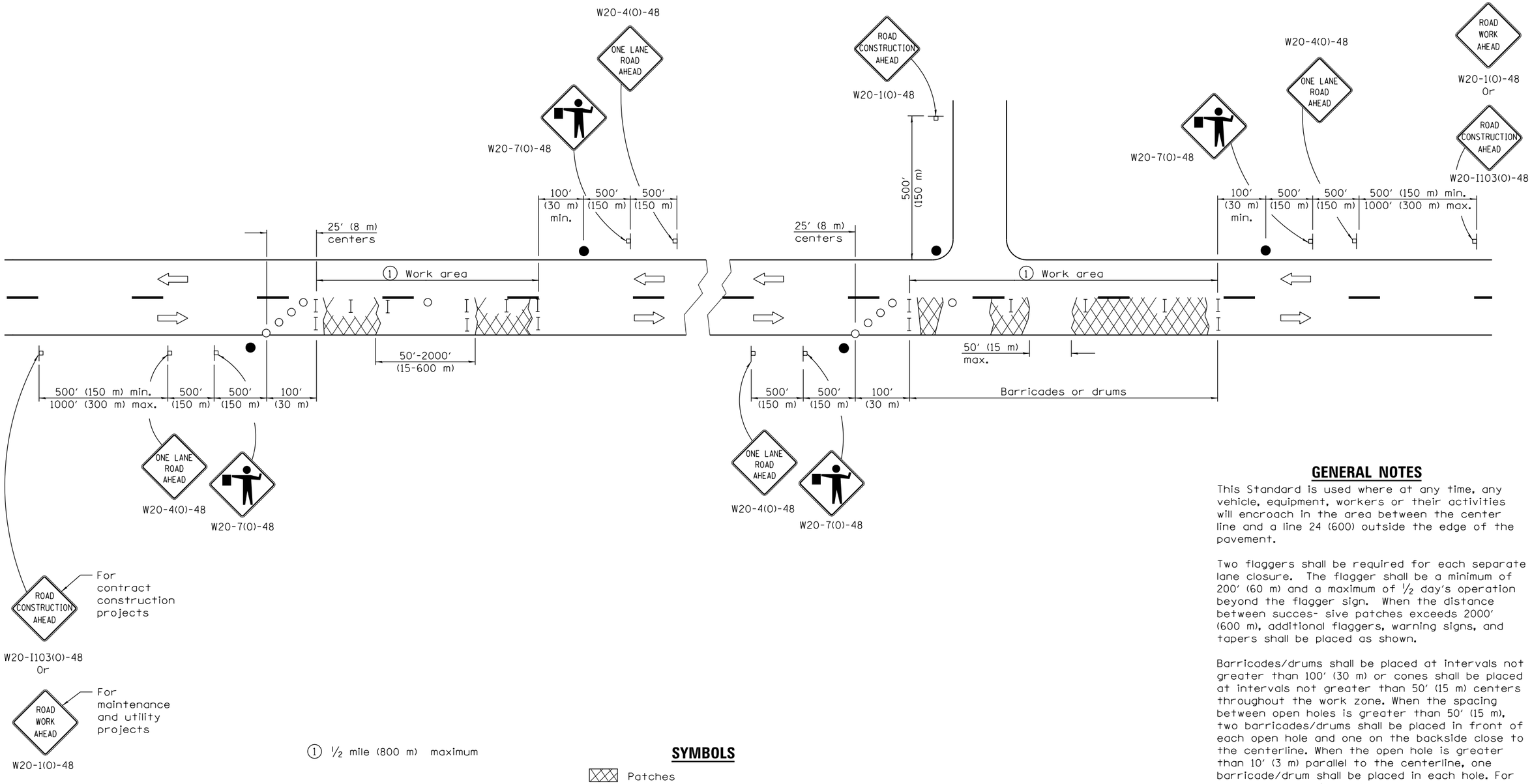


① ½ mile (800 m) maximum

## SYMBOLS

- Patches
- Sign
- Flagger with traffic control sign
- Barricade or drum
- Cone, barricade or drum

## TYPICAL APPLICATIONS

Patching

## GENERAL NOTES

This Standard is used where at any time, any vehicle, equipment, workers or their activities will encroach in the area between the center line and a line 24 (600) outside the edge of the pavement.

Two flaggers shall be required for each separate lane closure. The flagger shall be a minimum of 200′ (60 m) and a maximum of ½ day's operation beyond the flagger sign. When the distance between succes- sive patches exceeds 2000′ (600 m), additional flaggers, warning signs, and tapers shall be placed as shown.

Barricades/drums shall be placed at intervals not greater than 100′ (30 m) or cones shall be placed at intervals not greater than 50′ (15 m) centers throughout the work zone. When the spacing between open holes is greater than 50′ (15 m), two barricades/drums shall be placed in front of each open hole and one on the backside close to the centerline. When the open hole is greater than 10′ (3 m) parallel to the centerline, one barricade/drum shall be placed in each hole. For large holes, barricades/drums shall be placed at 50′ (16 m) centers.

All dimensions are in inches (millimeters) unless otherwise shown.

Illinois Department of Transportation

APPROVED January 1, 2011
ENGINEER OF SAFETY ENGINEERING

APPROVED January 1, 2011
ENGINEER OF DESIGN AND ENVIRONMENT

ISSUED 1-1-97

| DATE | REVISIONS |
|---|---|
| 1-1-11 | Revised flagger sign. |
| | |
| | |
| 1-1-09 | Switched units to |
| | English (metric). |
| | Corrected sign No.'s. |

# LANE CLOSURE, 2L, 2W, WORK AREAS IN SERIES, FOR SPEEDS ≥ 45 MPH

**STANDARD 701336–06**

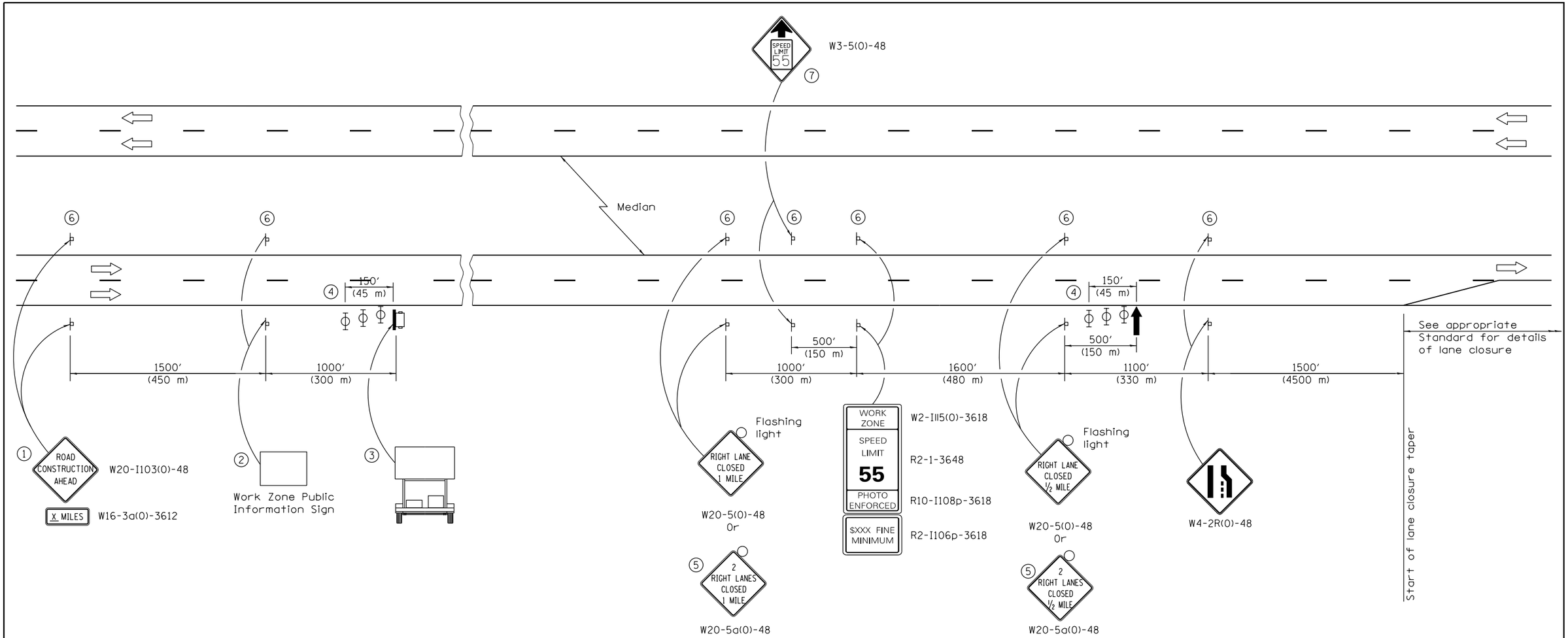


## SYMBOLS

- Arrow board
- Portable changeable message sign
- Sign
- Type II barricade, drum, or vertical barricade with monodirectional flashing light

1. The Road Construction Ahead sign shall be located 3 to 5 miles in advance of the project limits.
2. The message and size of the Work Zone Public Information Sign shall be as specified by the Department.
3. The message board shall be used to display status of lanes within the project. The primary messages shall be:

   "Right Lane Closed" / " x Miles Ahead"
   "Left Lane Closed" / " x Miles Ahead"
   "All Lanes Open"
4. Three, Type II barricades, drums, or vertical barricades at 50′ (15 m) centers.
5. This sign shall be used when 2 lanes are closed.
6. This sign shall be omitted when median width is less than 10′ (3 m).
7. This sign shall only be used if the existing speed limit is greater than 65 mph.

## GENERAL NOTES

This standard is used where at any time a lane is closed on a freeway/expressway. When the left lane is closed, LEFT LANE CLOSED signs shall be substituted for the RIGHT LANE CLOSED signs.

The first two signs and the message board are stationary.

The last four signs and arrow board shall be moved as necessary to maintain the required distance from the start of the lane closure taper(s).

All dimensions are in inches (millimeters) unless otherwise shown.

Illinois Department of Transportation

APPROVED January 1, 2015
ENGINEER OF SAFETY ENGINEERING

APPROVED January 1, 2015
ENGINEER OF DESIGN AND ENVIRONMENT

ISSUED 4-1-04

| DATE | REVISIONS |
|---|---|
| 1-1-15 | Revised '2 RIGHT LANES |
| | CLOSED X MILE' sign |
| | number. |
| 1-1-14 | Added adv. warning speed |
| | reduction sign. Revised |
| | PHOTO ENFORCED sign no. |

# APPROACH TO LANE CLOSURE, FREEWAY/EXPRESSWAY

**STANDARD 701400–08**

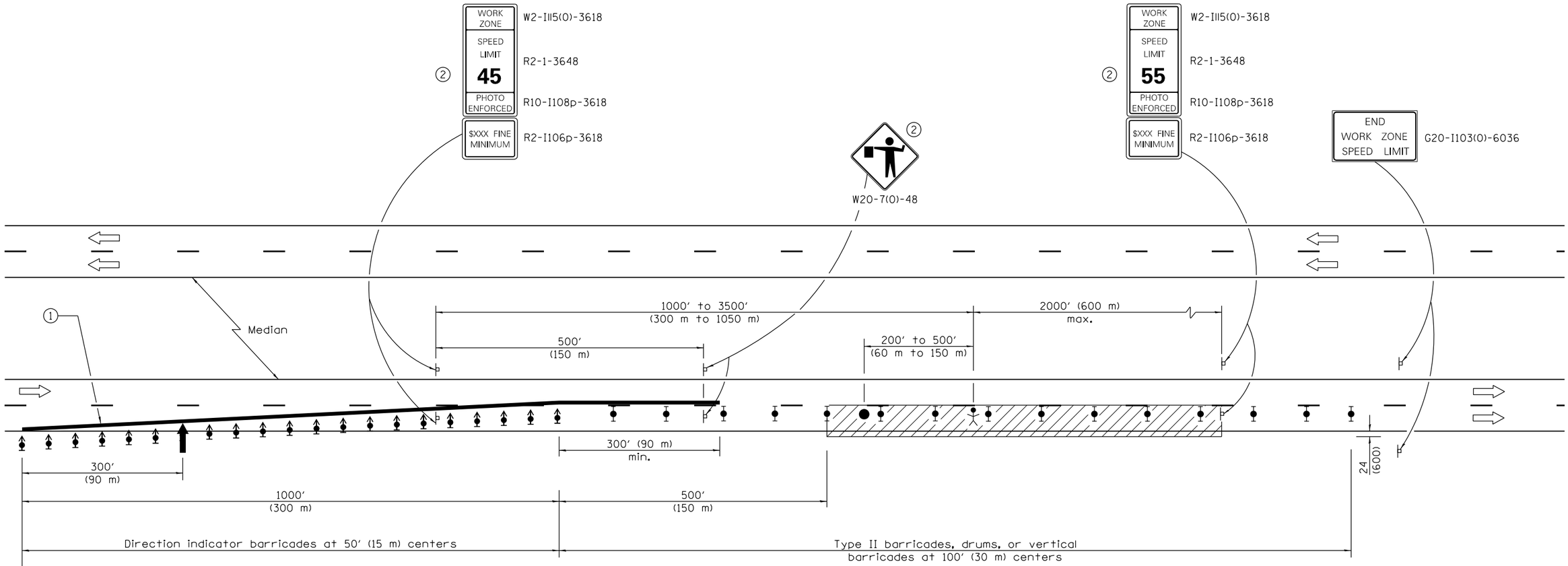


See Standard 701400 for approach
Start of lane closure taper

## SYMBOLS

- Arrow board
- Work area
- Worker
- Sign
- Direction indicator barricade with steady burn monodirectional light
- Type II barricade, drum, or vertical barricade with steady burn monodirectional light
- Flagger with traffic control sign

① Reflectorized temporary pavement marking tape shall be placed throughout the taper and for 300′ (90 m) along-side the work area when the closure time is greater than fourteen days. The edge line shall be white for right lane closure and yellow for left lane closures.

② Work Zone speed limit signs and FLAGGER signs shall be moved as necessary to maintain the required spacing between the signs and the workers in each separate work activity. Work Zone Speed Limit 55 Photo Enforced sign shall be omitted when the work area dictates placement of the sign array within 500′ (150 m) of the End Work Zone Speed Limit Sign.

## GENERAL NOTES

This Standard is used where at any time any vehicle, equipment, workers or their activities will encroach on the lane adjacent to the shoulder, or on the shoulder within 24 (600) of the edge of pavement.

This Standard must always be used in combination with Standard 701400.

This Standard also applies when work is being performed in the left lane. Under these conditions, the setup would be a mirror image to what is shown.

A check barricade shall be placed in the middle of the closed lane and at the shoulder at 1000′ (300 m) centers.

All dimensions are in inches (millimeters) unless otherwise shown.

Illinois Department of Transportation

APPROVED January 1, 2015
ENGINEER OF SAFETY ENGINEERING

APPROVED January 1, 2015
ENGINEER OF DESIGN AND ENVIRONMENT

ISSUED 1-1-97

| DATE | REVISIONS |
|---|---|
| 1-1-15 | Revised END WORK ZONE |
| | SPEED LIMIT sign dimensions. |
| | |
| 1-1-14 | Revised PHOTO ENFORCED |
| | sign number. Relocated |
| | sign at end of work area. |

# LANE CLOSURE, FREEWAY / EXPRESSWAY

## STANDARD 701401–09

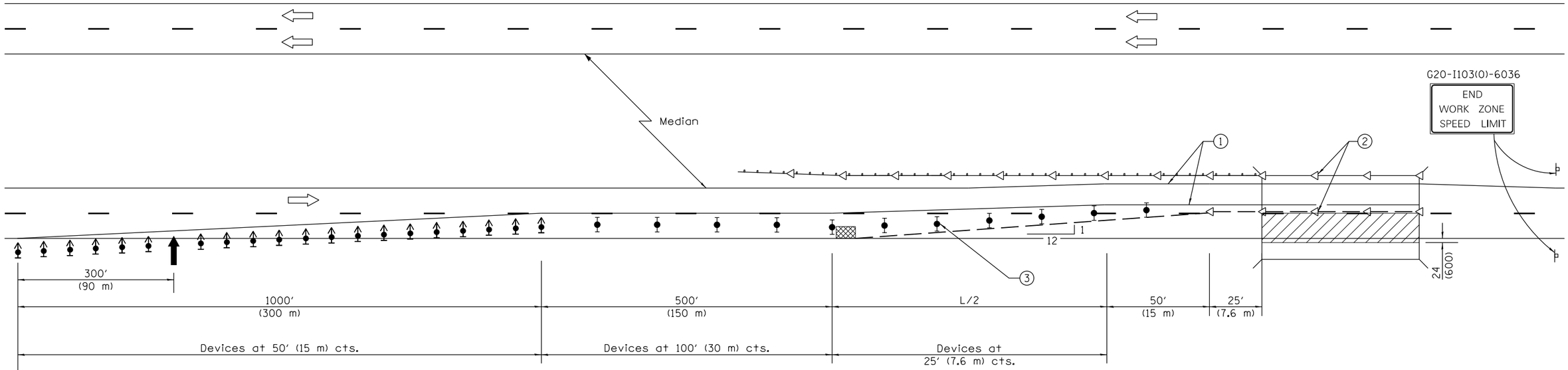


See Standard 701400 for approach
Start of lane closure taper

## SYMBOLS

- Arrow board
- Work area
- Sign
- Direction indicator barricade with steady burn monodirectional light
- Type II barricade, drum, or vertical barricade with steady burn monodirectional light
- Temporary concrete barrier
- Monodirectional guardrail/barrier wall reflector
- Impact attenuator

(1) Temporary pavement marking tape shall be placed throughout the taper and along-side the work area. The right edge line shall be white and the left edge line shall be yellow.

(2) Guardrail/barrier wall reflectors at 25′ (7.6 m). Markers on right shall be shall be crystal and markers on left shall be amber. See Standards 704001 and 782006.

(3) Vertical barricades shall not be used in lane shift taper.

## GENERAL NOTES

This standard is used where at any time any vehicle, equipment, workers or their activities will encroach on the pavement or on the shoulder within 24 (600) of the edge of pavement for daylight operation exceeding one day and where temporary concrete barrier is utilized.

This Standard must always be used in combination with Standard 701400.

When work is being performed in the left lane, the set up would be a mirror image to what is shown.

Temporary concrete barrier shall be according to Standard 704001.

Calculate L as follows:

| NORMAL POSTED SPEED | FORMULAS English | FORMULAS (Metric) |
|---|---|---|
| 45 mph (80 km/h) or more | L=(W)(S) | L=0.65(W)(S) |

W = Width of offset in feet (meters).

S = Normal posted speed in mph (km/h).

All dimensions are in inches (millimeters) unless otherwise shown.

Illinois Department of Transportation

APPROVED April 1, 2016
ENGINEER OF SAFETY ENGINEERING

APPROVED April 1, 2016
ENGINEER OF DESIGN AND ENVIRONMENT

ISSUED 1-1-00

| DATE | REVISIONS |
|---|---|
| 4-1-16 | Added reference to |
| | Standards 704001 and |
| | 782006 in note (2). |
| 1-1-15 | Revised END WORK ZONE SPEED |
| | LIMIT sign dimensions. |
| | |

# LANE CLOSURE, FREEWAY/EXPRESSWAY, WITH BARRIER

**STANDARD 701402–11**

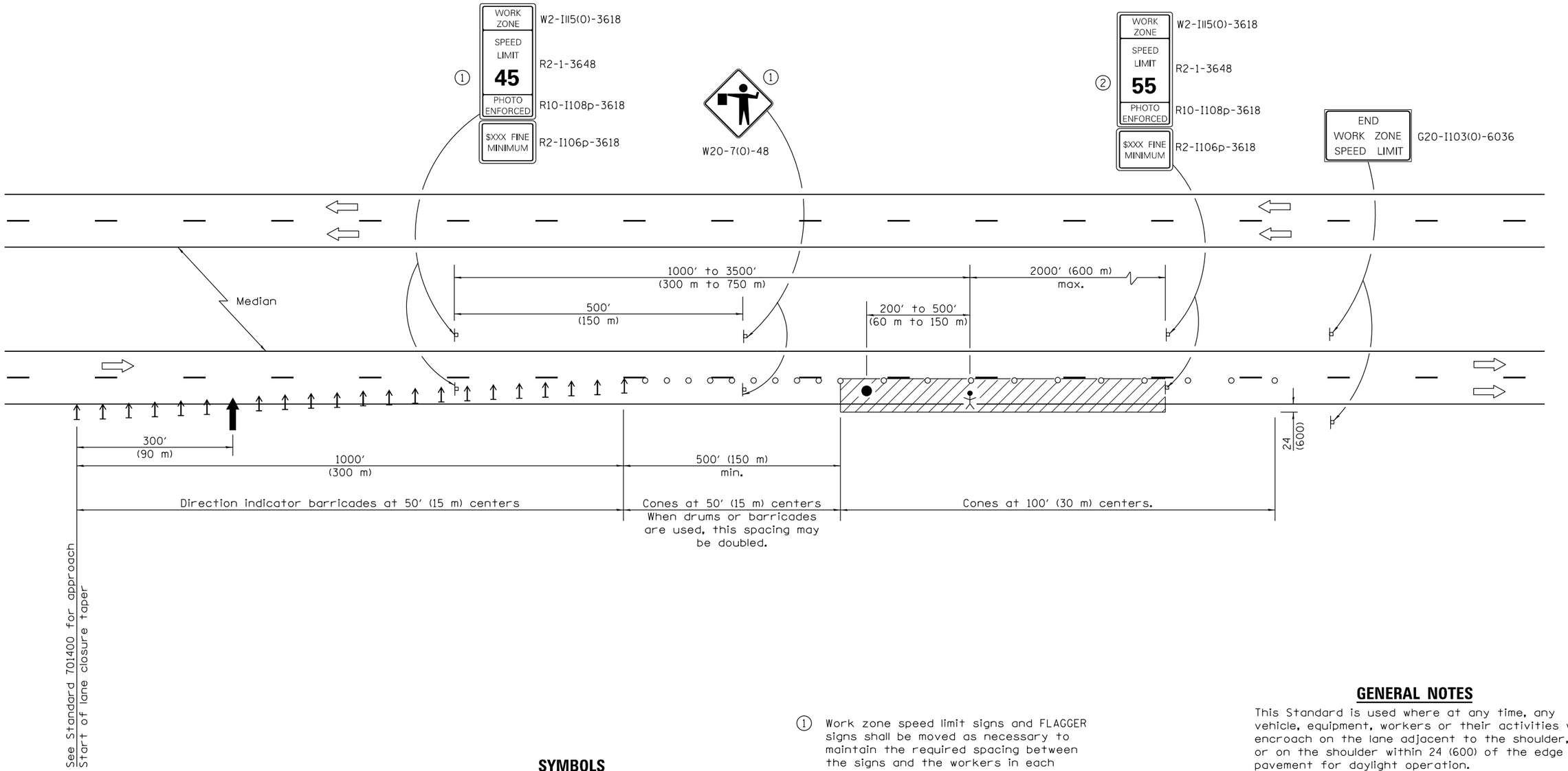


## TYPICAL APPLICATIONS

Pavement patch
Utility operations
Bituminous resurfacing

## SYMBOLS

- Arrow board
- Work area
- Worker
- Sign
- Direction indicator barricade
- Cone, drum or barricade
- Flagger with traffic control sign

1. Work zone speed limit signs and FLAGGER signs shall be moved as necessary to maintain the required spacing between the signs and the workers in each separate work activity.

2. Work Zone Speed Limit 55 Photo Enforced sign shall be omitted when the work area dictates placement of the sign array within 500′ (150 m) of the End Work Zone Speed Limit sign.

## GENERAL NOTES

This Standard is used where at any time, any vehicle, equipment, workers or their activities will encroach on the lane adjacent to the shoulder, or on the shoulder within 24 (600) of the edge of pavement for daylight operation.

This Standard must always be used in combination with Standard 701400.

This Standard also applies when work is being performed in the left lane. Under these conditions, the set up would be a mirror image to what is shown.

All dimensions are in inches (millimeters) unless otherwise shown.

Illinois Department of Transportation

APPROVED April 1, 2016
ENGINEER OF SAFETY ENGINEERING
APPROVED April 1, 2016
ENGINEER OF DESIGN AND ENVIRONMENT

ISSUED 1-1-97

| DATE | REVISIONS |
|---|---|
| 4-1-16 | Rev. dist. between wz speed |
| | limit sign and worker for |
| | consistency with other stds. |
| 1-1-15 | Revised END WORK ZONE SPEED |
| | LIMIT sign dimensions. |
| | |

# LANE CLOSURE, FREEWAY/EXPRESSWAY, DAY OPERATIONS ONLY

**STANDARD 701406–10**

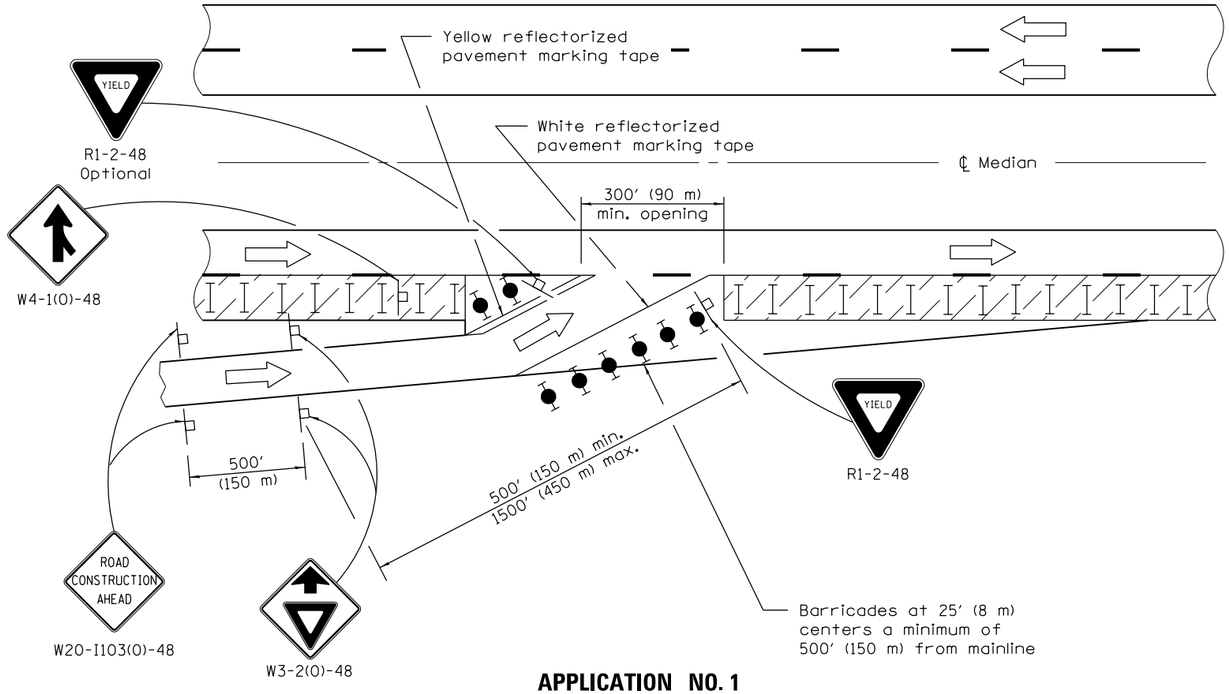


## APPLICATION NO. 1

Application No. 1 depicts a modified entrance ramp. This method shall be utilized whenever existing entrance tapers cannot be retained due to the close proximity of the work zone. The entrance location may be shifted, with the approval of the Engineer, to perform work in the entrance area. Application No. 2 shall be put into effect as soon as possible.

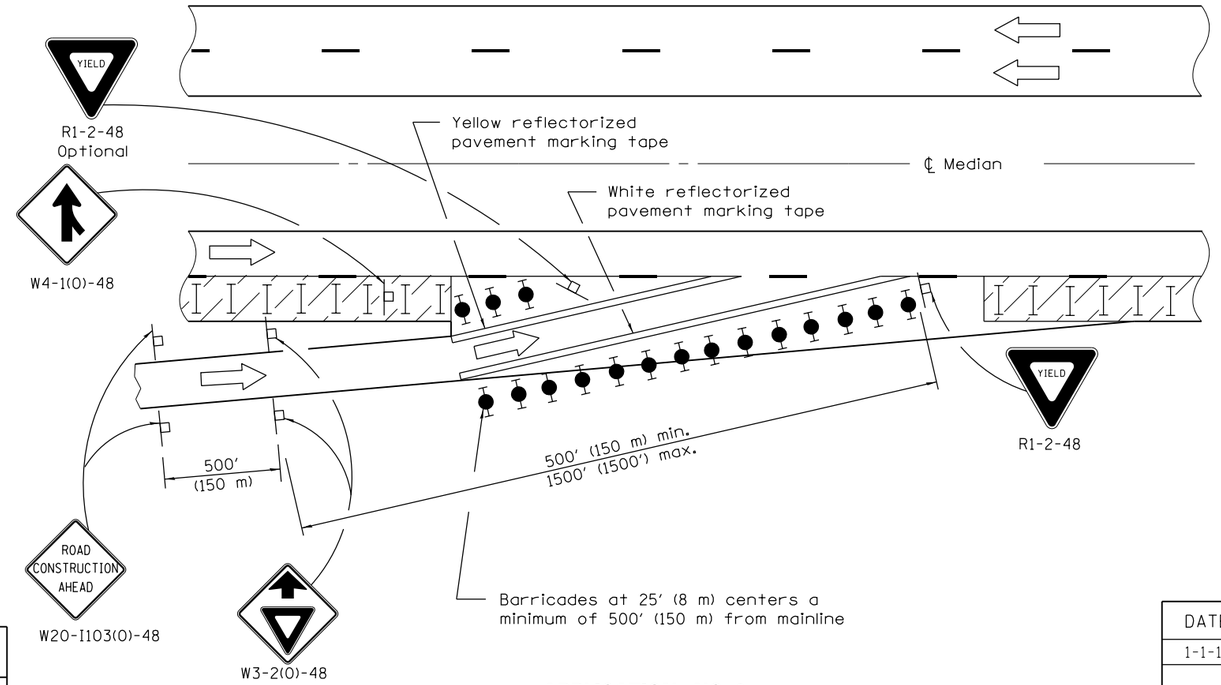


## APPLICATION NO. 2

Application No. 2 depicts a shortening of the normal entrance ramp. This method shall be used whenever the existing geometrics can be retained. Consideration should be given to the entering motorists' line of sight, through, between, or over the delineation devices.

## SYMBOLS

- Work area
- Sign
- Type II barricades or drums with steady burning monodirectional light
- Type II barricades or drums
- Drums with steady burning monodirectional light

## GENERAL NOTES

This Standard is used where, at any time any vehicle, equipment, workers or their activities require a lane closure in close proximity of an exit or entrance ramp and supplements other traffic control Standards for lane closures.

These applications also apply when work is being performed in the left lanes and the ramps enter and exit on the left. Under these conditions, the Exit sign arrow and the Side road symbol sign shall be changed.

Cones may be utilized during daylight operations, at one half the spacing of drums/barricades.

Use of these APPLICATION NO. 1 and APPLICATION NO. 3 shall be limited to five days per location.

When work does not exceed five days, pavement marking tape may be omitted.

All dimensions are in inches (millimeters) unless otherwise shown.

Illinois Department of Transportation

APPROVED January 1, 2015
ENGINEER OF SAFETY ENGINEERING

APPROVED January 1, 2015
ENGINEER OF DESIGN AND ENVIRONMENT

ISSUED 1-1-97

| DATE | REVISIONS |
|---|---|
| 1-1-15 | Revised gen. notes to limit |
| | App's 1 and 3 to five days, |
| | omit pvt. tape for ≤ 5 days. |
| 1-1-12 | Revised merge sign to agree |
| | with MUTCD. Dimensioned EXIT |
| | OPEN AHEAD sign. |

# LANE CLOSURE, MULTILANE, AT ENTRANCE OR EXIT RAMP, FOR SPEEDS ≥ 45 MPH

(Sheet 1 of 2)

**STANDARD 701411–09**

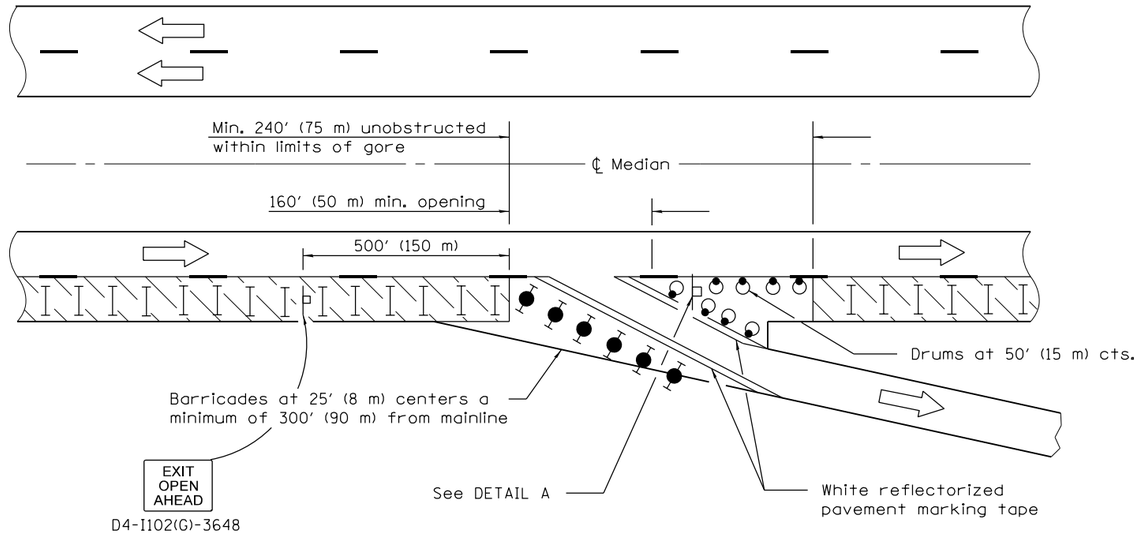


## APPLICATION NO. 3

Application No. 3 depicts a modified exit ramp. The channelizing devices shall provide a clearly defined path for the exiting motorists. The minimum dimensions shown shall be increased as soon as the progress of the work will permit. The open portion of the ramp may be shifted, with the approval of the Engineer, to perform work in stages on the area adjacent to the ramp exit. Application No. 4 shall be put into effect as soon as possible.

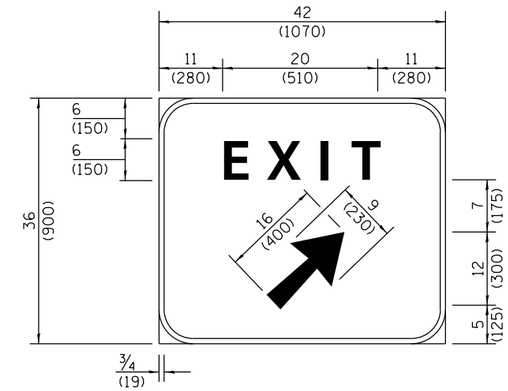


Background - Green
Border and legend - White
"D" size letters

EXIT SIGN - SPECIAL

## DETAIL A

(To be utilized where distance between the two rows of channelizing devices is 6′ (1.8 m) in width.)

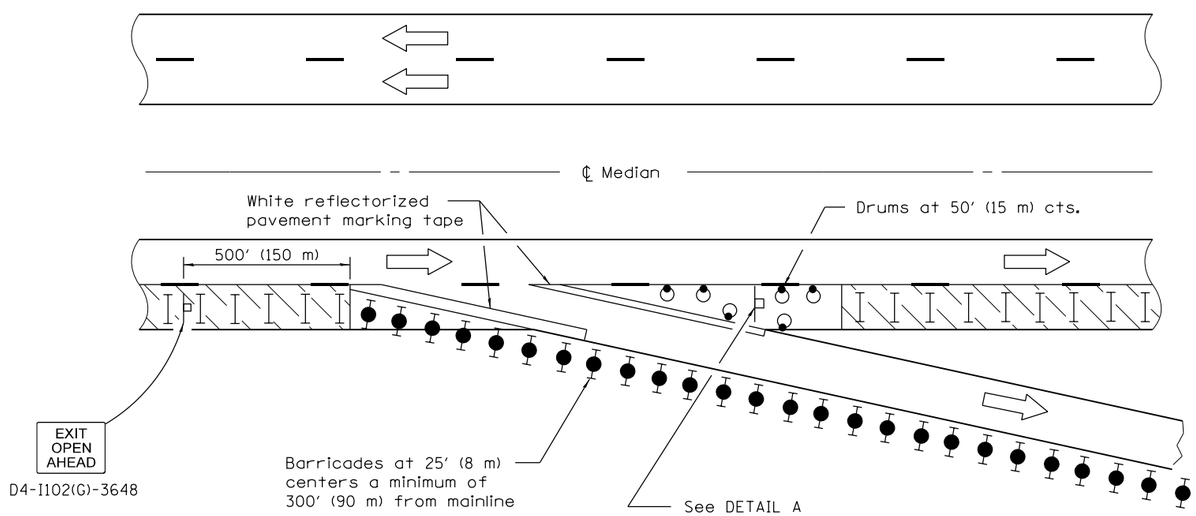


## APPLICATION NO. 4

Application No. 4 depicts an extension of the normal exit ramp. This method shall be used whenever existing geometrics can be retained. Consideration should be given to the exiting motorist's line of sight through, between or over the delineation devices.

Illinois Department of Transportation

APPROVED January 1, 2015
ENGINEER OF SAFETY ENGINEERING
APPROVED January 1, 2015
ENGINEER OF DESIGN AND ENVIRONMENT

ISSUED 1-1-97

# LANE CLOSURE, MULTILANE, AT ENTRANCE OR EXIT RAMP, FOR SPEEDS ≥ 45 MPH

(Sheet 2 of 2)

**STANDARD 701411–09**

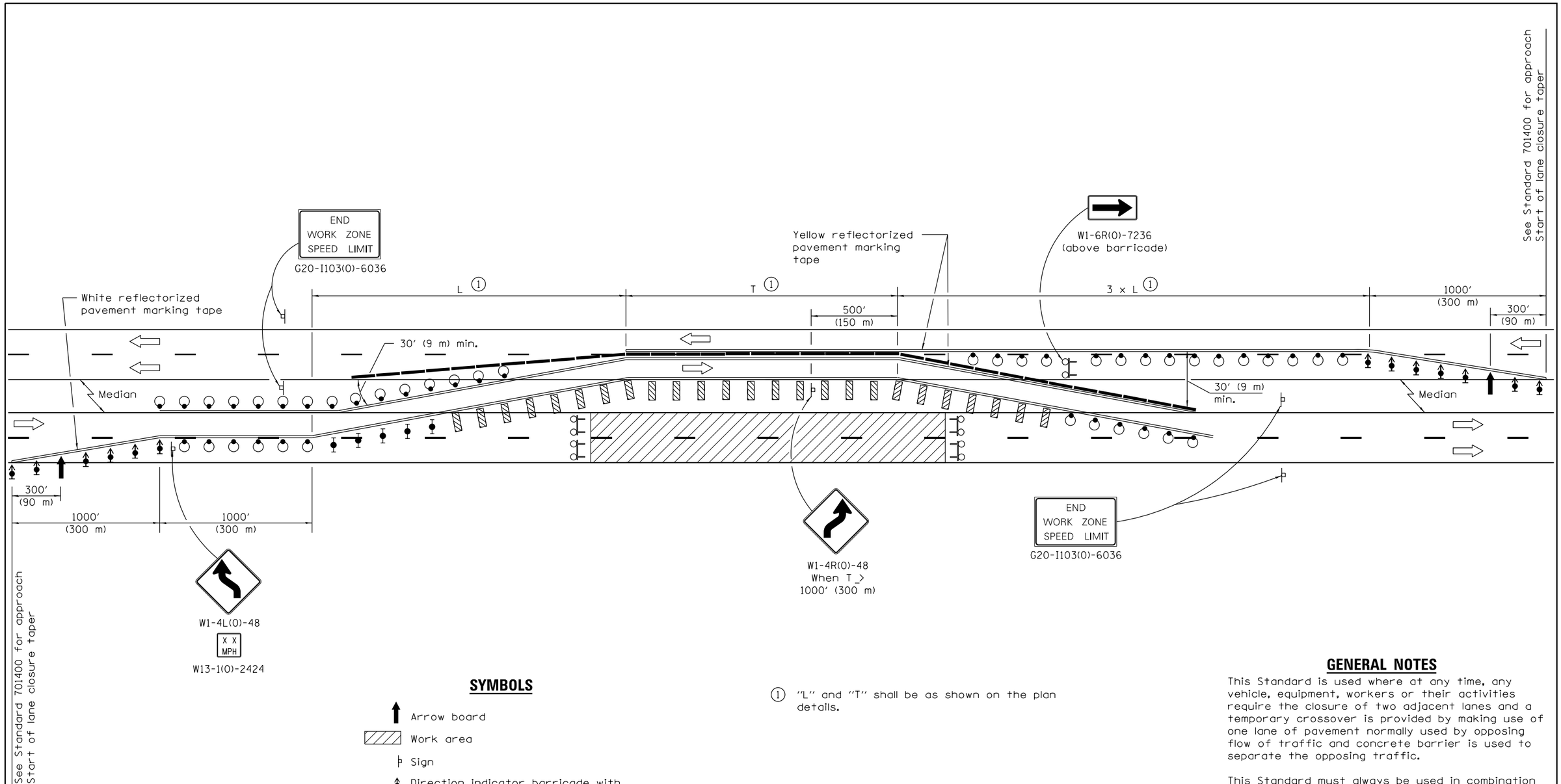


## SYMBOLS

- Arrow board
- Work area
- Sign
- Direction indicator barricade with steady burn monodirectional light
- Type II barricade with steady burn monodirectional light
- Drum with steady burn monodirectional light
- Vertical Panel
- Type III barricade with flashing lights
- Temporary concrete barrier

① "L" and "T" shall be as shown on the plan details.

## GENERAL NOTES

This Standard is used where at any time, any vehicle, equipment, workers or their activities require the closure of two adjacent lanes and a temporary crossover is provided by making use of one lane of pavement normally used by opposing flow of traffic and concrete barrier is used to separate the opposing traffic.

This Standard must always be used in combination with Standard 701400.

All barricades, drums, and vertical panels shall be at 50 ft. (15 m) centers.

Temporay concrete barrier shall be according to Standard 704001.

All dimensions are in inches (millimeters) unless otherwise shown.

Illinois Department of Transportation

APPROVED April 1, 2016
ENGINEER OF SAFETY ENGINEERING

APPROVED April 1, 2016
ENGINEER OF DESIGN AND ENVIRONMENT

ISSUED 1-1-97

| DATE | REVISIONS |
|---|---|
| 4-1-16 | Changed vertical panels |
| | from back-to-back to |
| | single sided. |
| 1-1-15 | Revised END WORK ZONE SPEED |
| | LIMIT sign dimensions. |
| | |

# LANE CLOSURE, FREEWAY / EXPRESSWAY, WITH CROSSOVER AND BARRIER

**STANDARD 701416–09**

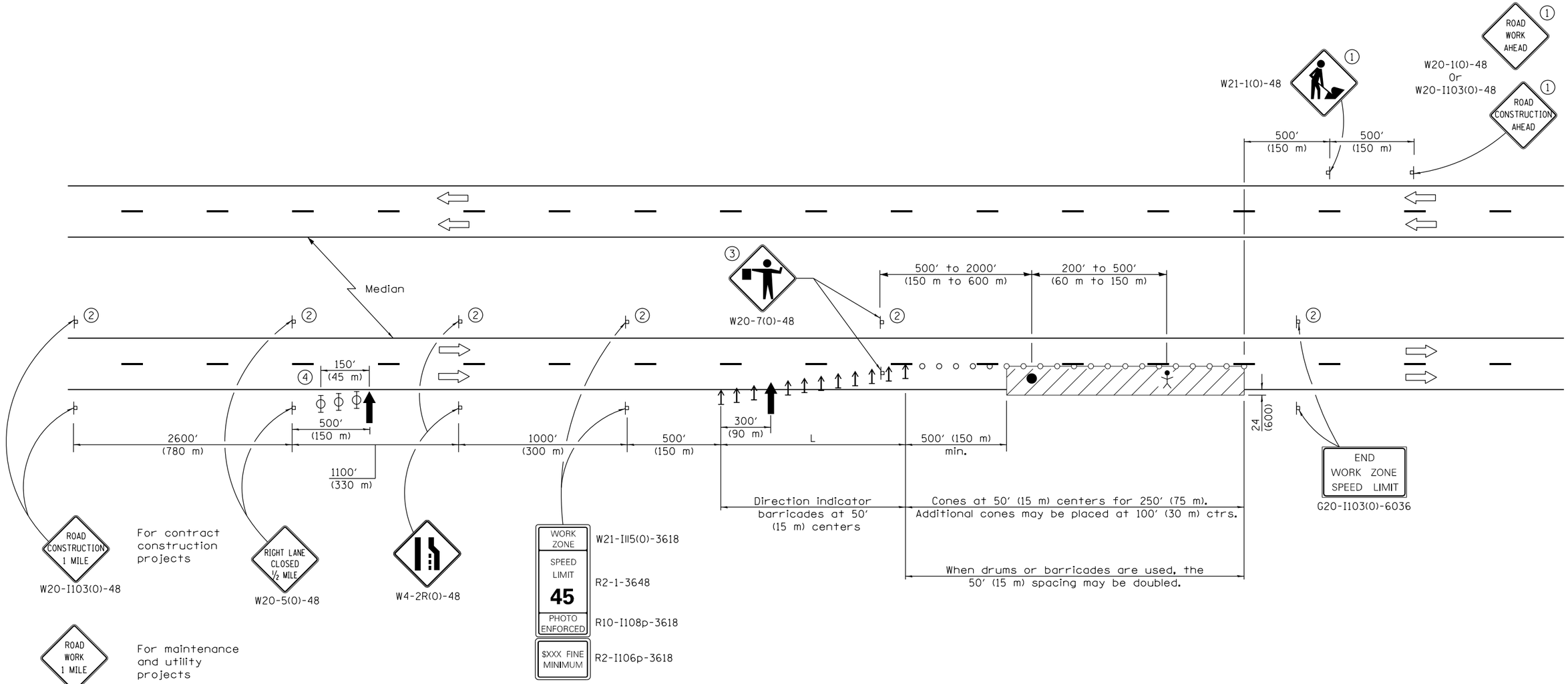


| L = lane width X taper ratio | |
|---|---|
| Normal Posted Speed | Taper Ratio |
| mph | |
| 55 | 55/1 |
| 45 | 45/1 |

## TYPICAL APPLICATIONS

Pavement patch
Utility operations
Bituminous resurfacing

## SYMBOLS

- Arrow board
- Work area
- Sign
- Direction indicator barricade
- Cone, drum or barricade
- Flagger with traffic control sign
- Worker
- Type II barricade, drum, or vertical barricade with monodirectional flashing light

(1) Undivided roadway only with left lane closure in opposite direction.

(2) Omitted when median is less than 10′ (3 m).

(3) FLAGGER signs shall be moved as necessary to maintain the required spacing between the sign and each separate work activity.

(4) Three Type II barricades, drums, or vertical barricades at 50′ (15 m) centers.

## GENERAL NOTES

This Standard is used where at any time, any vehicle, equipment, workers or their activities will encroach on the lane adjacent to the shoulder, or on the shoulder within 24 (600) of the edge of pavement.

This Standard also applies when work is being performed in the left lane. Under these conditions, LEFT LANE CLOSED signs shall be substituted for RIGHT LANE CLOSED signs. On undivided highways, signs shall be added in the opposite direction as shown.

All dimensions are in inches (millimeters) unless otherwise shown.

Illinois Department of Transportation

APPROVED January 1, 2015
ENGINEER OF SAFETY ENGINEERING
APPROVED January 1, 2015
ENGINEER OF DESIGN AND ENVIRONMENT

ISSUED 4-1-04

| DATE | REVISIONS |
|---|---|
| 1-1-15 | Revised END WORK ZONE SPEED |
| | LIMIT sign dimensions. |
| | |
| 1-1-14 | Revised workers sign number |
| | to agree withcurrent MUTCD. |
| | Rev. PHOTO ENFORCED sign no. |

# LANE CLOSURE, MULTILANE, DAY OPERATIONS ONLY, FOR SPEEDS ≥ 45 MPH TO 55 MPH

**STANDARD 701421–07**

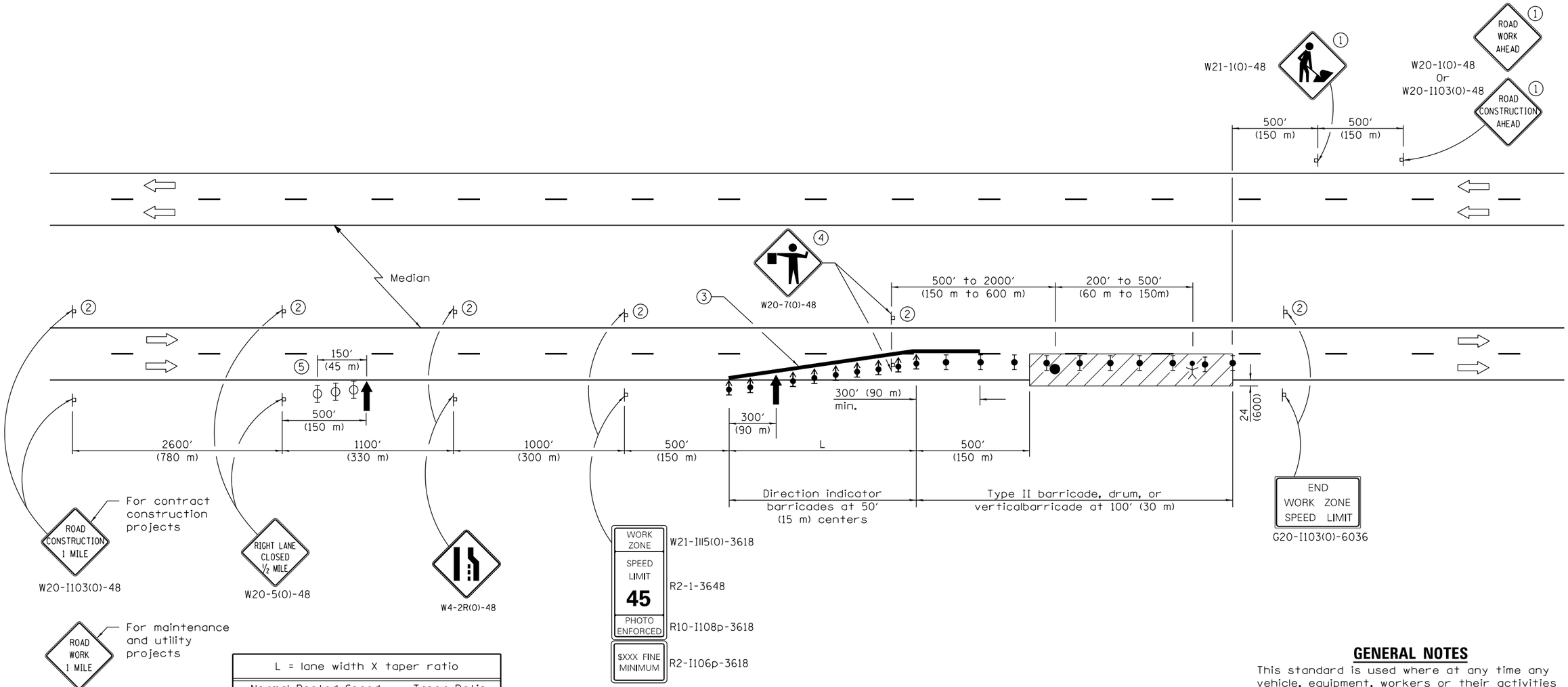


| L = lane width X taper ratio | |
|---|---|
| Normal Posted Speed | Taper Ratio |
| mph | |
| 55 | 55/1 |
| 45 | 45/1 |

## SYMBOLS

- Arrow board
- Work area
- Sign
- Direction indicator barricade with steady burn monodirectional light
- Type II barricade, drum, or vertical barricade with steady burn monodirectional light
- Flagger with traffic control sign
- Worker
- Type II barricade, drum, or vertical barricade with monodirectional flashing light

1. Undivided roadway only with left lane closure in opposite direction.
2. Omitted when median is less than 10′ (3 m).
3. Reflectorized temporary pavement marking tape shall be placed throughout the taper and for 300′ (90 m) along-side the work area where the closure time is greater than fourteen days. The edge line shall be white for right lane closures and yellow for left lane closures.
4. FLAGGER signs shall be moved as necessary to maintain the required spacing between the sign and each separate work activity.
5. Three Type II barricades, drums, or vertical barricades at 50′ (15 m) centers.

## GENERAL NOTES

This standard is used where at any time any vehicle, equipment, workers or their activities will encroach on the lane adjacent to the shoulder, or on the shoulder within 24 (600) of the edge of pavement for daylight operation exceeding one day.

This standard also applies when work is being performed in the left lane. Under these conditions LEFT LANE CLOSED signs shall be substituted for RIGHT LANE CLOSED signs. On undivided highways, signs shall be added in the opposite direction as shown.

A check barricade shall be placed in the middle of the closed lane and at the shoulder at 1000′ (300 m) centers.

All dimensions are in inches (millimeters) unless otherwise shown.

Illinois Department of Transportation

APPROVED April 1, 2016
ENGINEER OF SAFETY ENGINEERING

APPROVED April 1, 2016
ENGINEER OF DESIGN AND ENVIRONMENT

ISSUED 4-1-04

| DATE | REVISIONS |
|---|---|
| 4-1-16 | Added steady burn |
| | monodirectional lights |
| | to devices at work area. |
| 1-1-15 | Revised END WORK ZONE SPEED |
| | LIMIT sign dimensions. |
| | |

# LANE CLOSURE, MULTILANE, FOR SPEEDS ≥ 45 MPH TO 55 MPH

**STANDARD 701422–08**

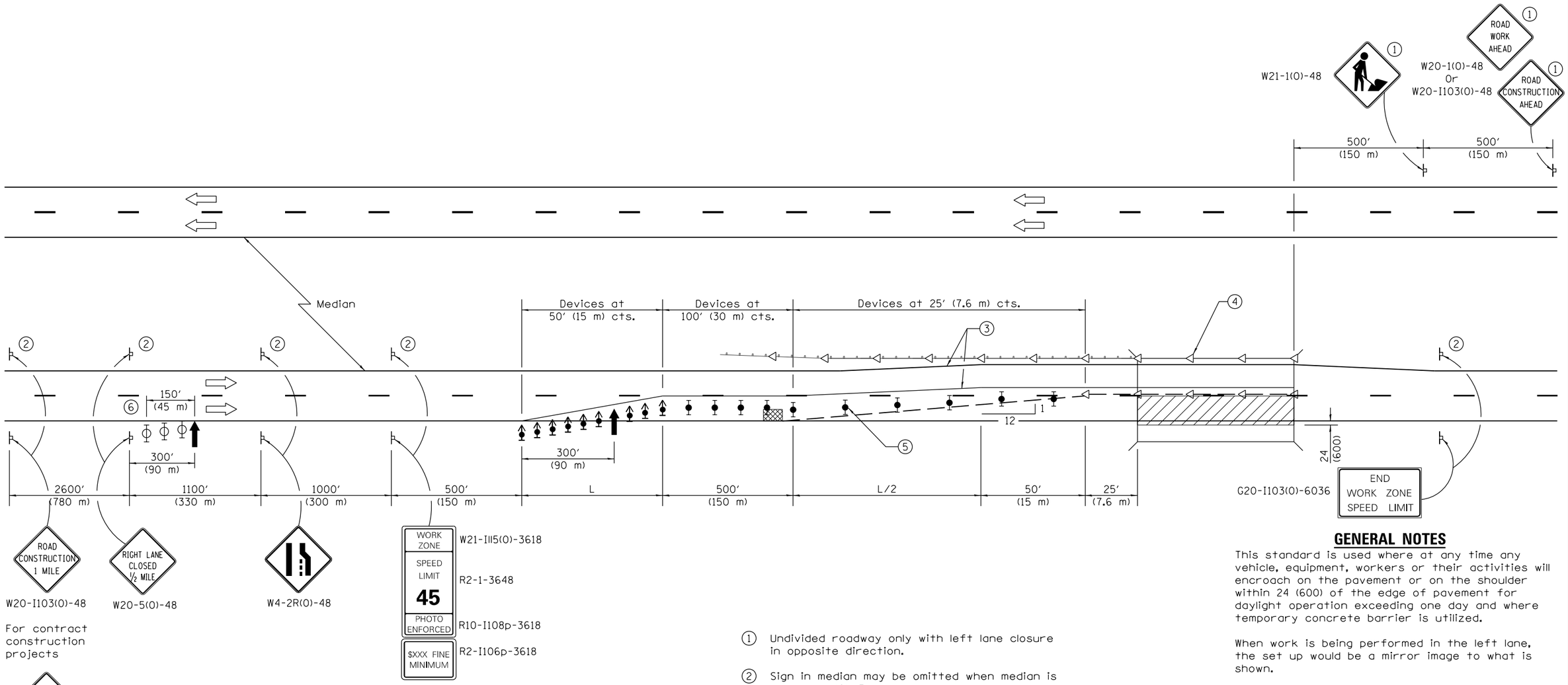


For contract construction projects

For maintenance and utility projects

## SYMBOLS

- Arrow board
- Work area
- Sign
- Direction indicator barricade with steady burn monodirectional light
- Type II barricade, drum, or vertical barricade with steady burn monodirectional light
- Temporary concrete barrier
- Monodirectional guardrail/barrier wall reflector
- Impact attenuator
- Type II barricade, drum, or vertical barricade with monodirectional flashing light

1. Undivided roadway only with left lane closure in opposite direction.
2. Sign in median may be omitted when median is less than 10′ (3 m).
3. Temporary pavement marking tape shall be placed throughout the taper and along-side the work area. The right edge line shall be white and the left edge line shall be yellow.
4. Guardrail/barrier wall reflectors at 25′ (7.6 m). Markers on right shall be crystal and markers on left shall be amber. See Standards 704001 and 782006.
5. Verticle barricades shall not be used in lane shift taper.
6. Three Type II barricades, drums, or vertical barricades at 50′ (15 m) centers.

## GENERAL NOTES

This standard is used where at any time any vehicle, equipment, workers or their activities will encroach on the pavement or on the shoulder within 24 (600) of the edge of pavement for daylight operation exceeding one day and where temporary concrete barrier is utilized.

When work is being performed in the left lane, the set up would be a mirror image to what is shown.

Calculate L as follows:

| NORMAL POSTED SPEED | FORMULAS English | FORMULAS (Metric) |
|---|---|---|
| 45 mph (80 km/h) or more | L=(W)(S) | L=0.65(W)(S) |

W = Width of offset in feet (meters).

S = Normal posted speed in mph (km/h).

All dimensions are in inches (millimeters) unless otherwise shown.

Illinois Department of Transportation

APPROVED April 1, 2016
ENGINEER OF SAFETY ENGINEERING

APPROVED April 1, 2016
ENGINEER OF DESIGN AND ENVIRONMENT

ISSUED 1-1-00

| DATE | REVISIONS |
|---|---|
| 4-1-16 | Corrected reference to standard in note 4. |
| 1-1-15 | Revised END WORK ZONE SPEED LIMIT sign dimensions. |

# LANE CLOSURE, MULTILANE, WITH BARRIER, FOR SPEEDS ≥ 45 MPH TO 55 MPH

**STANDARD 701423–09**

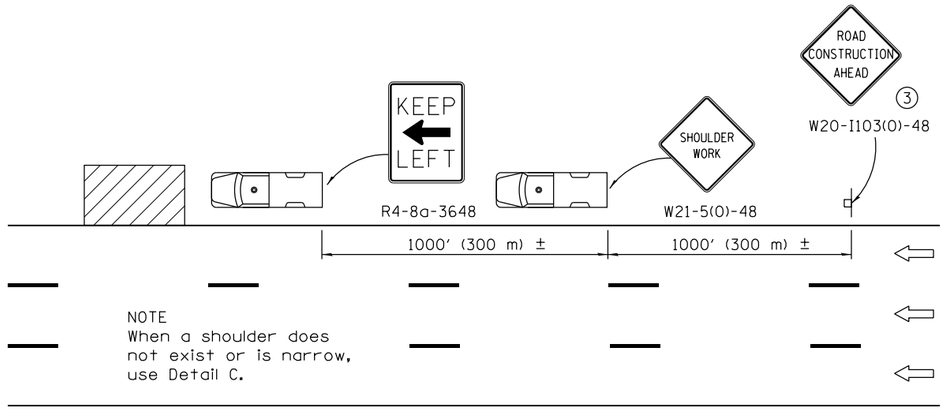


## DETAIL A

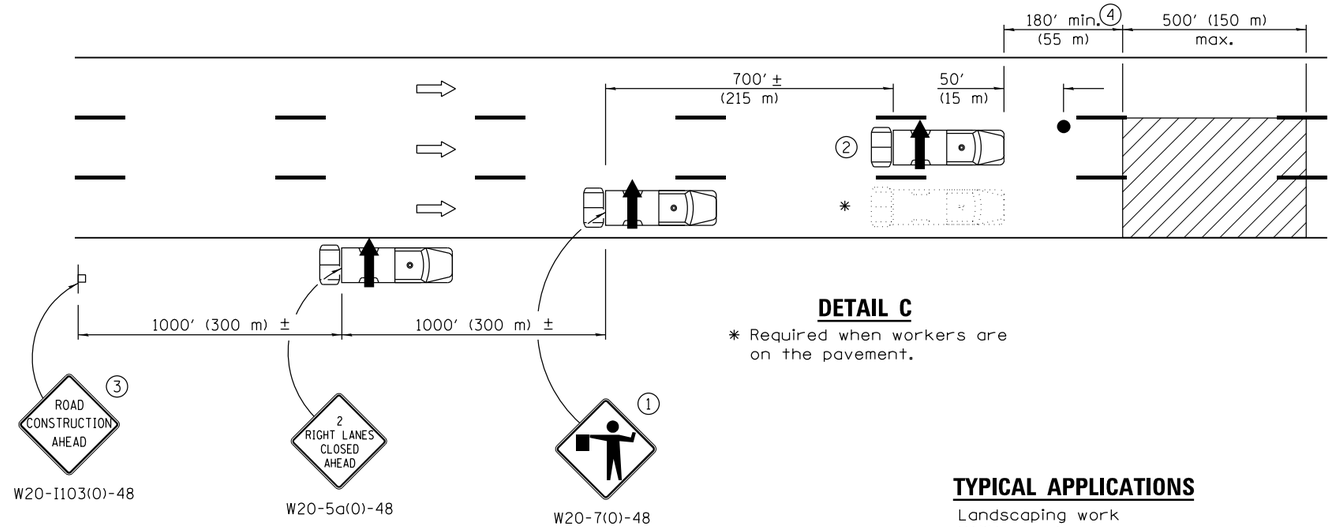


## DETAIL C

* Required when workers are on the pavement.

## TYPICAL APPLICATIONS

Landscaping work
Utility work
Pavement marking
Weed spraying
Roadometer measurements
Debris cleanup
Crack pouring

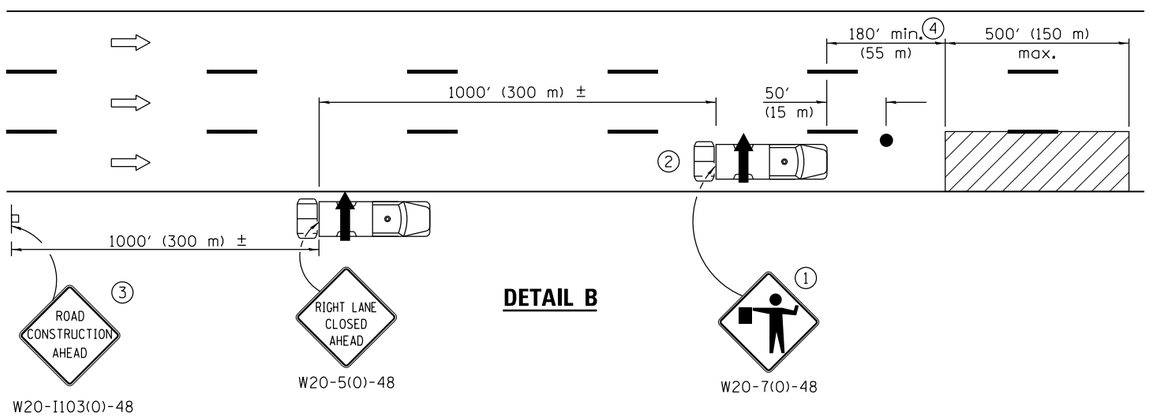


## DETAIL B

1. Flaggers are required when workers are on the pavement.
2. For striping operations only. See sign arrow detail on this standard.
3. For stationary operations which are on the roadway or shoulder, greater than 15 minutes and up to 1 hour.
4. The distance between the work and the lead truck may vary according to terrain or paint/crack sealing drying time.

G20-I101-2430
(appropriate arrow)
2 (when striping only)

## GENERAL NOTES

This Standard is used where any vehicle, equipment, workers or their activities will require: 1) stationary operations up to 1 hour, or 2) a continuous or intermittent moving operation where the average speed of movement is greater than 1 mph (2 km/h).

This Standard is also applicable when work is being performed in the left lane(s) or on the median shoulder. Under these conditions, KEEP RIGHT signs shall be substituted for KEEP LEFT signs and arrow board indications shall be directed to the right.

All dimensions are in inches (millimeter) unless otherwise shown.

## SYMBOLS

- Arrow board
- Work area
- Truck with flashing amber light
- Truck/Trailer mounted attenuator
- Flagger with traffic control sign
- Sign

Illinois Department of Transportation

APPROVED April 1, 2016
ENGINEER OF SAFETY ENGINEERING

APPROVED April 1, 2016
ENGINEER OF DESIGN AND ENVIRONMENT

ISSUED 1-1-97

| DATE | REVISIONS |
|---|---|
| 4-1-16 | Added trailer option for |
| | attenuator symbol. Added |
| | note 4. Revised gen. notes. |
| 1-1-15 | Added general note |
| | regarding vehicle spacing. |
| | Corr. KEEP LEFT sign no. |

# LANE CLOSURE, MULTILANE, INTERMITTENT OR MOVING OPER., FOR SPEEDS ≥ 45 MPH

**STANDARD 701426–08**

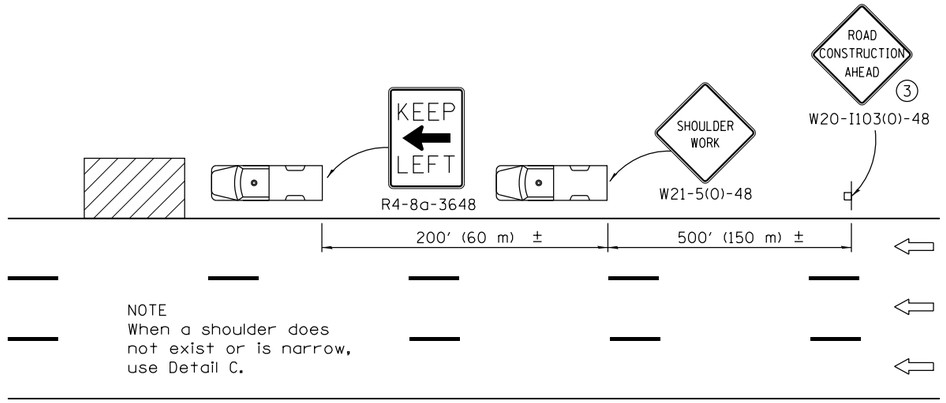


## DETAIL A

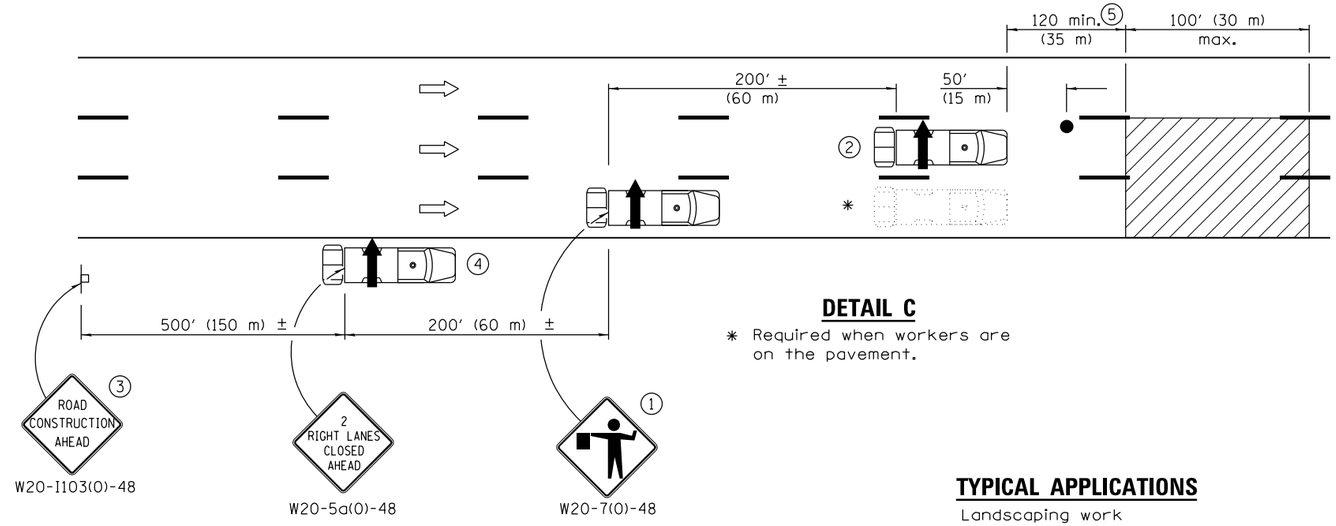


## DETAIL C

* Required when workers are on the pavement.

## TYPICAL APPLICATIONS

Landscaping work
Utility work
Pavement marking
Weed spraying
Roadometer measurements
Debris cleanup
Crack pouring

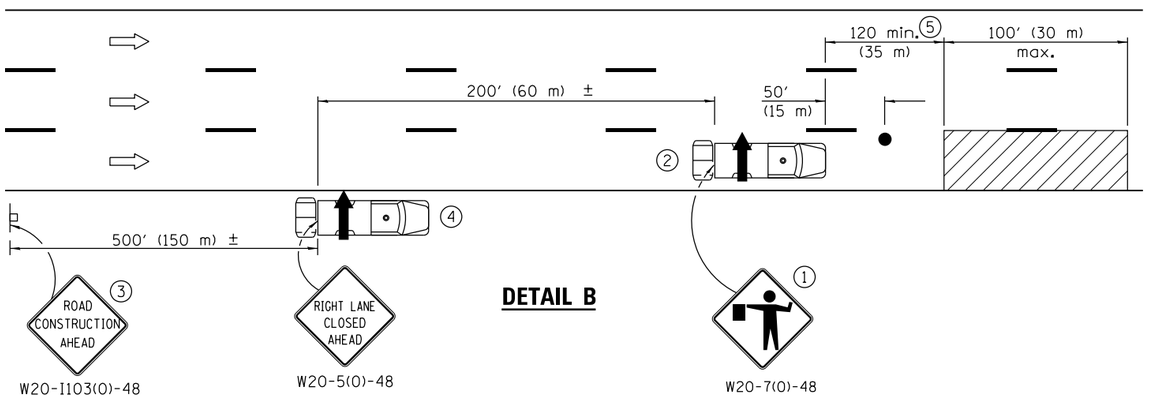


## DETAIL B

1. Flaggers are required when workers are on the pavement.
2. For striping operations only. See sign arrow detail on this standard.
3. For stationary operations which are on the roadway or shoulder, greater than 15 minutes and up to 1 hour.
4. Omit truck, attenuator and arrow board when no shoulder exists due to curb and gutter.
5. The distance between the work and the lead truck may vary according to terrain or paint/crack sealing time.

G20-I101-2430
(appropriate arrow)
2 (when striping only)

## GENERAL NOTES

This Standard is used where any vehicle, equipment, workers or their activities will require: 1) stationary operations up to 1 hour, or 2) a continuous or intermittent moving operation where the average speed of movement is greater than 1 mph (2 km/h).

This Standard is also applicable when work is being performed in the left lane(s) or on the median shoulder. Under these conditions, KEEP RIGHT signs shall be substituted for KEEP LEFT signs and arrow board indications shall be directed to the right.

All dimensions are in inches (millimeter) unless otherwise shown.

## SYMBOLS

- Arrow board
- Work area
- Truck with flashing amber light
- Truck/Trailer mounted attenuator
- Flagger with traffic control sign
- Sign

Illinois Department of Transportation

APPROVED April 1, 2016
ENGINEER OF SAFETY ENGINEERING

APPROVED April 1, 2016
ENGINEER OF DESIGN AND ENVIRONMENT

ISSUED 1-1-11

| DATE | REVISIONS |
|---|---|
| 4-1-16 | Rev. gen. notes. Added |
| | note 5. Rev. dist. between |
| | work and lead truck. |
| 1-1-15 | Added general note |
| | regarding vehicle spacing. |
| | Corr. KEEP LEFT sign no. |

# LANE CLOSURE, MULTILANE, INTERMITTENT OR MOVING OPER., FOR SPEEDS ≤ 40 MPH

**STANDARD 701427–04**

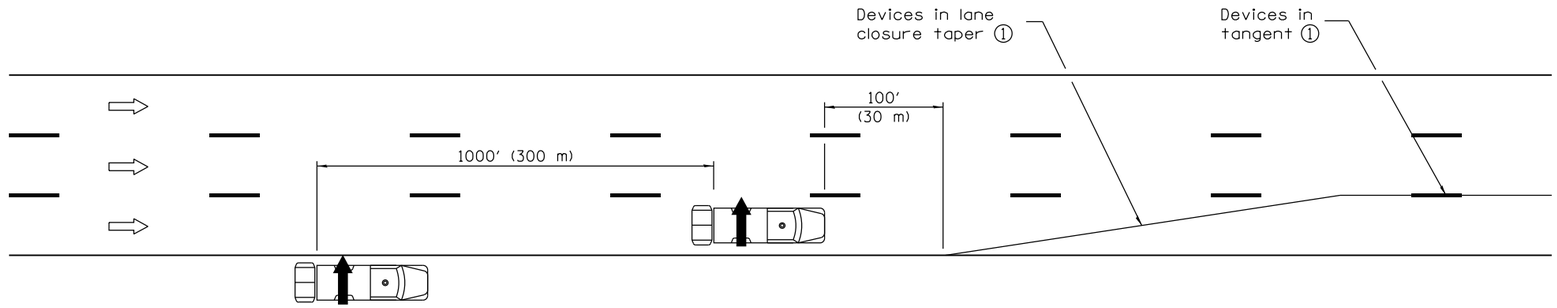


① See plans or appropriate Standard for delineating devices, spacing and length of taper/tangent.

## CASE I

CASE I depicts the setup of delineating devices for a single outside lane closure.

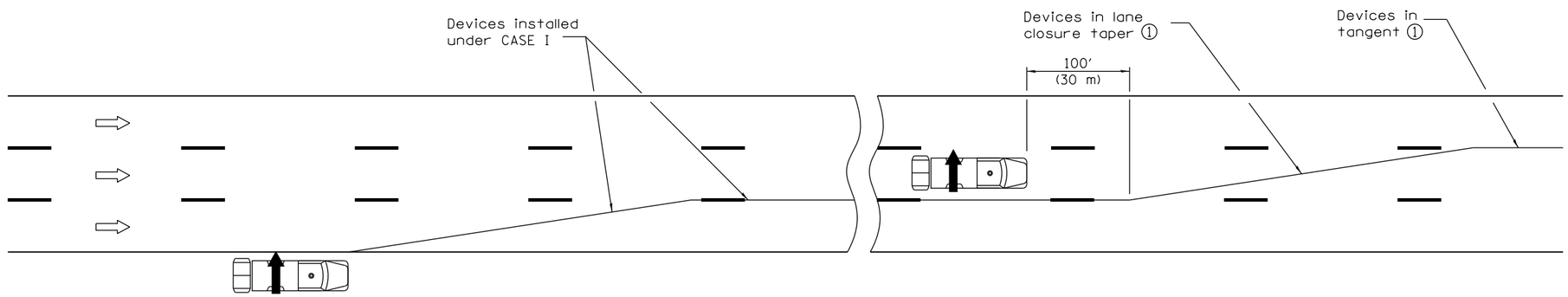


## CASE II

CASE II depicts the setup of delineating devices for a two lane closure. The single lane closure device setup as depicted in CASE I shall be performed prior to the setup for the second lane closure.

## SYMBOLS

Arrow board

Truck with flashing amber light

Truck/Trailer mounted attenuator

## GENERAL NOTES

This Standard is used for setup and removal of lane closures on freeways/expressways having ADT greater than 25,000.

Trucks with arrow boards and truck-mounted-attenuators shall be in place as shown for the setup and removal of the lane closure taper(s) and the first 100′ (30 m) of channelizing devices in the tangent(s).

This Standard is also applicable when work is being performed in the left lane(s) or on the median shoulder. Under these conditions arrow board indications shall be directed to the right.

All dimensions are in inches (millimeter) unless otherwise shown.

Illinois Department of Transportation

APPROVED April 1, 2016
ENGINEER OF SAFETY ENGINEERING

APPROVED April 1, 2016
ENGINEER OF DESIGN AND ENVIRONMENT

ISSUED 1-1-97

| DATE | REVISIONS |
|---|---|
| 4-1-16 | Added trailer option for attenuator symbol. |
| 1-1-14 | New Standard. |

# TRAFFIC CONTROL SETUP AND REMOVAL FREEWAY/EXPRESSWAY

STANDARD 701428–01

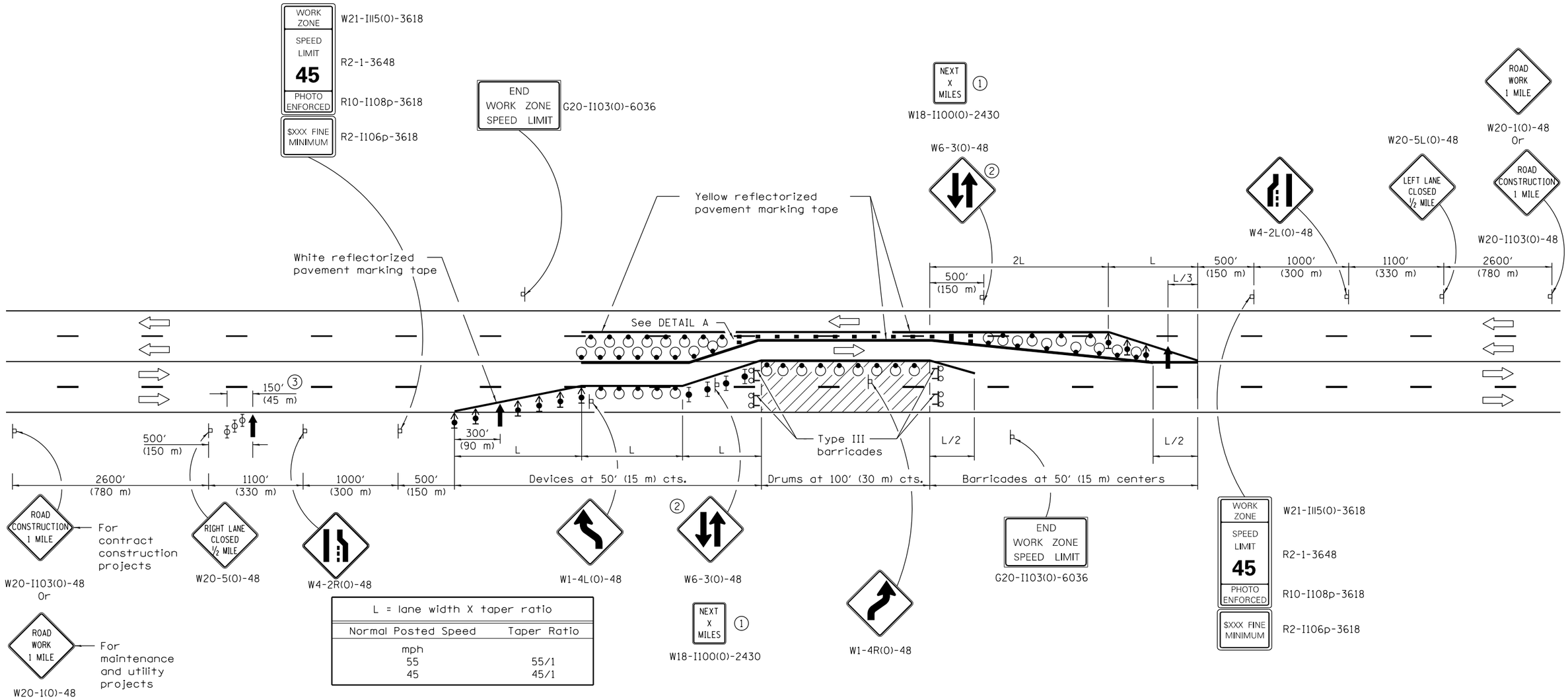


| L = lane width X taper ratio | |
|---|---|
| Normal Posted Speed | Taper Ratio |
| mph | |
| 55 | 55/1 |
| 45 | 45/1 |

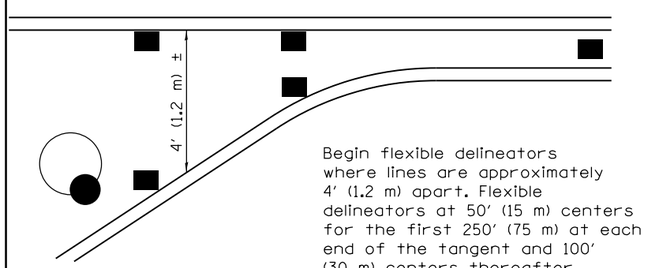


Begin flexible delineators where lines are approximately 4′ (1.2 m) apart. Flexible delineators at 50′ (15 m) centers for the first 250′ (75 m) at each end of the tangent and 100′ (30 m) centers thereafter.

## DETAIL A

## SYMBOLS

- Arrow board
- Work area
- Sign
- Drum with steady burn monodirectional light
- Direction indicator barricade with steady burn monodirectional light
- Type II barricade with steady burn monodirectional light
- Type II barricade, drum or vertical barricade with monodirectional flashing light
- Flexible delineator
- Type III barricade with flashing monodirectional lights

(1) Shall be repeated every 1 mile (1.6 km).

(2) Shall be repeated every 1 mile (1.6 km) in each direction in the tangent section unless concrete barrier is used.

(3) Three Type II barricades, drums or vertical barricades at 50′ (15 m) centers.

## GENERAL NOTES

This Standard is used where at any time, any vehicle, equipment, workers or their activities require the closure of two adjacent lanes and a temporary crossover is provided by making use of one lane of pavement normally used by opposing flow of traffic and flexible delineators are used to separate the opposing traffic.

Cones may be substituted for flexible delineators during daytime operations at half the spacing.

All dimensions are in inches (millimeters) unless otherwise shown.

Illinois Department of Transportation

APPROVED April 1, 2016
ENGINEER OF SAFETY ENGINEERING

APPROVED April 1, 2016
ENGINEER OF DESIGN AND ENVIRONMENT

ISSUED 1-1-97

| DATE | REVISIONS |
|---|---|
| 4-1-16 | Changed drum spacing in |
| | work area to 100′ (30 m) |
| | centers only. |
| 1-1-15 | Revised END WORK ZONE SPEED |
| | LIMIT sign dimensions. |
| | |

# LANE CLOSURE, MULTILANE, UNDIV. WITH CROSSOVER, FOR SPEEDS ≥ 45 MPH TO 55 MPH

**STANDARD 701431–11**

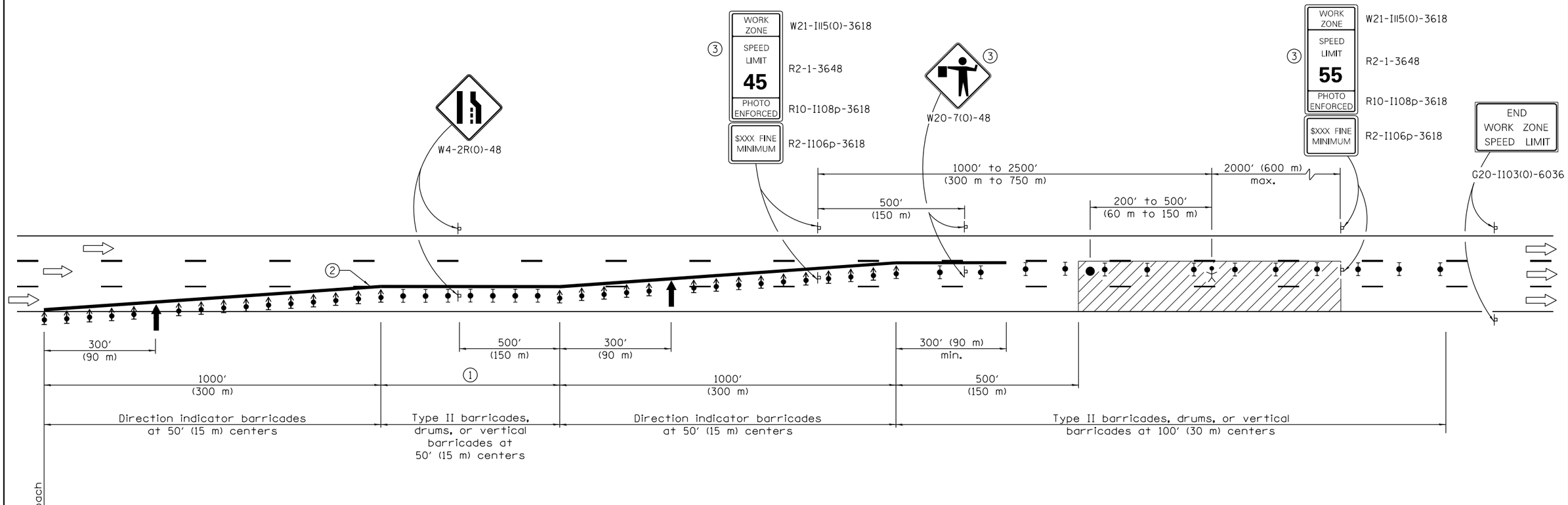


## SYMBOLS

- Arrow board
- Work area
- Worker
- Sign
- Direction indicator barricade with steady burn monodirectional light
- Type II barricade, drum, or vertical barricade with steady burn monodirectional light
- Flagger with traffic control sign

(1) The length of the tangent section shall be:

| Duration of Closure | Length of Tangent Section |
|---|---|
| < 14 Days | 1000′ (300 m) |
| ≥ 14 Days | 2000′ (600 m) |

(2) Reflectorized temporary pavement marking tape shall be placed throughout the tapers and for 300′ (90 m) along-side the work area when the closure time is greater than fourteen days. The edge line shall be white for right lane closures and yellow for left lane closures.

(3) Work zone speed limits signs and FLAGGER signs shall be moved as necessary to maintain the required spacing between the signs and the workers in each separate work activity. Work Zone Speed Limit 55 Photo Enforced sign shall be omitted when the work area dictates that placement of the sign array within 500′ (150 m) of the End Work Zone Speed Limit sign.

## GENERAL NOTES

This Standard is used where at any time any vehicle, equipment, workers or their activities will encroach on two lanes of a freeway/expressway.

This Standard must always be used in combination with Standard 701400.

This Standard also applies when work is being performed in the left lanes. Under these conditions, the set up would be a mirror image to what is shown.

Check barricades shall be placed in the middle of the closed lanes at 1000′ (300 m) centers.

All dimensions are in inches (millimeters) unless otherwise shown.

Illinois Department of Transportation

APPROVED April 1, 2016
ENGINEER OF SAFETY ENGINEERING

APPROVED April 1, 2016
ENGINEER OF DESIGN AND ENVIRONMENT

ISSUED 1-1-05

| DATE | REVISIONS |
|---|---|
| 4-1-16 | Revised note (1) to always |
| | require tangent. Added |
| | dimension to lane drop sign. |
| 1-1-15 | Revised END WORK ZONE SPEED |
| | LIMIT sign dimensions. |

# TWO LANE CLOSURE, FREEWAY / EXPRESSWAY

## STANDARD 701446–07

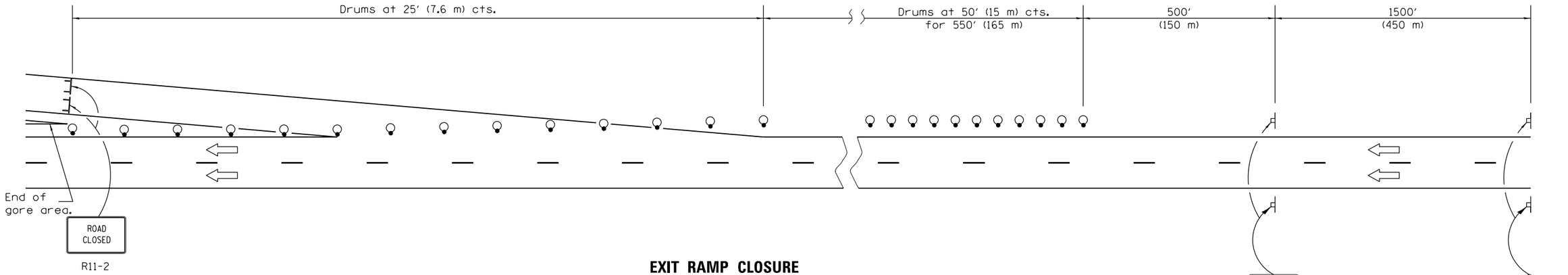


## EXIT RAMP CLOSURE

① Omit this sign when median is less than 10′ (3 m).

② See sign spacing table.

③ Drums for entrance ramp closure shall be omitted if turn lanes are not present.

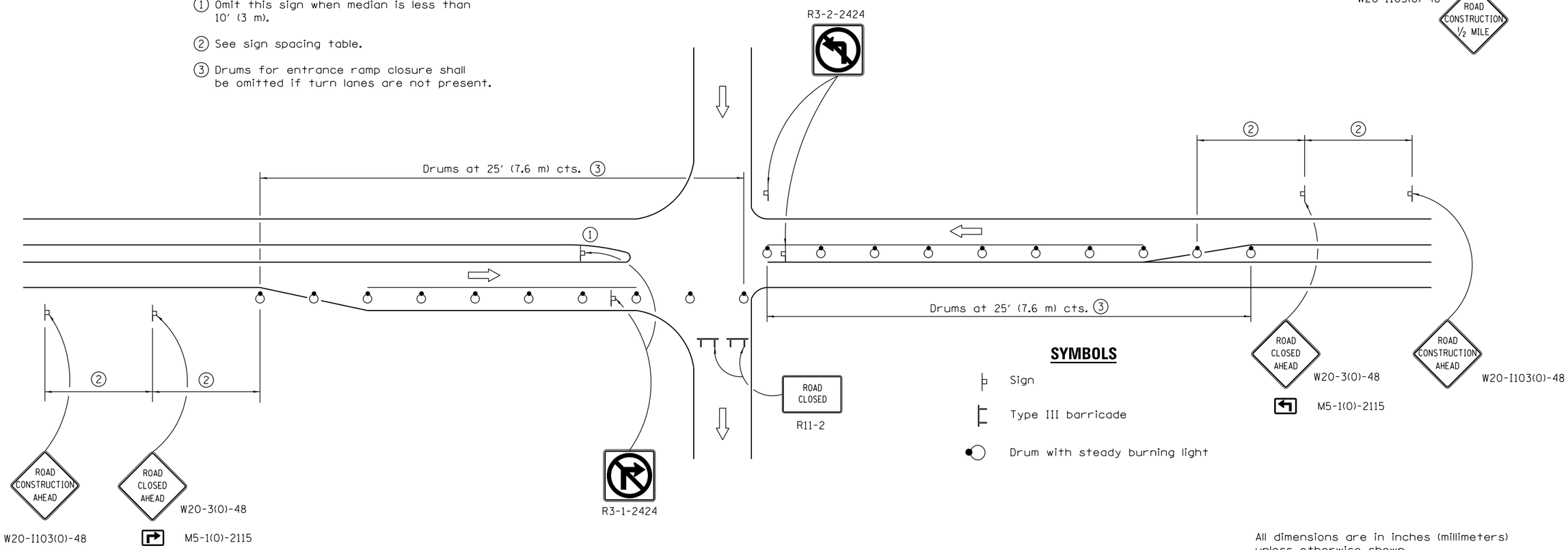


## ENTRANCE RAMP CLOSURE

| SIGN SPACING | |
|---|---|
| Posted Speed | Sign Spacing |
| 55 | 500′ (150 m) |
| 50-45 | 350′ (100 m) |
| <45 | 200′ (60 m) |

All dimensions are in inches (millimeters) unless otherwise shown.

Illinois Department of Transportation

APPROVED January 1, 2015
ENGINEER OF SAFETY ENGINEERING

APPROVED January 1, 2015
ENGINEER OF DESIGN AND ENVIRONMENT

ISSUED 1-1-09

| DATE | REVISIONS |
|---|---|
| 1-1-15 | Modified EXIT CLOSED sign |
| | number. |
| | |
| 1-1-14 | Revised 'ENTRANCE RAMP |
| | CLOSURE'. Changed sign |
| | spacing on exit closure. |

# RAMP CLOSURE FREEWAY/EXPRESSWAY

**STANDARD 701451–03**

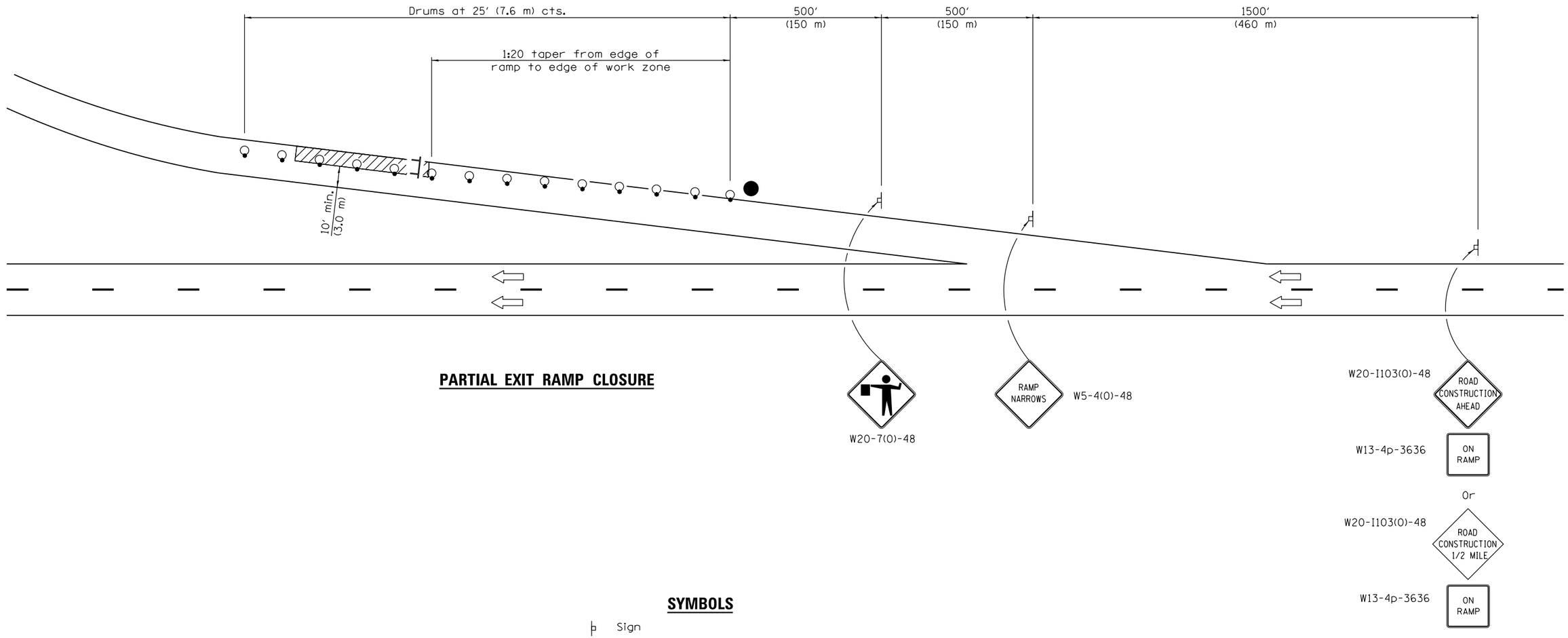


## PARTIAL EXIT RAMP CLOSURE

## SYMBOLS

- Sign
- Type III barricade
- Drum with steady burning light
- Work area
- Flagger with traffic control sign

All dimensions are in inches (millimeters) unless otherwise shown.

Illinois Department of Transportation

APPROVED January 1, 2014
ENGINEER OF SAFETY ENGINEERING

APPROVED January 1, 2012
ENGINEER OF DESIGN AND ENVIRONMENT

ISSUED 1-1-09

| DATE | REVISIONS |
|---|---|
| 1-1-14 | ON RAMP sign now 36x36. |
| | Del. G20-2 & W13-1 signs. |
| | Added dim. at work area. |
| 1-1-12 | Changed 'Work zone' to |
| | 'Work area' in symbol |
| | legend. |

# PARTIAL EXIT RAMP CLOSURE FREEWAY /EXPRESSWAY

## STANDARD 701456–03

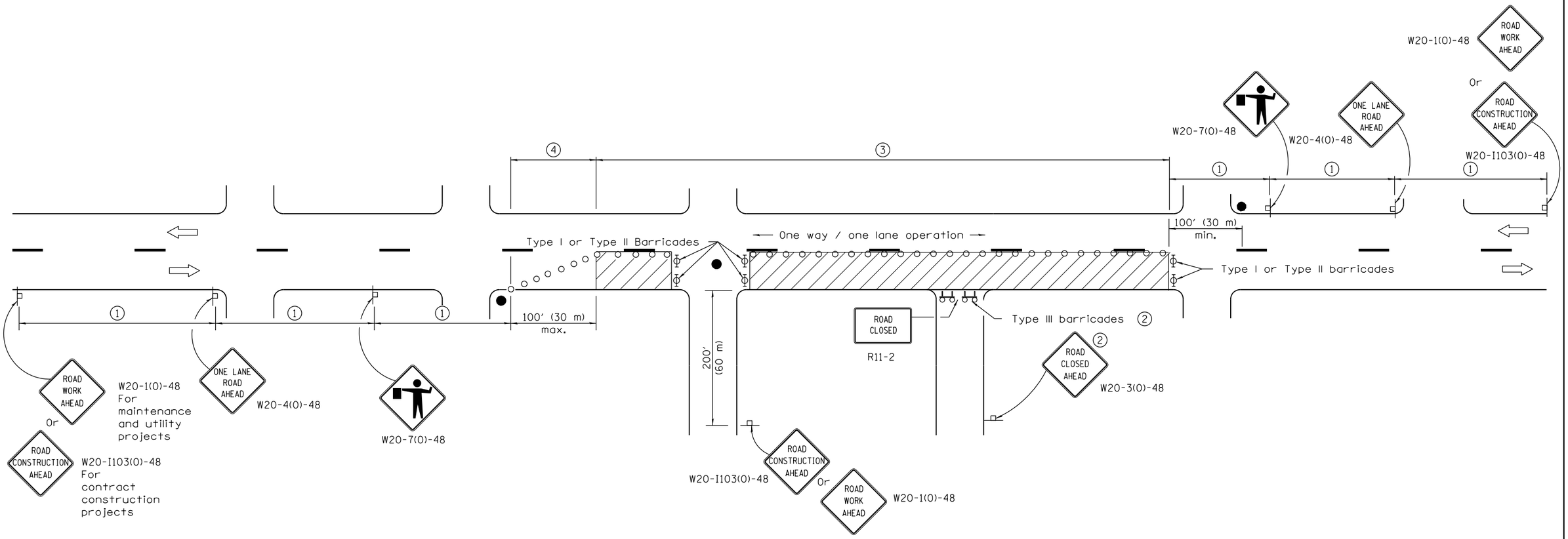


| SIGN SPACING | |
|---|---|
| Posted Speed | Sign Spacing |
| 55 | 500′ (150 m) |
| 50-45 | 350′ (100 m) |
| <45 | 200′ (60 m) |

## SYMBOLS

- Work area
- Cone, drum or barricade (not required for moving operations)
- Sign on portable or permanent support
- Flagger with traffic control sign
- Barricade or drum with flashing light
- Type III barricade with flashing lights

1. Refer to SIGN SPACING TABLE for distances.
2. For approved sideroad closures.
3. Cones at 25′ (8 m) centers for 250′ (75 m). Additional cones may be placed at 50′ (15 m) centers. When drums or Type I or Type II barricades are used. the interval between devices may be doubled.
4. Cones, drums or barricades at 20′ (6 m) centers.

## GENERAL NOTES

This Standard is used where at any time, day or night, any vehicle, equipment, workers or their activities
encroach on the pavement requiring the closure of one traffic lane in an urban area.

All dimensions are in inches (millimeters) unless otherwise shown.

Illinois Department of Transportation

APPROVED January 1, 2011
ENGINEER OF SAFETY ENGINEERING
APPROVED January 1, 2011
ENGINEER OF DESIGN AND ENVIRONMENT

ISSUED 1-1-97

| DATE | REVISIONS |
|---|---|
| 1-1-11 | Revised flagger sign. |
| | |
| | |
| 1-1-09 | Switched units to |
| | English (metric). |
| | Corrected sign No.'s. |

# URBAN LANE CLOSURE, 2L, 2W, UNDIVIDED

**STANDARD 701501–06**

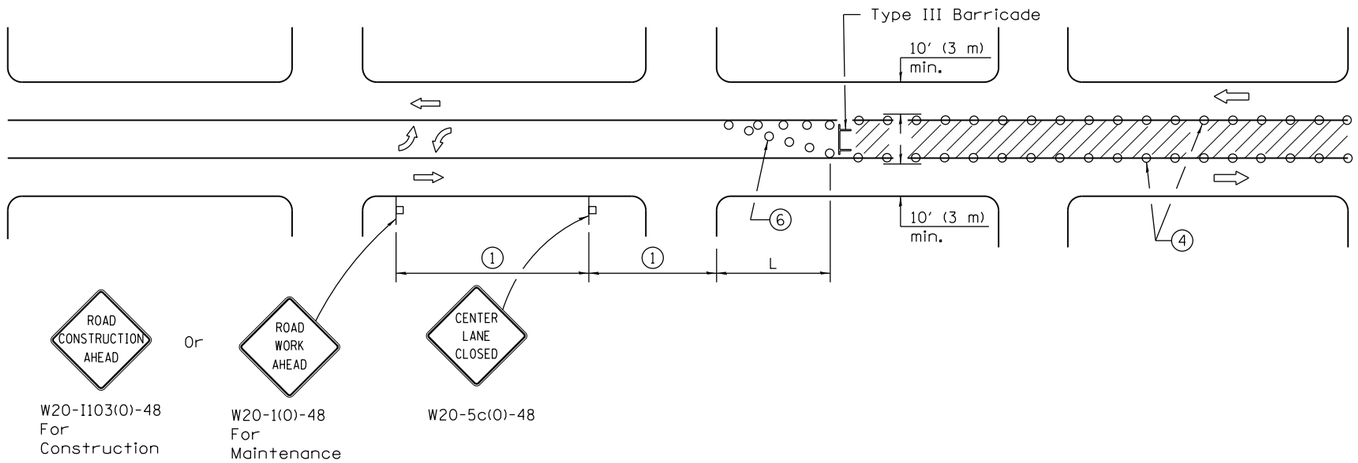


## CASE I

(Signs required for both directions)

| SIGN SPACING | |
|---|---|
| Posted Speed | Sign Spacing |
| 55 | 500′ (150 m) |
| 50-45 | 350′ (100 m) |
| <45 | 200′ (60 m) |

## SYMBOLS

- Work area
- Barricade or drum with flashing light
- Flagger with traffic control sign
- Cone, drum or barricade (Cones for daytime use only)
- Sign on portable or permanent support

1. Refer to SIGN SPACING TABLE for distances.
2. Required for speeds > 40 mph (70 km/h).
3. Required if work exceeds 500′ (164 m) or 1 block.
4. Cones at 25′ (8 m) centers for 250′ (75 m). Additional cones may be placed at 15 m (50′) centers. When drums or type I or II barricades are used, the interval between devices may be doubled.
5. For approved sideroad closures.
6. Cones, drums or barricades at 20′ (6 m) centers in taper.
7. Use flagger sign only when flagger is present.

## GENERAL NOTES

This Standard is used to close one lane of an urban, two lane, two way roadway with a bidirectional turn lane.

Case I applies when no workers are present. When workers are present, two lanes shall be closed and traffic control shall be according to Standard 701501.

Calculate L as follows:

| SPEED LIMIT | FORMULAS English | FORMULAS (Metric) |
|---|---|---|
| 40 mph (70 km/h) or less: | $L = \frac{WS^2}{60}$ | $L = \frac{WS^2}{150}$ |
| 45 mph (80 km/h) or greater: | L=(W)(S) | L=0.65(W)(S) |

W = Width of offset in feet (meters).

S = Normal posted speed mph (km/h).

All dimensions are in inches (millimeters) unless otherwise shown.

Illinois Department of Transportation

APPROVED January 1, 2014
ENGINEER OF SAFETY ENGINEERING
APPROVED January 1, 2014
ENGINEER OF DESIGN AND ENVIRONMENT

ISSUED 1-1-01

| DATE | REVISIONS |
|---|---|
| 1-1-14 | Omitted original note 4. |
| | Rev. workers sign no. to |
| | agree with current MUTCD. |
| 1-1-13 | Omitted text 'WORKERS' |
| | sign. |
| | |

# URBAN LANE CLOSURE, 2L, 2W, WITH BIDIRECTIONAL LEFT TURN LANE

(Sheet 1 of 2)

**STANDARD 701502–06**

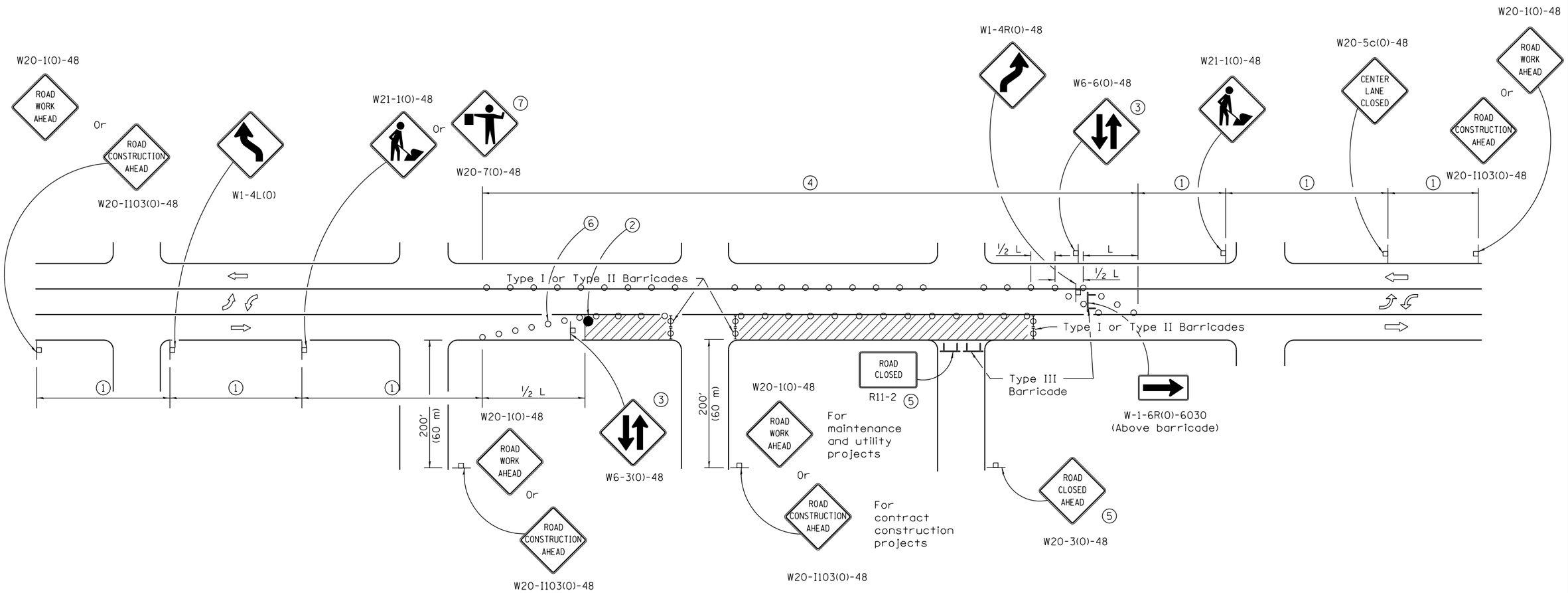


**CASE II**

Illinois Department of Transportation

APPROVED January 1, 2014
ENGINEER OF SAFETY ENGINEERING

APPROVED January 1, 2014
ENGINEER OF DESIGN AND ENVIRONMENT

ISSUED 1-1-10

# URBAN LANE CLOSURE, 2L, 2W, WITH BIDIRECTIONAL LEFT TURN LANE

(Sheet 2 of 2)

**STANDARD 701502–06**

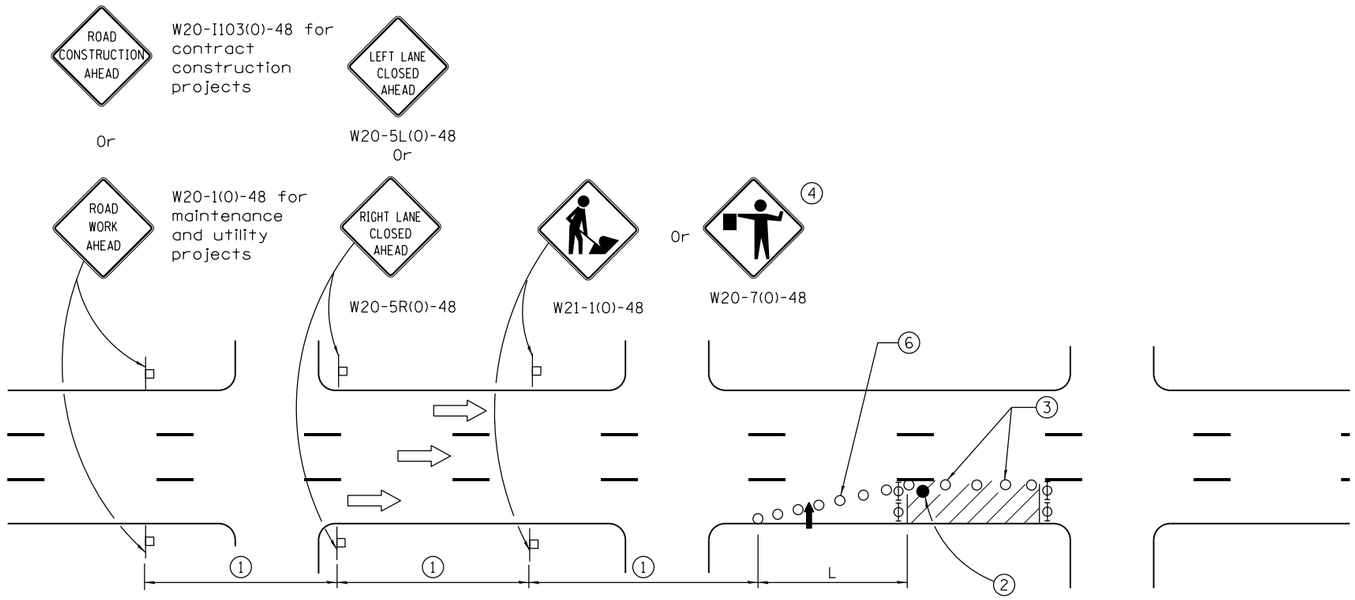


| SIGN SPACING | |
|---|---|
| Posted Speed | Sign Spacing |
| 55 | 500′ (150 m) |
| 50-45 | 350′ (100 m) |
| <45 | 200′ (60 m) |

## SYMBOLS

- Arrow board
- Cone, drum or barricade
- Sign on portable or permanent support
- Work area
- Barricade or drum with flashing light
- Type III barricade with flashing lights
- Flagger with traffic control sign.

1. Refer to SIGN SPACING TABLE for distances.
2. Required for speeds > 40 MPH
3. Cones at 25′ (8 m) centers for 250′ (75 m). Additional cones may be placed at 50′ (15 m) centers. When drums or Type I or Type II barricades are used, the interval between devices may be doubled.
4. Use flagger sign only when flagger is present.
5. For approved sideroad closures.
6. Cones, drums or barricades at 20′ (6 m) in taper.

## GENERAL NOTES

This Standard is used where at any time, day or night, any vehicle, equipment, workers or their activities encroach on the pavement during shoulder operations or where construction requires lane closures in urban areas.

Calculate L as follows:

| SPEED LIMIT | FORMULAS English | FORMULAS (Metric) |
|---|---|---|
| 40 mph (70 km/h) or less: | $L = \frac{WS^2}{60}$ | $L = \frac{WS^2}{150}$ |
| 45 mph (80 km/h) or greater: | L=(W)(S) | L=0.65(W)(S) |

W = Width of offset in feet (meters).

S = Normal posted speed mph (km/h).

All dimensions are in inches (millimeters) unless otherwise shown.

Illinois Department of Transportation

APPROVED January 1, 2014
ENGINEER OF SAFETY ENGINEERING

APPROVED January 1, 2014
ENGINEER OF DESIGN AND ENVIRONMENT

ISSUED 1-1-97

| DATE | REVISIONS |
|---|---|
| 1-1-14 | Revised workers sign |
| | number to agree with |
| | current MUTCD. |
| 1-1-13 | Omitted text 'WORKERS' |
| | sign. |
| | |

# URBAN LANE CLOSURE, MULTILANE, 1W OR 2W WITH NONTRAVERSABLE MEDIAN

(Sheet 1 of 2)

STANDARD 701601–09

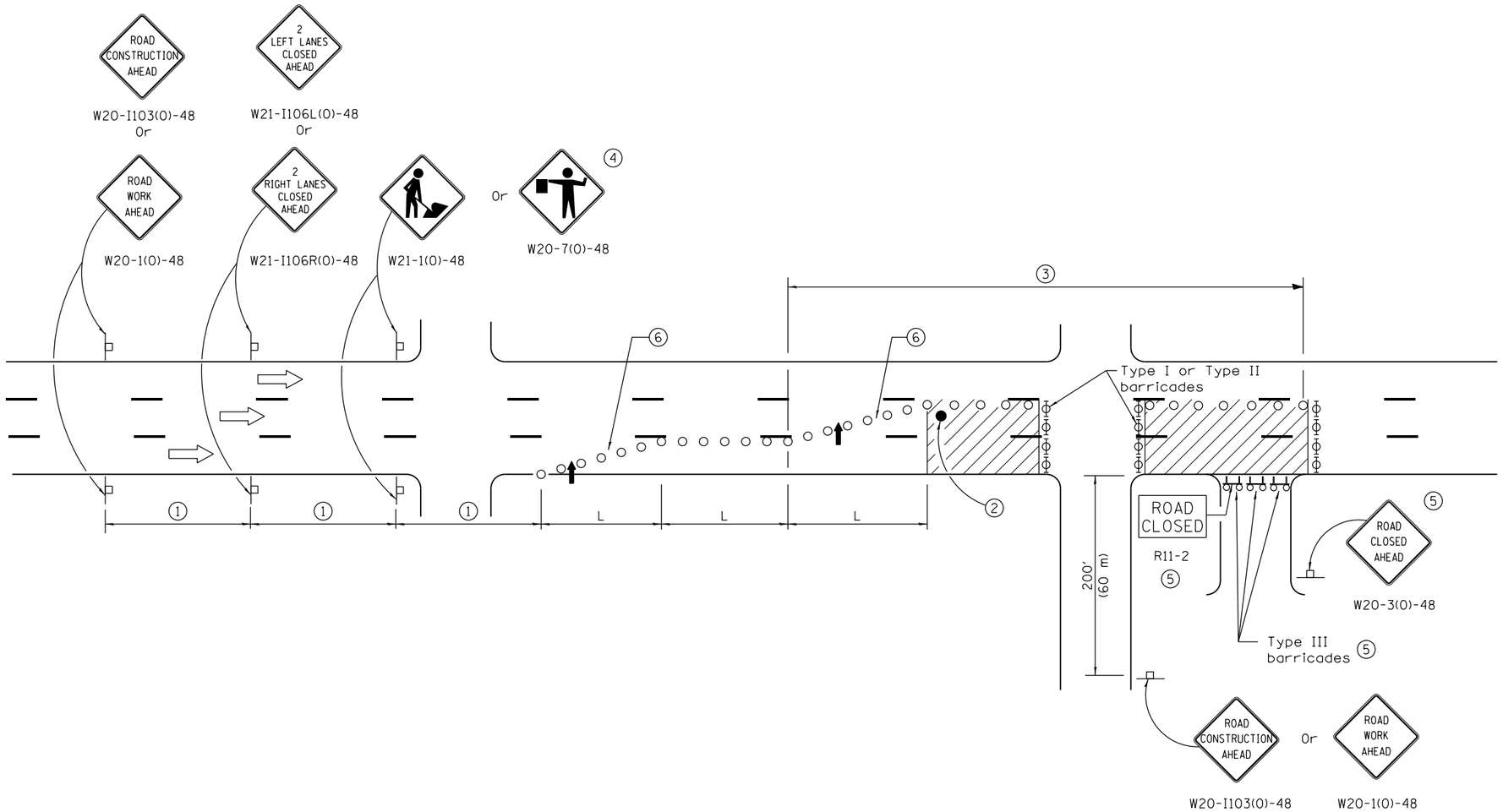


Illinois Department of Transportation

APPROVED January 1, 2014
ENGINEER OF SAFETY ENGINEERING

APPROVED January 1, 2014
ENGINEER OF DESIGN AND ENVIRONMENT

ISSUED 1-1-97

# URBAN LANE CLOSURE, MULTILANE, 1W OR 2W WITH NONTRAVERSABLE MEDIAN

(Sheet 2 of 2)

**STANDARD 701601–09**

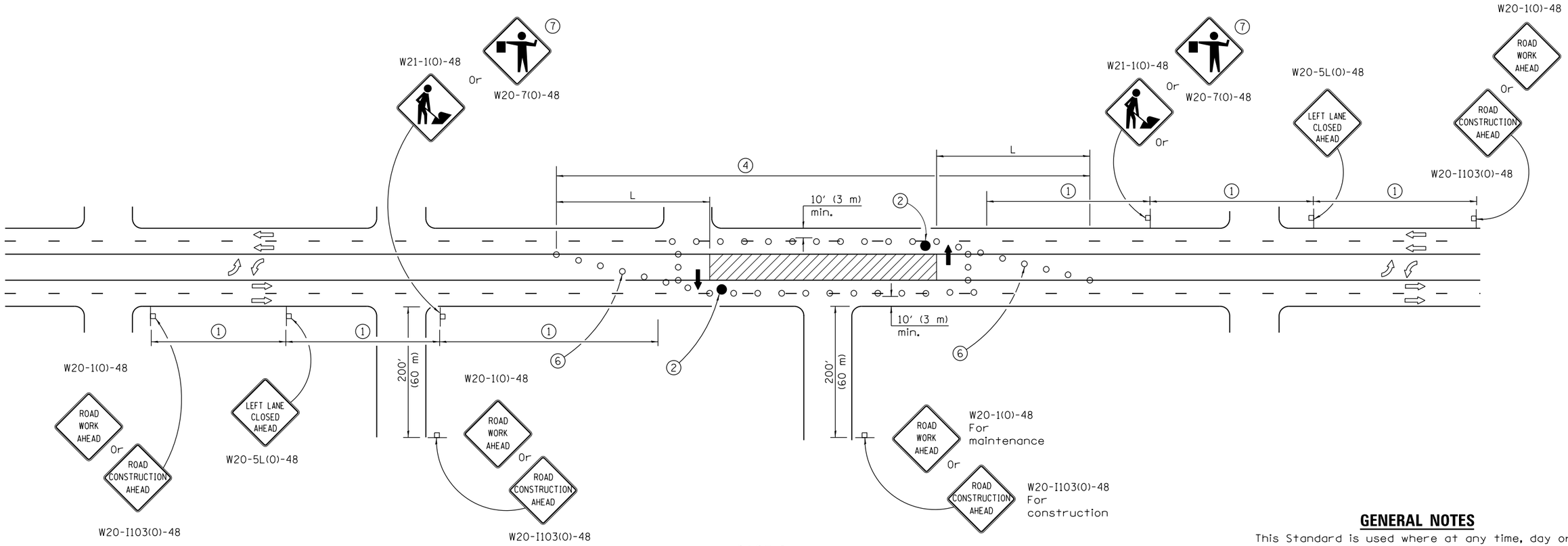


## CASE I

1. Refer to SIGN SPACING TABLE for distances.
2. Required for speeds > 40 mph (70 km/h).
3. Required if work exceeds 500' (164 m) or 1 block, repeat every 1 mile (1.6 km).
4. Cones at 25' (8 m) centers for 250' (75 m). Additional cones may be placed at 50' (15 m) centers. When drums or type I or II barricades are used, the interval between devices may be doubled.
5. For approved sideroad closures.
6. Cones, drums or barricades at 20' (6 m) centers in taper.
7. Use flagger sign only when flagger is present.

| SIGN SPACING | |
|---|---|
| Posted Speed | Sign Spacing |
| 55 | 500' (150 m) |
| 50-45 | 350' (100 m) |
| <45 | 200' (60 m) |

## SYMBOLS

- Arrow board
- Work area
- Barricade or drum with steady burning mondirectional light
- Flagger with traffic control sign
- Cone, drum or barricade (Cones for daytime use only)
- Sign on portable or permanent support
- Type III Barricade

## GENERAL NOTES

This Standard is used where at any time, day or night, any vehicle, equipment, workers or their activities encroach on the pavement requiring the closure of one traffic lane in an Urban area.

If the work operation is performed between 9:00 a.m. and 3:00 p.m. and does not exceed 15 min. Traffic protection shall be as shown for Standard 701426.

Calculate L as follows:

| SPEED LIMIT | FORMULAS English | FORMULAS (Metric) |
|---|---|---|
| 40 mph (70 km/h) or less: | $L = \frac{WS^2}{60}$ | $L = \frac{WS^2}{150}$ |
| 45 mph (80 km/h) or greater: | L=(W)(S) | L=0.65(W)(S) |

W = Width of offset in feet (meters).

S = Normal posted speed mph (km/h).

All dimensions are in inches (millimeters) unless otherwise shown.

Illinois Department of Transportation

APPROVED January 1, 2014
ENGINEER OF SAFETY ENGINEERING

APPROVED January 1, 2014
ENGINEER OF DESIGN AND ENVIRONMENT

ISSUED 1-1-10

| DATE | REVISIONS |
|---|---|
| 1-1-14 | Omitted original note 4. |
| | Rev. workers sign no. to |
| | agree with current MUTCD. |
| 1-1-13 | Omitted text 'WORKERS' |
| | sign. |
| | |

# URBAN LANE CLOSURE, MULTILANE, 2W WITH BIDIRECTIONAL LEFT TURN LANE

(Sheet 1 of 4)

**STANDARD 701602-07**

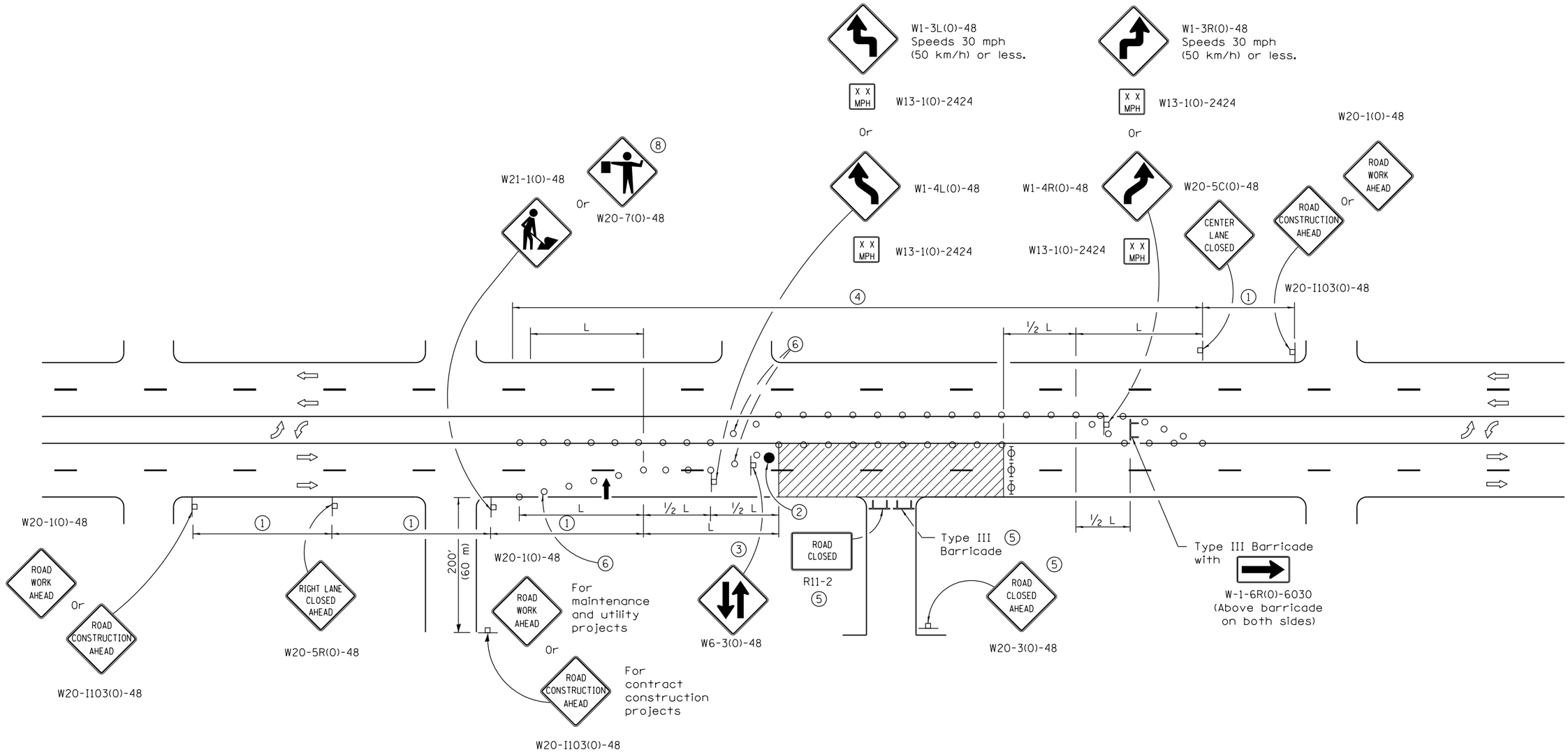


**CASE II**

Illinois Department of Transportation

APPROVED January 1, 2014
ENGINEER OF SAFETY ENGINEERING

APPROVED January 1, 2014
ENGINEER OF DESIGN AND ENVIRONMENT

ISSUED 1-1-01

# URBAN LANE CLOSURE, MULTILANE, 2W WITH BIDIRECTIONAL LEFT TURN LANE

(Sheet 2 of 4)

**STANDARD 701602–07**

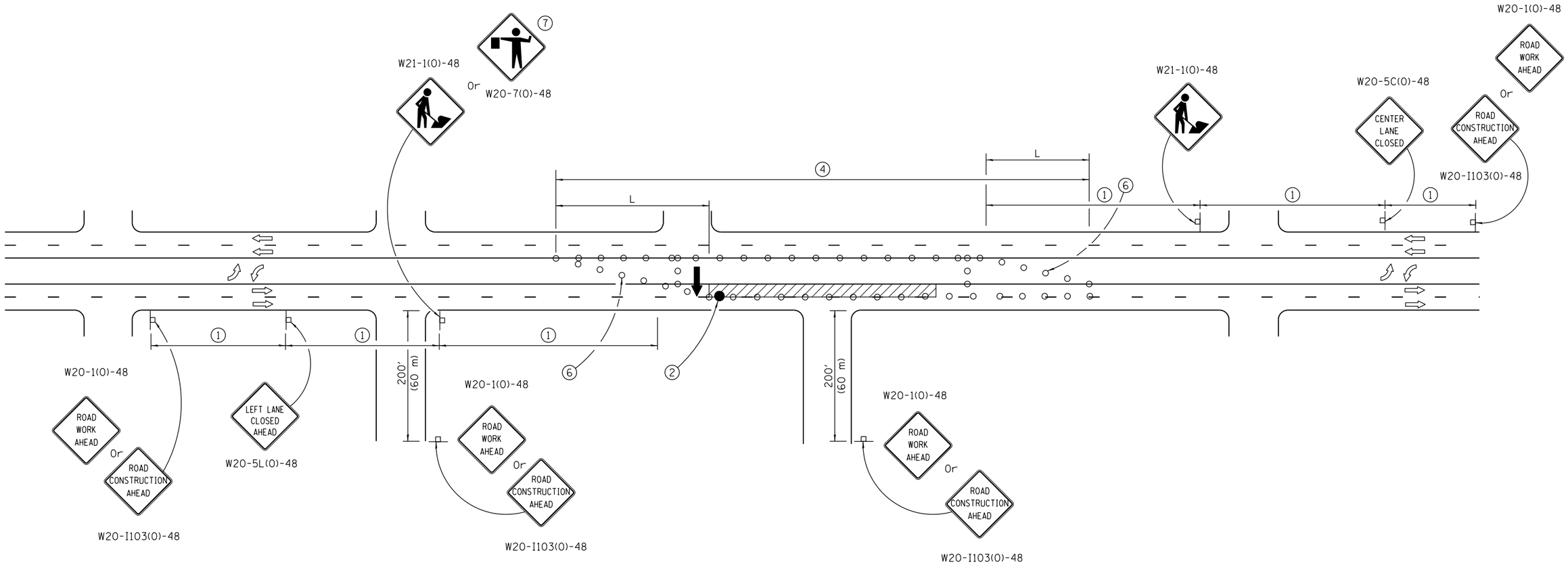


**CASE III**

Illinois Department of Transportation

APPROVED January 1, 2014
ENGINEER OF SAFETY ENGINEERING

APPROVED January 1, 2014
ENGINEER OF DESIGN AND ENVIRONMENT

ISSUED 1-1-01

# URBAN LANE CLOSURE, MULTILANE, 2W WITH BIDIRECTIONAL LEFT TURN LANE

(Sheet 3 of 4)

**STANDARD 701602–07**

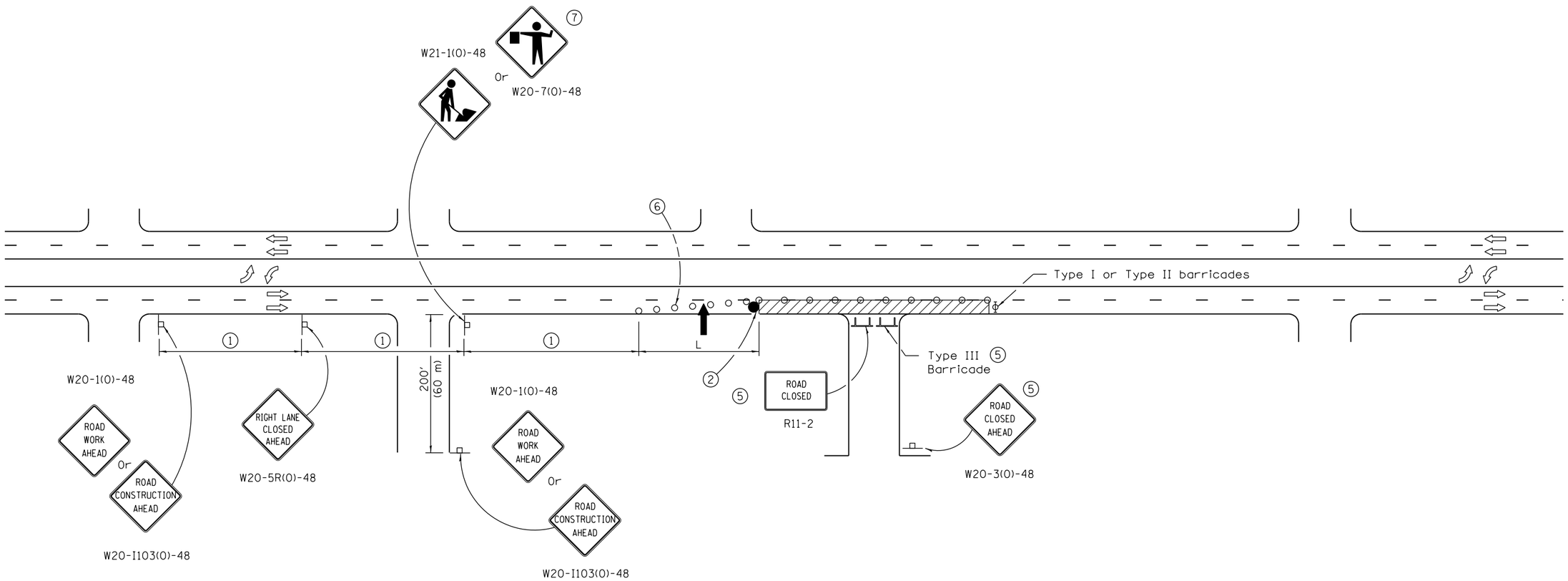


**CASE IV**

Illinois Department of Transportation

APPROVED January 1, 2014
ENGINEER OF SAFETY ENGINEERING

APPROVED January 1, 2014
ENGINEER OF DESIGN AND ENVIRONMENT

ISSUED 1-1-01

# URBAN LANE CLOSURE, MULTILANE, 2W WITH BIDIRECTIONAL LEFT TURN LANE

(Sheet 4 of 4)

**STANDARD 701602–07**

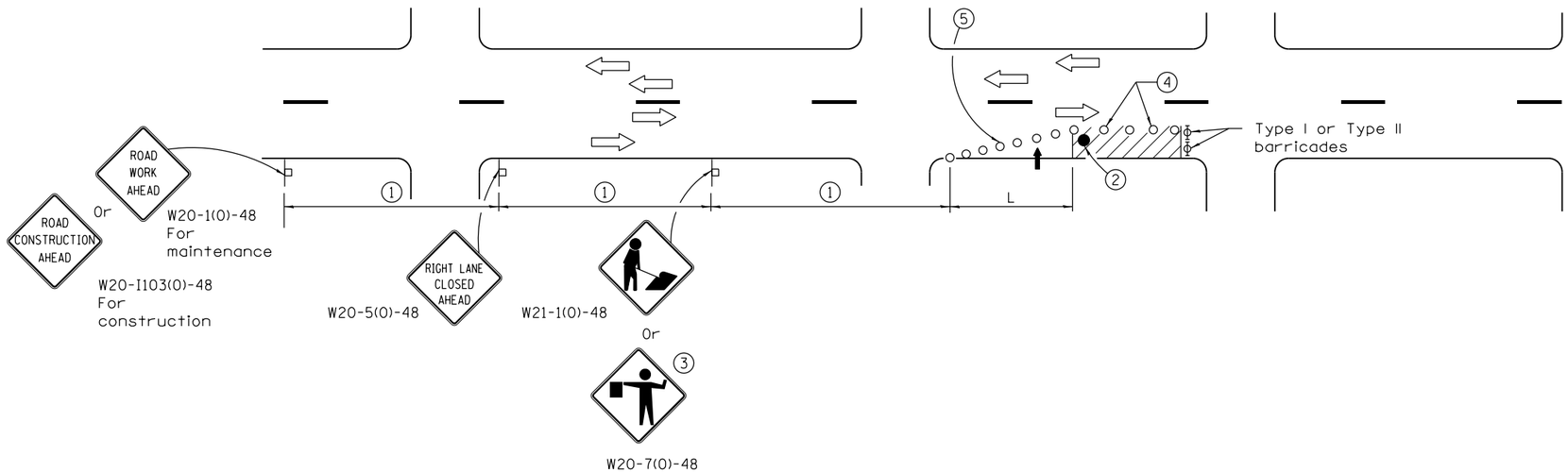


| SIGN SPACING | |
|---|---|
| Posted Speed | Sign Spacing |
| 55 | 500′ (150 m) |
| 50-45 | 350′ (100 m) |
| <45 | 200′ (60 m) |

## SYMBOLS

- Arrow board
- Cone, drum or barricade
- Sign on portable or permanent support
- Work area
- Barricade or drum with flashing light
- Flagger with traffic control sign.

1. Refer to SIGN SPACING TABLE for distances.
2. Required for speeds > 40 mph.
3. Use flagger sign only when flagger is present.
4. Cones at 25′ (8 m) centers for 250′ (75 m). Additional cones may be placed at 50′ (15 m) centers. When drums or Type I or Type II barricades are used, the interval between devices may be doubled.
5. Cones, drums or barricades at 20′ (6 m) centers in taper.

## GENERAL NOTES

This Standard is used where at any time, day or night, any vehicle, equipment, workers or their activities encroach on the pavement requiring the closure of one traffic lane in an Urban area.

Calculate L as follows:

| SPEED LIMIT | FORMULAS English | FORMULAS (Metric) |
|---|---|---|
| 40 mph (70 km/h) or less: | $L = \frac{WS^2}{60}$ | $L = \frac{WS^2}{150}$ |
| 45 mph (80 km/h) or greater: | L=(W)(S) | L=0.65(W)(S) |

W = Width of offset in feet (meters).

S = Normal posted speed mph (km/h).

All dimensions are in inches (millimeters) unless otherwise shown.

Illinois Department of Transportation

APPROVED January 1, 2015
ENGINEER OF SAFETY ENGINEERING

APPROVED January 1, 2015
ENGINEER OF DESIGN AND ENVIRONMENT

ISSUED 1-1-97

| DATE | REVISIONS |
|---|---|
| 1-1-15 | Renamed standard. Moved |
| | case on Sheet 2 to new |
| | Highway Standard. |
| 1-1-14 | Revised workers sign |
| | number to agree with |
| | current MUTCD. |

# URBAN SINGLE LANE CLOSURE, MULTILANE, 2W WITH MOUNTABLE MEDIAN

STANDARD 701606–10

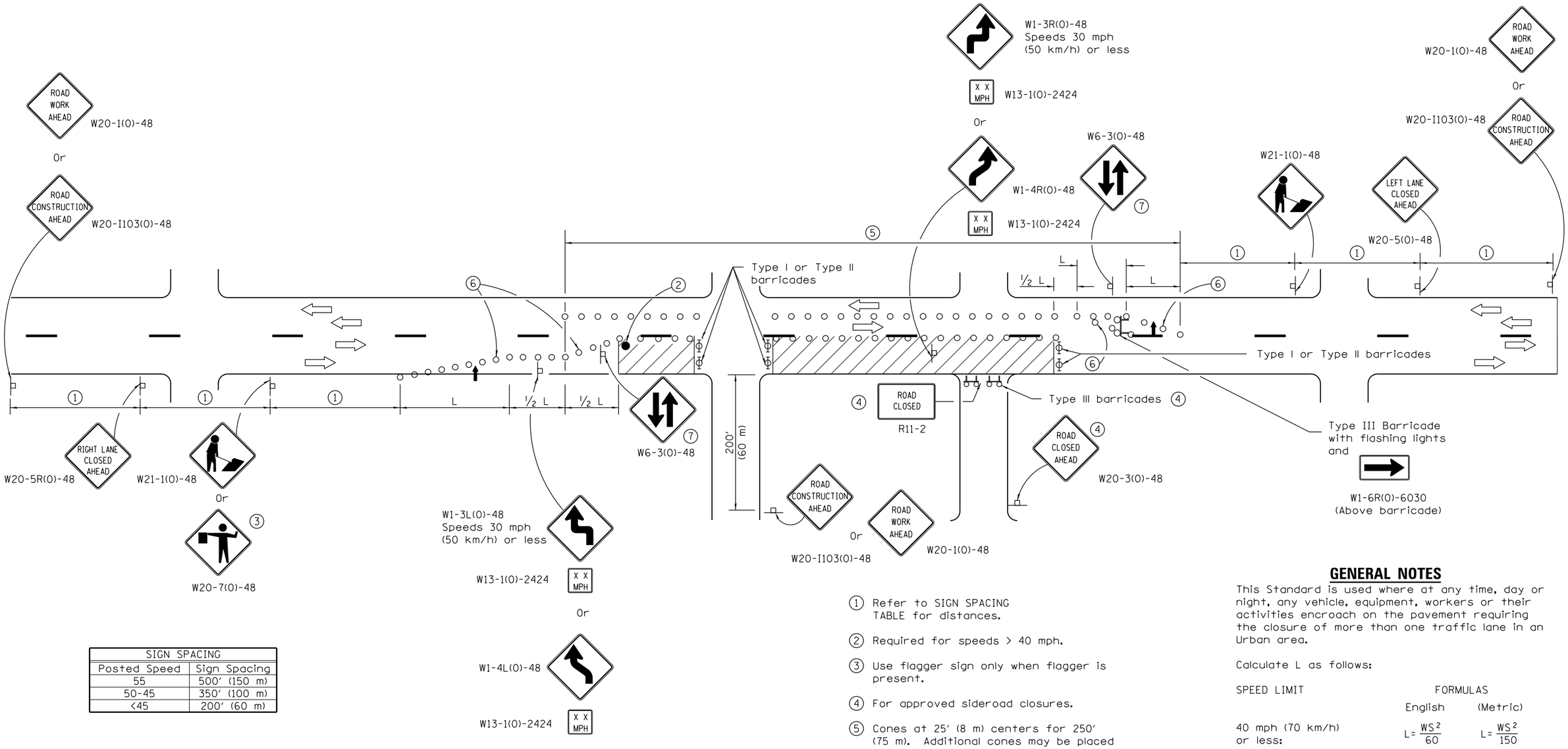


| SIGN SPACING | |
|---|---|
| Posted Speed | Sign Spacing |
| 55 | 500′ (150 m) |
| 50-45 | 350′ (100 m) |
| <45 | 200′ (60 m) |

## SYMBOLS

- Arrow board
- Cone, drum or barricade
- Sign on portable or permanent support
- Work area
- Barricade or drum with flashing light
- Type III barricade with flashing lights
- Flagger with traffic control sign.

1. Refer to SIGN SPACING TABLE for distances.
2. Required for speeds > 40 mph.
3. Use flagger sign only when flagger is present.
4. For approved sideroad closures.
5. Cones at 25′ (8 m) centers for 250′ (75 m). Additional cones may be placed at 50′ (15 m) centers. When drums or Type I or Type II barricades are used, the interval between devices may be doubled.
6. Cones, drums or barricades at 20′ (6 m) centers in taper.
7. Repeat every 1 mile (1.6 km).

## GENERAL NOTES

This Standard is used where at any time, day or night, any vehicle, equipment, workers or their activities encroach on the pavement requiring the closure of more than one traffic lane in an Urban area.

Calculate L as follows:

| SPEED LIMIT | FORMULAS English | FORMULAS (Metric) |
|---|---|---|
| 40 mph (70 km/h) or less: | $L = \frac{WS^2}{60}$ | $L = \frac{WS^2}{150}$ |
| 45 mph (80 km/h) or greater: | L=(W)(S) | L=0.65(W)(S) |

W = Width of offset in feet (meters).

S = Normal posted speed mph (km/h).

All dimensions are in inches (millimeters) unless otherwise shown.

Illinois Department of Transportation

APPROVED April 1, 2016
ENGINEER OF SAFETY ENGINEERING

APPROVED April 1, 2016
ENGINEER OF DESIGN AND ENVIRONMENT

ISSUED 1-1-15

| DATE | REVISIONS |
|---|---|
| 4-1-16 | Moved first reverse |
| | curve/turn sign to |
| | middle of tangent. |
| 1-1-15 | New Standard. |
| | |
| | |

# URBAN HALF ROAD CLOSURE, MULTILANE, 2W WITH MOUNTABLE MEDIAN

**STANDARD 701611–01**

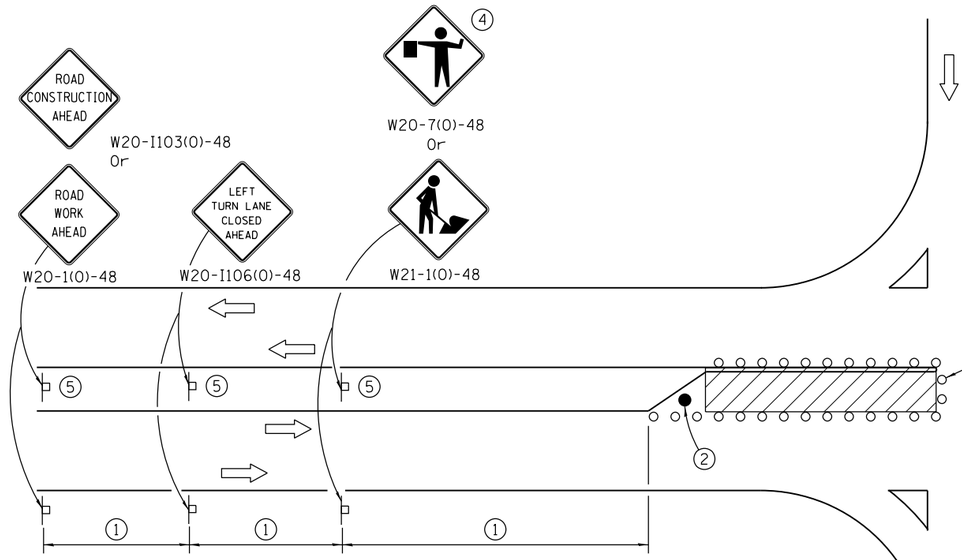


## LEFT TURN LANE OR CENTER MEDIAN OPERATIONS

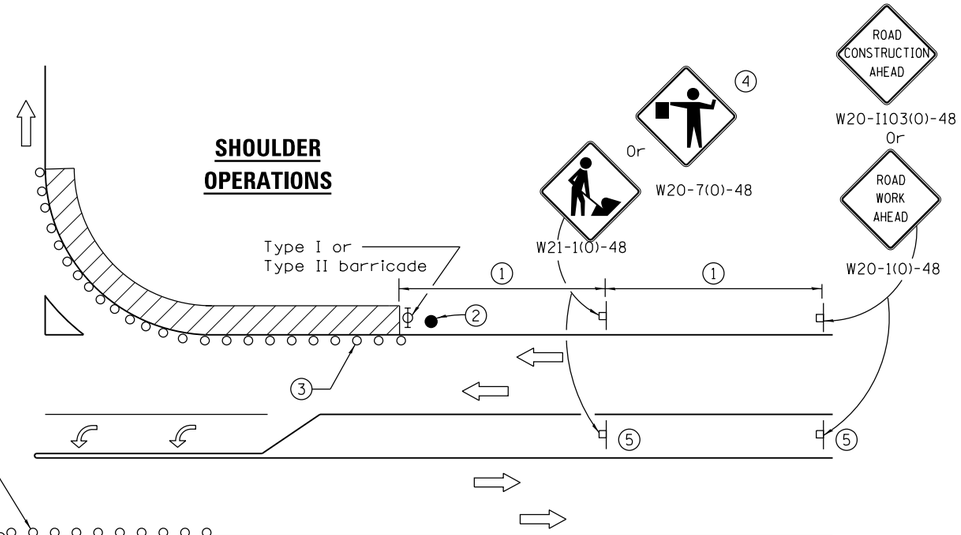


## CORNER ISLAND OPERATIONS

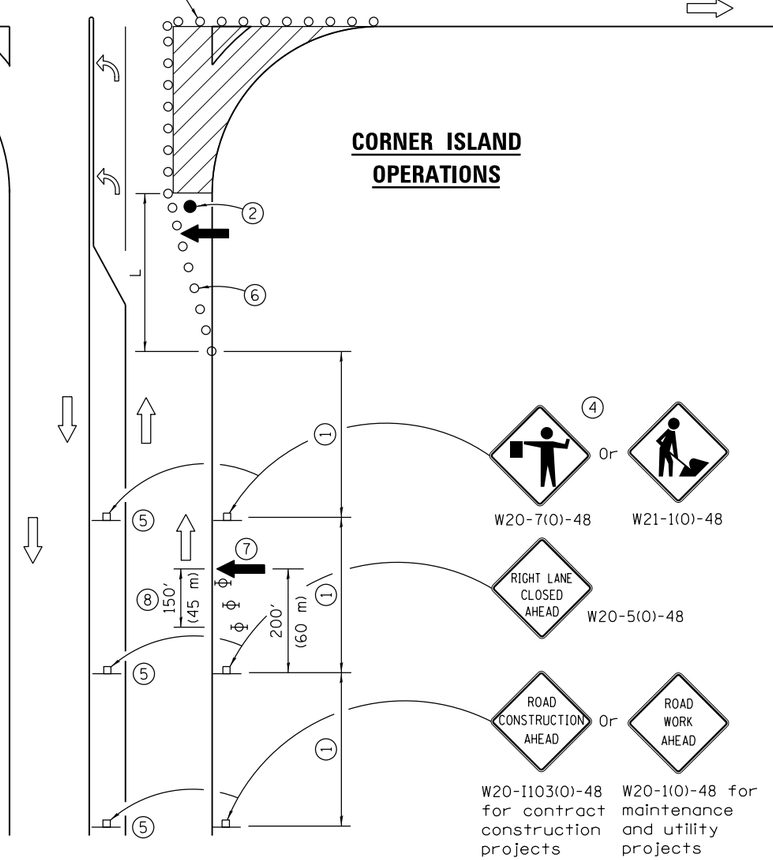


| SIGN SPACING | |
|---|---|
| Posted Speed | Sign Spacing |
| 55 | 500′ (150 m) |
| 50-45 | 350′ (100 m) |
| <45 | 200′ (60 m) |

1. Refer to SIGN SPACING TABLE for distance.
2. Required for speed > 40 mph.
3. Cones at 25′ (8 m) centers for 250′ (75 m). Additional cones may be placed at 50′ (15 m) centers. When drums or Type I or Type II barricades are used, the interval between devices may be doubled.
4. Use flagger sign only when flagger is present.
5. Omit this sign when median is less than 10′ (3 m) or for bi-directional turn lanes.
6. Cones, drums or barricades at 20′ (6 m) centers in taper.
7. Advanced arrow board required for speeds > 45 mph.
8. Three Type II barricades, drums or vertical barricades at 50′ (15 m) centers.

## SYMBOLS

- Work area
- Cone, drum or barricade
- Sign on portable or permanent support
- Arrow board
- Barricade or drum with flashing light
- Flagger with traffic control sign

## GENERAL NOTES

This Standard is used where at any time, day or night, any vehicle, equipment, workers or their activities encroach on the pavement during shoulder operations or where construction requires lane closures in an urban area.

Calculate L as follows:

| SPEED LIMIT | FORMULAS English | FORMULAS (Metric) |
|---|---|---|
| 40 mph (70 km/h) or less: | $L = \frac{WS^2}{60}$ | $L = \frac{WS^2}{150}$ |
| 45 mph (80 km/h) or greater: | L=(W)(S) | L=0.65(W)(S) |

W = Width of offset in feet (meters).

S = Normal posted speed mph (km/h).

All dimensions are in inches (millimeters) unless otherwise shown.

Illinois Department of Transportation

APPROVED April 1, 2016
ENGINEER OF SAFETY ENGINEERING

APPROVED April 1, 2016
ENGINEER OF DESIGN AND ENVIRONMENT

ISSUED 1-1-97

| DATE | REVISIONS |
|---|---|
| 4-1-16 | Corrected sign number for |
| | LEFT TURN LANE CLOSED |
| | AHEAD. |
| 1-1-14 | Added devices at arrow |
| | board upstream from taper. |
| | Rev. workers sign number. |

# URBAN LANE CLOSURE, MULTILANE INTERSECTION

**STANDARD 701701–10**

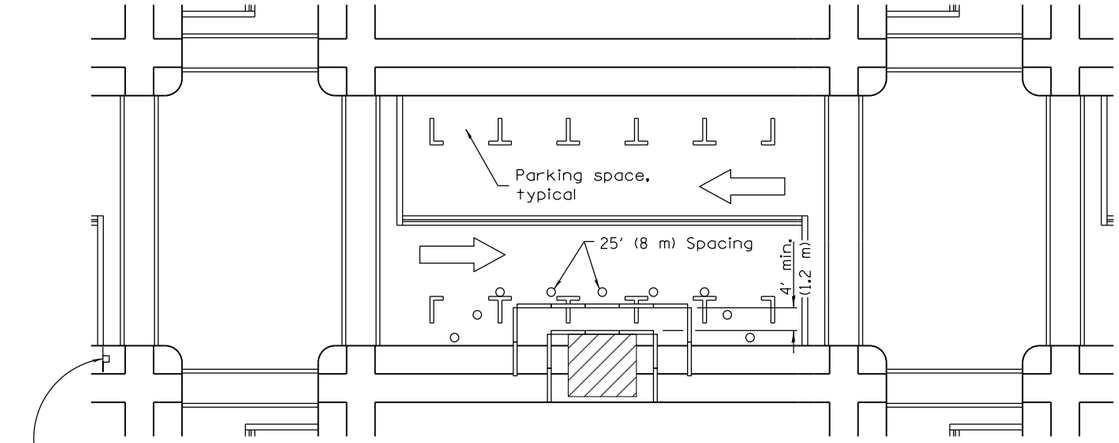


① Omit whenever duplicated by road work traffic control.

① ROAD CONSTRUCTION AHEAD — W20-I103(0)-48 for contract construction projects

Or

① ROAD WORK AHEAD — W20-1(0)-48 for maintenance and utility projects

## SIDEWALK DIVERSION

## SYMBOLS

- Work area
- Sign on portable or permanent support
- Barricade or drum
- Cone, drum or barricade
- Type III barricade
- Detectable pedestrian channelizing barricade

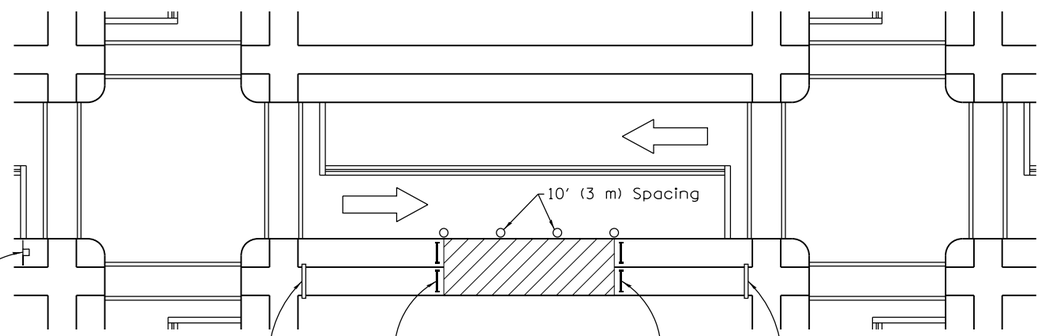


① ROAD CONSTRUCTION AHEAD — W20-I103(0)-48 for contract construction projects

Or

① ROAD WORK AHEAD — W20-1(0)-48 for maintenance and utility projects

SIDEWALK CLOSED — R11-I101-2418

SIDEWALK CLOSED / USE OTHER SIDE — R11-I102-2430

SIDEWALK CLOSED / USE OTHER SIDE — R11-I102-2430

## SIDEWALK CLOSURE

## GENERAL NOTES

This Standard is used where, at any time, pedestrian traffic must be rerouted due to work being performed.

This Standard must be used in conjunction with other Traffic Control & Protection Standards when roadway traffic is affected.

Temporary facilities shall be detectable and accessible.

The temporary pedestrian facilities shall be provided on the same side of the closed facilities whenever possible.

The SIDEWALK CLOSED / USE OTHER SIDE sign shall be placed at the nearest crosswalk or intersection to each end of the closure. Where the closure occurs at a corner, the signs shall be erected on the corners across the street from the closure. The SIDEWALK CLOSED signs shall be used at the ends of the actual closures.

Type III barricades and R11-2-4830 signs shall be positioned as shown in "ROAD CLOSED TO ALL TRAFFIC" detail on Standard 701901.

All dimensions are in inches (millimeters) unless otherwise shown.

| DATE | REVISIONS |
|---|---|
| 4-1-16 | Omitted orange safety fence |
| | from standard as this is |
| | covered in the std. spec. |
| 1-1-12 | Added SIDEWALK DIVERSION. |
| | Modified appearance of |
| | plan views. Renamed Std. |

Illinois Department of Transportation

APPROVED April 1, 2016
ENGINEER OF SAFETY ENGINEERING

APPROVED April 1, 2016
ENGINEER OF DESIGN AND ENVIRONMENT

ISSUED 1-1-97

# SIDEWALK, CORNER OR CROSSWALK CLOSURE

(Sheet 1 of 2)

STANDARD 701801-06

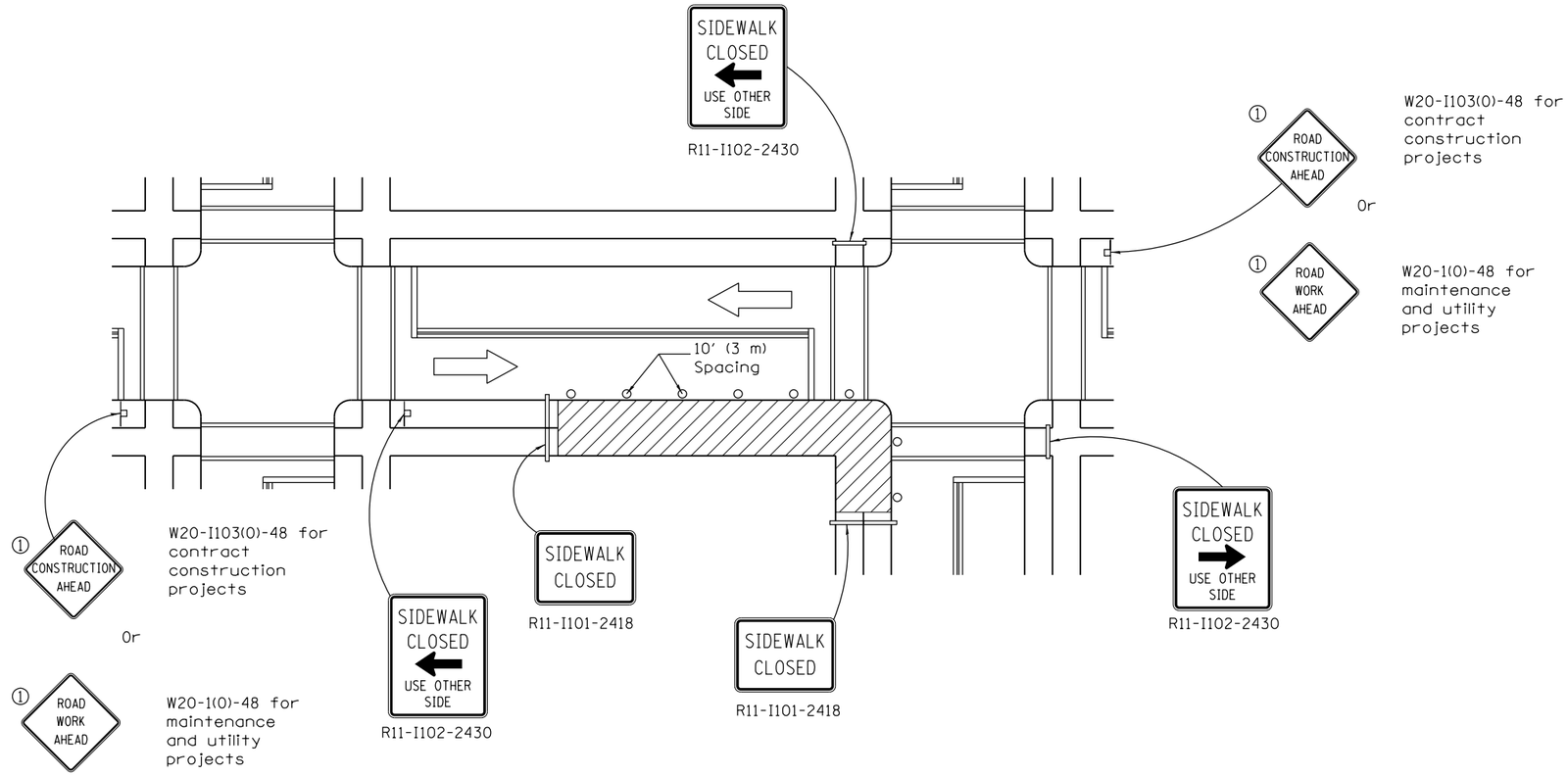


**CORNER CLOSURE**

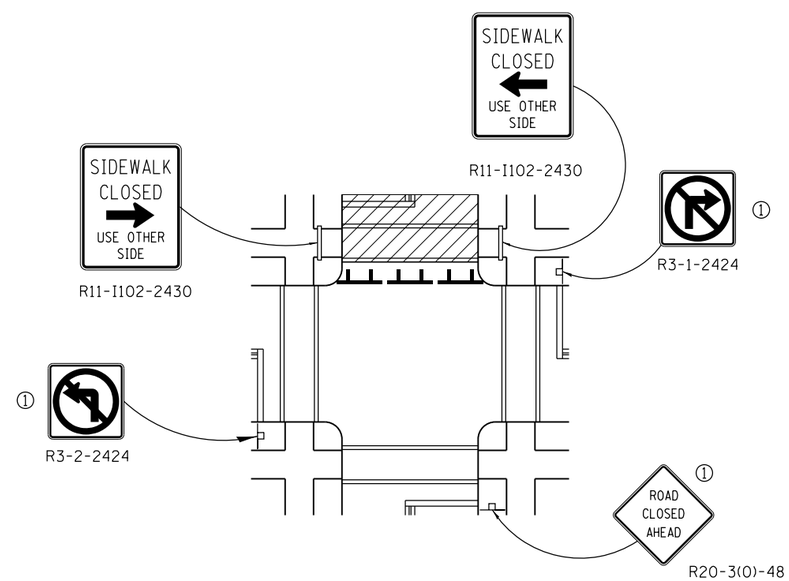


**CROSSWALK CLOSURE**

Illinois Department of Transportation

APPROVED April 1, 2016
ENGINEER OF SAFETY ENGINEERING
APPROVED April 1, 2016
ENGINEER OF DESIGN AND EVIRONMENT

ISSUED 1-1-97

# SIDEWALK, CORNER OR CROSSWALK CLOSURE

(Sheet 2 of 2)

**STANDARD 701801–06**

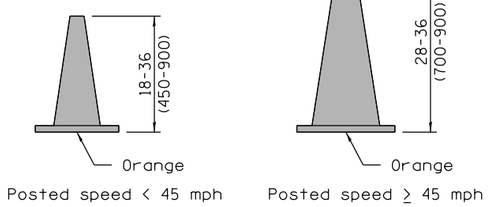


**CONE FOR DAYTIME**

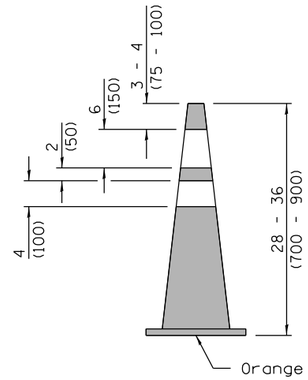


**REFLECTORIZED CONE FOR NIGHTTIME**

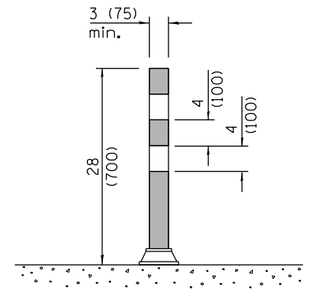


**FLEXIBLE DELINEATOR**

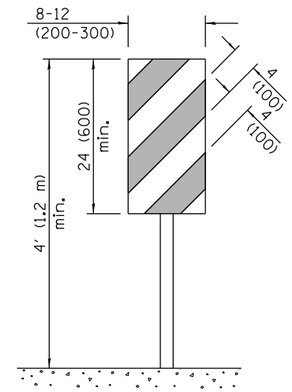


**VERTICAL PANEL**
POST MOUNTED

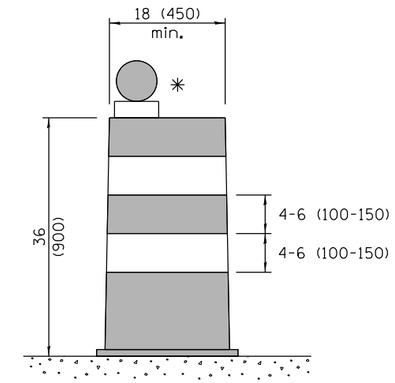


**DRUM**

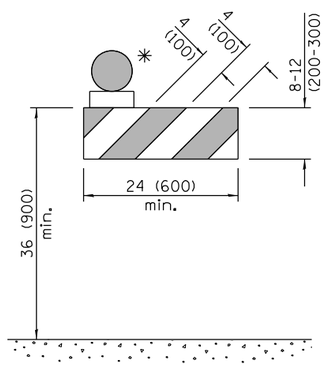


**TYPE I BARRICADE**

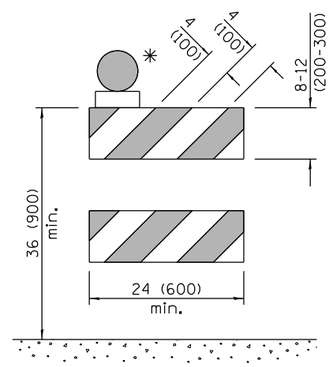


**TYPE II BARRICADE**

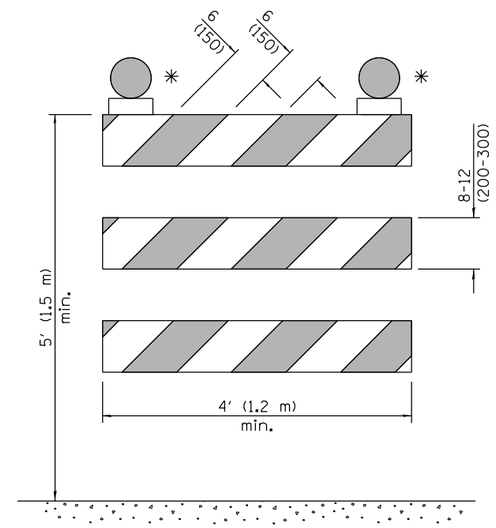


**TYPE III BARRICADE**

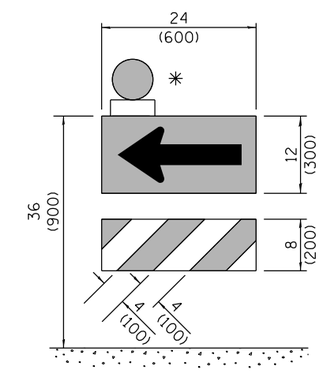


**DIRECTION INDICATOR BARRICADE**

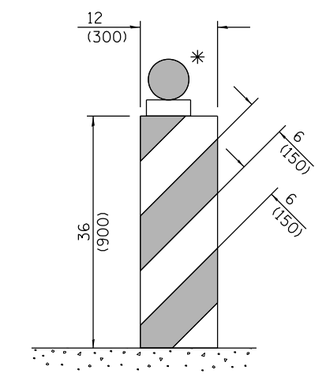


**VERTICAL BARRICADE**

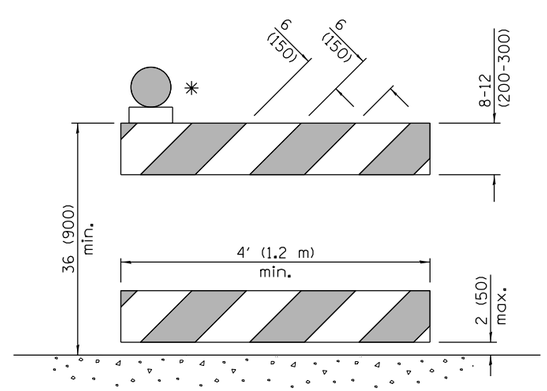


**DETECTABLE PEDESTRIAN CHANNELIZING BARRICADE**

✳ Warning lights (if required)

## GENERAL NOTES

All heights shown shall be measured above the pavement surface.

All dimensions are in inches (millimeters) unless otherwise shown.

| DATE | REVISIONS |
|---|---|
| 4-1-16 | Add dim's to barricades. Rev. |
| | note for post mnt. signs. |
| | Rev. cone dtls. Add W12-I103. |
| 1-1-15 | Revised two sign numbers on |
| | sheet 2. Added note reg. |
| | PHOTO ENFORCED plaque. |

# TRAFFIC CONTROL DEVICES

(Sheet 1 of 3)

**STANDARD 701901-05**

Illinois Department of Transportation

APPROVED April 1, 2016
ENGINEER OF OPERATIONS

APPROVED April 1, 2016
ENGINEER OF DESIGN AND ENVIRONMENT

ISSUED 1-1-97

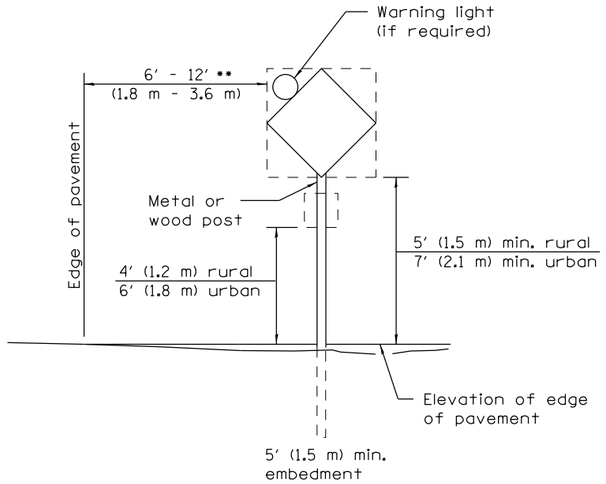


## POST MOUNTED SIGNS

•• When curb or paved shoulder are present this dimension shall be 24 (600) to the face of curb or 6′ (1.8 m) to the outside edge of the paved shoulder.

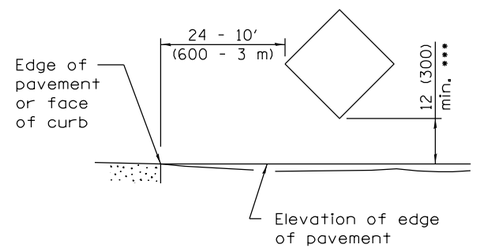


## SIGNS ON TEMPORARY SUPPORTS

••• When work operations exceed four days, this dimension shall be 5′ (1.5 m) min. If located behind other devices, the height shall be sufficient to be seen completely above the devices.

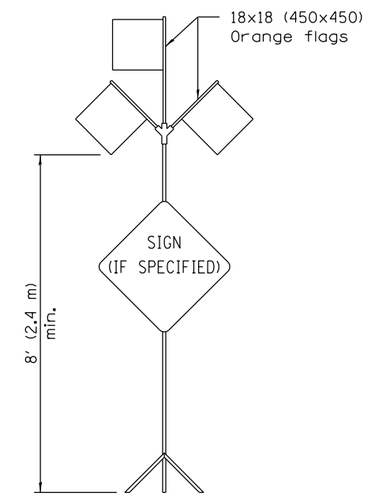


## HIGH LEVEL WARNING DEVICE

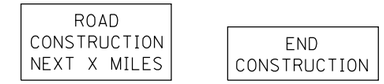


G20-I104(0)-6036 G20-I105(0)-6024

This signing is required for all projects 2 miles (3200 m) or more in length.

ROAD CONSTRUCTION NEXT X MILES sign shall be placed 500′ (150 m) in advance of project limits.

END CONSTRUCTION sign shall be erected at the end of the job unless another job is within 2 miles (3200 m).

Dual sign displays shall be utilized on multi-lane highways.

## WORK LIMIT SIGNING

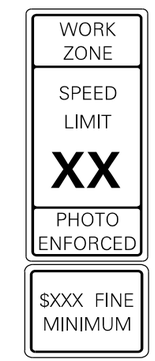


W21-I115(0)-3618

R2-1-3648

R10-I108p-3618 ••••

R2-I106p-3618

Sign assembly as shown on Standards or as allowed by District Operations.

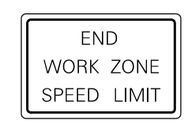


G20-I103(0)-6036

This sign shall be used when the above sign assembly is used.

## HIGHWAY CONSTRUCTION SPEED ZONE SIGNS

•••• R10-I108p shall only be used along roadways under the juristiction of the State.

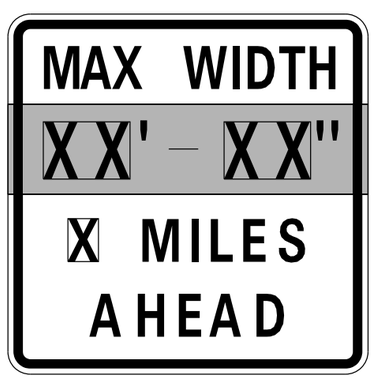


W12-I103-4848

## WIDTH RESTRICTION SIGN

XX′-XX″ width and X miles are variable.

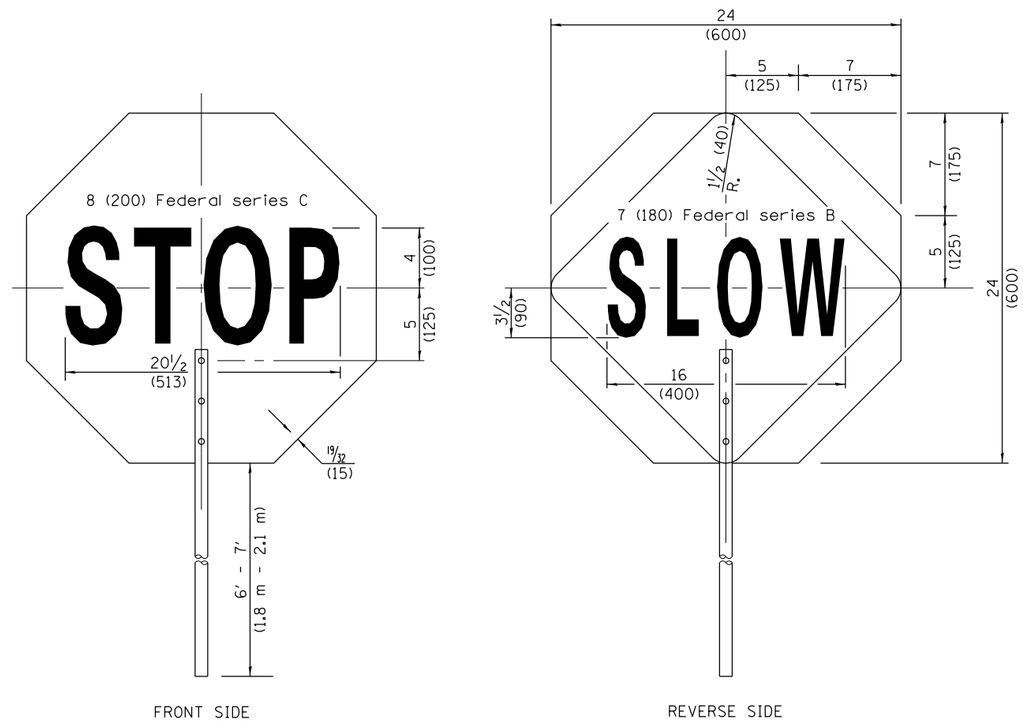


## FLAGGER TRAFFIC CONTROL SIGN

Illinois Department of Transportation

APPROVED April 1, 2016
ENGINEER OF OPERATIONS

APPROVED April 1, 2016
ENGINEER OF DESIGN AND ENVIRONMENT

ISSUED 1-1-97

# TRAFFIC CONTROL DEVICES

(Sheet 2 of 3)

STANDARD 701901–05

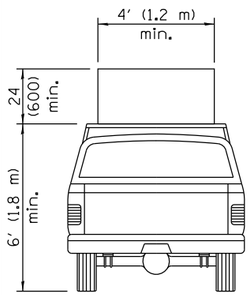


**TYPE A**
**ROOF**
**MOUNTED**

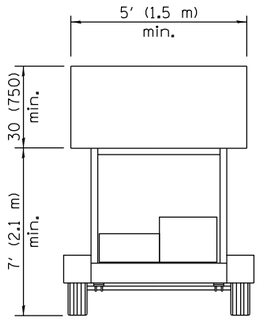


**TYPE B**
**ROOF OR TRAILER**
**MOUNTED**

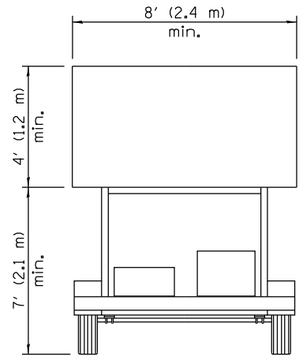


**TYPE C**
**TRAILER**
**MOUNTED**

**ARROW BOARDS**

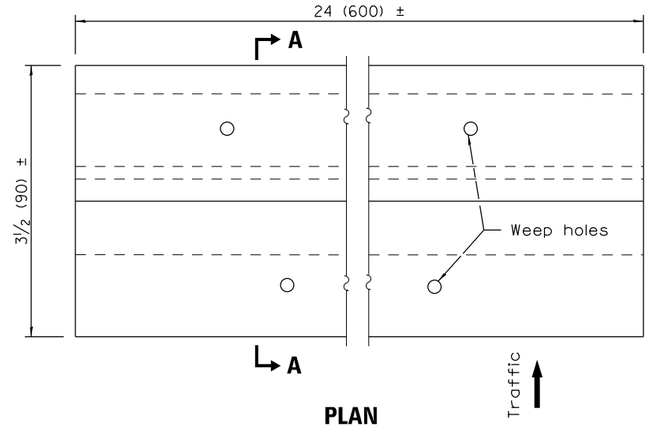


**PLAN**

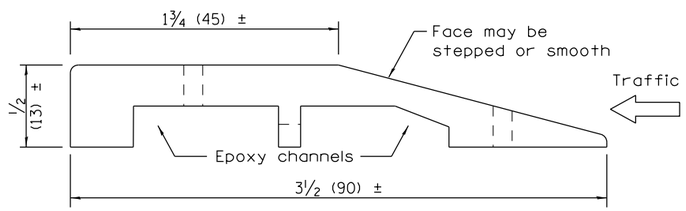


**SECTION A–A**

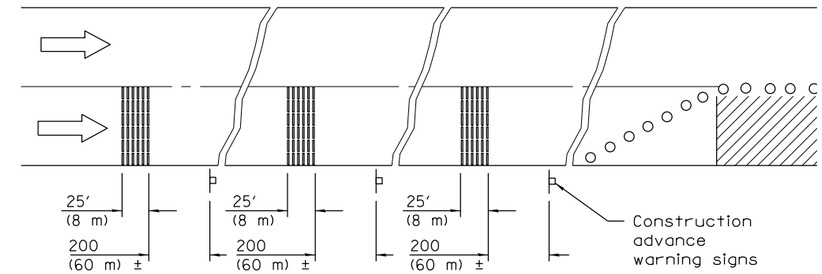


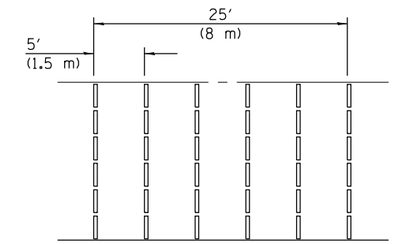


**TYPICAL INSTALLATION**

**TEMPORARY RUMBLE STRIPS**

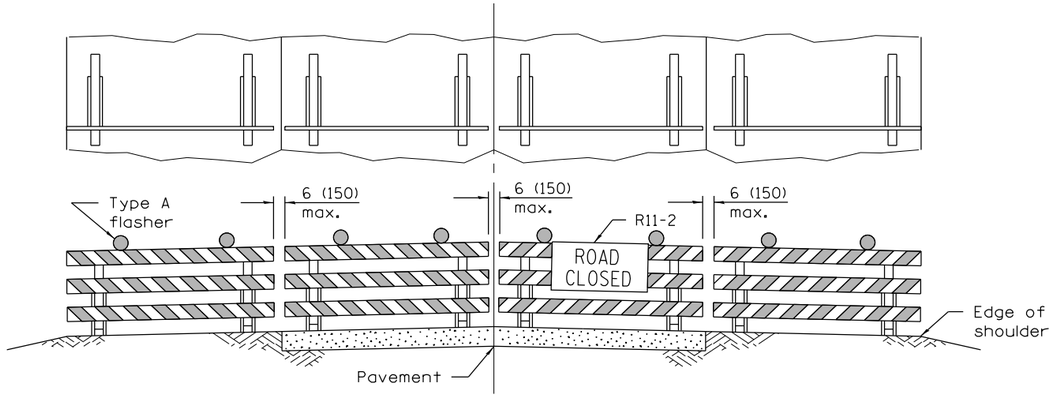


ROAD CLOSED TO ALL TRAFFIC

Reflectorized striping may be omitted on the back side of the barricades. If a Type III barricade with an attached sign panel which meets NCHRP 350 is not available, the sign may be mounted on an NCHRP 350 temporary sign support directly in front of the barricade.

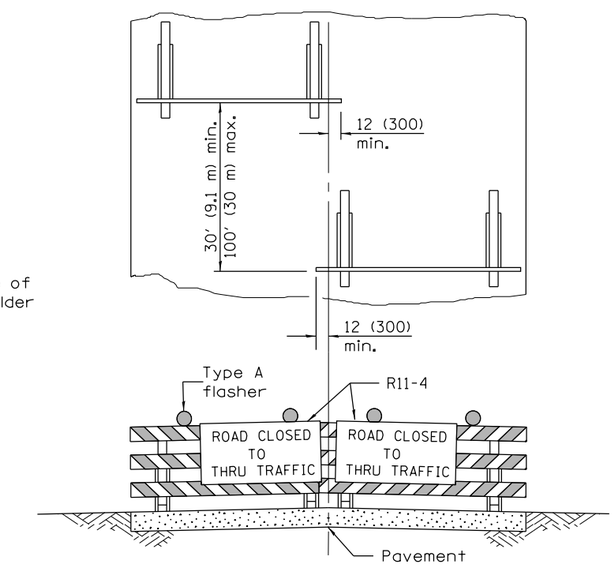


ROAD CLOSED TO THRU TRAFFIC

Reflectorized striping shall appear on both sides of the barricades. If a Type III barricade with an attached sign panel which meets NCHRP 350 is not available, the signs may be mounted on NCHRP 350 temporary sign supports directly in front of the barricade.

**TYPICAL APPLICATIONS OF**
**TYPE III BARRICADES CLOSING A ROAD**

Illinois Department of Transportation

APPROVED April 1, 2016
ENGINEER OF OPERATIONS
APPROVED April 1, 2016
ENGINEER OF DESIGN AND ENVIRONMENT

ISSUED 1-1-97

# TRAFFIC CONTROL DEVICES

(Sheet 3 of 3)

**STANDARD 701901–05**

# F SHAPE DESIGN

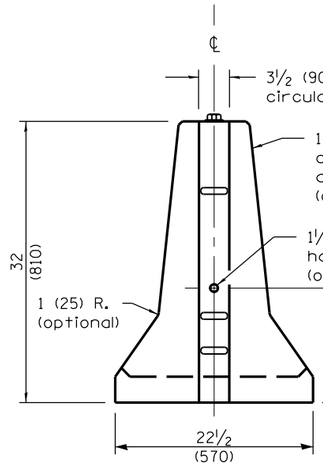


**END VIEW**
(Showing lifting slot)

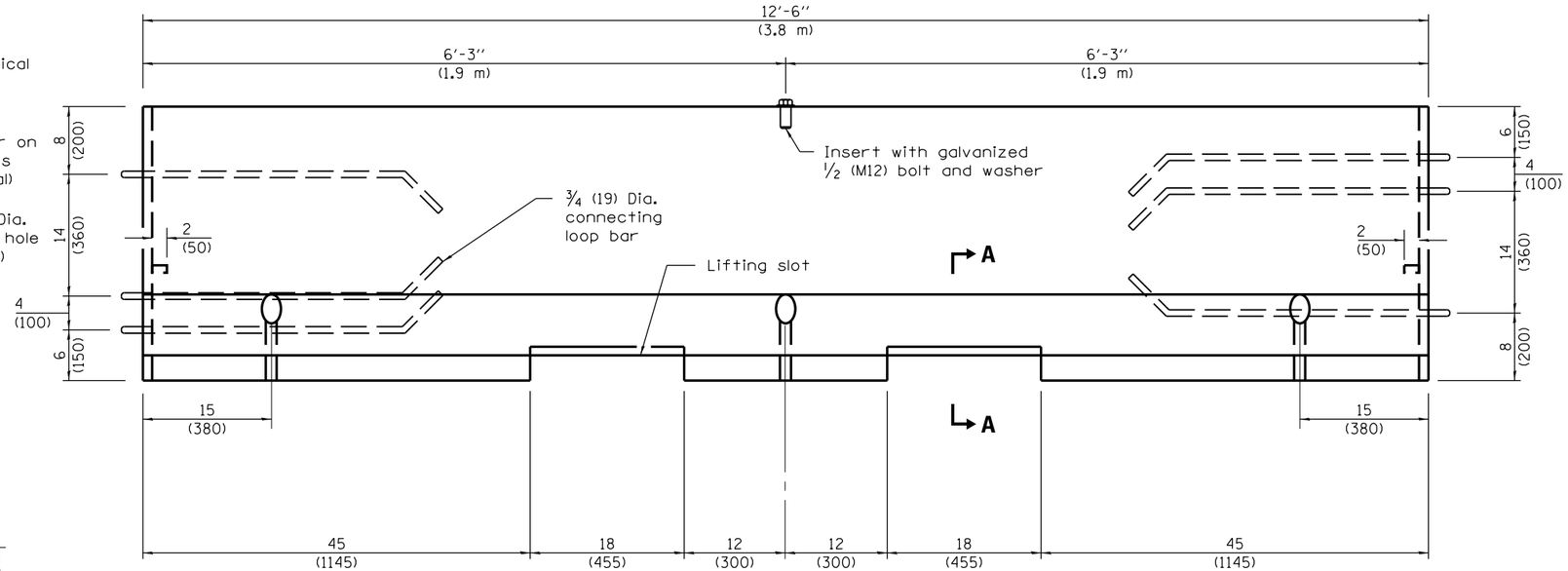


**ELEVATION**
(Showing connecting loop bars and vertical panel bolt/insert)

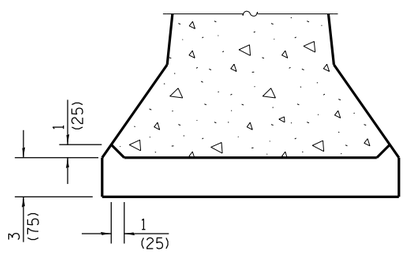


**SECTION A–A**
**LIFTING SLOT**

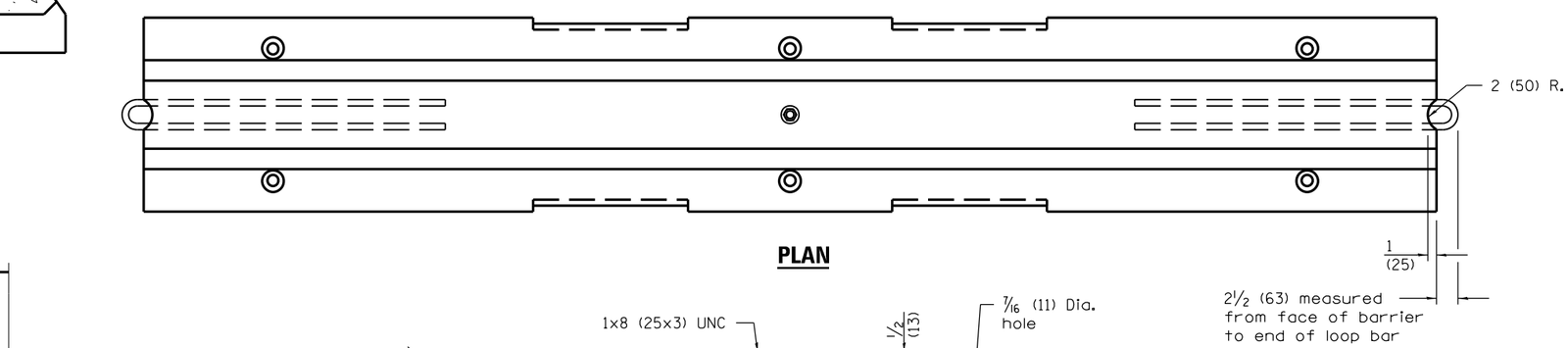


**PLAN**

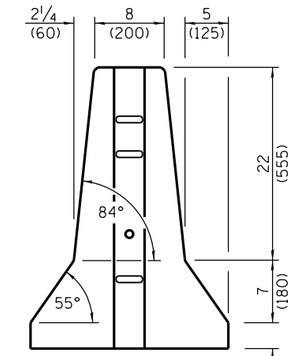


**END VIEW**

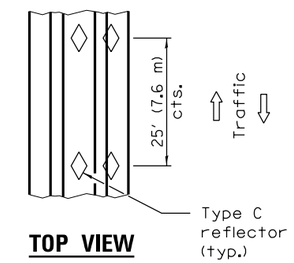


**TOP VIEW**

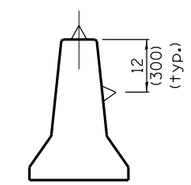


**BARRIER WALL REFLECTORS**

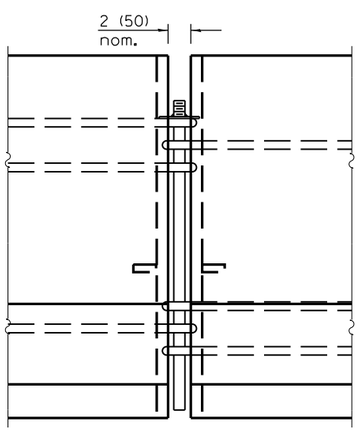


**CONNECTING DETAIL**

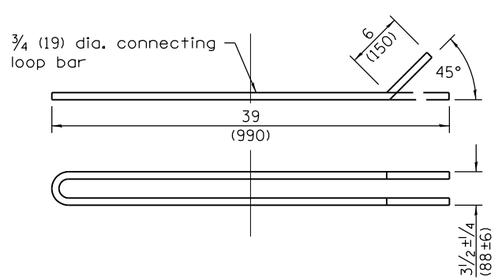


**CONNECTING LOOP BAR**

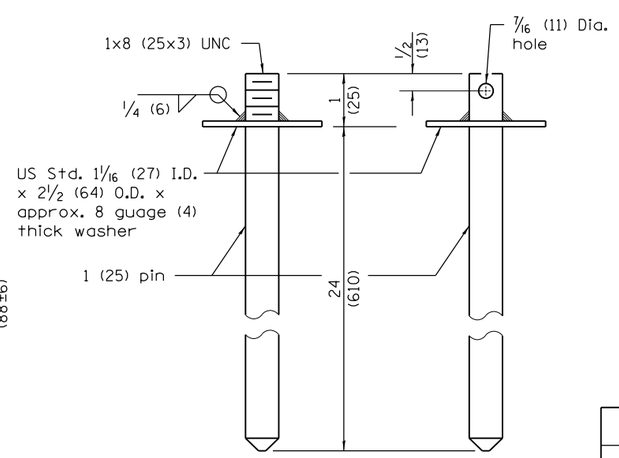


**CONNECTING AND ANCHOR PINS**
(End may be beveled ¼ (6) max.)

## GENERAL NOTES

Each F shape barrier shall be clearly marked with "ILLINOIS F SHAPE", the Producer's mark and the date of manufacture. The markings shall be indented on the barrier or painted thereon with waterproof paint/ink.

The insert for the ½ (M12) bolt shall be capable of 3,000 lb (13 kN) pull-out strength.

When barrier separates opposing flows of traffic markers shall be on both sides of barrier.

See Standard 782006 for dimensions of Type C reflector.

All dimensions are in inches (millimeters) unless otherwise shown.

Illinois Department of Transportation

PASSED April 1, 2016
ENGINEER OF POLICY AND PROCEDURES
APPROVED April 1, 2016
ENGINEER OF DESIGN AND ENVIRONMENT

ISSUED 10-1-02

| DATE | REVISIONS |
|---|---|
| 4-1-16 | Rev. opt. chamfer on all |
| | edges to 1 (25). Reference |
| | to Std. 635011 now 782006. |
| 1-1-12 | Omitted 'ALTERNATE' from |
| | connecting and anchoring |
| | pins detail. |

# TEMPORARY CONCRETE BARRIER

(Sheet 1 of 2)

**STANDARD 704001–08**

F SHAPE DESIGN

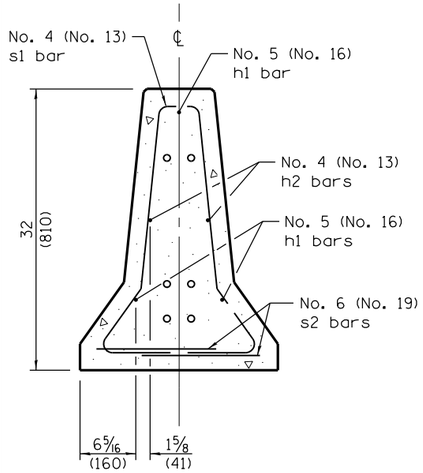


SECTION C–C

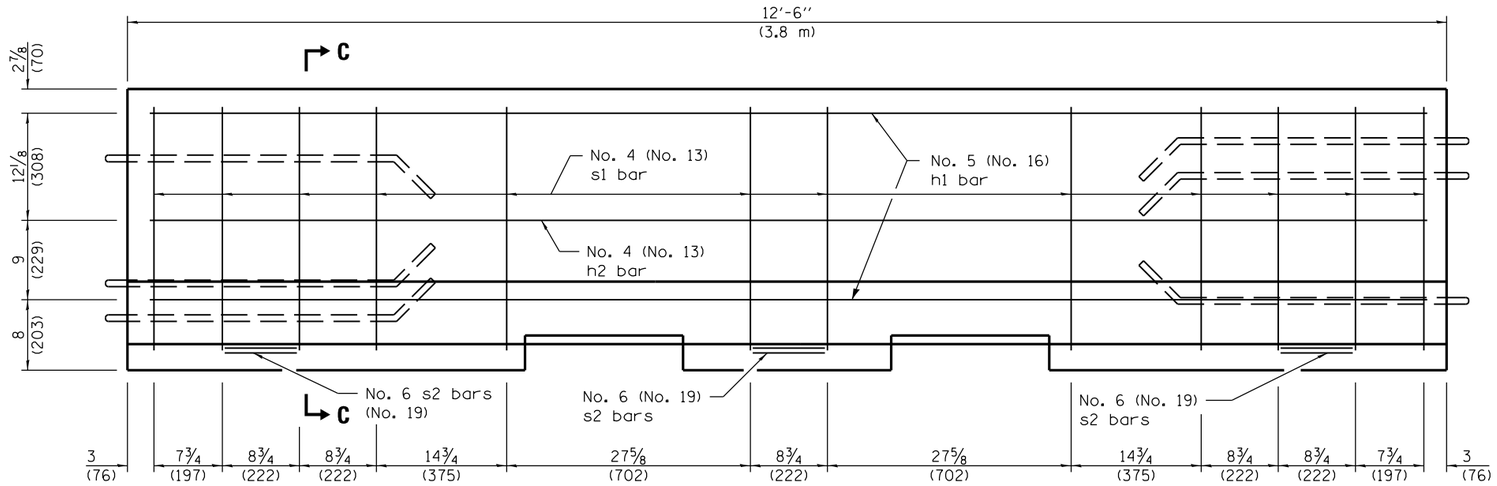


ELEVATION
(Reinforcement)

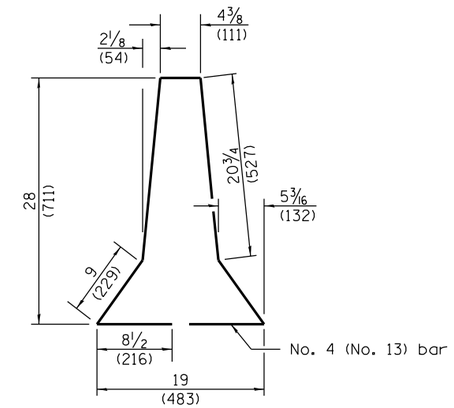


s1 BAR

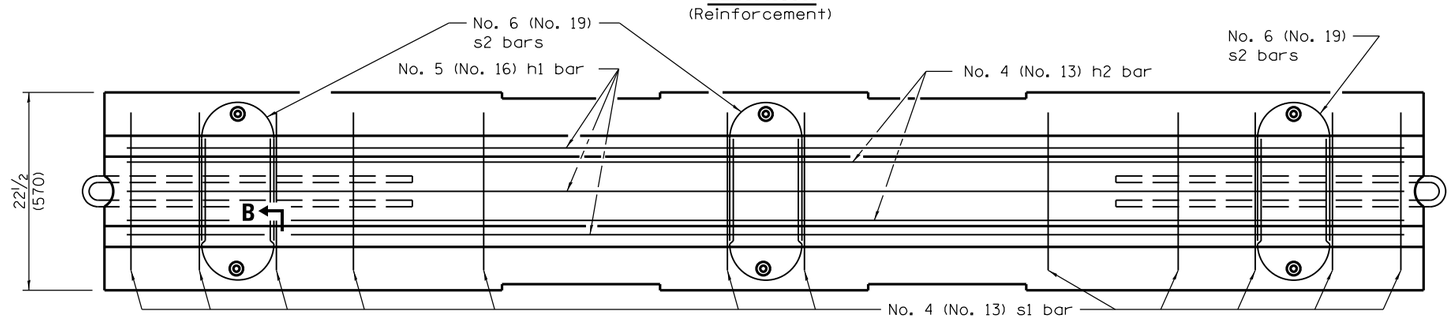


PLAN

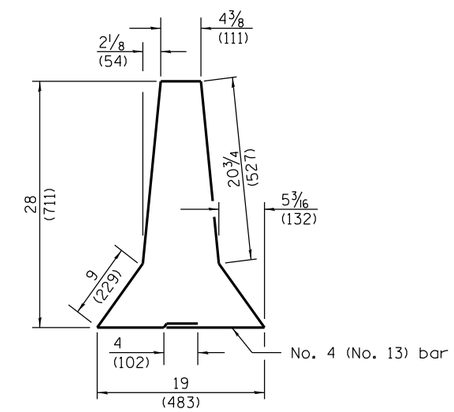


ALTERNATE s1 BAR

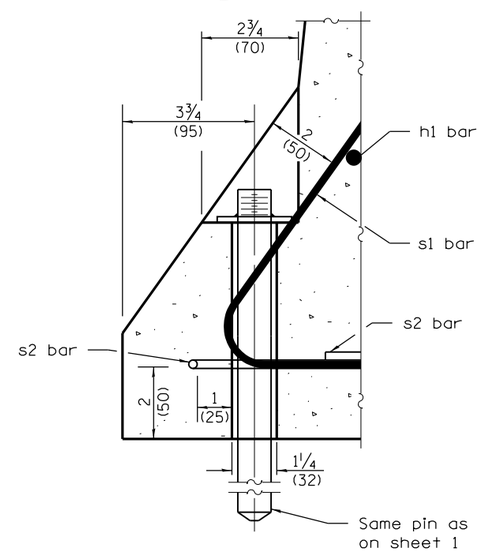


SECTION B–B
ANCHORING DETAIL

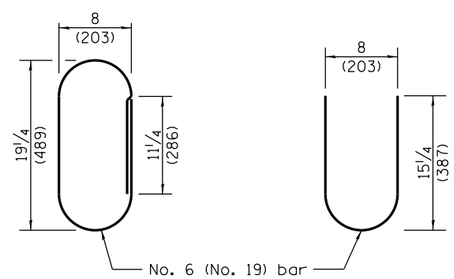


ALTERNATE s2 BARS

Illinois Department of Transportation

PASSED April 1, 2016
ENGINEER OF POLICY AND PROCEDURES
APPROVED April 1, 2016
ENGINEER OF DESIGN AND ENVIRONMENT

ISSUED 10-1-02

# TEMPORARY CONCRETE BARRIER

(Sheet 2 of 2)

STANDARD 704001–08

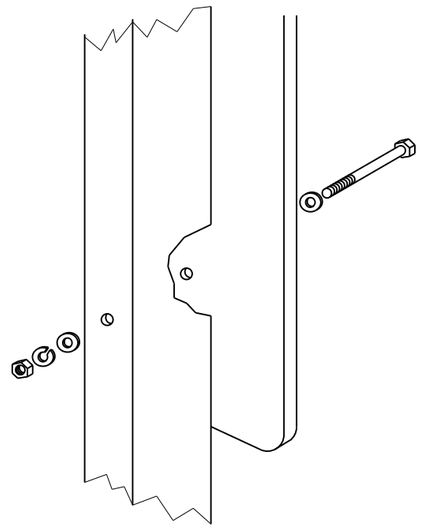

Sign panel 36 (900) wide or less

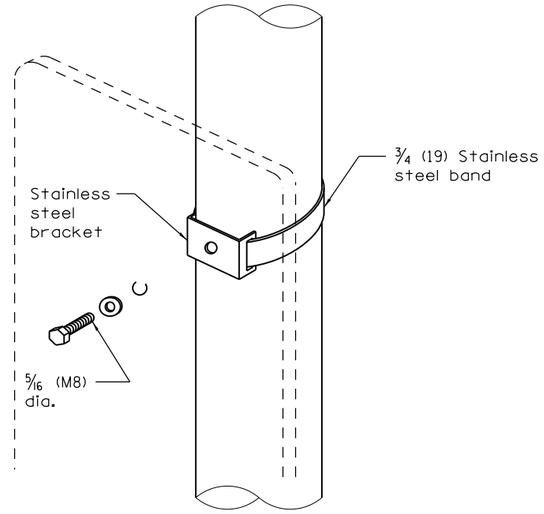


Sign panel 36 (900) wide or less

| Section modulus (minimum) | Axis A | Axis B |
|---|---|---|
| Steel | 0.050 in.$^3$ (819 mm$^3$) | 0.105 in.$^3$ (1720 mm$^3$) |
| Aluminum | 0.150 in.$^3$ (2458 mm$^3$) | 0.315 in.$^3$ (5162 mm$^3$) |

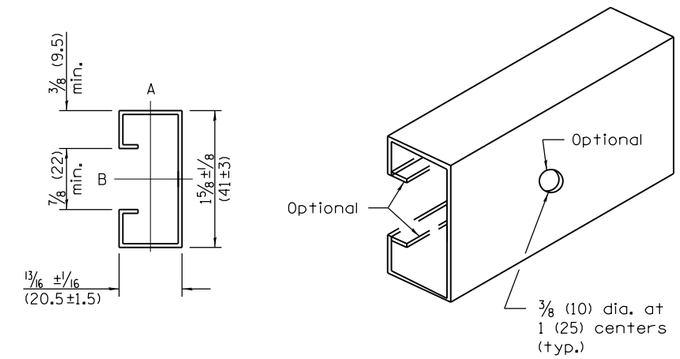


**SUPPORTING CHANNEL DETAILS**

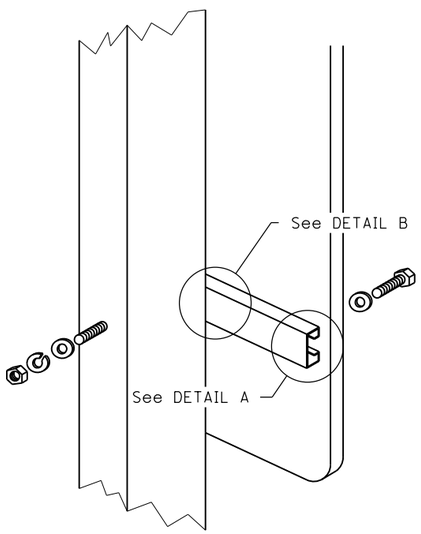


Sign panel over 36 (900) wide

**WOOD OR TELESCOPING STEEL POSTS**

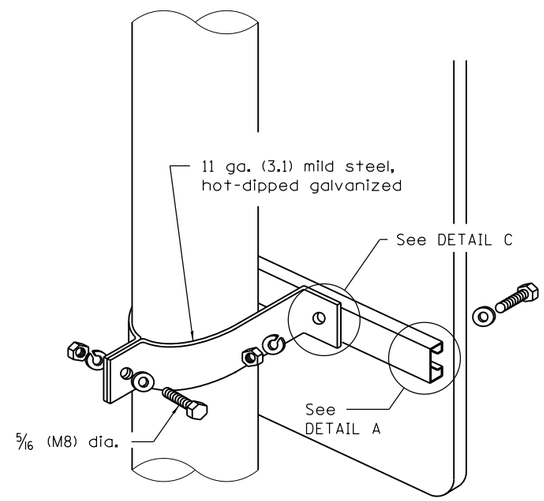


Sign panel over 36 (900) wide

**LIGHT OR SIGNAL STANDARDS**

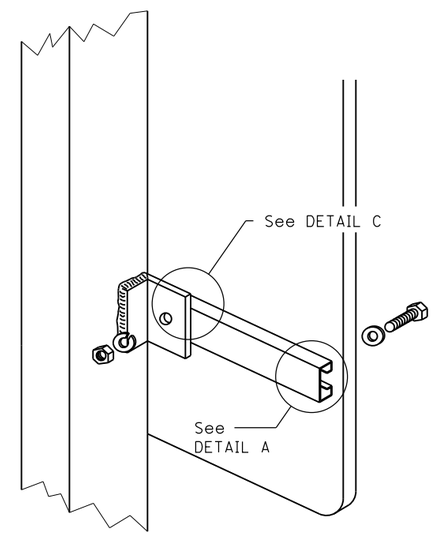


**BREAKAWAY STEEL TUBING POSTS**
(All sign panel sizes)

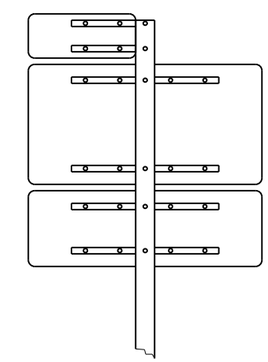

**ROUTE MARKER ASSEMBLY**

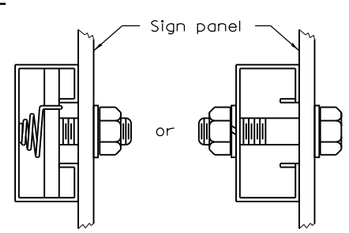


**DETAIL A**

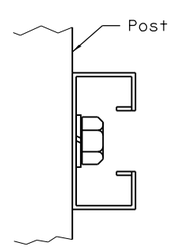


**DETAIL B**

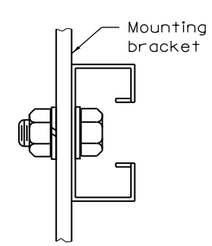


**DETAIL C**

All dimensions are in inches (millimeters) unless otherwise shown.

| DATE | REVISIONS |
|---|---|
| 1-1-09 | Switched units to English (metric). |
| 1-1-97 | Renum. Standard 2319-6. |

Illinois Department of Transportation

APPROVED January 1, 2009
ENGINEER OF OPERATIONS
APPROVED January 1, 2009
ENGINEER OF DESIGN AND ENVIRONMENT

ISSUED 1-1-97

# SIGN PANEL MOUNTING DETAILS

**STANDARD 720001–01**

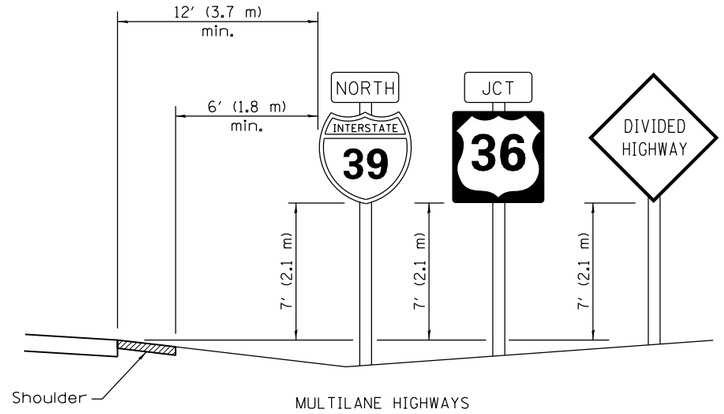


MULTILANE HIGHWAYS

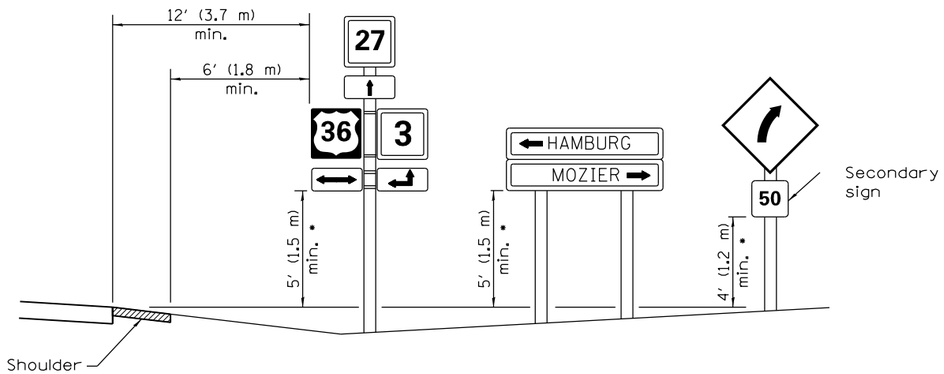


• In any area where parking is likely to occur or where there are obstructions to view or where signs are located over sidewalks, the height shall be at least 7′ (2.1 m).

TWO LANE RURAL HIGHWAYS

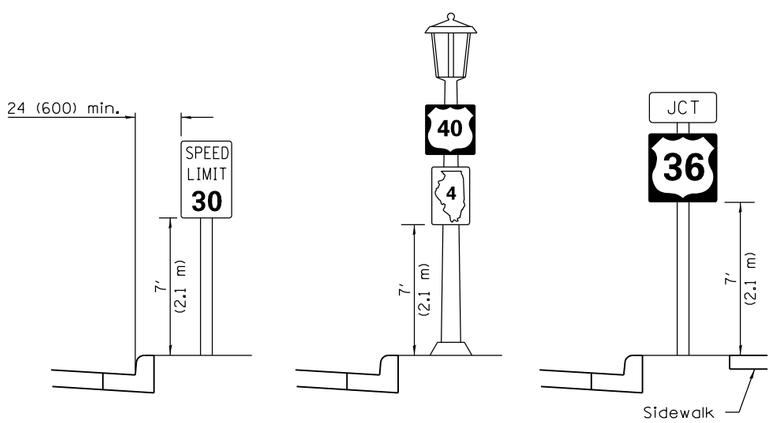


URBAN LOCATIONS

## TYPICAL INSTALLATIONS

Signs in any area shall be erected to a uniform height above the edge of the pavement.

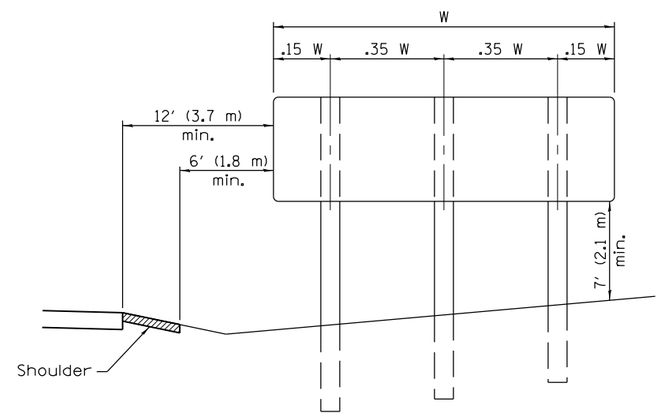


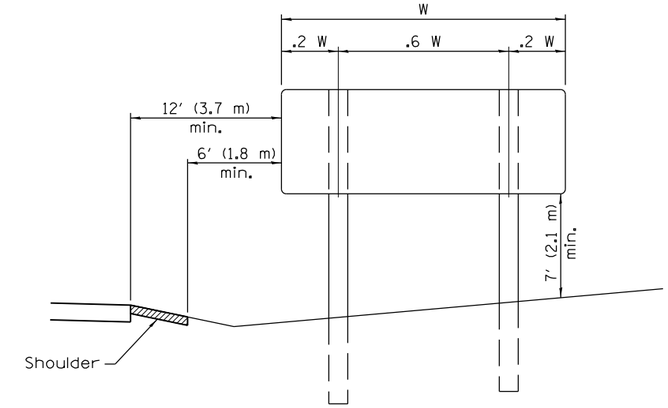


## POST SPACING FOR NON-FREEWAY SIGN PANELS

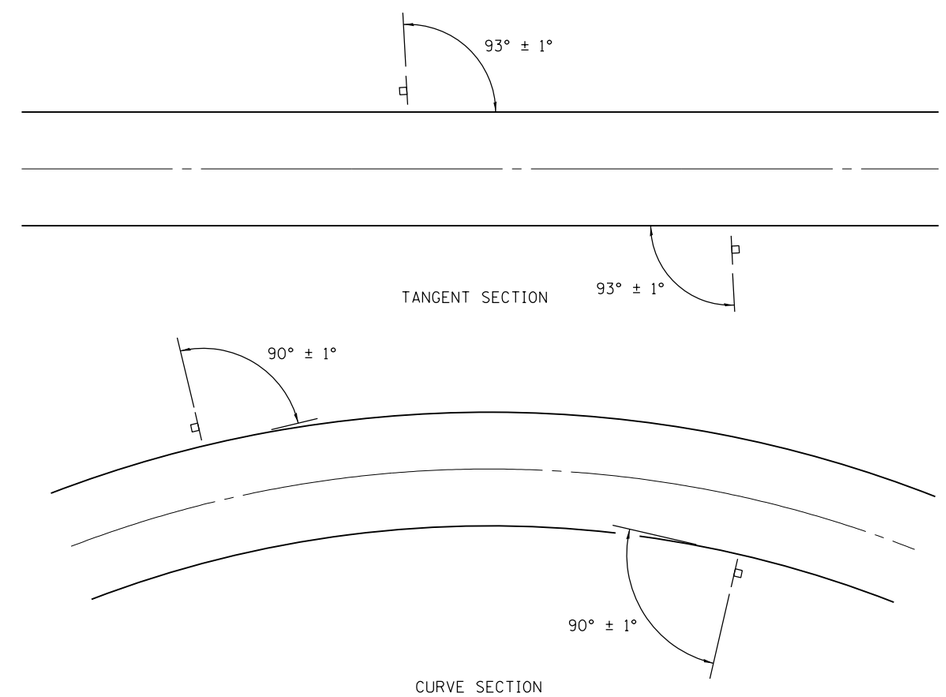


## GROUND MOUNT SIGN POSITIONING

All dimensions are in inches (millimeters) unless otherwise shown.

Illinois Department of Transportation

APPROVED January 1, 2014
ENGINEER OF OPERATIONS
APPROVED January 1, 2014
ENGINEER OF DESIGN AND ENVIRONMENT

ISSUED 1-1-97

| DATE | REVISIONS |
|---|---|
| 1-1-14 | Added shoulders and slopes. |
| | Changed sign distances |
| | from roadway and shoulder. |
| 1-1-12 | Rev. sign elev. for multilane |
| | hwy's. Revised sign elev. and |
| | dist. to curb for rural loc. |

# SIGN PANEL ERECTION DETAILS

STANDARD 720006–04

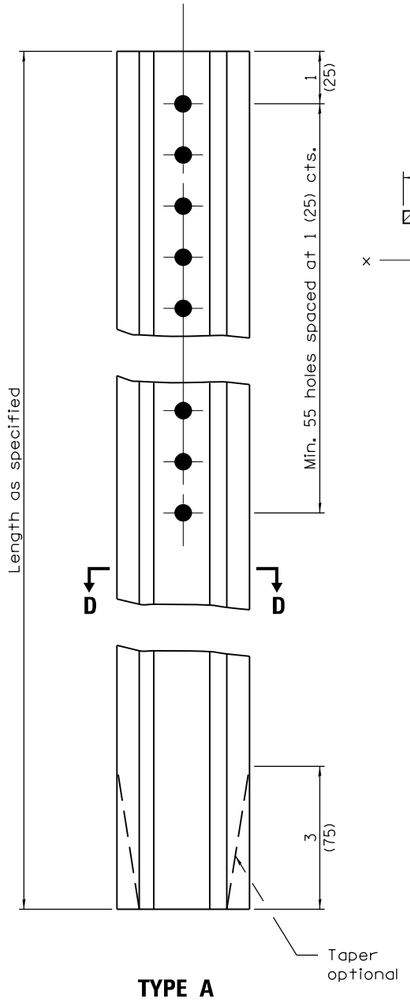


**TYPE A**

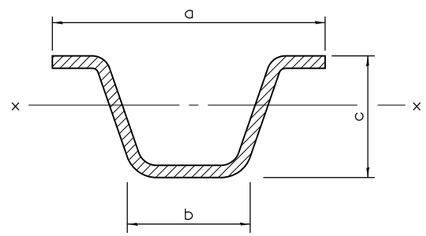


**SECTION D–D**

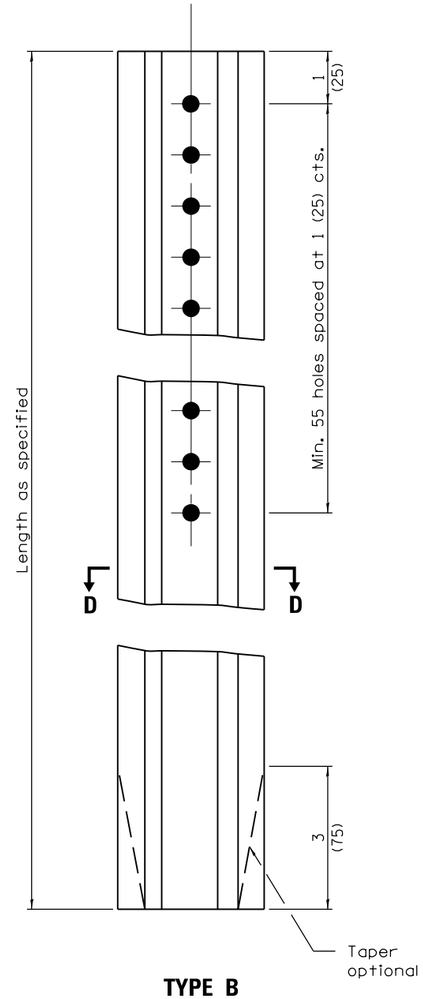


**TYPE B**

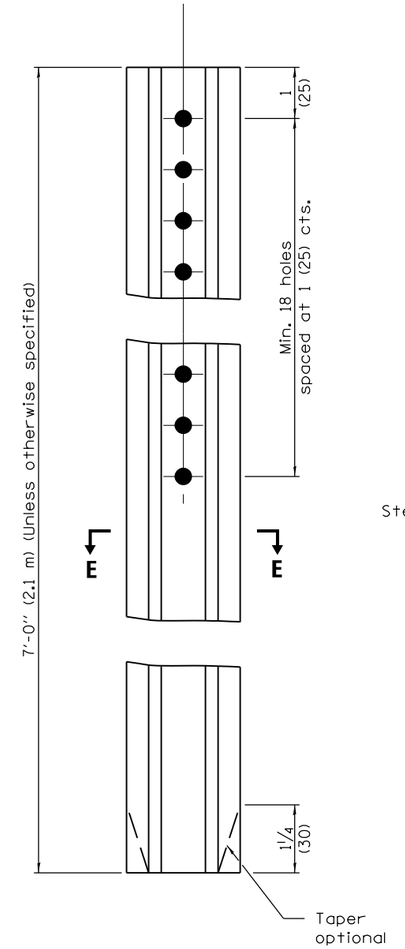


**TYPE C**

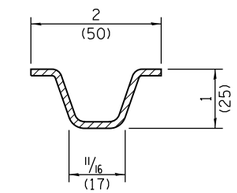


**SECTION E–E**

Steel - 1.12 lbs./ft. (1.67 kg/m)

| | | a | b | c | Sx-x in.$^3$ (mm$^3$) | lbs./ft. (kg/m) |
|---|---|---|---|---|---|---|
| TYPE A | Steel | 3 1/16 (78) | 1 1/4 (32) | 1 7/16 (37) | 0.223 (3,654) | 2.00 (2.98) |
| | Aluminum | 3 1/2 (89) | 1 5/8 (41) | 1 7/8 (48) | 0.435 (7,128) | 0.90 (1.34) |
| TYPE B | Steel | 3 3/16 (81) | 1 1/4 (32) | 1 1/2 (38) | 0.341 (5,588) | 3.00 (4.46) |
| | Aluminum | 4 5/8 (118) | 2 1/4 (57) | 2 3/8 (60) | 0.888 (14,552) | 1.30 (1.93) |

## GENERAL NOTES

Dimensions shown for cross sections are minimum.

All holes are 3/8 (10).

Sx-x is the minimum section modulus about the x-x axis of the post as shown. For posts in which holes are punched or drilled for more than half their length, Sx-x shall be computed for the net section.

All dimensions are in inches (millimeters) unless otherwise shown.

Illinois Department of Transportation

PASSED January 1, 2009
ENGINEER OF POLICY AND PROCEDURES

APPROVED January 1, 2009
ENGINEER OF DESIGN AND ENVIRONMENT

ISSUED 1-1-97

| DATE | REVISIONS |
|---|---|
| 1-1-09 | Switched units to English (metric). |
| 1-1-97 | Renum. Standard 2350-4. |

# METAL POSTS FOR SIGNS, MARKERS & DELINEATORS

**STANDARD 720011–01**

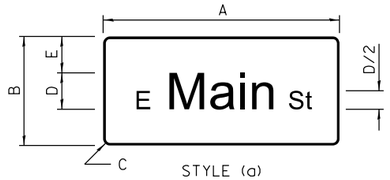


STYLE (a)

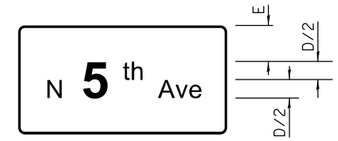


STYLE (b)

STYLE (c)

STYLE (d)

STYLE (e)

When road classification only is on the second line, it should not be abbreviated.

STYLE (f)

## TYPICAL SIGN STYLES

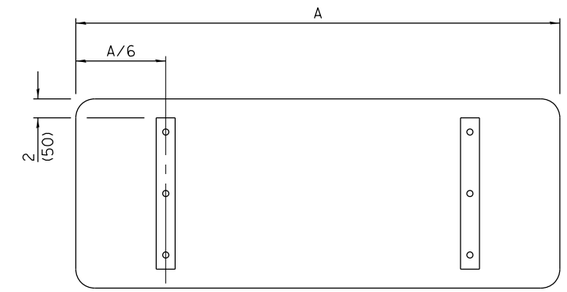


## SUPPORTING CHANNELS

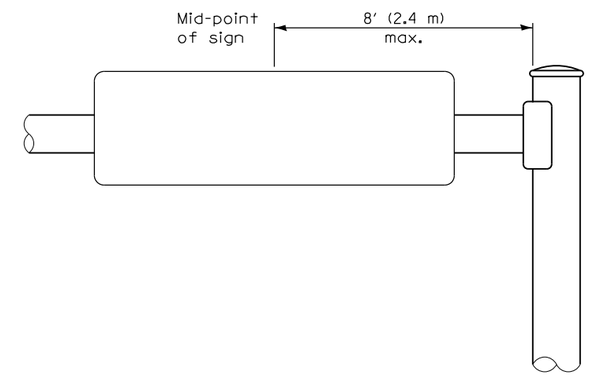


## MOUNTING LOCATION

| SIGN STYLE | DIMENSIONS | | | | | | | | LETTER SIZE UC/LC PRIMARY | | | BORDER |
|---|---|---|---|---|---|---|---|---|---|---|---|---|
| | A | B | C | D | E | F | G | H | 1 | 2 | • | |
| a,b,d | Var. | 12 (300) | 1½ (40) | 6 (150) | 3 (75) | - - | - - | - - | 6/4½ (150/115) | - - | - - | ⅜ (10) |
| | Var. | 18 (450) | 1½ (40) | 8 (200) | 5 (125) | - - | - - | - - | 8/6 (200/150) | - - | - - | ⅝ (15) |
| | Var. | 24 (600) | 1½ (40) | 10 (250) | 7 (175) | - - | - - | - - | 10/7½ (250/190) | - - | - - | ⅝ (15) |
| | Var. | 30 (750) | 1⅞ (45) | 12 (300) | 9 (225) | - - | - - | - - | 12/9 (400/300) | - - | - - | ¾ (20) |
| c,e | Var. | 24 (600) | 1½ (40) | 6 (150) | - - | - - | 5½ (140) | 4 (100) | 6/4½ (150/115) | - - | 3 (75) | ⅝ (15) |
| | Var. | 30 (750) | 1⅞ (45) | 8 (200) | - - | - - | 7 (175) | 4½ (115) | 8/6 (200/150) | - - | 4 (100) | ¾ (20) |
| | Var. | 36 (900) | 2¼ (60) | 10 (250) | - - | - - | 7½ (190) | 6 (150) | 10/7½ (250/190) | - - | 5 (125) | ¾ (20) |
| | Var. | 42 (1050) | 3 (75) | 12 (300) | - - | - - | 8½ (215) | 7 (175) | 12/9 (400/300) | - - | 6 (150) | 1 (25) |
| f | Var. | 24 (600) | 1½ (40) | 6 (150) | 4 (100) | 4 (100) | - - | - - | 6/4½ (150/115) | 6/4½ (150/115) | - - | ⅝ (15) |
| | Var. | 30 (750) | 1⅞ (45) | 8 (200) | 4½ (115) | 5 (125) | - - | - - | 8/6 (200/150) | 8/6 (200/150) | - - | ¾ (20) |
| | Var. | 42 (1050) | 3 (75) | 10 (250) | 7½ (190) | 7 (175) | - - | - - | 10/7½ (250/190) | 10/7½ (250/190) | - - | 1 (25) |
| | Var. | 48 (1200) | 3 (75) | 12 (300) | 7½ (190) | 8 (200) | - - | - - | 12/9 (400/300) | 12/9 (400/300) | - - | 1 (25) |

• Supplemental Messages

## GENERAL NOTES

All signs shall have a white reflectorized legend and border on a green reflectorized background.

The sign panels shall be mounted as shown on Standard 720001 or as specified in the plans.

All dimensions are in inches (millimeters) unless otherwise shown.

| DATE | REVISIONS |
|---|---|
| 1-1-12 | Revised table and |
| | lettering to upper/lower |
| | case per current MUTCD. |
| 1-1-09 | Switched units to |
| | English (metric). |
| | |

# MAST ARM MOUNTED STREET NAME SIGNS

**STANDARD 720016–03**

Illinois Department of Transportation

APPROVED January 1, 2012
ENGINEER OF OPERATIONS

APPROVED January 1, 2012
ENGINEER OF DESIGN AND ENVIRONMENT

ISSUED 1-1-97

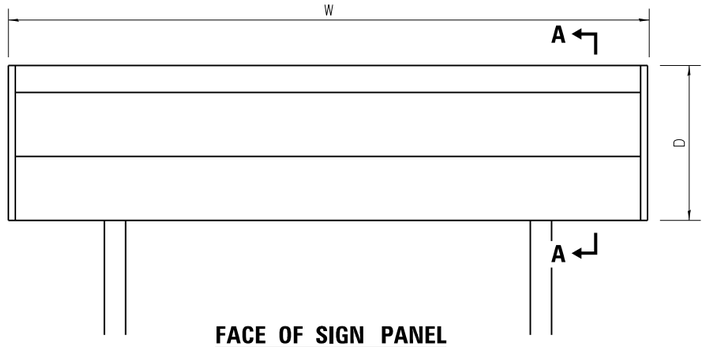


**FACE OF SIGN PANEL**

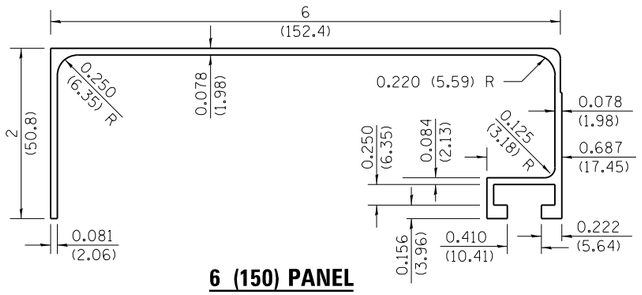


**6 (150) PANEL**

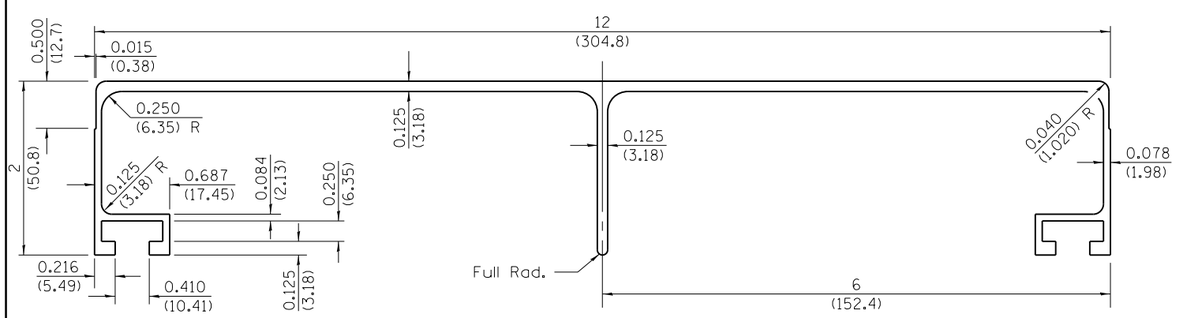


**TYPE B SIGN PANEL**

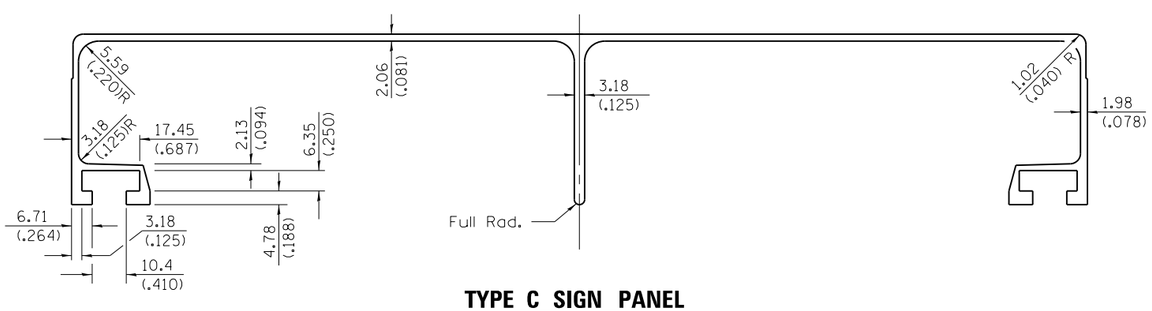


**TYPE C SIGN PANEL**

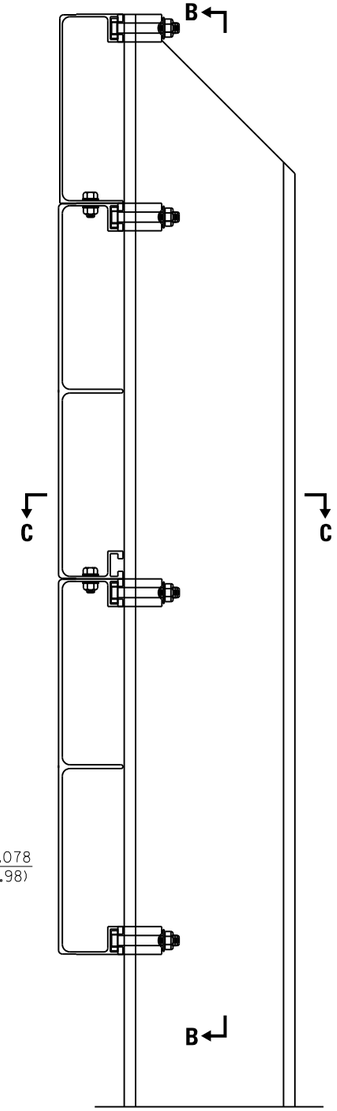


**SECTION A–A**

**SECTION B–B**

(Provide two post clips top and bottom. Alternate at interior panel joints on ground-mounted signs, and provide two clips at all panel joints on over- head mounted signs.)

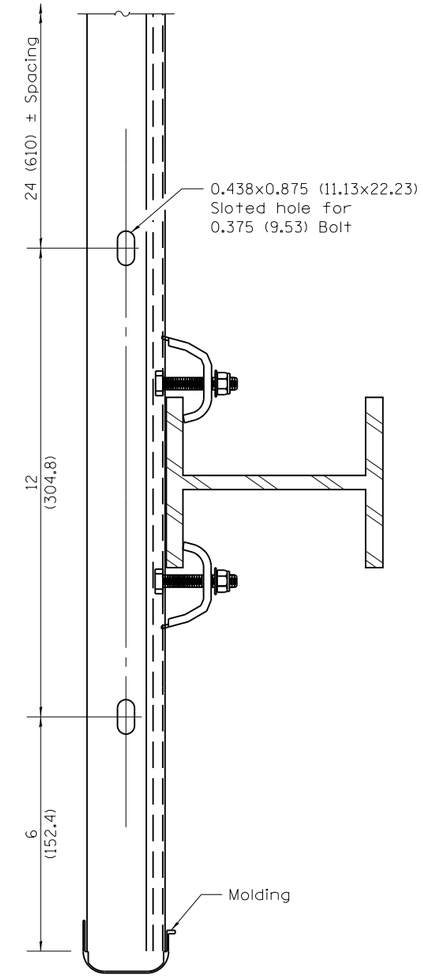


**SECTION C–C**

(w/o panel bolts)

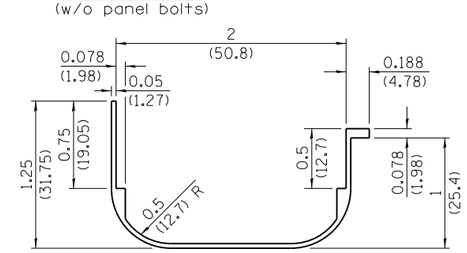


**SIGN MOLDING**

(Color shall match sign facematerial. To be riveted to sign panel at 24 (600) O.C.)

All dimensions are in inches (millimeters) unless otherwise shown.

Illinois Department of Transportation

APPROVED January 1, 2009
ENGINEER OF OPERATIONS

APPROVED January 1, 2009
ENGINEER OF DESIGN AND ENVIRONMENT

ISSUED 1-1-00

| DATE | REVISIONS |
|---|---|
| 1-1-09 | Added alumininum clip. |
| | Switched units to |
| | English (metric). |
| 1-1-03 | Revised stainless steel |
| | clip design, and |
| | minor changes. |

# SIGN PANELS
# EXTRUDED ALUMINUM TYPE

(Sheet 1 of 2)

**STANDARD 720021–02**

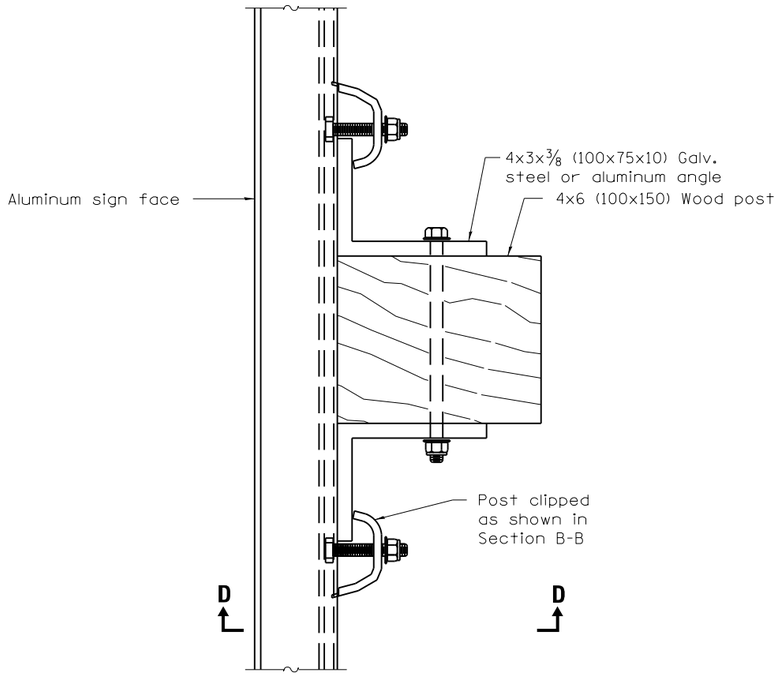


**SIGN PANEL ATTACHMENT TO WOOD POST**

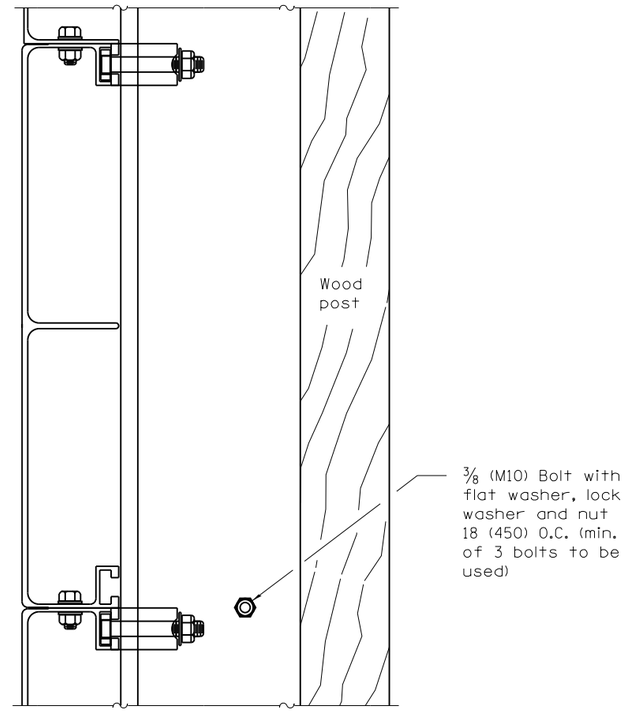


**SECTION D–D**

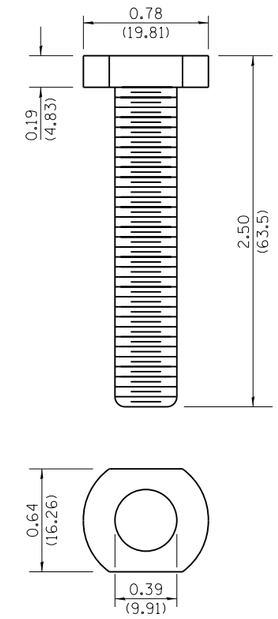


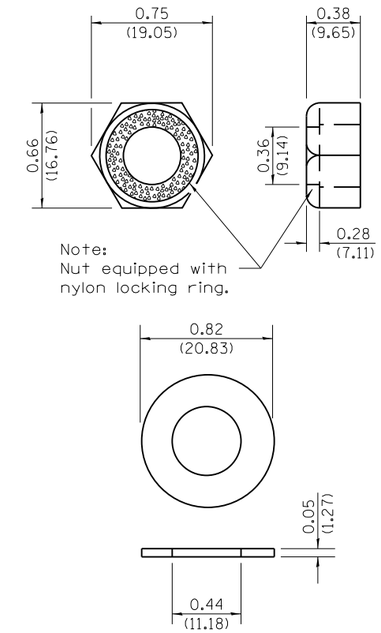


**STAINLESS STEEL CLIP NUT, BOLT AND WASHER ASSEMBLY**

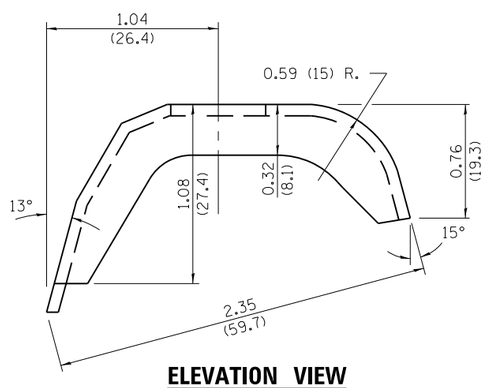


**ELEVATION VIEW**

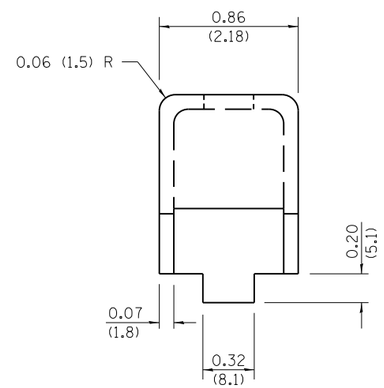


**END VIEW**

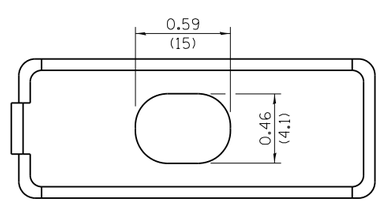


**PLAN VIEW**

**STAINLESS STEEL CLIP**

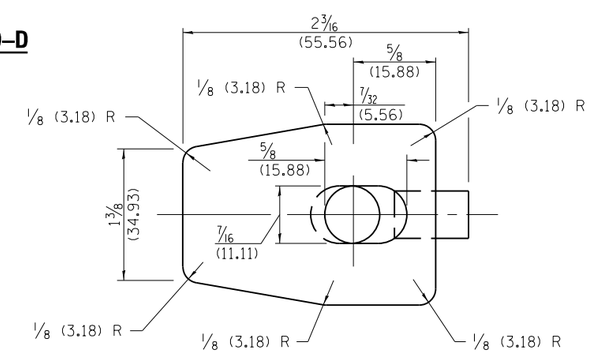


**PLAN VIEW**

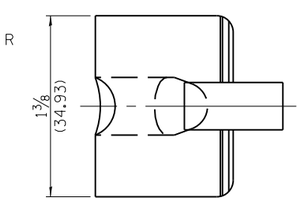


**END VIEW**

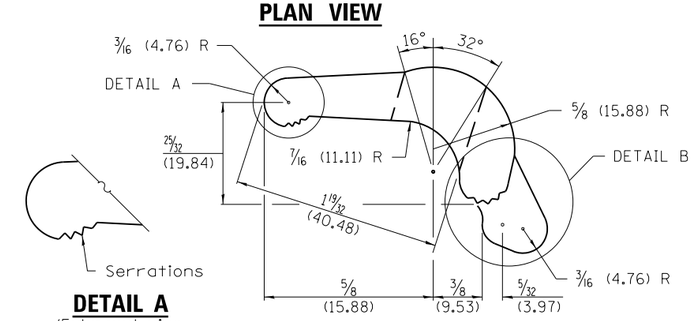


**ELEVATION VIEW**




**DETAIL A**
(Enlarged view of serrations)

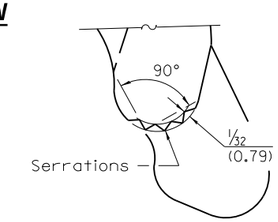


**DETAIL B**
(Enlarged detail of serrations)

**ALUMINUM CLIP**

Illinois Department of Transportation

APPROVED January 1, 2009
ENGINEER OF OPERATIONS

APPROVED January 1, 2009
ENGINEER OF DESIGN AND ENVIRONMENT

ISSUED 1-1-00

# SIGN PANELS EXTRUDED ALUMINUM TYPE

(Sheet 2 of 2)

**STANDARD 720021–02**

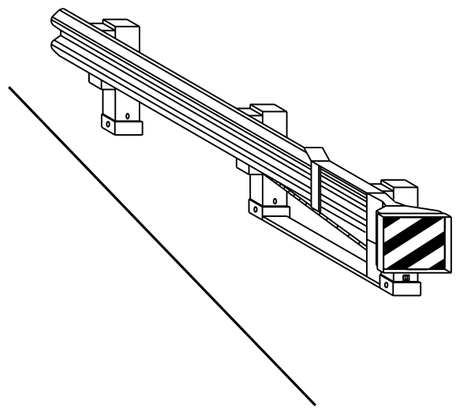

**CASE I**

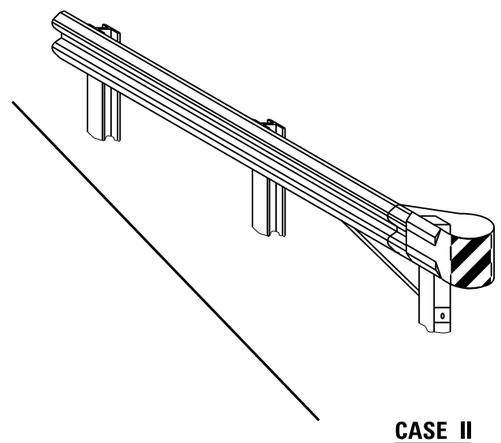

**CASE II**

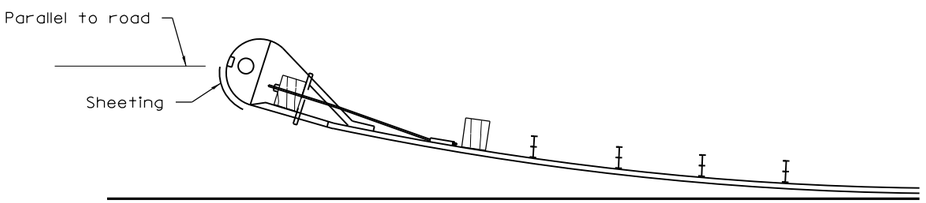


**SHEETING POSITION: CASE II**

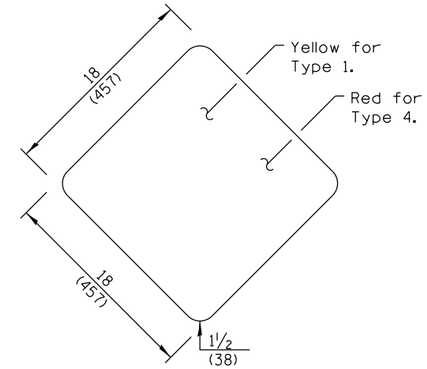


**TYPE 1 OR TYPE 4**

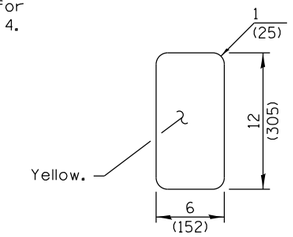


**TYPE 2**

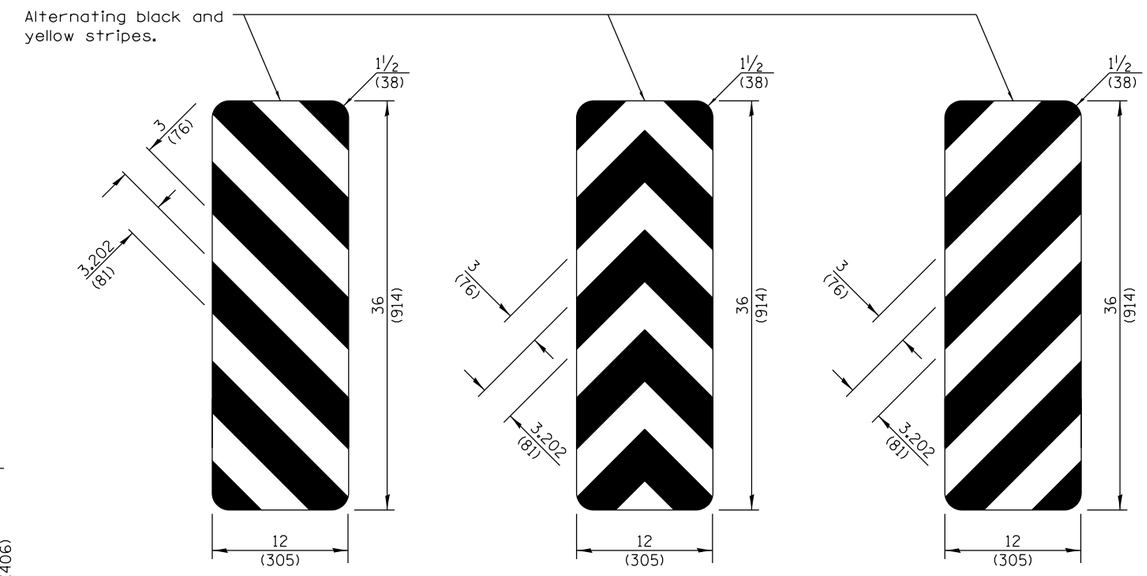


**TYPE 3**

**OBJECT MARKER DETAILS**

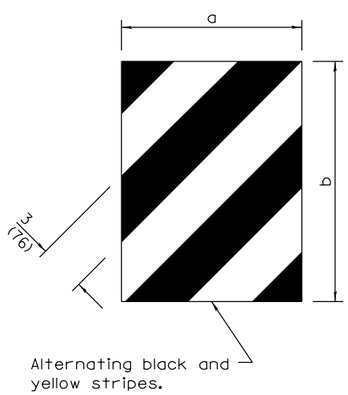


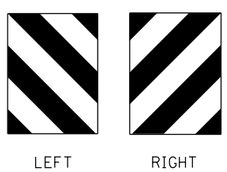


| DIMENSION | CASE I | CASE II |
|---|---|---|
| a | • | 18 (450) |
| b | • | 16 (406) |

**DIRECT APPLIED**

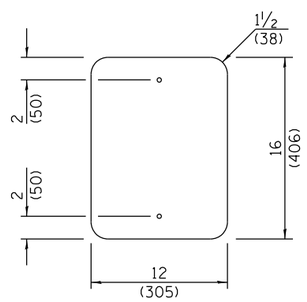


**POST MOUNTED**

**TERMINAL MARKER DETAILS**

Color: Black / Yellow reflectorized

- The width and height (a, b) of the terminal marker shall be within approximately 1 (25) of the outer edge of the terminal end, with a minimum reflective area of 288 sq. in. (0.18 m²).

**GENERAL NOTES**

See detail on Standard 729001 for mounting markers to posts.

All dimensions are in inches (millimeters) unless otherwise shown.

Illinois Department of Transportation

APPROVED April 1, 2016
ENGINEER OF OPERATIONS
APPROVED April 1, 2016
ENGINEER OF DESIGN AND ENVIRONMENT

ISSUED 1-1-2016

| DATE | REVISIONS |
|---|---|
| 4-1-16 | Renumbered standard from |
| | 635006. |
| | |
| 1-1-09 | Switched units to |
| | English (metric). Changed |
| | 'white' to 'crystal' ref. |

# OBJECT AND TERMINAL MARKERS

**STANDARD 725001**

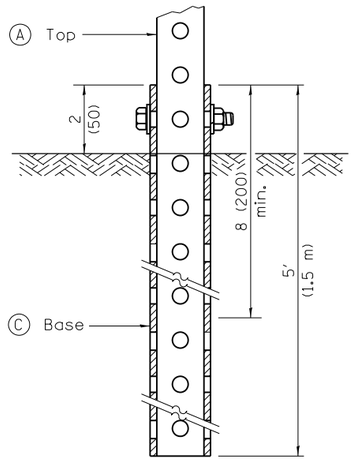


**GROUND MOUNT DETAIL**

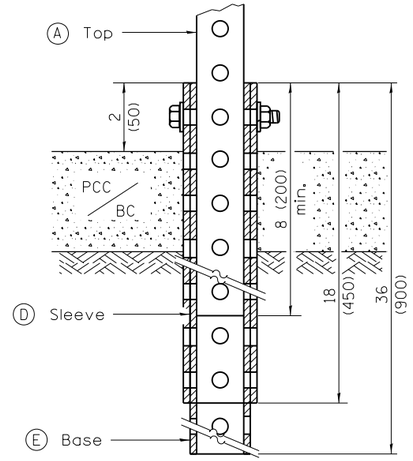


**PAVEMENT MOUNT DETAIL**

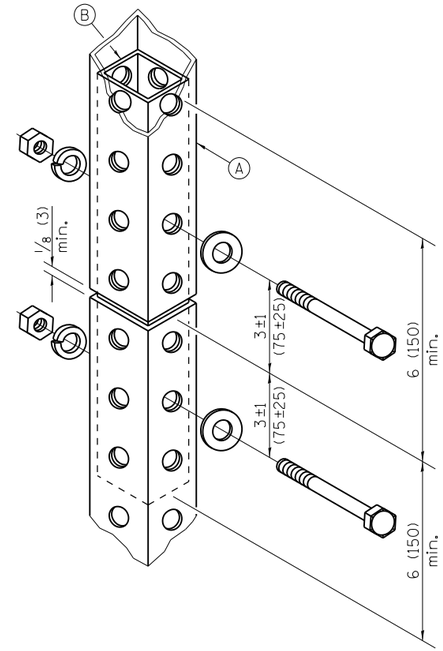


**SPLICE DETAIL**

| | |
|---|---|
| A | 2 x 2 x var. (51 x 51 var.) |
| B | 1¾ x 1¾ x 12 (44 x 44 x 300) |
| C | 2¼ x 2¼ x 60 (57 x 57 x 1500) |
| D | 2½ x 2½ x 18 (64 x 64 x 450) |
| E | 2¼ x 2¼ x 36) (57 x 57 x 900) |

## GENERAL NOTES

All bolts ⅜ (M10) hex head zinc or cadmium plated.

All dimensions are in inches (millimeters) unless otherwise shown.

Illinois Department of Transportation

APPROVED January 1, 2009
ENGINEER OF OPERATIONS

APPROVED January 1, 2009
ENGINEER OF DESIGN AND ENVIRONMENT

ISSUED 1-1-07

| DATE | REVISIONS |
|---|---|
| 1-1-09 | Switched units to |
| | English (metric). |
| | |
| 1-1-07 | New Standard. Used to |
| | be part of Standard |
| | 720006. |

# TELESCOPING STEEL SIGN SUPPORT

**STANDARD 728001–01**

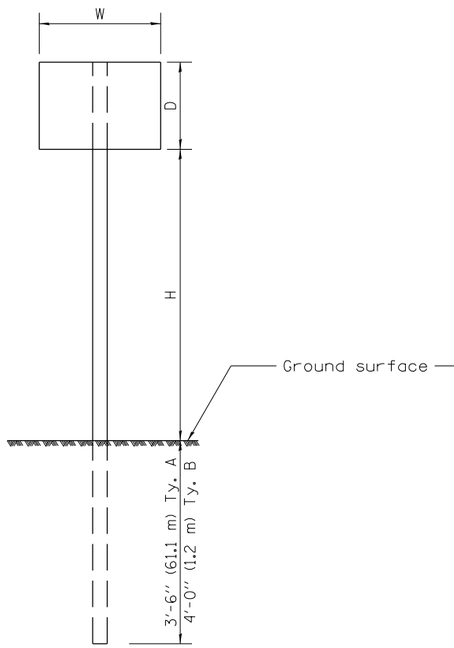


**ONE POST INSTALLATION**

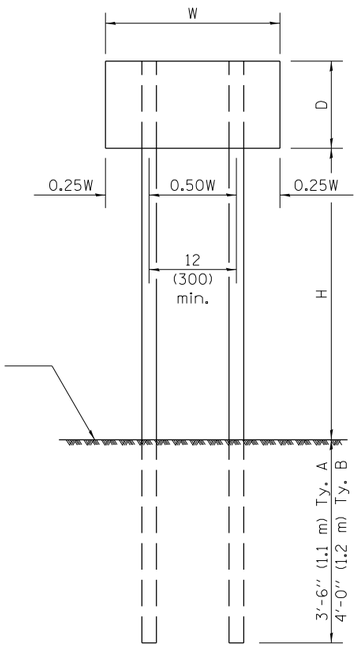


**TWO POST INSTALLATION**

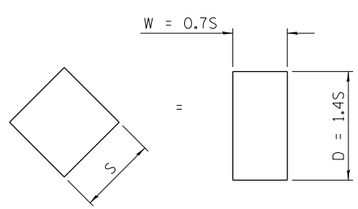


For diamond shaped sign with side S as shown, use required post size for a sign with W = 0.7S and D = 1.4S.

| SIGN DEPTH (D) | H | NO. AND TYPE OF POST FOR SIGN WIDTH (W) | | | | |
|---|---|---|---|---|---|---|
| | | 12 (300) | 18 (450) | 24 (600) | 30 (750) | 36 (900) |
| 18 (450) | 5'-0" (1.5 m) | A | A | A | A | A |
| | 5'-6" (1.7 m) | A | A | A | A | A |
| | 6'-0" (1.8 m) | A | A | A | A | B |
| | 6'-6" (2.0 m) | A | A | A | A | B |
| | 7'-0" (2.1 m) | A | A | A | A | B |
| | 7'-6" (2.3 m) | A | A | A | A | B |
| | 8'-0" (2.4 m) | A | A | A | A | B |
| | 8'-6" (2.6 m) | A | A | A | B | B |
| | 9'-0" (2.7 m) | A | A | A | B | B |
| 24 (600) | 5'-0" (1.5 m) | A | A | A | A | B |
| | 5'-6" (1.7 m) | A | A | A | A | B |
| | 6'-0" (1.8 m) | A | A | A | B | B |
| | 6'-6" (2.0 m) | A | A | A | B | B |
| | 7'-0" (2.1 m) | A | A | A | B | B |
| | 7'-6" (2.3 m) | A | A | A | B | B |
| | 8'-0" (2.4 m) | A | A | A | B | 2A |
| | 8'-6" (2.6 m) | A | A | B | B | 2A |
| | 9'-0" (2.7 m) | A | A | B | B | 2A |
| 30 (750) | 5'-0" (1.5 m) | A | A | A | B | B |
| | 5'-6" (1.7 m) | A | A | A | B | 2A |
| | 6'-0" (1.8 m) | A | A | A | B | 2A |
| | 6'-6" (2.0 m) | A | A | A | B | 2A |
| | 7'-0" (2.1 m) | A | A | B | B | 2A |
| | 7'-6" (2.3 m) | A | A | B | B | 2A |
| | 8'-0" (2.4 m) | A | A | B | B | 2A |
| | 8'-6" (2.6 m) | A | A | B | 2A | 2A |
| | 9'-0" (2.7 m) | A | A | B | 2A | 2A |
| 36 (900) | 5'-0" (1.5 m) | A | A | B | B | 2A |
| | 5'-6" (1.7 m) | A | A | B | B | 2A |
| | 6'-0" (1.8 m) | A | A | B | B | 2A |
| | 6'-6" (2.0 m) | A | A | B | 2A | 2A |
| | 7'-0" (2.1 m) | A | A | B | 2A | 2A |
| | 7'-6" (2.3 m) | A | A | B | 2A | 2A |
| | 8'-0" (2.4 m) | A | B | B | 2A | 2A |
| | 8'-6" (2.6 m) | A | B | B | 2A | 2B |
| | 9'-0" (2.7 m) | A | B | 2A | 2A | 2B |
| 4'-0" (1.2 m) | 5'-0" (1.5 m) | A | A | B | 2A | 2A |
| | 5'-6" (1.7 m) | A | B | B | 2A | 2A |
| | 6'-0" (1.8 m) | A | B | B | 2A | 2A |
| | 6'-6" (2.0 m) | A | B | 2A | 2A | 2B |
| | 7'-0" (2.1 m) | A | B | 2A | 2A | 2B |
| | 7'-6" (2.3 m) | A | B | 2A | 2B | 2B |
| | 8'-0" (2.4 m) | A | B | 2A | 2B | 2B |
| | 8'-6" (2.6 m) | B | B | 2B | 2B | 2B |
| | 9'-0" (2.7 m) | B | 2A | 2B | 2B | 2B |

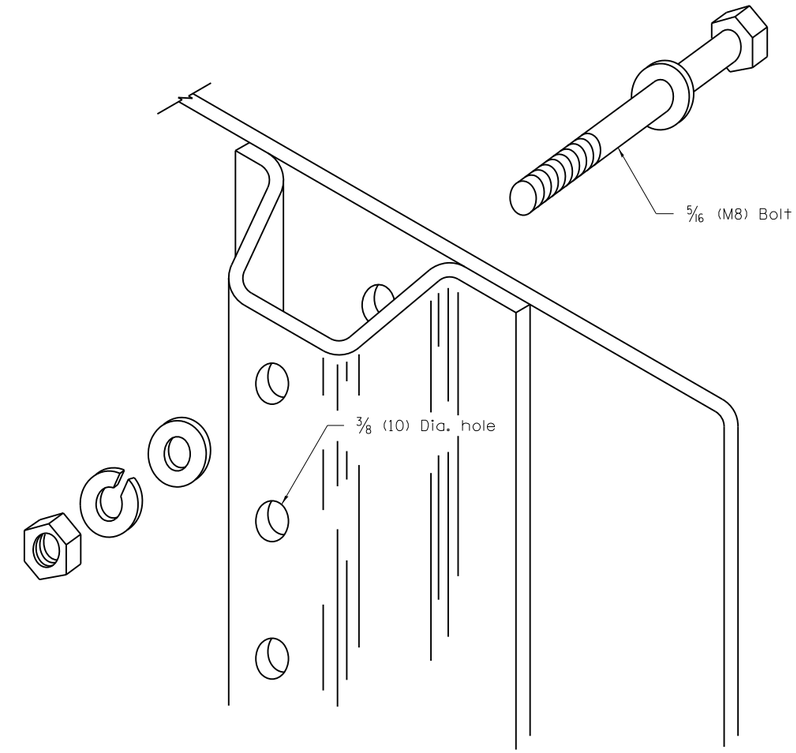


**DETAIL OF MOUNTING SIGN TO POST**

NOTE: Minimum of 2 bolts per post required.

## GENERAL NOTES

DESIGN: Current AASHTO Standard Specifications for Structural Supports for Highway Signs, Luminaires and Traffic Signals.

LOADING: for 60 mph (95 km/h) wind velocity with 30% gust factor, normal to sign.

SOIL PRESSURE: Minimum allowable soil pressure 1.25 tsf (120 kPa).

See Standard 720011 for details of Types A and B posts.

All dimensions are in inches (millimeters) unless otherwise shown.

Illinois Department of Transportation

PASSED January 1, 2009
ENGINEER OF POLICY AND PROCEDURES
APPROVED January 1, 2009
ENGINEER OF DESIGN AND ENVIRONMENT

ISSUED 1-1-97

| DATE | REVISIONS |
|---|---|
| 1-1-09 | Switched units to |
| | English (metric). |
| | |
| 1-1-97 | Renum. Standard 2363-2. |
| | |
| | |

# APPLICATIONS OF TYPES A & B METAL POSTS (FOR SIGNS & MARKERS)

**STANDARD 729001-01**

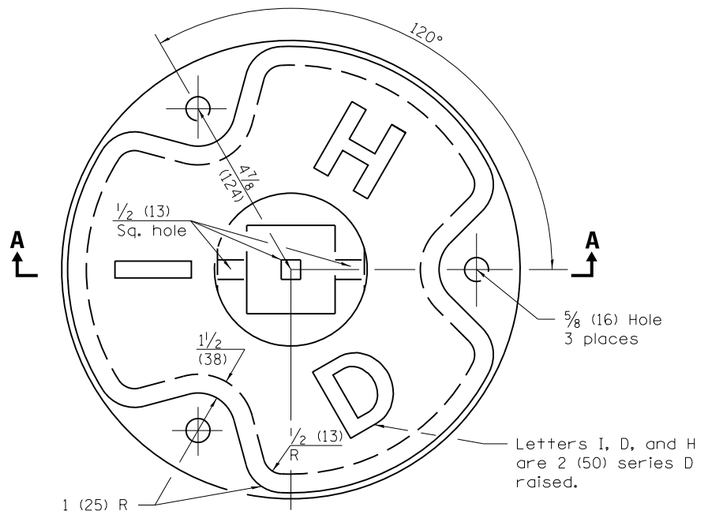


**PLAN**

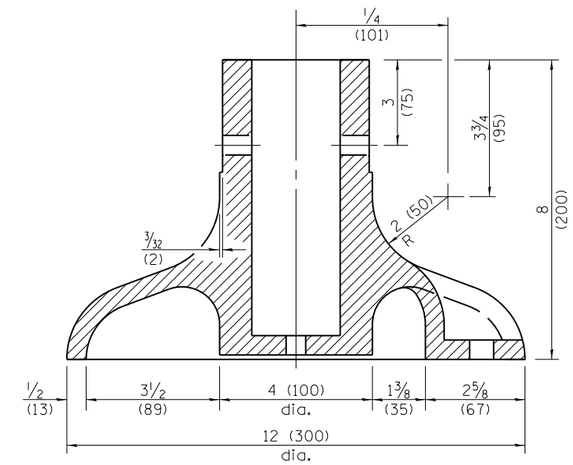


**SECTION A–A**

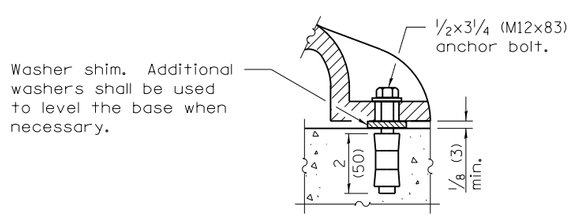


**ANCHOR BOLT DETAIL**

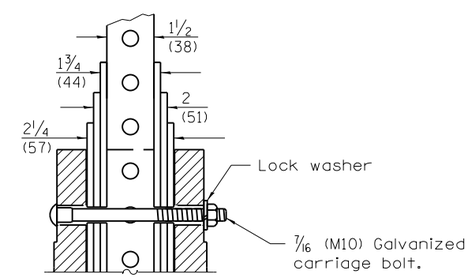


**POST ASSEMBLY DETAIL**

All dimensions are in inches (millimeters) unless otherwise shown.

Illinois Department of Transportation

APPROVED January 1, 2009
ENGINEER OF OPERATIONS

APPROVED January 1, 2009
ENGINEER OF DESIGN AND ENVIRONMENT

ISSUED 1-1-07

| DATE | REVISIONS |
|---|---|
| 1-1-09 | Switched units to |
| | English (metric). |
| | |
| 1-1-07 | New Standard. Used to |
| | be part of Standard |
| | 720006. |

# BASE FOR TELESCOPING STEEL SIGN SUPPORT

**STANDARD 731001–01**

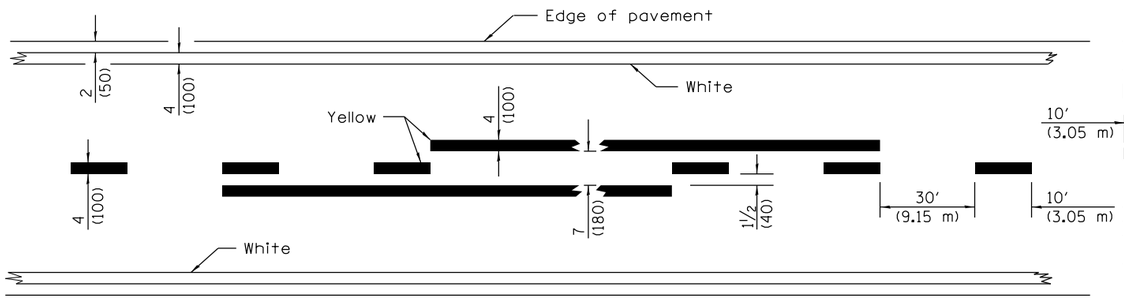


## 2 LANE

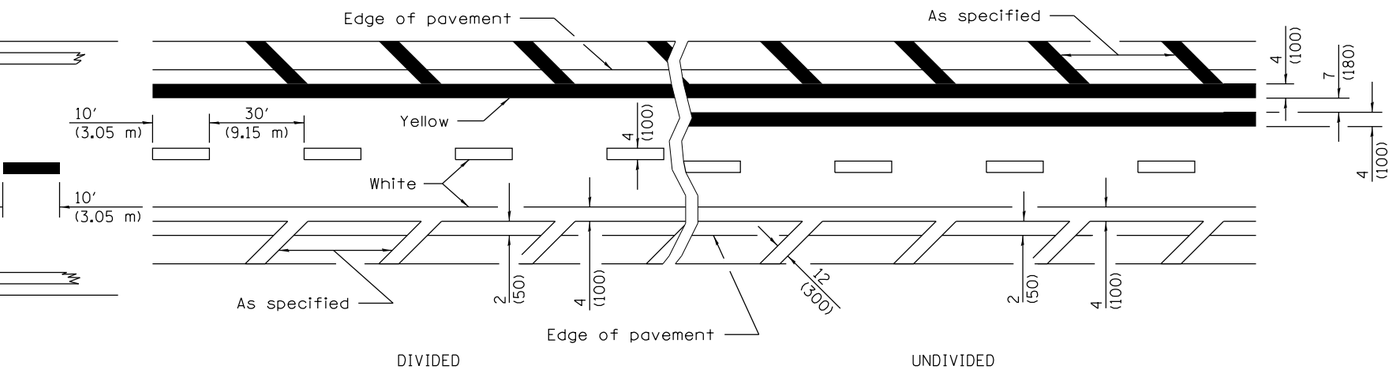


## MULTI LANE

## LANE AND EDGE LINES

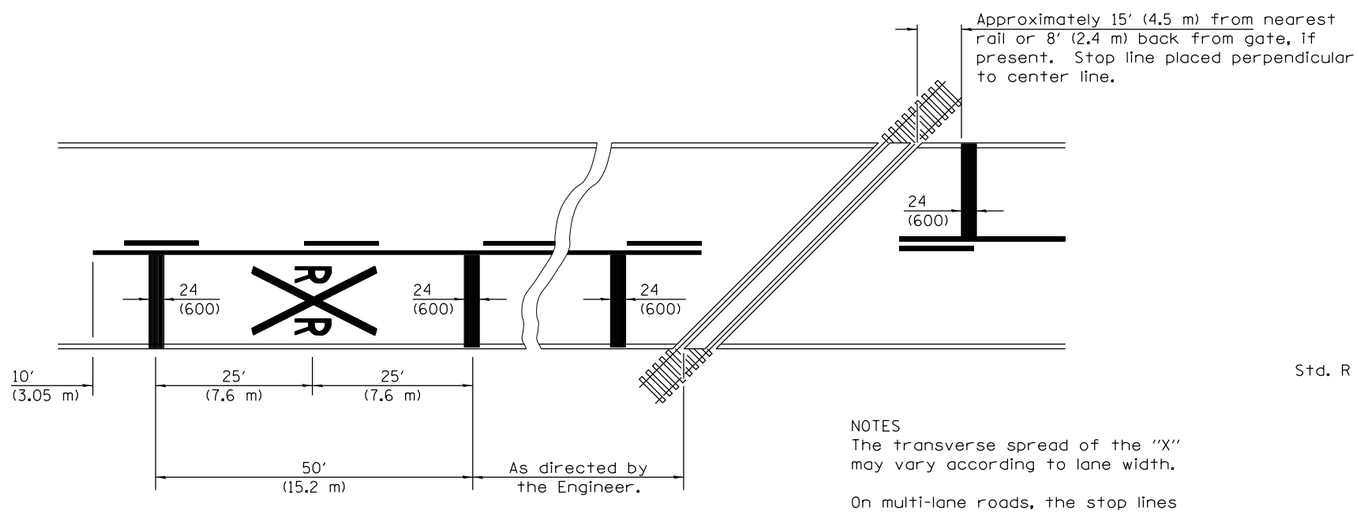


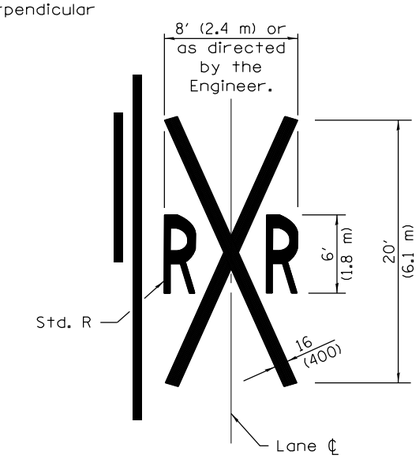


NOTES
The transverse spread of the "X" may vary according to lane width.

On multi-lane roads, the stop lines shall extend across all approach lanes and separate RXR symbols shall be placed adjacent to each other in each lane.

When the pavement marking symbol is used, a portion of the symbol should be located directly adjacent to the Advance Warning Sign (W10-1) as placed by Table 2C-4, Condition B of the MUTCD.

## PAVEMENT MARKINGS AT RAILROAD–HIGHWAY GRADE CROSSING

All dimensions are in inches (millimeters) unless otherwise shown.

Illinois Department of Transportation

APPROVED January 1, 2015
ENGINEER OF OPERATIONS
APPROVED January 1, 2015
ENGINEER OF DESIGN AND ENVIRONMENT

ISSUED 1-1-97

| DATE | REVISIONS |
|---|---|
| 1-1-15 | Added symbols. Revised |
| | bike symbol. Revised note |
| | for stop line at RR crossing. |
| 1-1-14 | Added bike symbol. Renamed |
| | 'LANE DROP ARROW' detail to |
| | 'LANE-REDUCTION ARROW'. |

# TYPICAL PAVEMENT MARKINGS

(Sheet 1 of 3)

**STANDARD 780001–05**

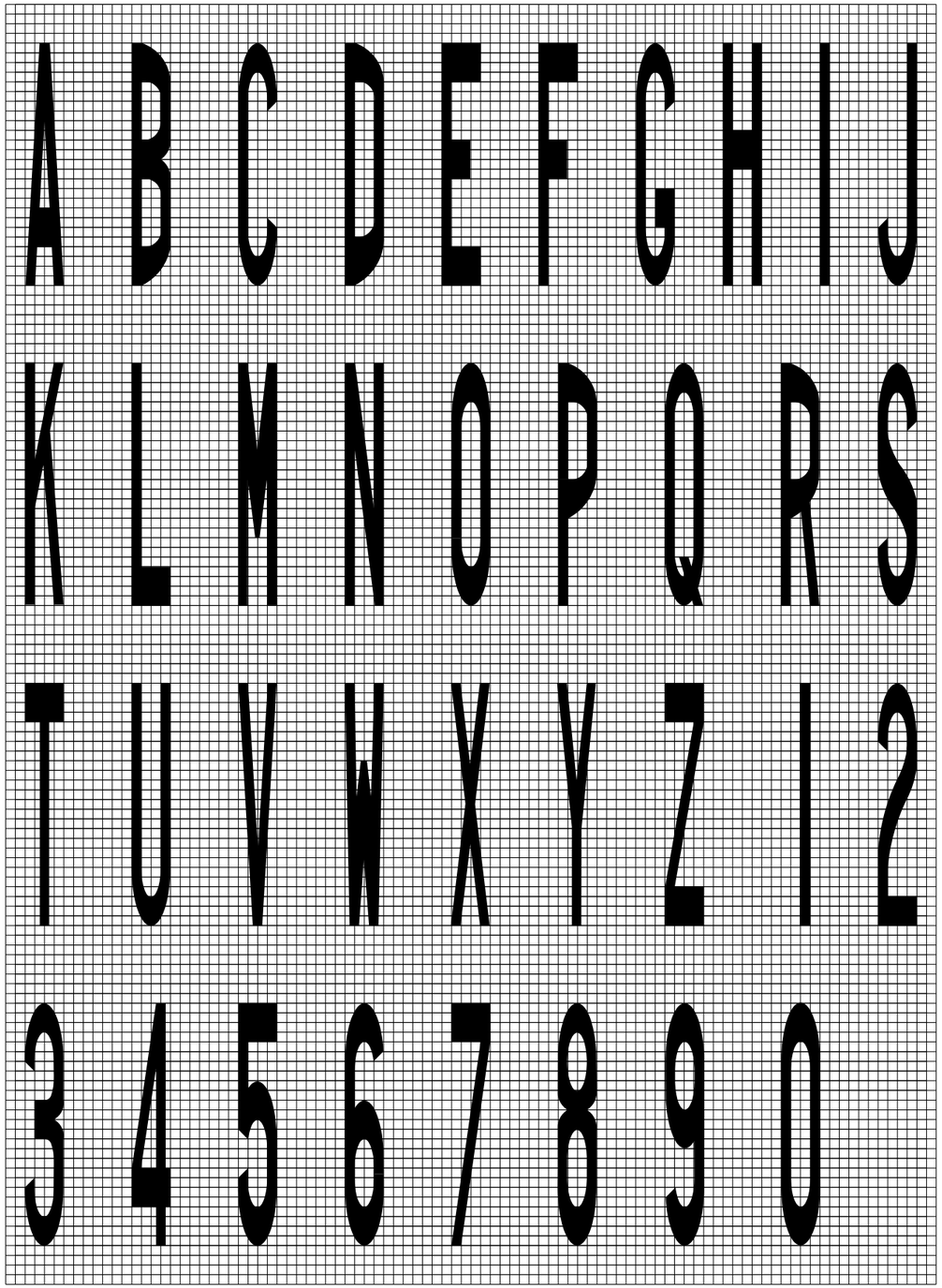


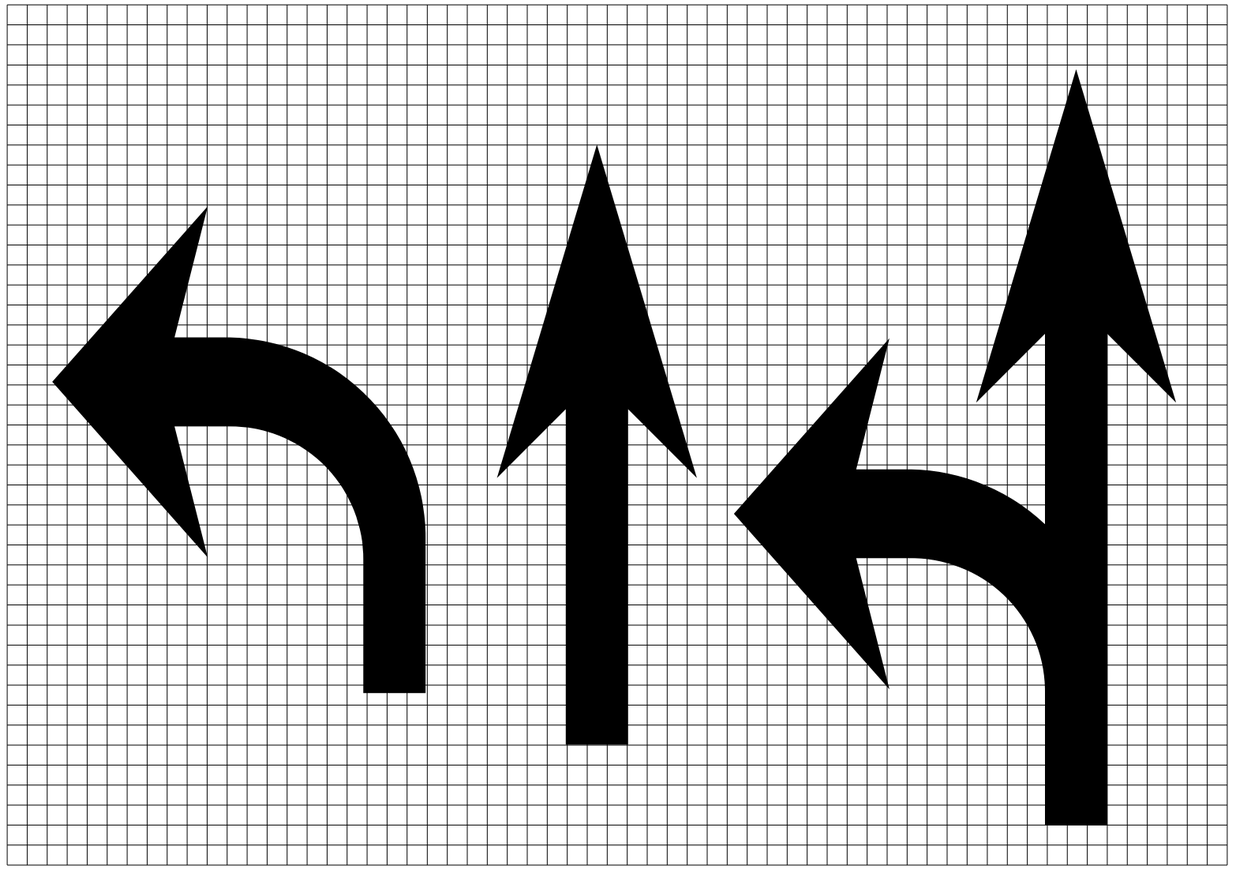

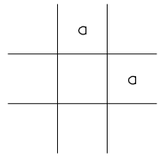


| Legend Height | Arrow Size | a |
|---|---|---|
| 6′ (1.8 m) | Small | 2.9 (74) |
| 8′ (2.4 m) | Large | 3.8 (96) |

The space between adjacent letters or numerals should be approximately 3 (75) for 6′ (1.8 m) legend and 4 (100) for 8′ (2.4 m) legend.

**LETTER AND ARROW GRID SCALE**

Illinois Department of Transportation

APPROVED January 1, 2015
ENGINEER OF OPERATIONS
APPROVED January 1, 2015
ENGINEER OF DESIGN AND ENVIRONMENT

ISSUED 1-1-97

# TYPICAL PAVEMENT MARKINGS

(Sheet 2 of 3)

**STANDARD 780001–05**

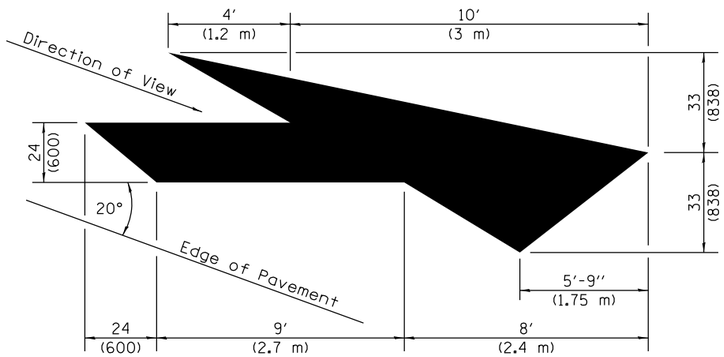


**LANE-REDUCTION ARROW**

Right lane-reduction arrow shown.
Use mirror image for left lane.

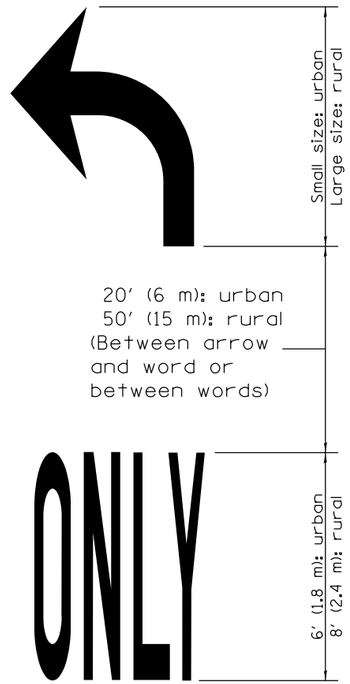


**WORD AND ARROW LAYOUT**

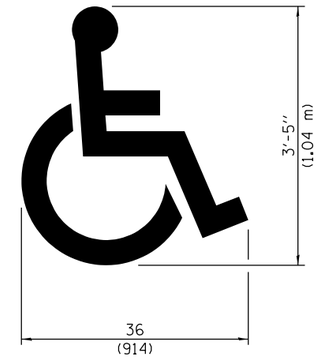


**INTERNATIONAL SYMBOL OF ACCESSILITY**

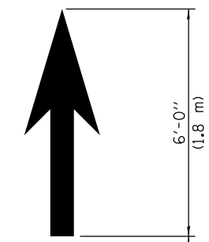


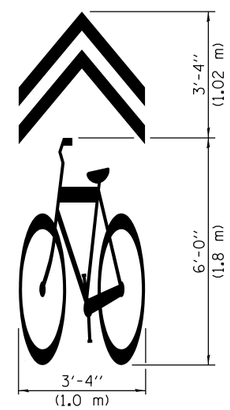


**SHARED LANE SYMBOL**

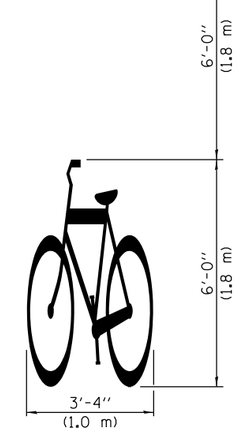


**BIKE SYMBOL**

(Arrow is optional.)

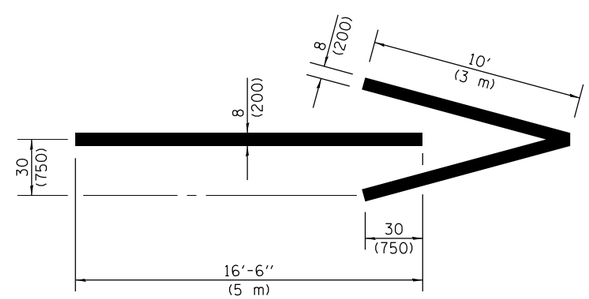


**WRONG WAY ARROW**

Illinois Department of Transportation

APPROVED January 1, 2015
ENGINEER OF OPERATIONS
APPROVED January 1, 2015
ENGINEER OF DESIGN AND ENVIRONMENT

ISSUED 1-1-97

# TYPICAL PAVEMENT MARKINGS

(Sheet 3 of 3)

**STANDARD 780001–05**

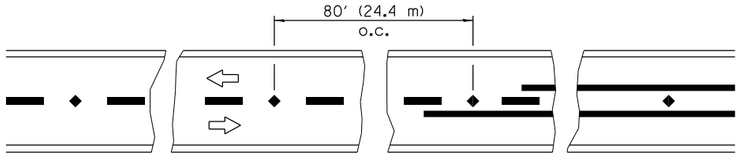


Reduce to 40′ (12.2 m) o.c. on curves with posted or advisory speeds of 45 mph (70 km/h) or less.

## TWO–LANE /TWO–WAY

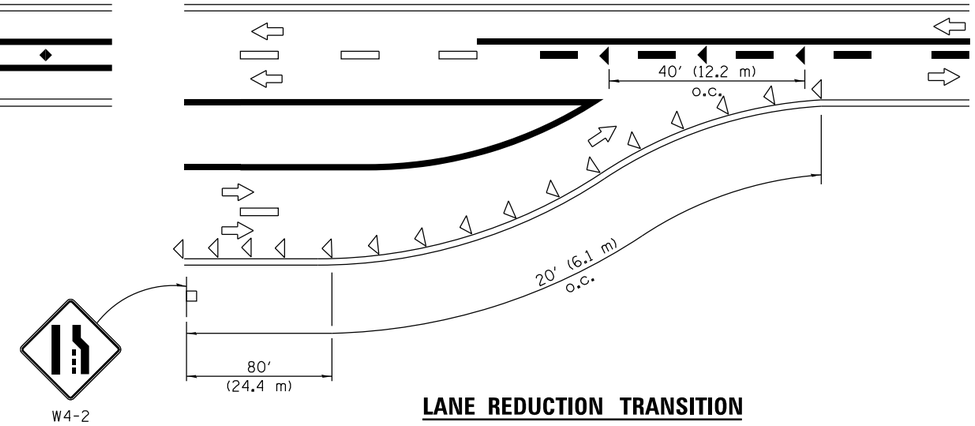


## LANE REDUCTION TRANSITION

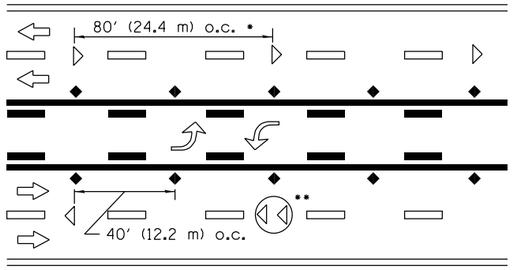


•,•• See MULTI LANE DIVIDED detail for lane marker notes.

## TWO–WAY LEFT TURN

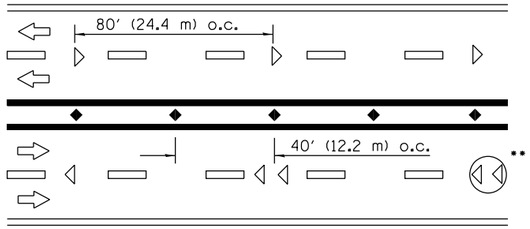


•,•• See MULTI LANE DIVIDED detail for lane marker notes.

## MULTI–LANE UNDIVIDED

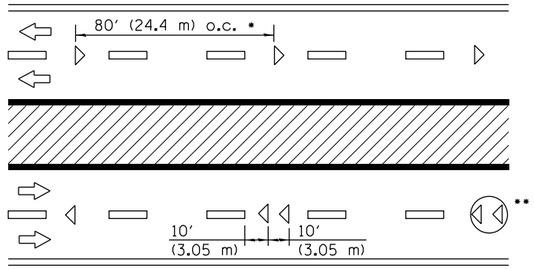


• Reduce to 40′ (12.2 m) o.c. on curves where advisory speeds are 10 mph (15 km/h) lower than posted speeds.

•• Where double lane line markers are specified, they shall be spaced as shown.

## MULTI–LANE DIVIDED

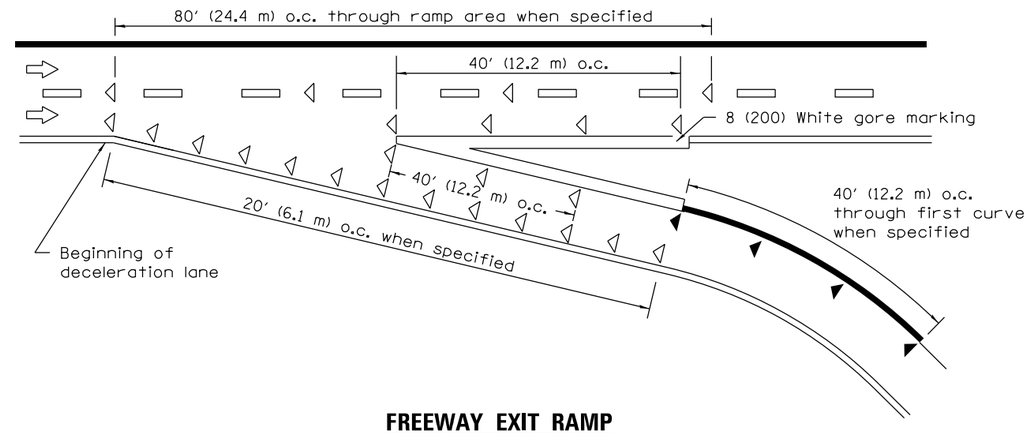


## FREEWAY EXIT RAMP

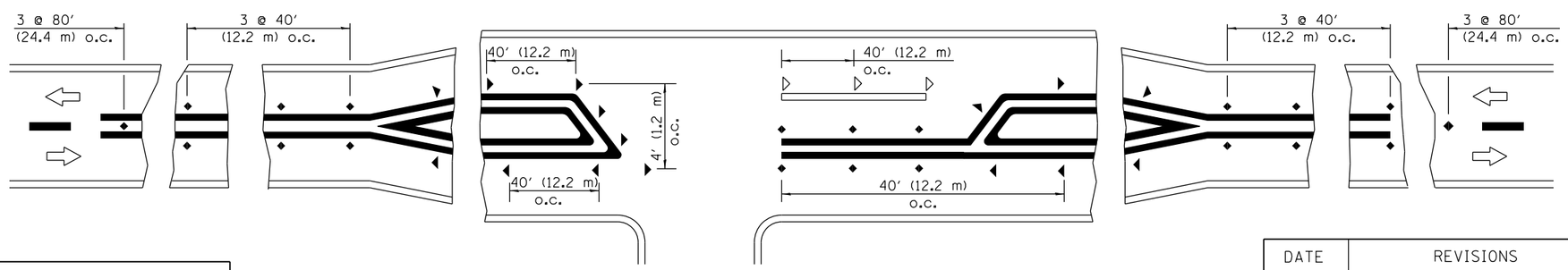


## RURAL LEFT TURN

## SYMBOLS

- Yellow stripe
- White stripe
- One-way amber marker
- One-way crystal marker
- Two-way amber marker

All dimensions are in inches (millimeters) unless otherwise shown.

Illinois Department of Transportation

APPROVED April 1, 2016
ENGINEER OF OPERATIONS

APPROVED April 1, 2016
ENGINEER OF DESIGN AND ENVIRONMENT

ISSUED 1-1-97

| DATE | REVISIONS |
|---|---|
| 4-1-16 | Revised LANE ENDS sign |
| | W4-2 to agree with current |
| | MUTCD. |
| 1-1-09 | Switched units to |
| | English (metric). |
| | |

# TYPICAL APPLICATIONS RAISED REFLECTIVE PAVEMENT MARKERS

STANDARD 781001–04

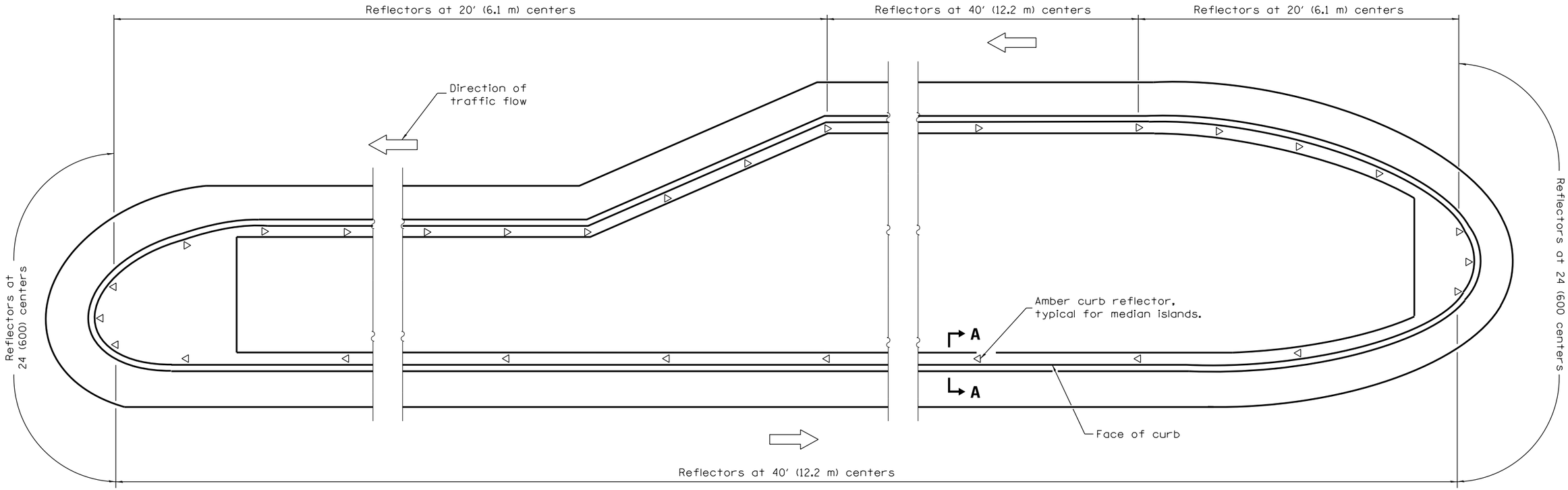


**MEDIAN ISLAND**

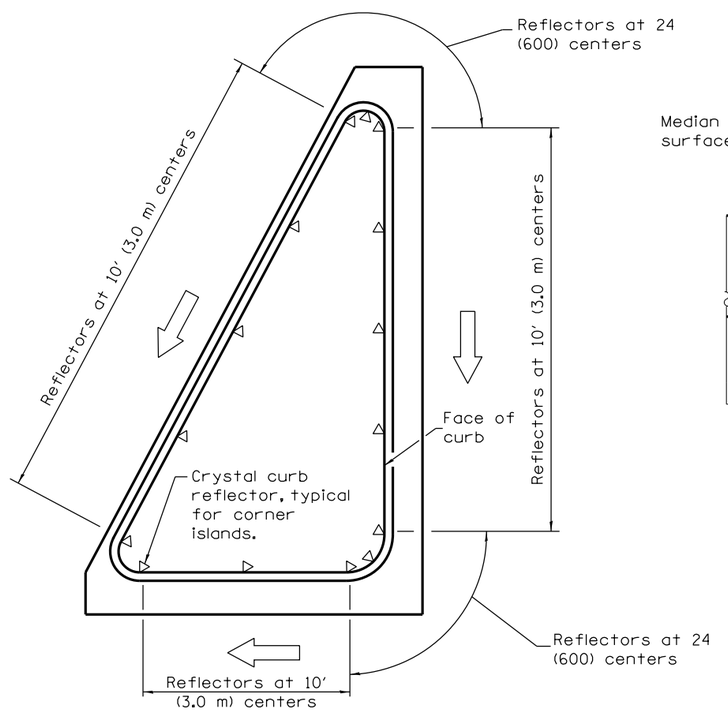


**CORNER ISLAND**

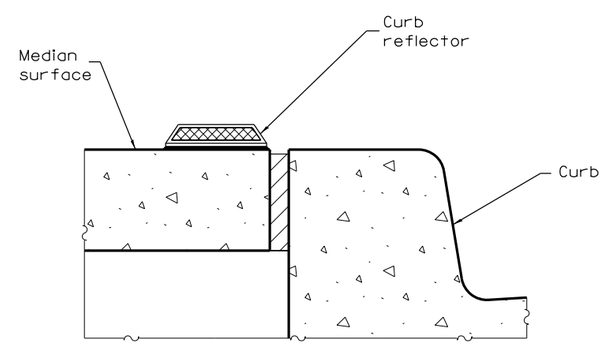


**SECTION A–A**

(Similar for corner islands.)

## GENERAL NOTES

Curb reflectors shall be monodirectional and oriented with the reflective face toward approaching traffic.

All dimensions are in inches (millimeters) unless otherwise shown.

Illinois Department of Transportation

PASSED April 1, 2016
ENGINEER OF OPERATIONS

APPROVED April 1, 2016
ENGINEER OF DESIGN AND ENVIRONMENT

ISSUED 1-1-97

| DATE | REVISIONS |
|---|---|
| 4-1-16 | Revised title and removed |
| | work 'prismatic'. |
| | |
| 1-1-12 | New standard. |
| | |
| | |

# CURB REFLECTORS

**STANDARD 782001–01**

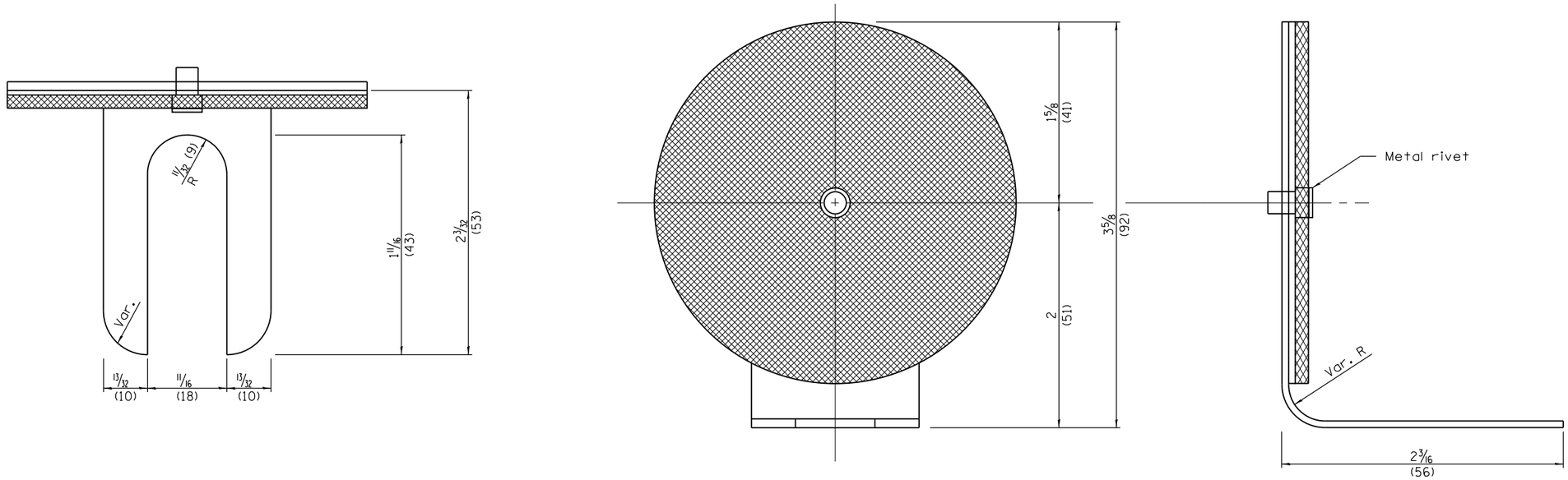


**REFLECTOR TYPE A**
(monodirectional shown)

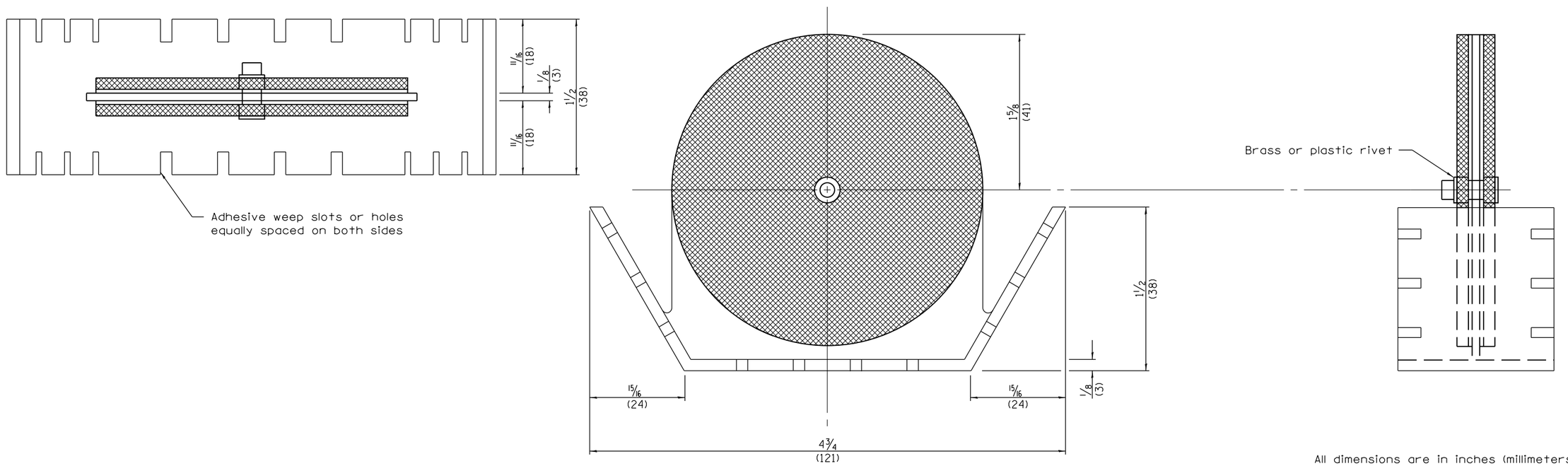


**REFLECTOR TYPE B**
(bidirectional shown)

All dimensions are in inches (millimeters) unless otherwise shown.

Illinois Department of Transportation

APPROVED April 1. 2016
ENGINEER OF OPERATIONS
APPROVED April 1. 2016
ENGINEER OF DESIGN AND ENVIRONMENT

ISSUED 1-1-2000

| DATE | REVISIONS |
|---|---|
| 4-1-16 | Added reflector spacing |
| | detail. Moved TERMINAL |
| | MARKER to std. 725001. |
| 1-1-09 | Switched units to |
| | English (metric). |
| | |

# GUARDRAIL AND BARRIER WALL REFLECTOR MOUNTING DETAILS

(Sheet 1 of 3)

**STANDARD 782006**

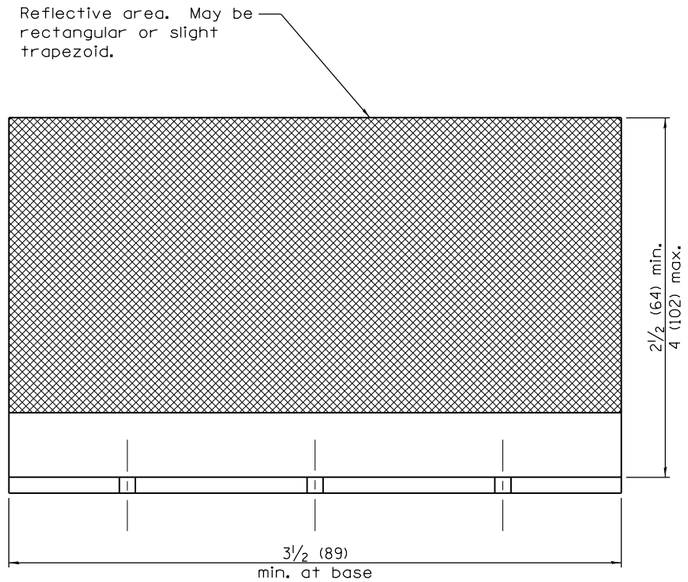


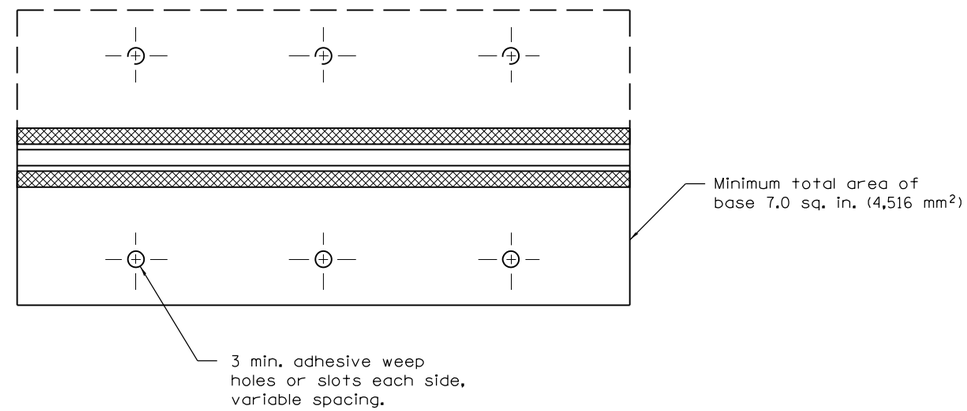


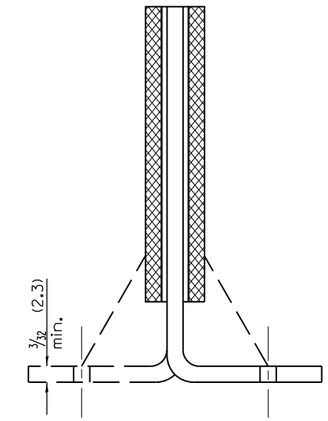


Cross section may be "T" or "L" shaped and may have side supports at ends.

**REFLECTOR TYPE C**

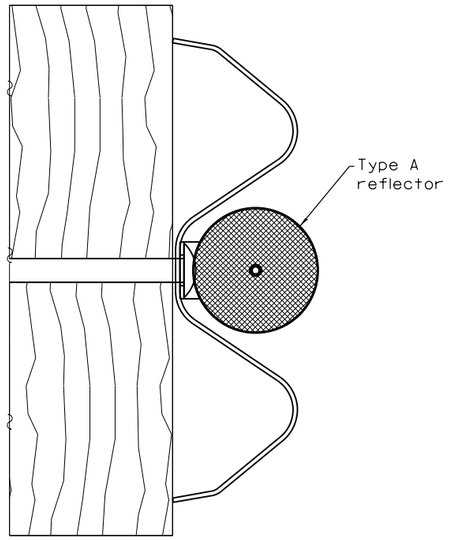


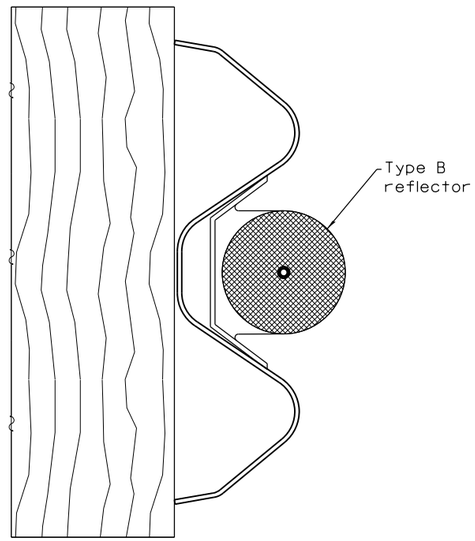


**TYPICAL MOUNTING DETAIL FOR GUARDRAIL REFLECTOR**

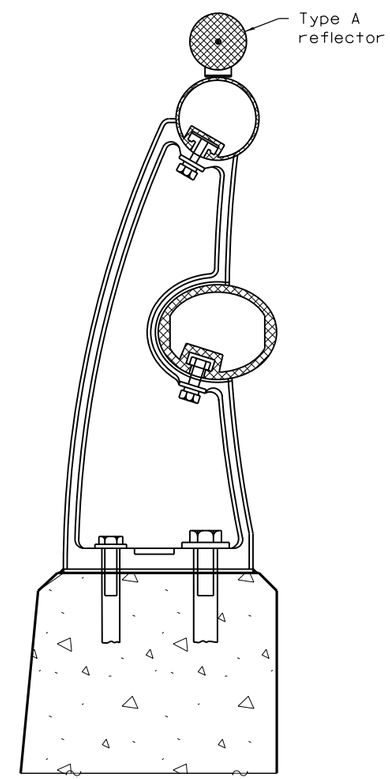


**TYPICAL MOUNTING DETAIL FOR BRIDGE RAIL REFLECTOR**

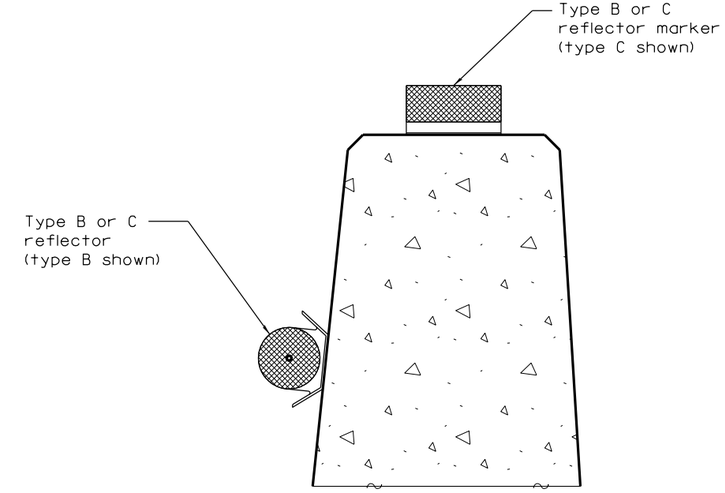


**TYPICAL MOUNTING DETAIL FOR BARRIER WALL REFLECTOR**

Illinois Department of Transportation

APPROVED April 1, 2016
ENGINEER OF OPERATIONS

APPROVED April 1, 2016
ENGINEER OF DESIGN AND ENVIRONMENT

ISSUED 1-1-2000

# GUARDRAIL AND BARRIER WALL REFLECTOR MOUNTING DETAILS

(Sheet 2 of 3)

**STANDARD 782006**

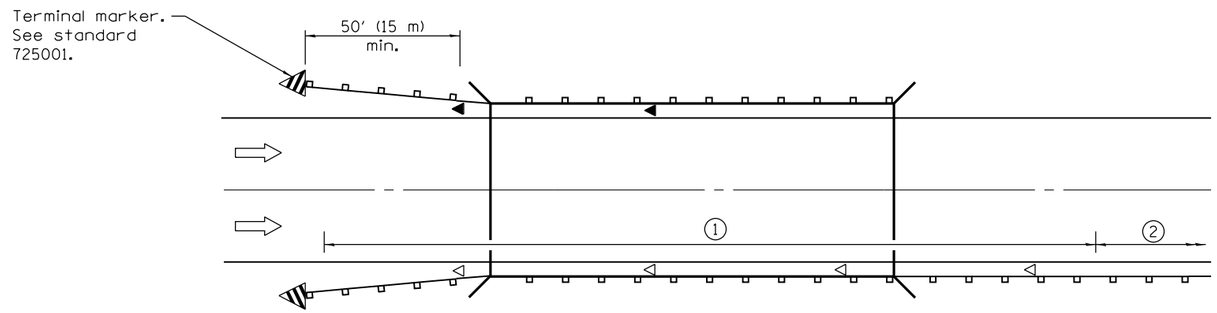


1 Spacing 80 ft. (24 m) max. for first 400 ft. (122 m) or curve spacing shown in Standard 635001, whichever is less (min. 4 reflectors regardless of length).

2 After 400 ft. (122 m), transition to normal delineator spacing shown in Standard 635001, and continue as required.

ONE-WAY TRAFFIC

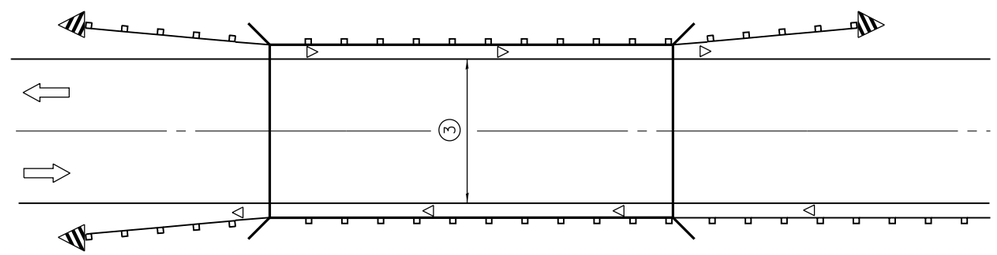


3 Bidirectional silver/silver should be used in lieu of monodirectional silver on both sides of two-lane bridges where the pavement is less than 24 (610) wider than the pavement approaching the bridge.

◁ Monodirectional crystal

◀ Monodirectional amber

TWO-WAY TRAFFIC

**GUARDRAIL /BARRIER WALL**
**REFLECTIOR PLACEMENT DETAIL**

Illinois Department of Transportation

APPROVED April 1, 2016
ENGINEER OF OPERATIONS

APPROVED April 1, 2016
ENGINEER OF DESIGN AND ENVIRONMENT

ISSUED 1-1-2000

# GUARDRAIL AND BARRIER WALL REFLECTOR MOUNTING DETAILS

(Sheet 3 of 3)

**STANDARD 782006**

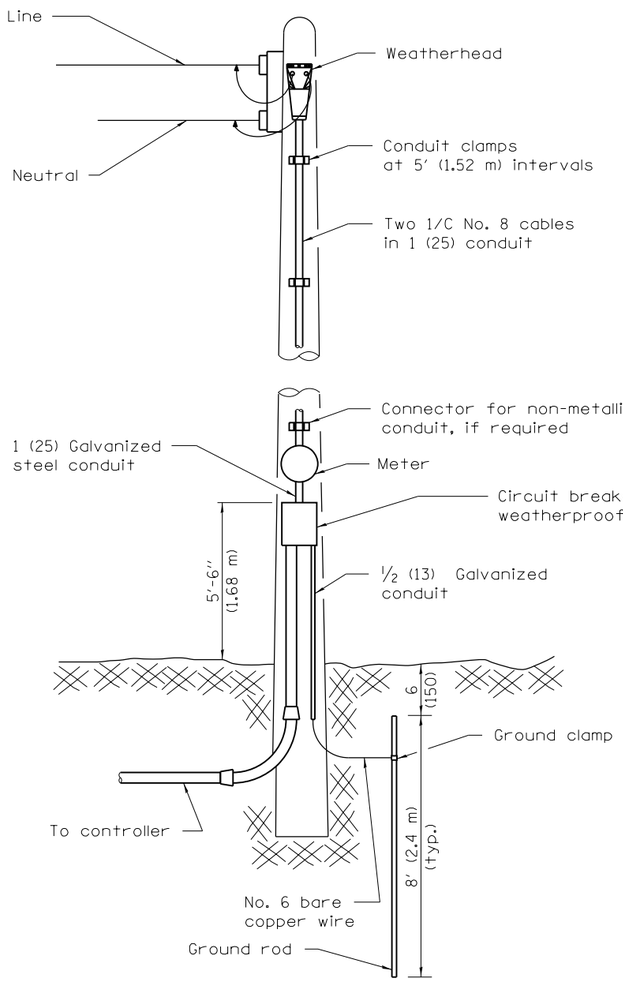


**TYPE A**

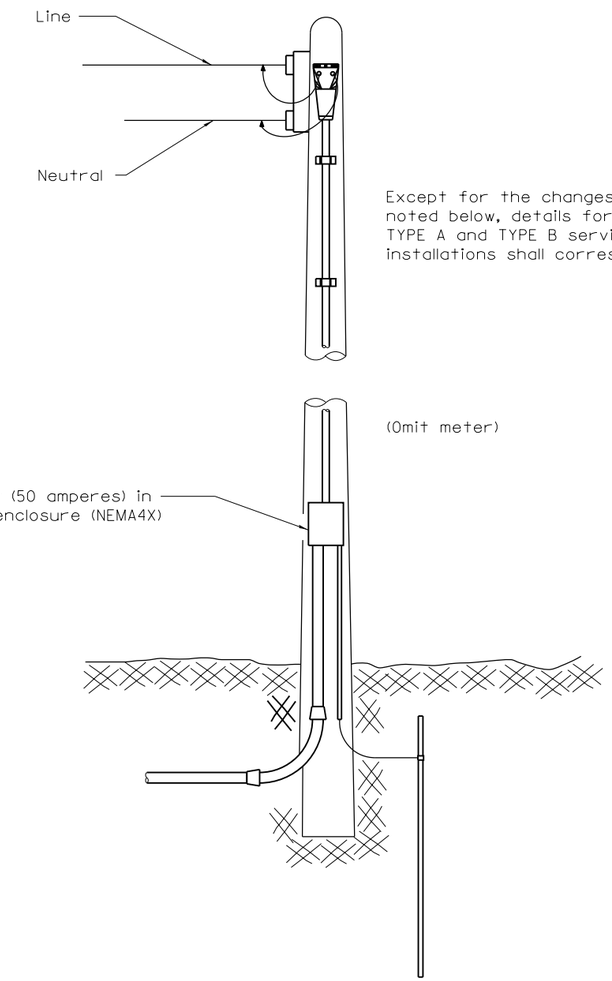


**TYPE B**

Except for the changes noted below, details for TYPE A and TYPE B service installations shall correspond.

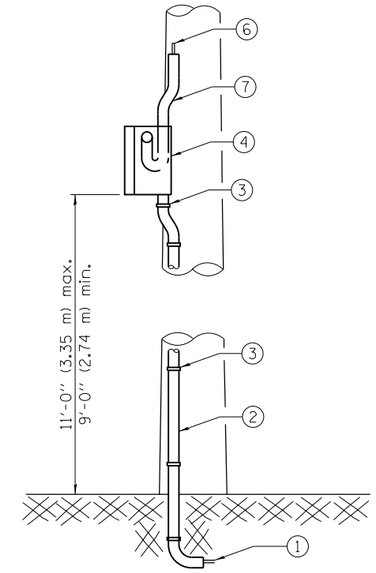


**TYPE C**

The following equipment is to be furnished and installed on the TYPE C installation.

1. Cable in conduit (electric cable, No. 6, 2/C except where otherwise specified)
2. Galvanized steel conduit 1¼ (32) with bend
3. Galvanized conduit clamps
4. Aluminum weatherproof box with gasketed cover. Weatherproof box shall be installed facing the adjacent property line. (See diagram for alternate installation.)
5. Ground stud for neutral connection
6. Service cables
7. Offset weatherproof fitting
8. Circuit breaker

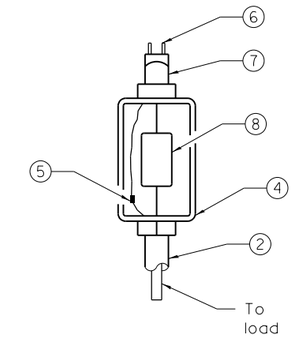


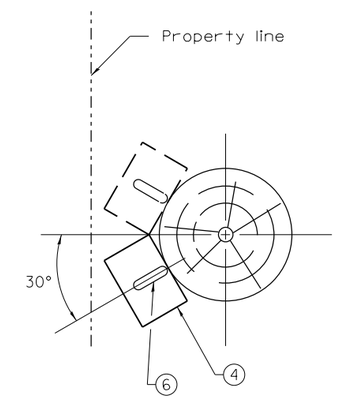


**ALTERNATE INSTALLATION**

(Installation when weatherproof box cannot be installed facing the adjacent property line.)

All dimensions are in inches (millimeters) unless otherwise shown.

| DATE | REVISIONS |
|---|---|
| 1-1-09 | Switched units to |
| | English (metric). |
| | |
| 1-1-02 | Renum. Standard 2373-1. |
| | |
| | |

# ELECTRICAL SERVICE INSTALLATION DETAILS

**STANDARD 805001–01**

Illinois Department of Transportation

APPROVED January 1, 2009
ENGINEER OF OPERATIONS

APPROVED January 1, 2009
ENGINEER OF DESIGN AND ENVIRONMENT

ISSUED 1-1-02

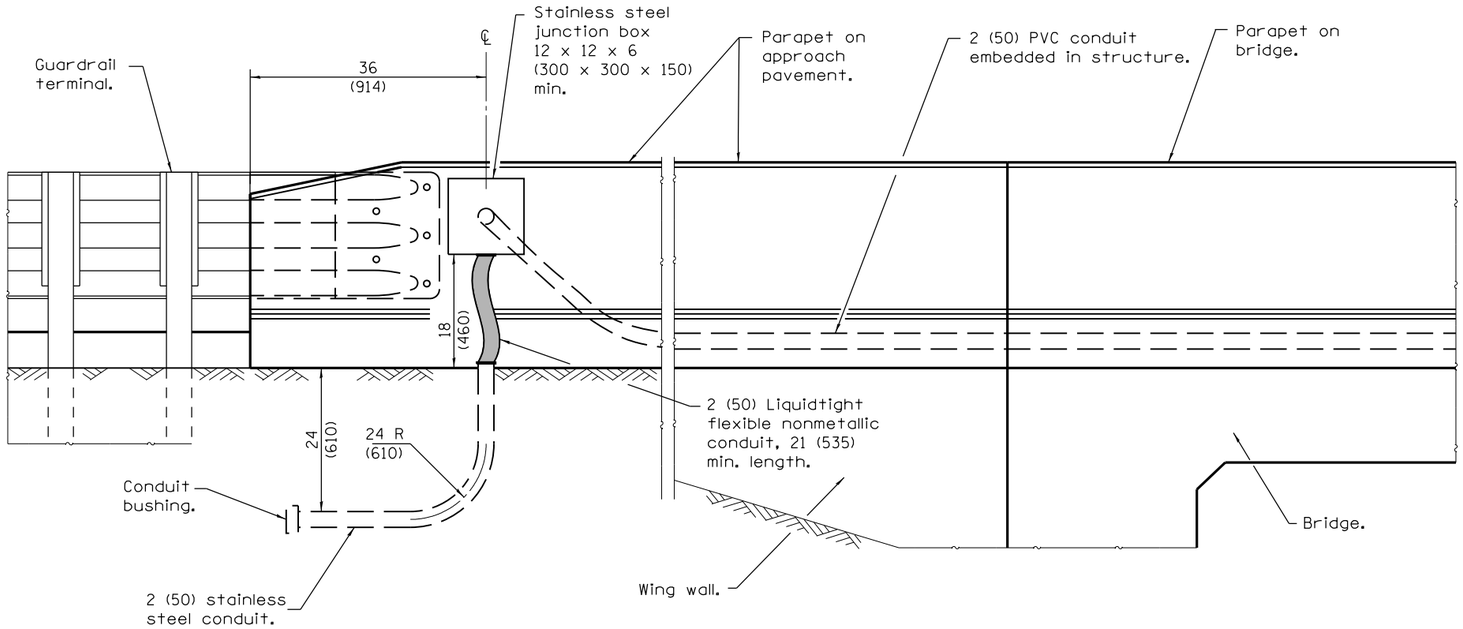


**INTEGRAL/SEMI-INTEGRAL ABUTMENT WITH PARAPET ON APPROACH PAVEMENT**

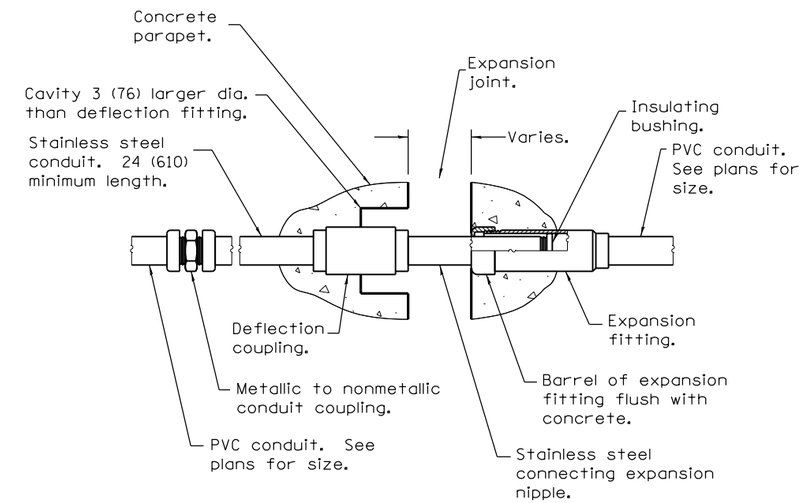


**COMBINATION EXPANSION/DEFLECTION FITTING**

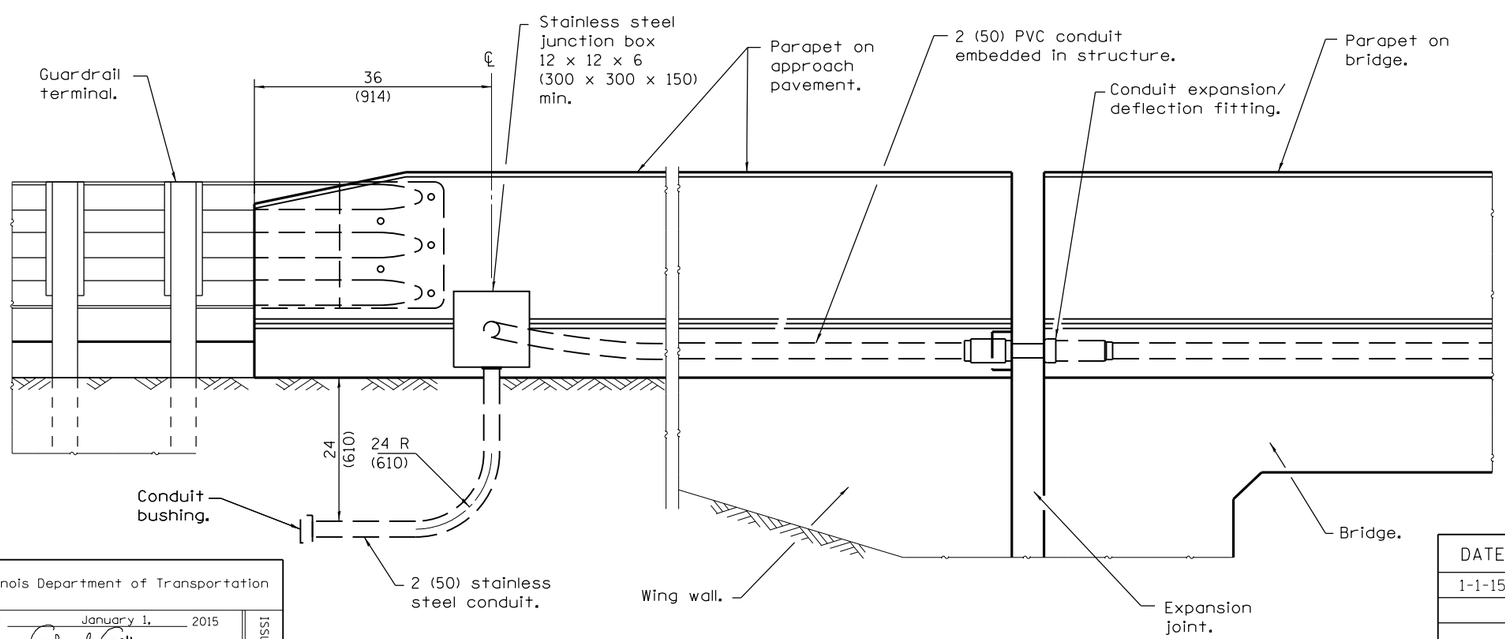


**JOINTED ABUTMENT WITH PARAPET ON APPROACH PAVEMENT**

## GENERAL NOTES

The barrel in the expansion fitting shall be fully embedded in the concrete on one side of the expansion joint. One half the length of the deflection fitting shall be embedded in the concrete on the other side of the expansion joint.

The Contractor shall install combination expansion deflection fittings at all bridge expansion joints.

With the approval of the Engineer, the Contractor may substitute two 12 x 12 x 6 (300 x 300 x 150) min. stainless steel junction boxes attached to back of wall and connected with liquidtight flexible nonmetallic conduit for all expasion joints.

All dimensions are in inches (millimeters) unless otherwise shown.

Illinois Department of Transportation

PASSED January 1, 2015
ENGINEER OF POLICY AND PROCEDURES
APPROVED January 1, 2015
ENGINEER OF DESIGN AND ENVIRONMENT

ISSUED 1-1-15

| DATE | REVISIONS |
|---|---|
| 1-1-15 | New standard. |

# RACEWAY EMBEDDED IN STRUCTURE

(Sheet 1 of 3)

**STANDARD 812001**

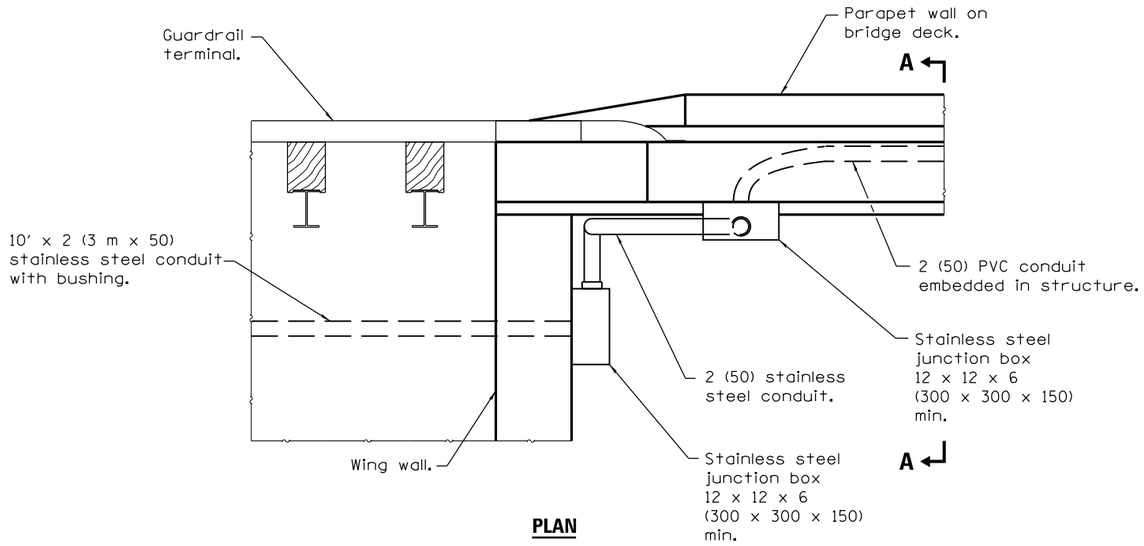


**PLAN**

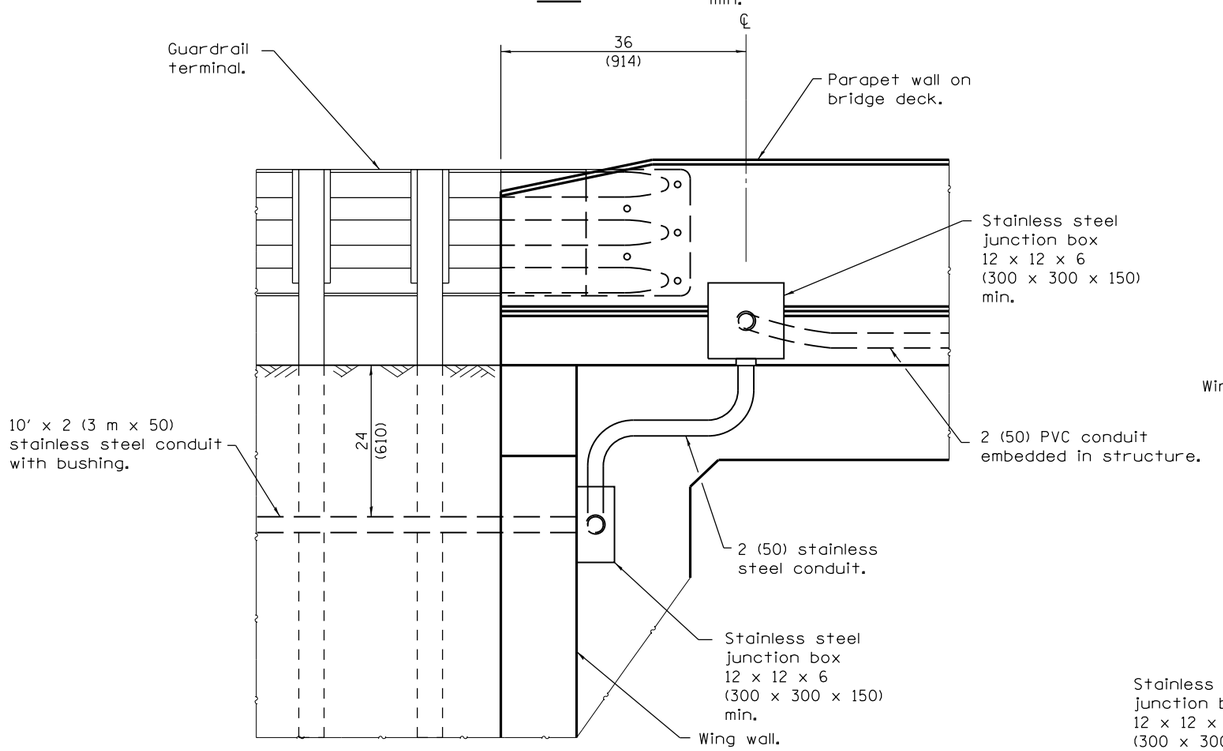


**ELEVATION**

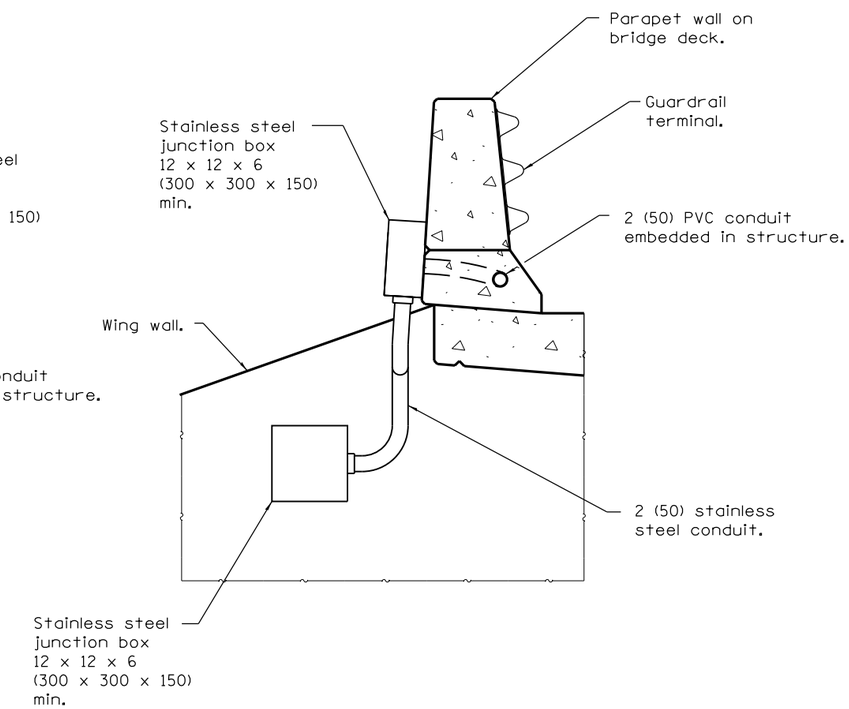


**VIEW A–A**

**INTEGRAL/SEMI–INTEGRAL ABUTMENT WITH PARAPET ENDING ON BRIDGE DECK**

Illinois Department of Transportation

PASSED January 1, 2015
ENGINEER OF POLICY AND PROCEDURES
APPROVED January 1, 2015
ENGINEER OF DESIGN AND ENVIRONMENT

ISSUED 1-1-15

# RACEWAY EMBEDDED IN STRUCTURE

(Sheet 2 of 3)

**STANDARD 812001**

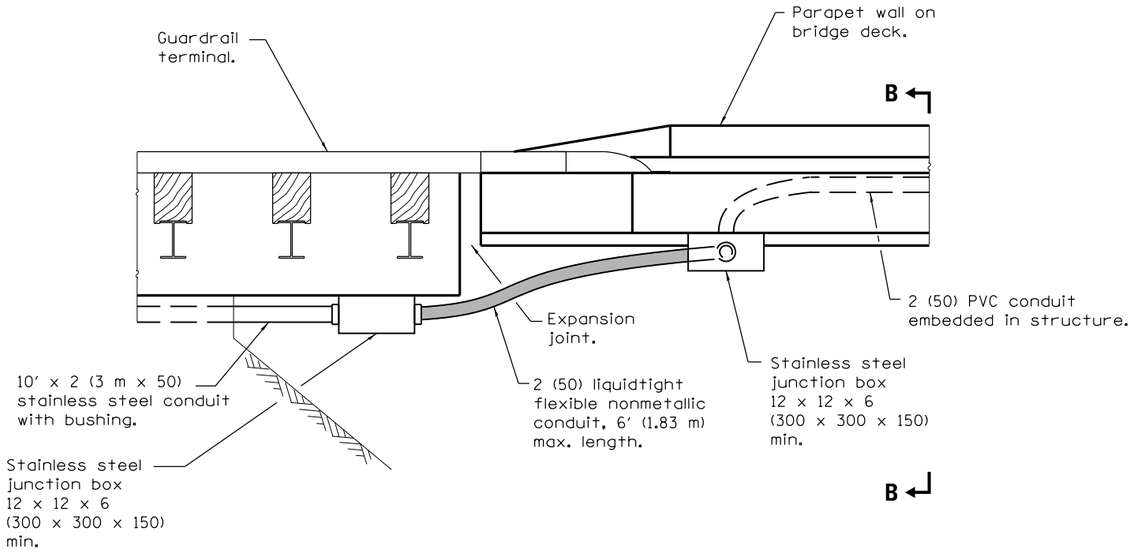


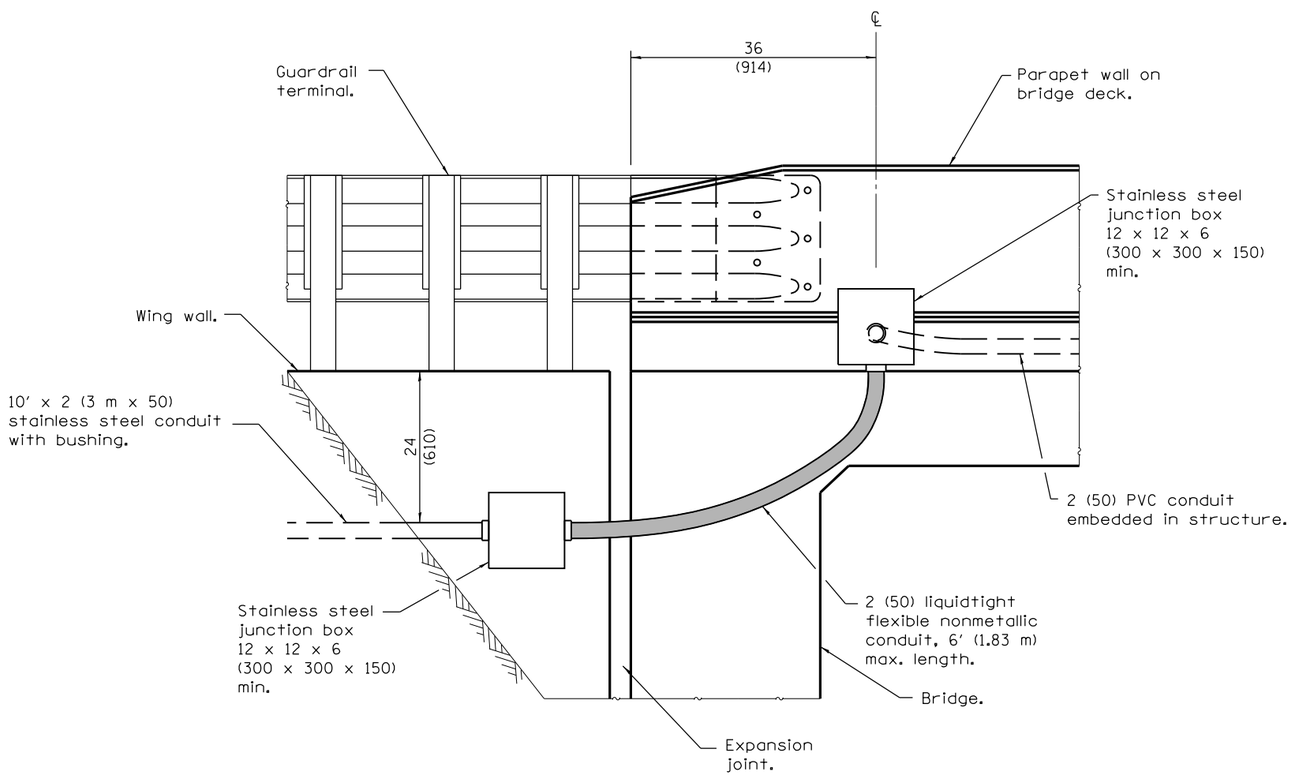


**ELEVATION**

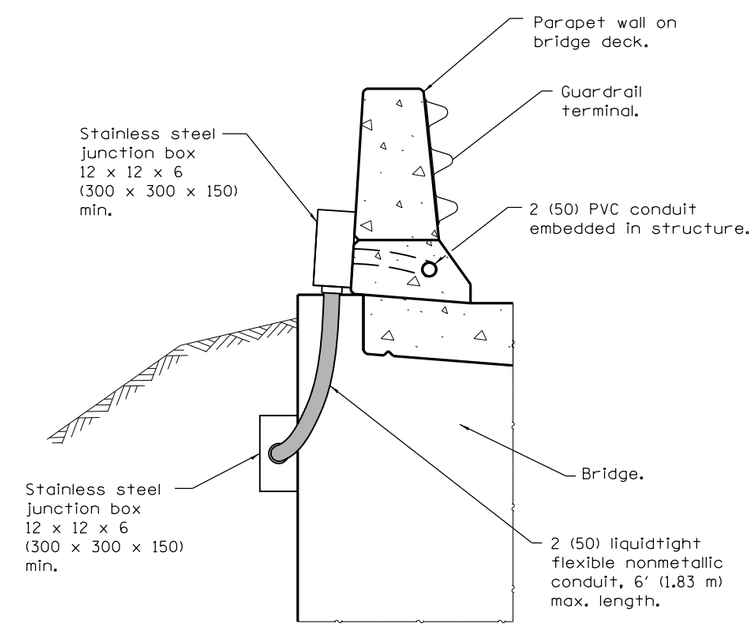


**VIEW B–B**

**JOINTED ABUTMENT WITH PARAPET ENDING ON BRIDGE DECK**

Illinois Department of Transportation

PASSED January 1, 2015
ENGINEER OF POLICY AND PROCEDURES

APPROVED January 1, 2015
ENGINEER OF DESIGN AND ENVIRONMENT

ISSUED 1-1-15

# RACEWAY EMBEDDED IN STRUCTURE

(Sheet 3 of 3)

**STANDARD 812001**

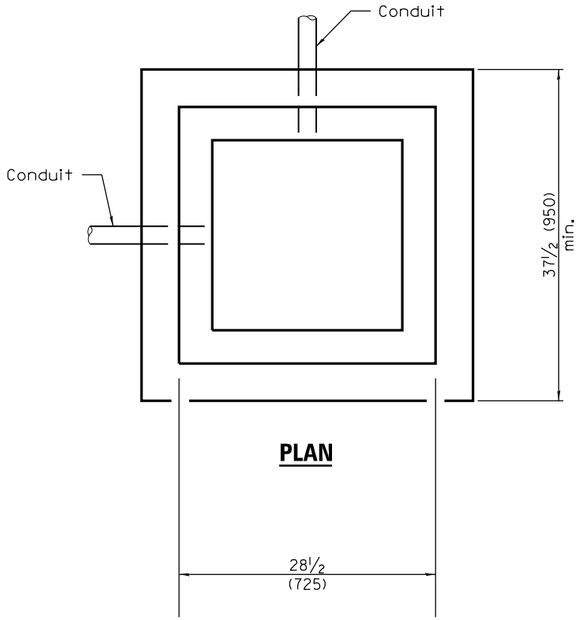


**PLAN**

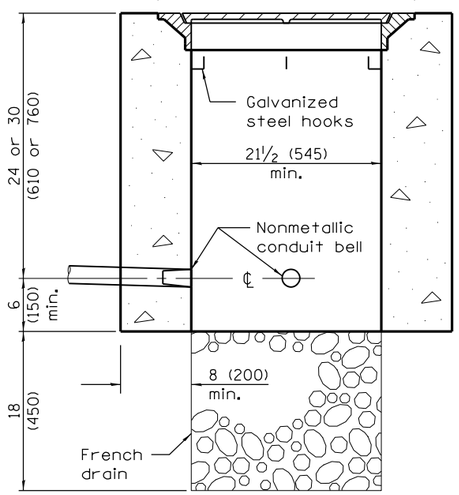


**ELEVATION**

**PORTLAND CEMENT CONCRETE**

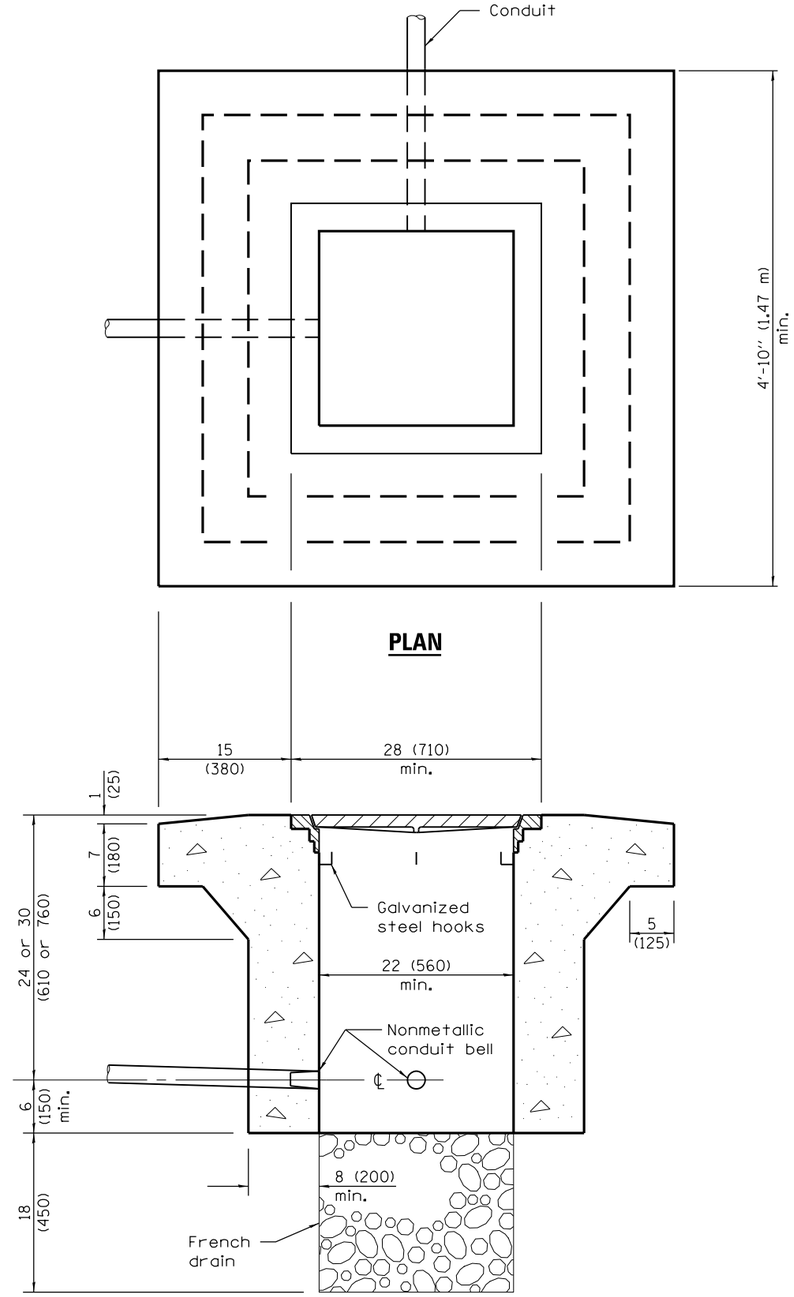


**PLAN**

**ELEVATION**

**PORTLAND CEMENT CONCRETE HEAVY DUTY**

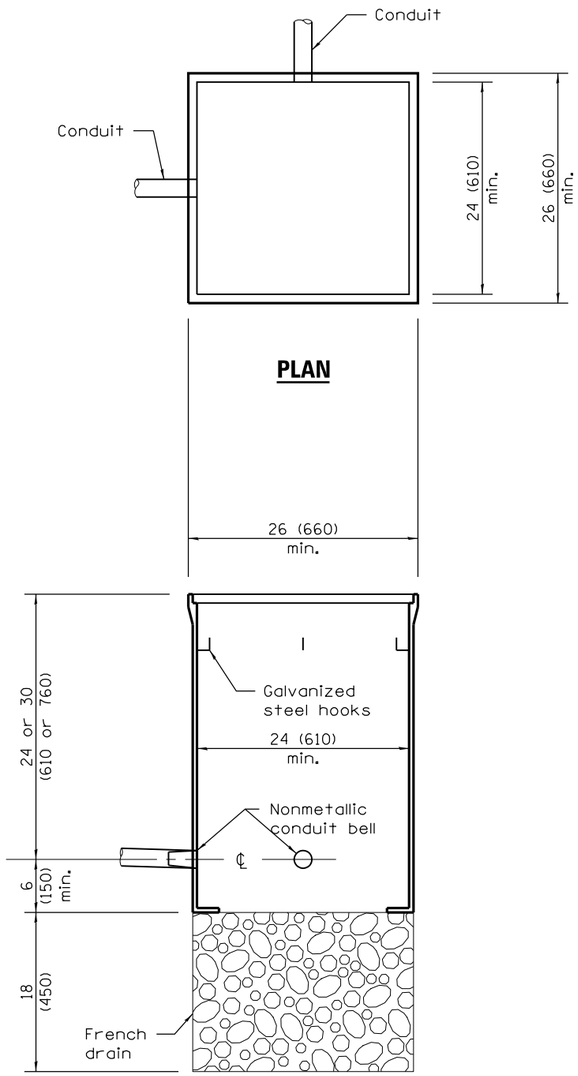


**PLAN**

**ELEVATION**

**COMPOSITE CONCRETE**

All dimensions are in inches (millimeters) unless otherwise shown.

## QUANTITIES

| Depth | Concrete yd³ (m³) Handhole | Concrete yd³ (m³) Heavy Duty Handhole |
|---|---|---|
| 30 (762) | 0.61 (0.47) | 0.98 (0.75) |
| 36 (914) | 0.73 (0.56) | 1.10 (0.84) |

Illinois Department of Transportation

APPROVED January 1, 2015
ENGINEER OF OPERATIONS

APPROVED January 1, 2015
ENGINEER OF DESIGN AND ENVIRONMENT

ISSUED 1-1-97

| DATE | REVISIONS |
|---|---|
| 1-1-15 | Corrected dimension on |
| | heavy duty handhole. Added |
| | concrete quantities table. |
| 1-1-09 | Switched units to |
| | English (metric). |
| | |

# HANDHOLES

**STANDARD 814001–03**

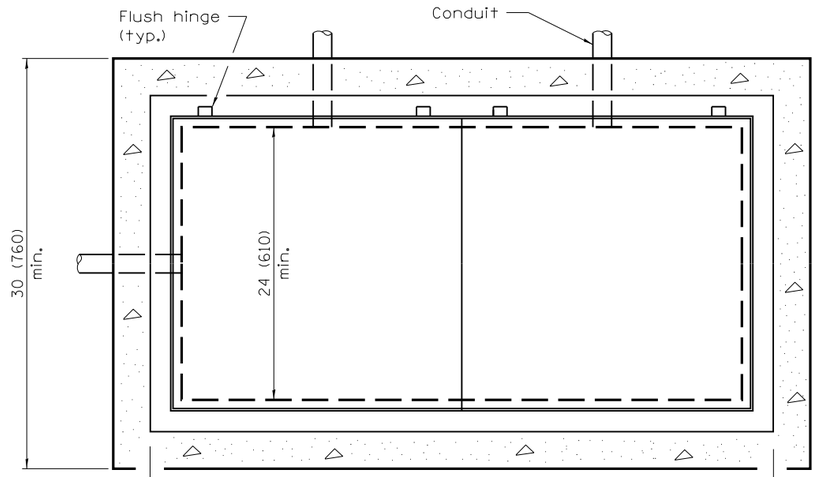


**PLAN**

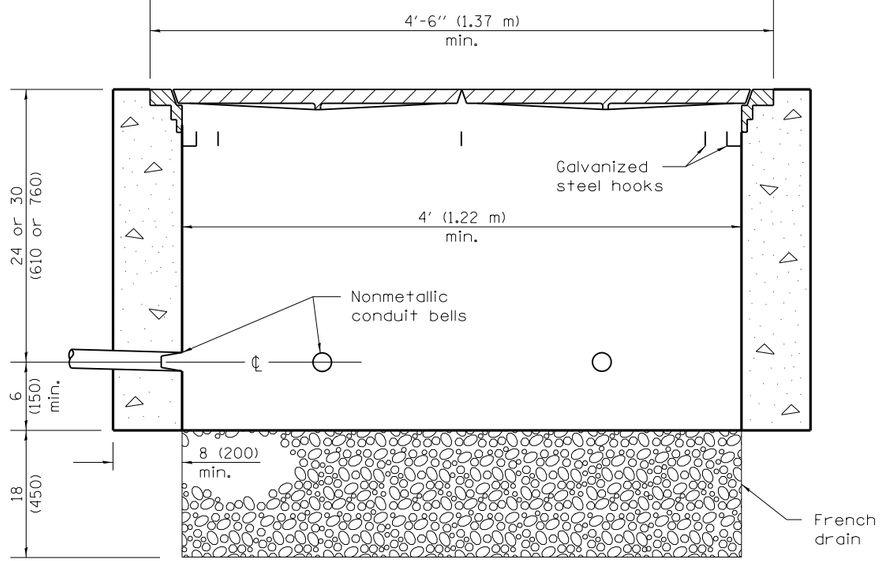


**ELEVATION**

**PORTLAND CEMENT CONCRETE**

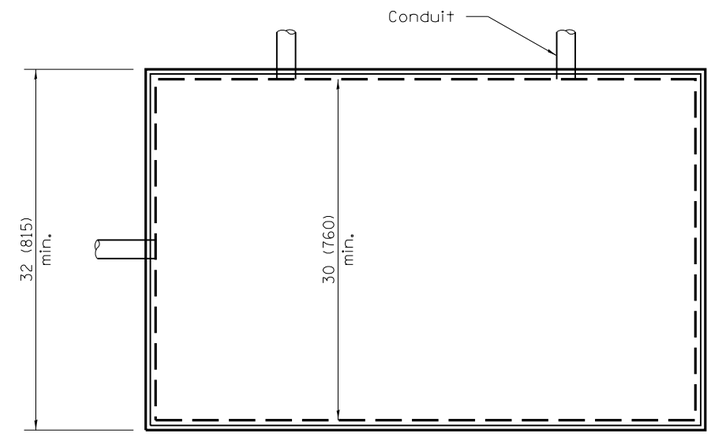


**PLAN**

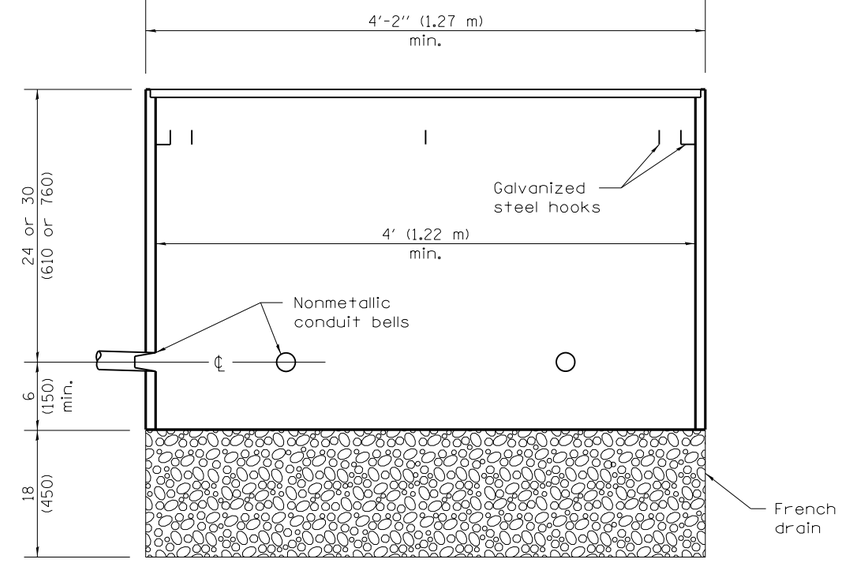


**ELEVATION**

**COMPOSITE CONCRETE**

All dimensions are in inches (millimeters) unless otherwise shown.

Illinois Department of Transportation

APPROVED January 1, 2009
ENGINEER OF OPERATIONS

APPROVED January 1, 2009
ENGINEER OF DESIGN AND ENVIRONMENT

ISSUED 1-1-97

| DATE | REVISIONS |
|---|---|
| 1-1-09 | Switched units to |
| | English (metric). |
| | |
| 1-1-07 | Revised composite conc. |
| | handhole. Rem. weights |
| | of frames and covers. |

# DOUBLE HANDHOLES

**STANDARD 814006–02**

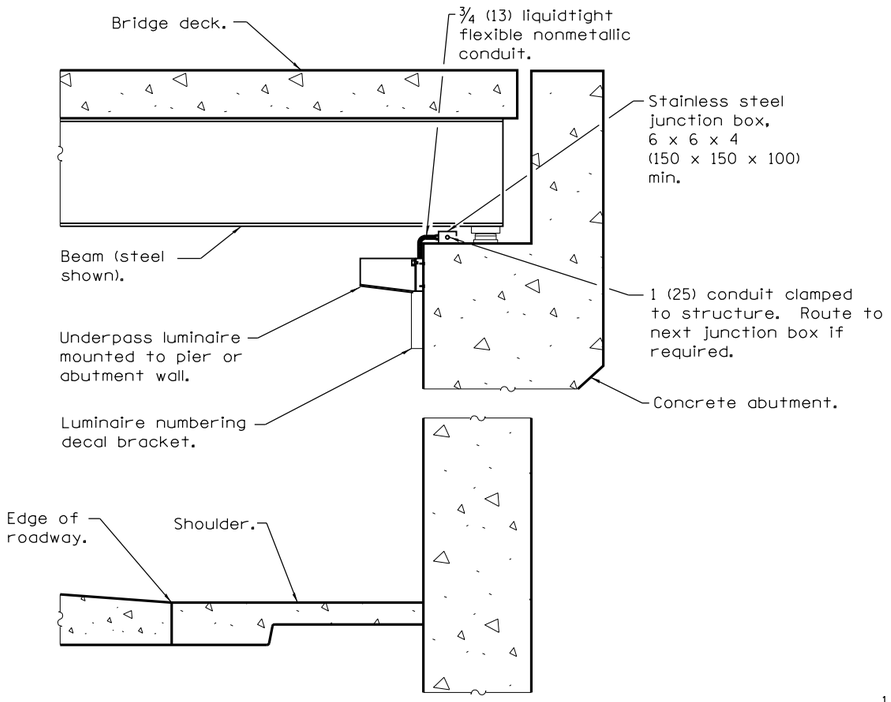


**SECTION A–A**

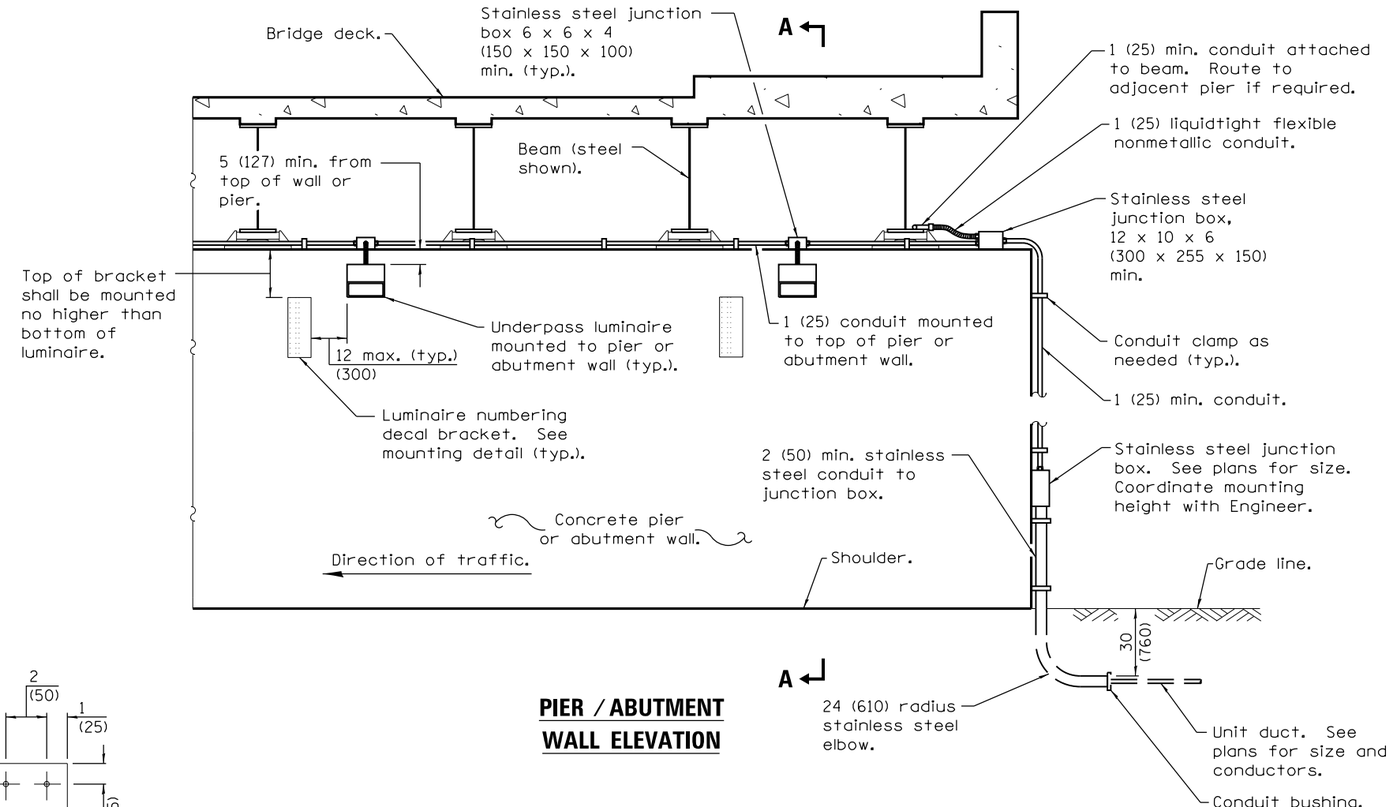


**PIER / ABUTMENT WALL ELEVATION**

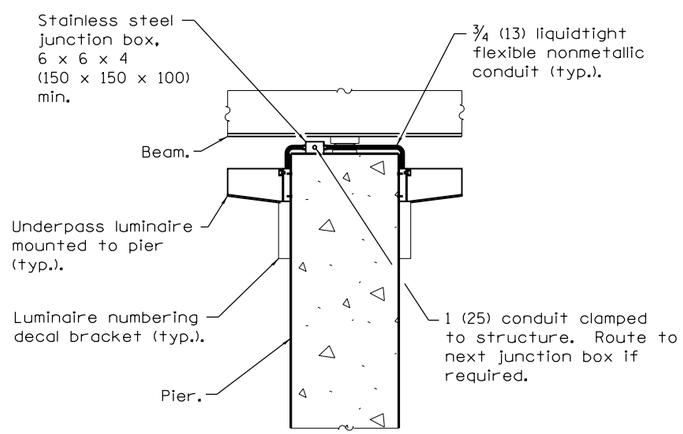


**CENTER PIER DETAIL**

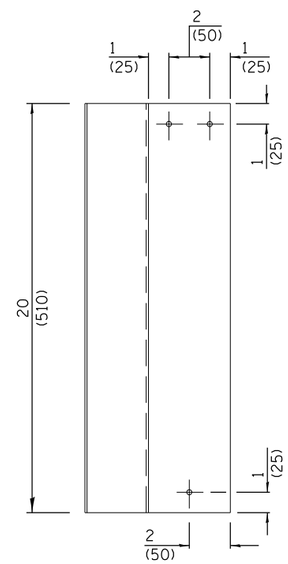


**ELEVATION**

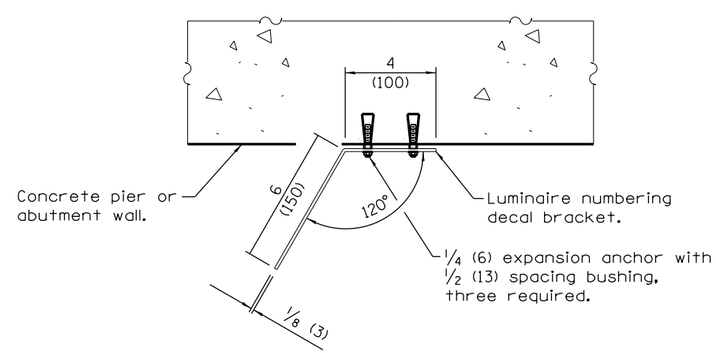


**TOP VIEW**

**LUMINAIRE NUMBERING DECAL BRACKET MOUNTING DETAIL**

**CONDUIT BEAM CLAMP**

**CONDUIT CLAMP**

## GENERAL NOTES

See plans for underpass luminaire locations.

Rigid conduit may be used in lieu of flexible conduit.

Stainless steel conduit shall be used beneath any openings in the bridge deck.

Branch circuits to luminaire shown routed from underground. Branch circuits may be routed from bridge parapet above.

All dimensions are in inches (millimeters) unless otherwise shown.

Illinois Department of Transportation

PASSED April 1, 2016
ENGINEER OF PRELIMINARY ENGINEERING
APPROVED April 1, 2016
ENGINEER OF DESIGN AND ENVIRONMENT

ISSUED 1-1-16

| DATE | REVISIONS |
|---|---|
| 4-1-16 | New standard. |

# UNDERPASS LIGHTING WALL MOUNT

**STANDARD 821001**

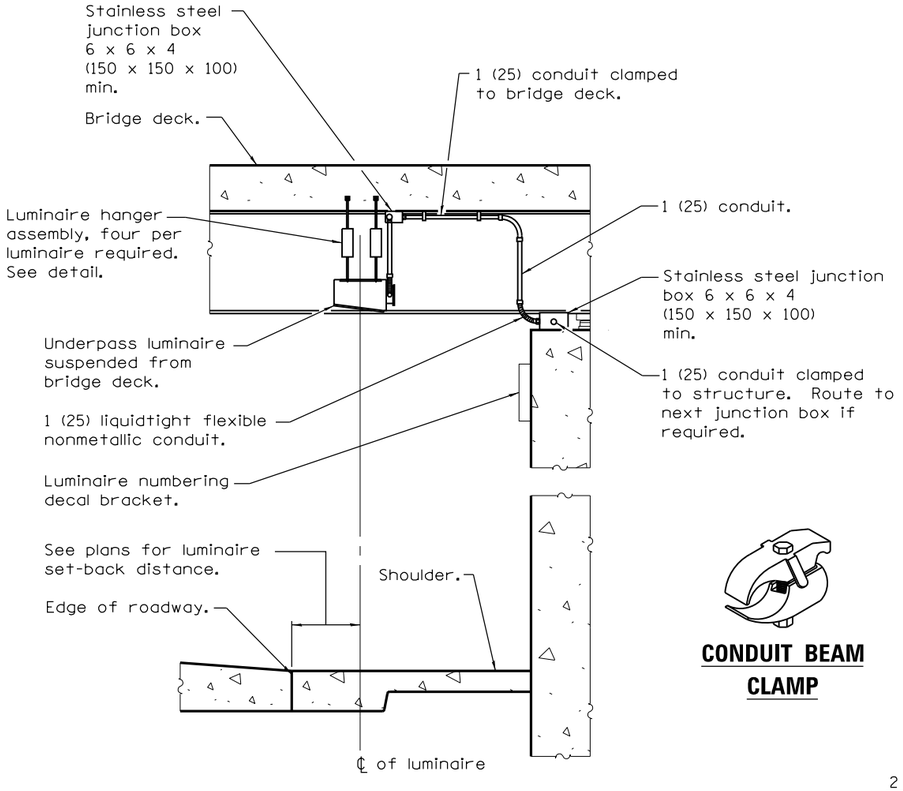


## SECTION A–A



## CONDUIT BEAM CLAMP

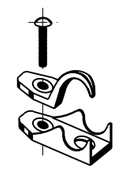

## CONDUIT CLAMP

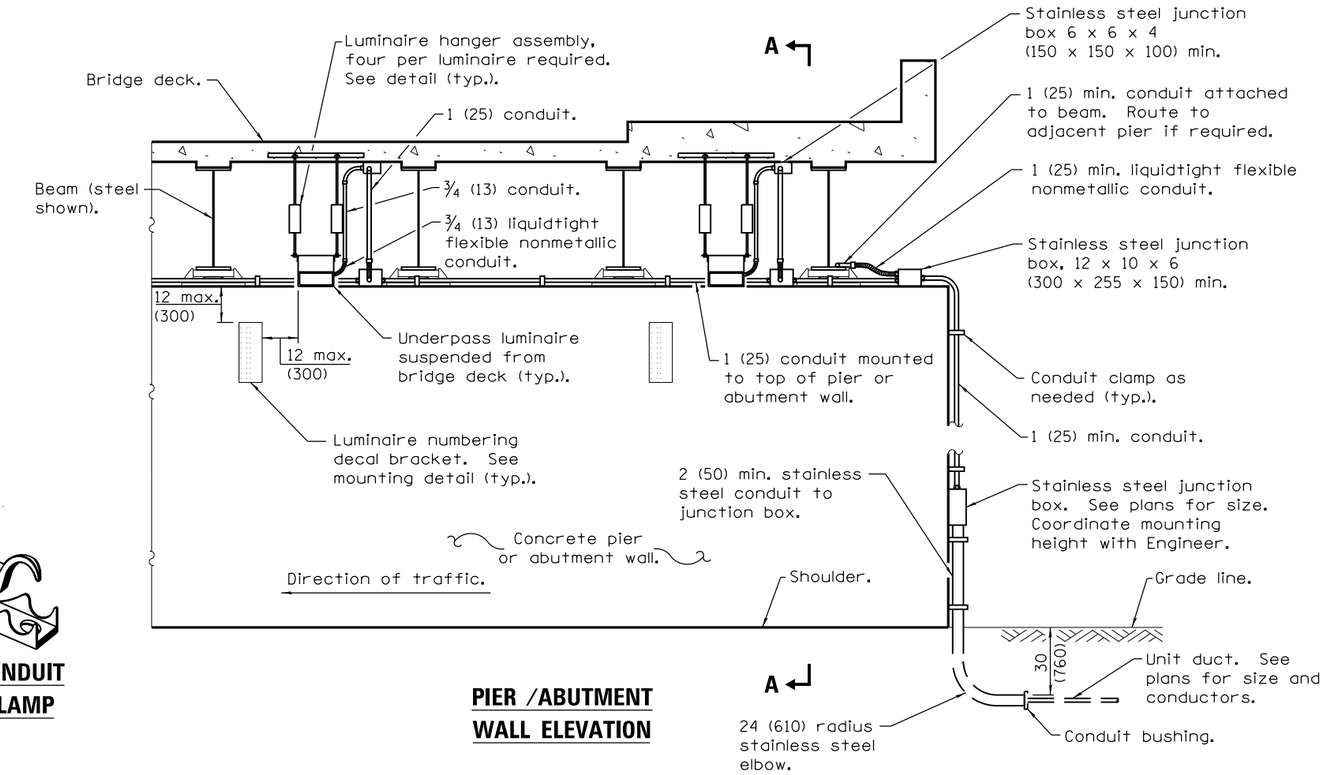


## PIER /ABUTMENT WALL ELEVATION

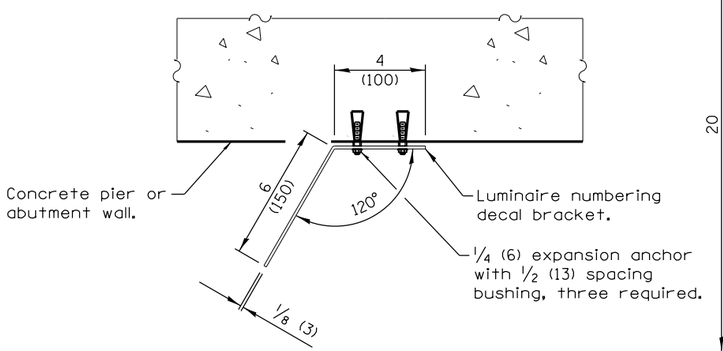


## TOP VIEW

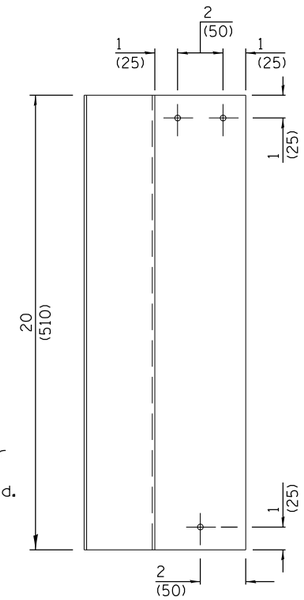


## ELEVATION

## LUMINAIRE NUMBERING DECAL BRACKET MOUNTING DETAIL

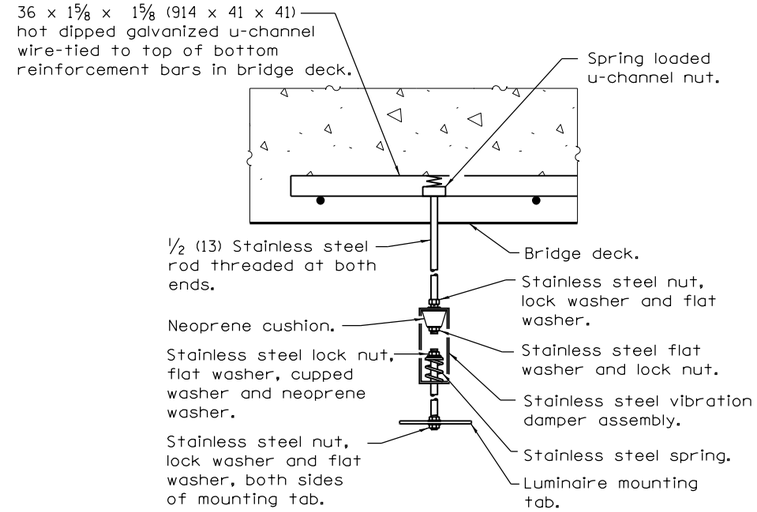


## LUMINAIRE HANGER ASSEMBLY DETAIL

## GENERAL NOTES

See plans for underpass luminaire locations.

Underpass luminaires shall be centered between beams unless otherwise directed by the Engineer.

Optics of underpass luminaires shall be installed 1 (25) above the bottom of the beams with no parts of the luminaire or attached conduit below the beams.

Rigid conduit may be used in lieu of flexible conduit.

Stainless steel conduit shall be used beneath any openings in the bridge deck.

Branch circuits to luminaires shown routed from underground. Branch circuits may also be routed from bridge parapet above.

All dimensions are in inches (millimeters) unless otherwise shown.

Illinois Department of Transportation

PASSED April 1, 2016
ENGINEER OF PRELIMINARY ENGINEERING
APPROVED April 1, 2016
ENGINEER OF DESIGN AND ENVIRONMENT

ISSUED 1-1-16

| DATE | REVISIONS |
|---|---|
| 4-1-16 | New standard. |

# UNDERPASS LIGHTING SUSPENDED

STANDARD 821006

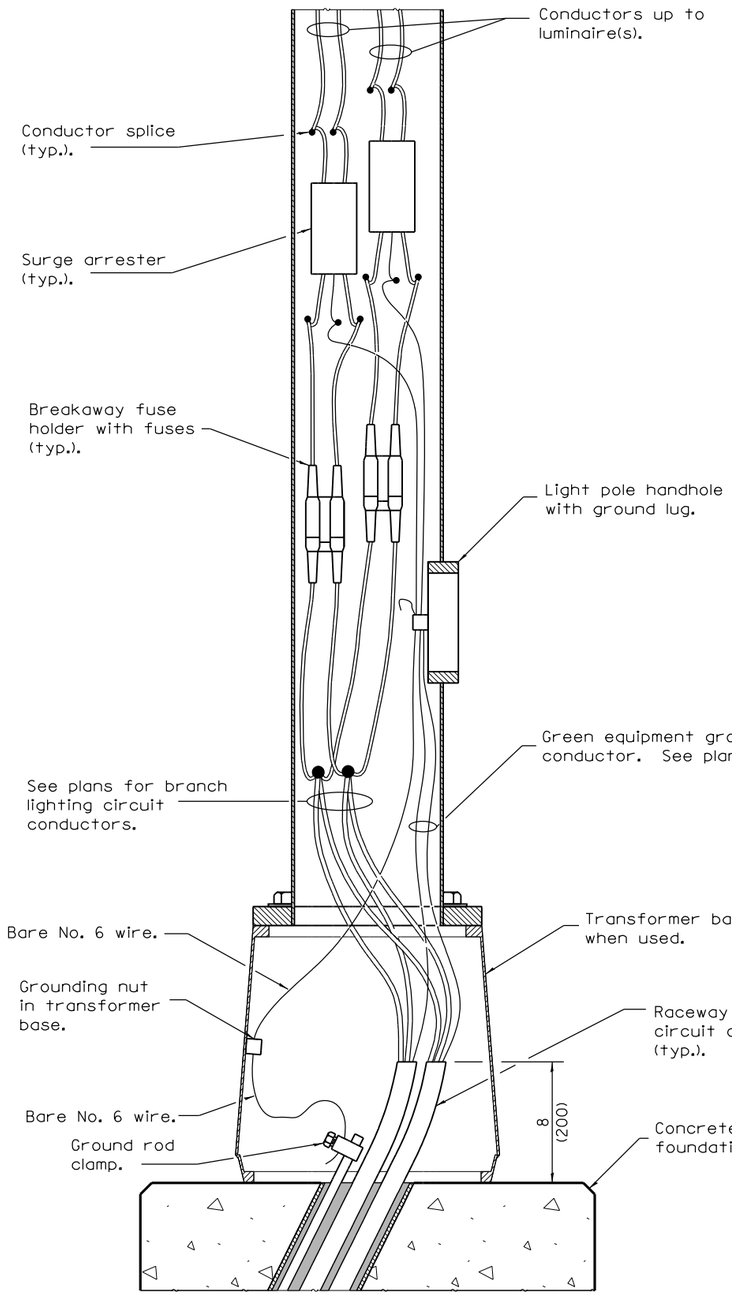


**ELEVATION AT POLE BASE WITH CONCRETE FOUNDATION**

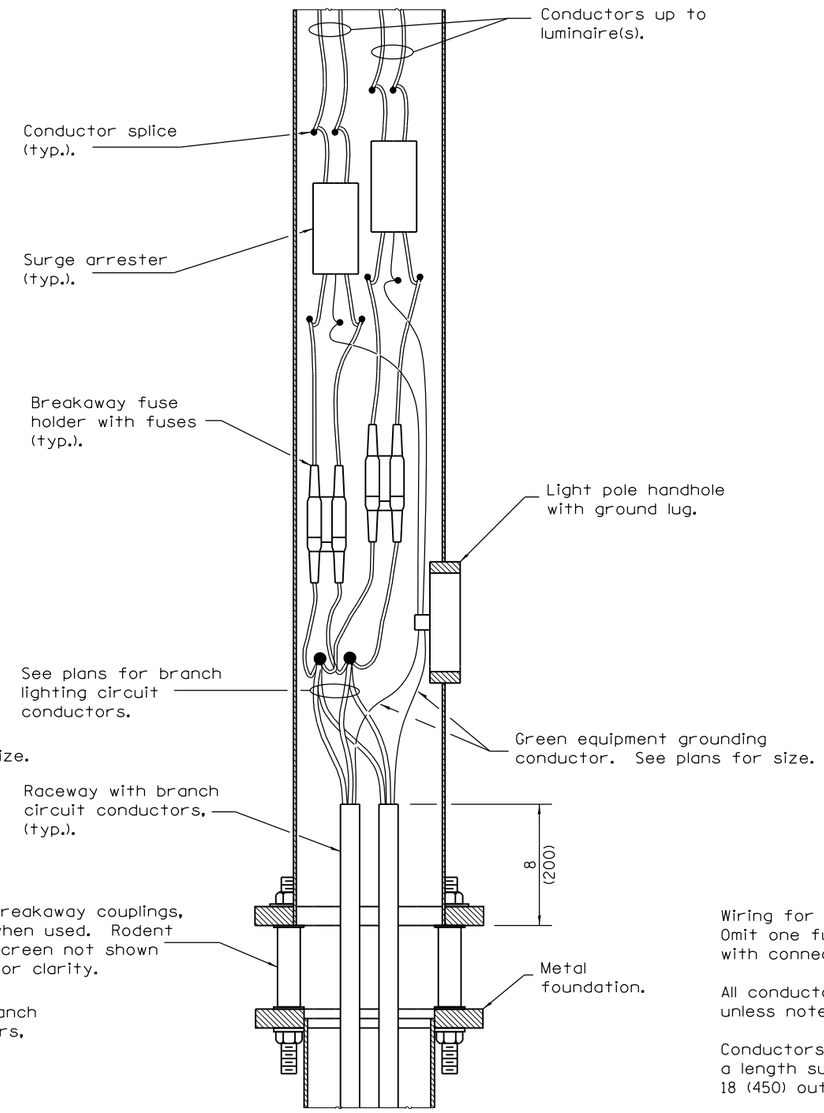


**ELEVATION AT POLE BASE WITH METAL FOUNDATION**

(Rodent screen not shown)

## GENERAL NOTES

Wiring for twin luminaire installation shown. Omit one fuse holder and one surge arrester with connections for single luminaire installation.

All conductors originating in pole shall be No. 10 unless noted otherwise.

Conductors extended into light poles shall be of a length sufficient for splices to be withdrawn 18 (450) out of pole handole.

Any voids in the foundation shall be filled with fine aggregate.

See Standard 836001 for Light Pole Foundation and ground rod.

All dimensions are in inches (millimeters) unless otherwise shown.

Illinois Department of Transportation

PASSED January 1, 2015
ENGINEER OF PRELIMINARY ENGINEERING
APPROVED January 1, 2015
ENGINEER OF DESIGN AND ENVIRONMENT

ISSUED 1-1-14

| DATE | REVISIONS |
|---|---|
| 1-1-15 | Changed 'protector' to 'arrester'. |
| 1-1-14 | New standard. |

# LUMINAIRE WIRING DIAGRAM

**STANDARD 821101–01**

**30 AMP**

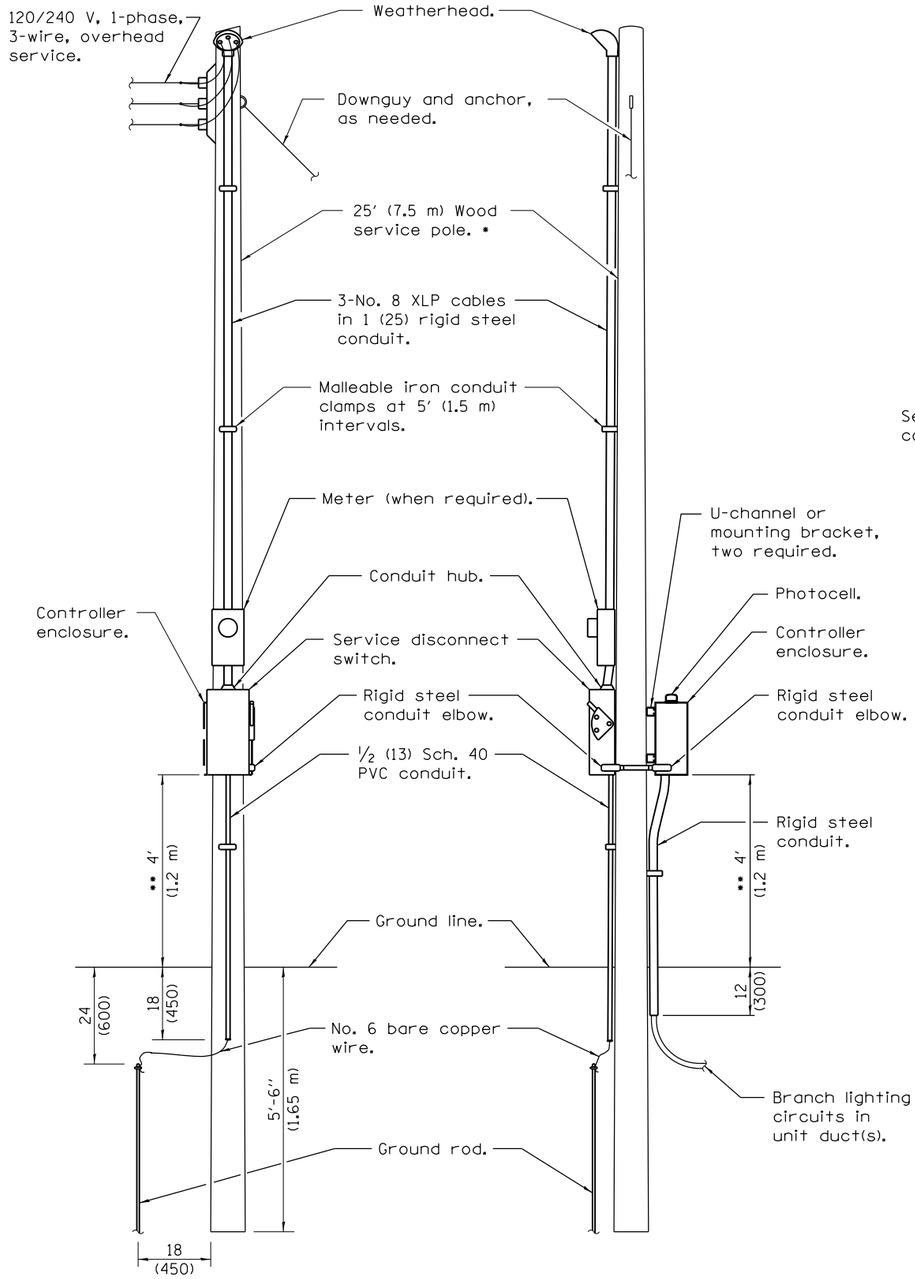


**FRONT** **SIDE**

## ELECTRIC SERVICE INSTALLATION

• Size larger as needed.
•• Or as directed by Utility Company.

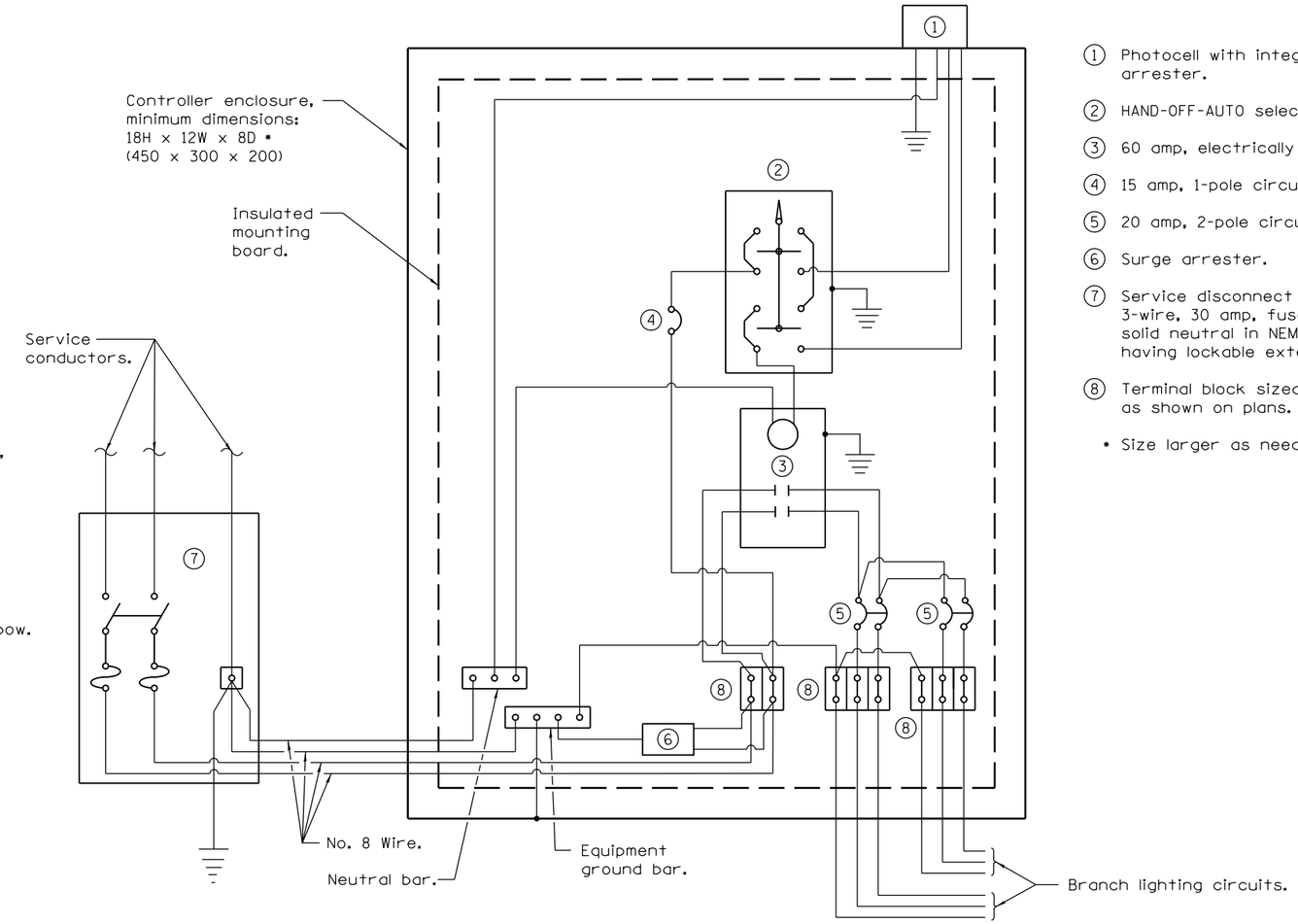


## CONTROL SCHEMATIC

① Photocell with integral surge arrester.

② HAND-OFF-AUTO selector switch.

③ 60 amp, electrically held contactor.

④ 15 amp, 1-pole circuit breaker.

⑤ 20 amp, 2-pole circuit breaker.

⑥ Surge arrester.

⑦ Service disconnect switch - 2-pole, 3-wire, 30 amp, fused at 30 amp, solid neutral in NEMA 4X enclosure having lockable external handle.

⑧ Terminal block sized for conductors as shown on plans.

• Size larger as needed.

## GENERAL NOTES

Provide 12x9x1 (305x225x25) watertight pouch mounted inside controller door with as-built plans and schematics.

Provide engraved nameplate on front of enclosure reading "LIGHTING".

Enclosure shall be mounted to pole with pole-bands and lag-bolts.

Work pad not shown.

All dimensions are in inches (millimeters) unless otherwise shown.

Illinois Department of Transportation

PASSED April 1, 2016
ENGINEER OF PRELIMINARY ENGINEERING
APPROVED April 1, 2016
ENGINEER OF DESIGN AND ENVIRONMENT

ISSUED 1-1-10

| DATE | REVISIONS |
|---|---|
| 4-1-16 | Corrected connection at |
| | terminal block. |
| | |
| 1-1-15 | Added notes ⑧ for 30A |
| | controller, ⑪ for 60A |
| | controller. |

# LIGHTING CONTROLLER POLE MOUNTED, 240V

(Sheet 1 of 2)

**STANDARD 825001–03**

**60 AMP**

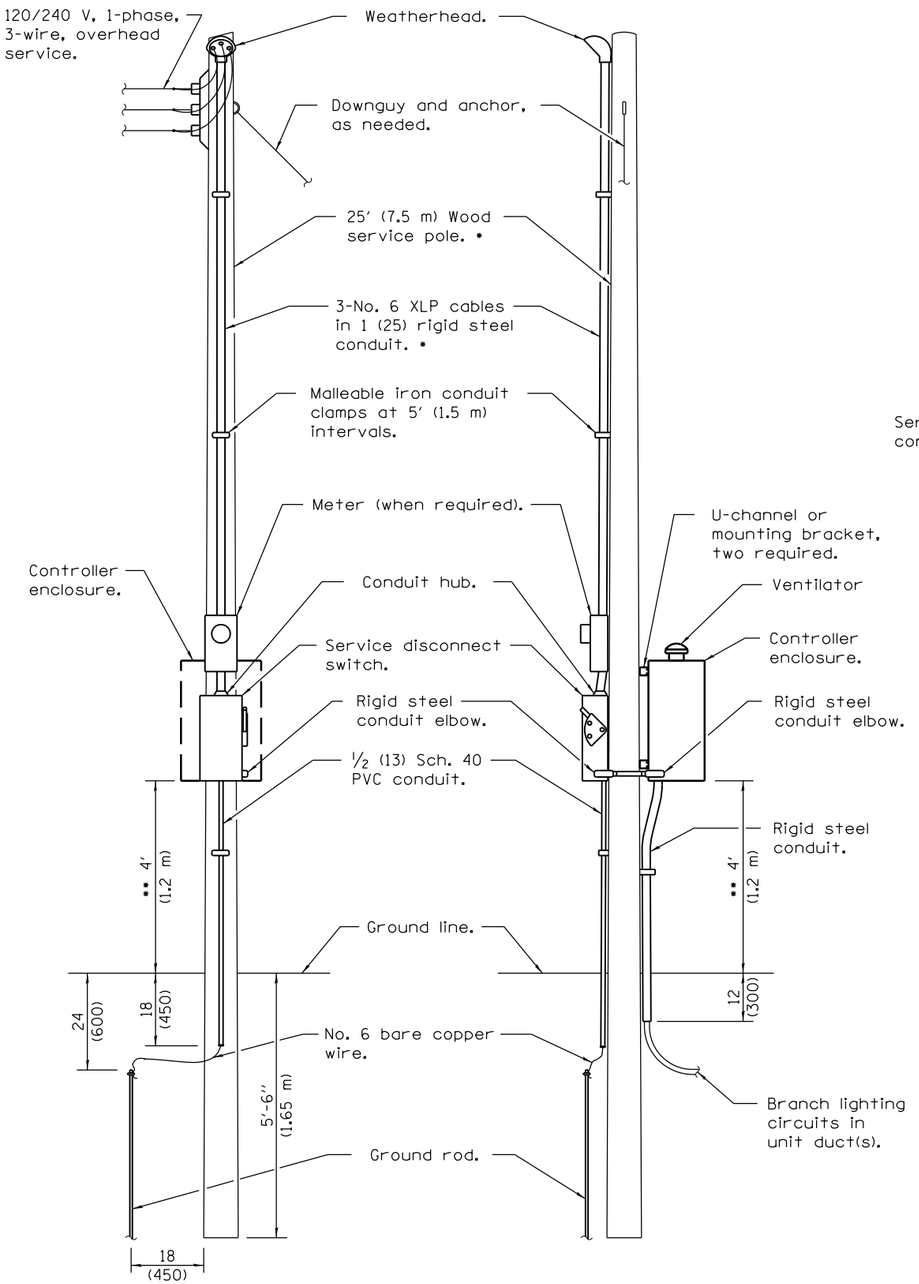


**FRONT** **SIDE**

**ELECTRIC SERVICE INSTALLATION**

• Size larger as needed.
•• Or as directed by Utility Company.

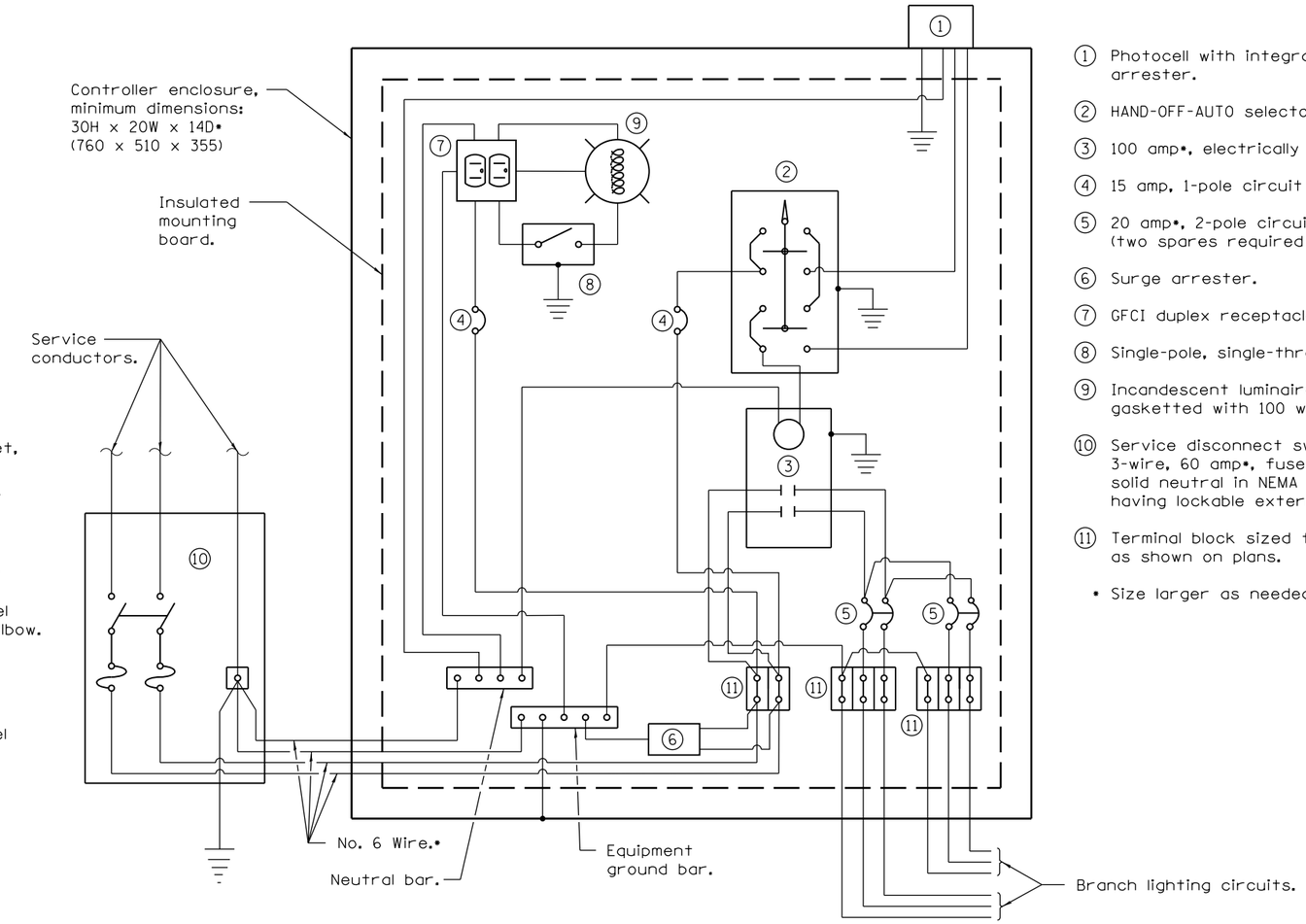


**CONTROL SCHEMATIC**

1. Photocell with integral surge arrester.
2. HAND-OFF-AUTO selector switch.
3. 100 amp•, electrically held contactor.
4. 15 amp, 1-pole circuit breaker.
5. 20 amp•, 2-pole circuit breaker (two spares required but not shown).
6. Surge arrester.
7. GFCI duplex receptacle.
8. Single-pole, single-throw switch.
9. Incandescent luminaire, enclosed and gasketted with 100 watt lamp.
10. Service disconnect switch - 2-pole, 3-wire, 60 amp•, fused at 60 amp•, solid neutral in NEMA 4X enclosure having lockable external handle.
11. Terminal block sized for conductors as shown on plans.

• Size larger as needed.

Illinois Department of Transportation

PASSED April 1, 2016
ENGINEER OF PRELIMINARY ENGINEERING
APPROVED April 1, 2016
ENGINEER OF DESIGN AND ENVIRONMENT

ISSUED 01-1-10

# LIGHTING CONTROLLER POLE MOUNTED, 240V

(Sheet 2 of 2)

**STANDARD 825001–03**

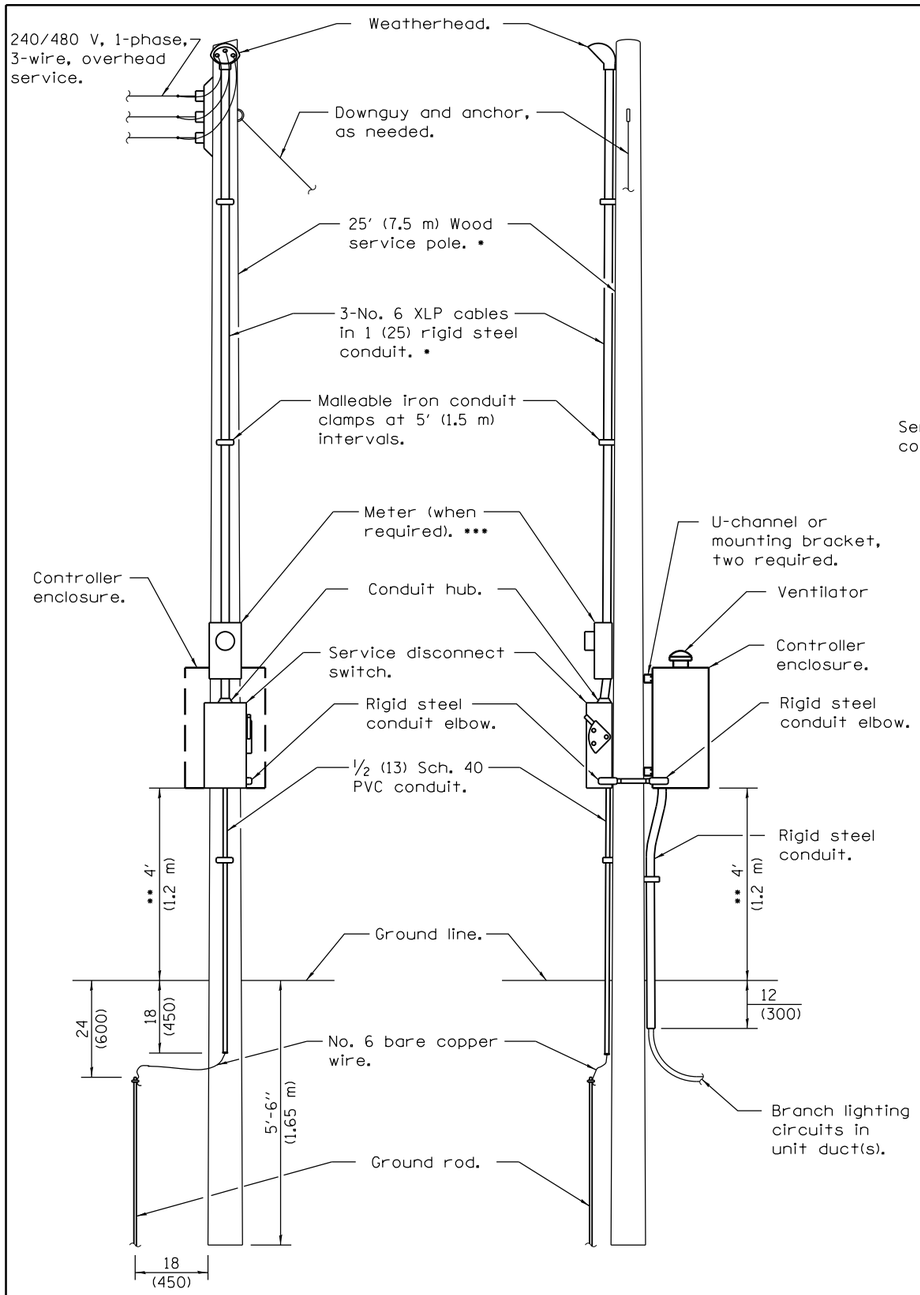


**FRONT** **SIDE**

## ELECTRIC SERVICE INSTALLATION

- • Size larger as needed.
- •• Or as directed by Utility Company.
- ••• When cold sequencing is required, provide a meter disconnect switch as directed by Utility Company.

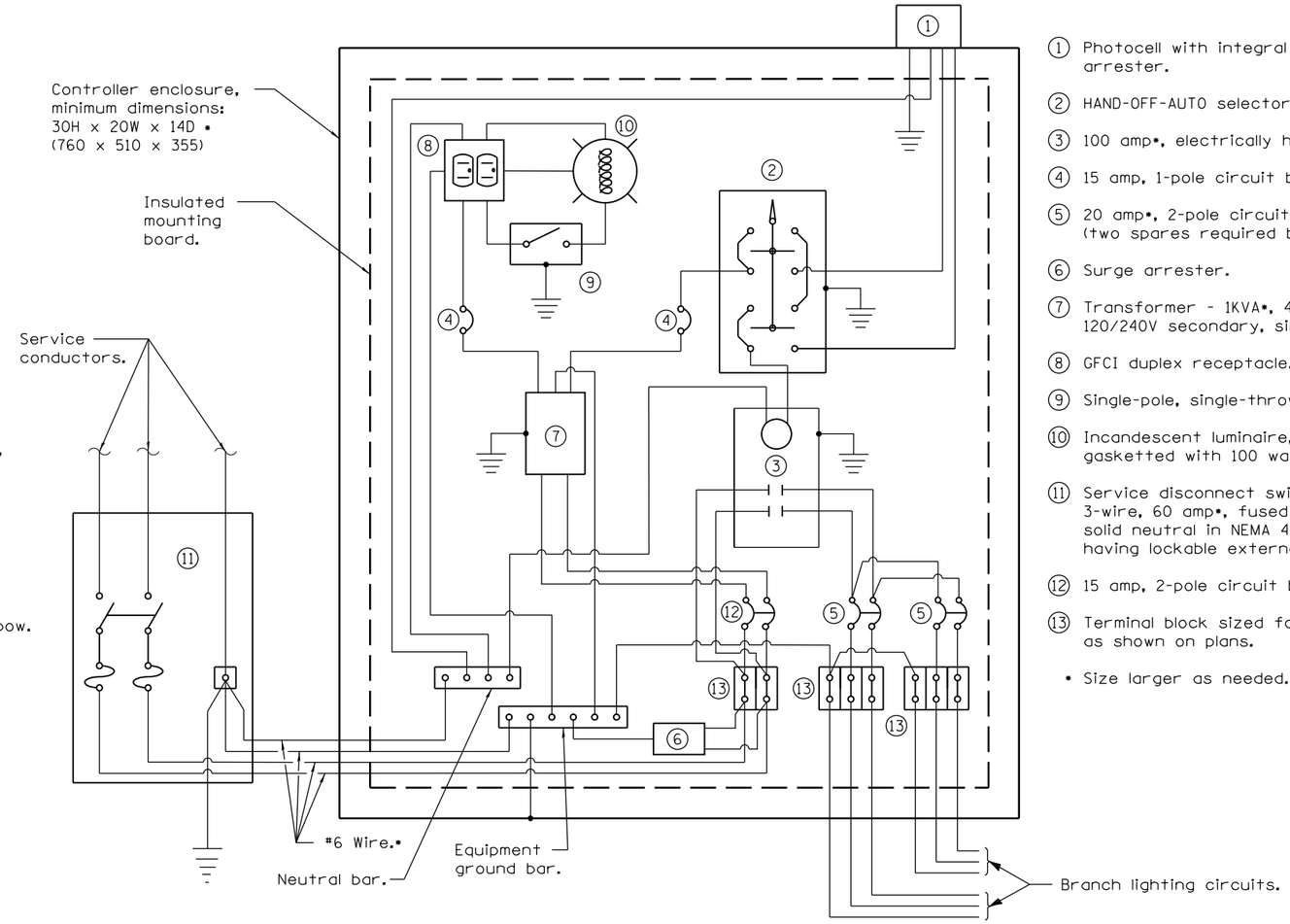


## CONTROL SCHEMATIC

1. Photocell with integral surge arrester.
2. HAND-OFF-AUTO selector switch.
3. 100 amp•, electrically held contactor.
4. 15 amp, 1-pole circuit breaker.
5. 20 amp•, 2-pole circuit breaker (two spares required but not shown).
6. Surge arrester.
7. Transformer - 1KVA•, 480V primary, 120/240V secondary, single-phase, 60Hz.
8. GFCI duplex receptacle.
9. Single-pole, single-throw switch.
10. Incandescent luminaire, enclosed and gasketted with 100 watt lamp.
11. Service disconnect switch - 2-pole, 3-wire, 60 amp•, fused at 60 amp•, solid neutral in NEMA 4X enclosure having lockable external handle.
12. 15 amp, 2-pole circuit breaker.
13. Terminal block sized for conductors as shown on plans.

• Size larger as needed.

## GENERAL NOTES

Provide 12x9x1 (305x225x25) watertight pouch mounted inside controller door with as-built plans and schematics.

Provide engraved nameplate on front of enclosure reading "LIGHTING".

Enclosure shall be mounted to pole with pole-bands and lag-bolts.

Work pad not shown.

All dimensions are in inches (millimeters) unless otherwise shown.

Illinois Department of Transportation

PASSED January 1, 2015
ENGINEER OF PRELIMINARY ENGINEERING
APPROVED January 1, 2015
ENGINEER OF DESIGN AND ENVIRONMENT

ISSUED 1-1-10

| DATE | REVISIONS |
|---|---|
| 1-1-15 | Added note 13. |
| | |
| | |
| 1-1-11 | Renamed Standard. Modified |
| | service disconnect and |
| | contactor. |

# LIGHTING CONTROLLER POLE MOUNTED, 480V

**STANDARD 825006–02**

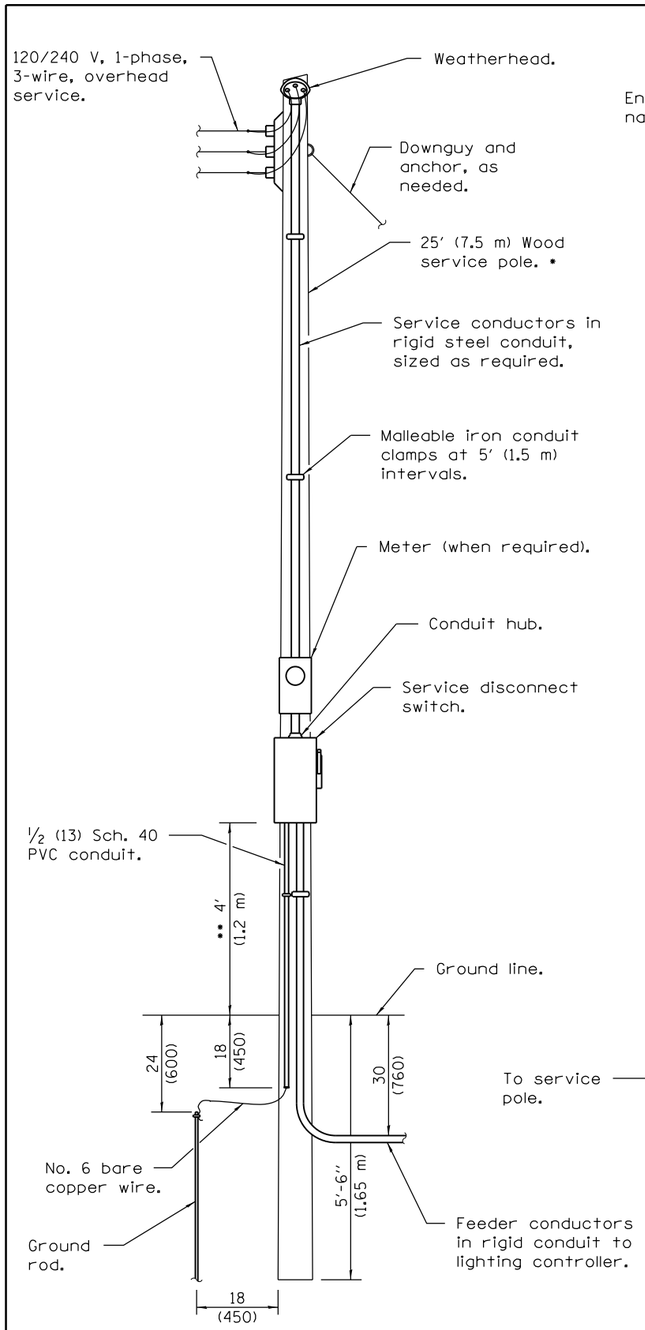


## ELECTRIC SERVICE INSTALLATION

• Size larger as needed.
•• Or as directed by Utility Company.

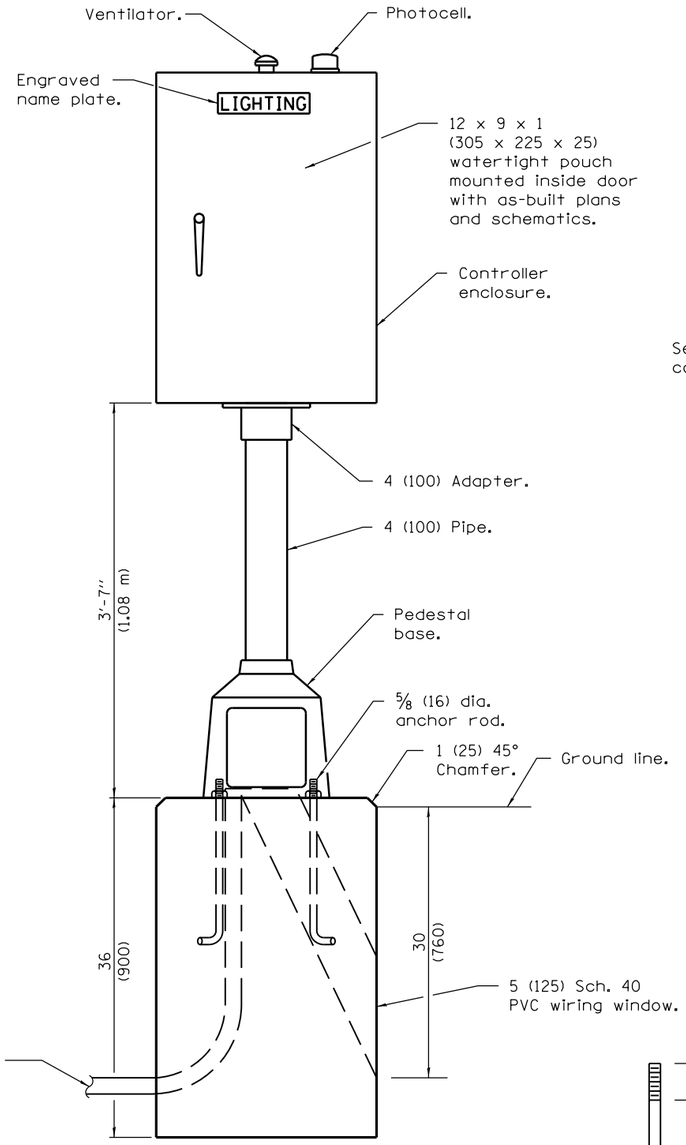


## LIGHTING CONTROLLER

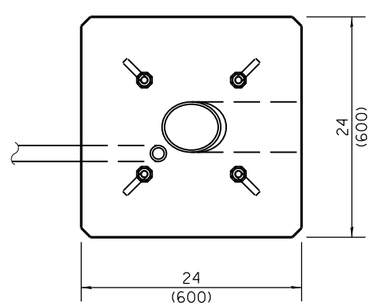


## FOUNDATION (PLAN)

(Work pad not shown.)

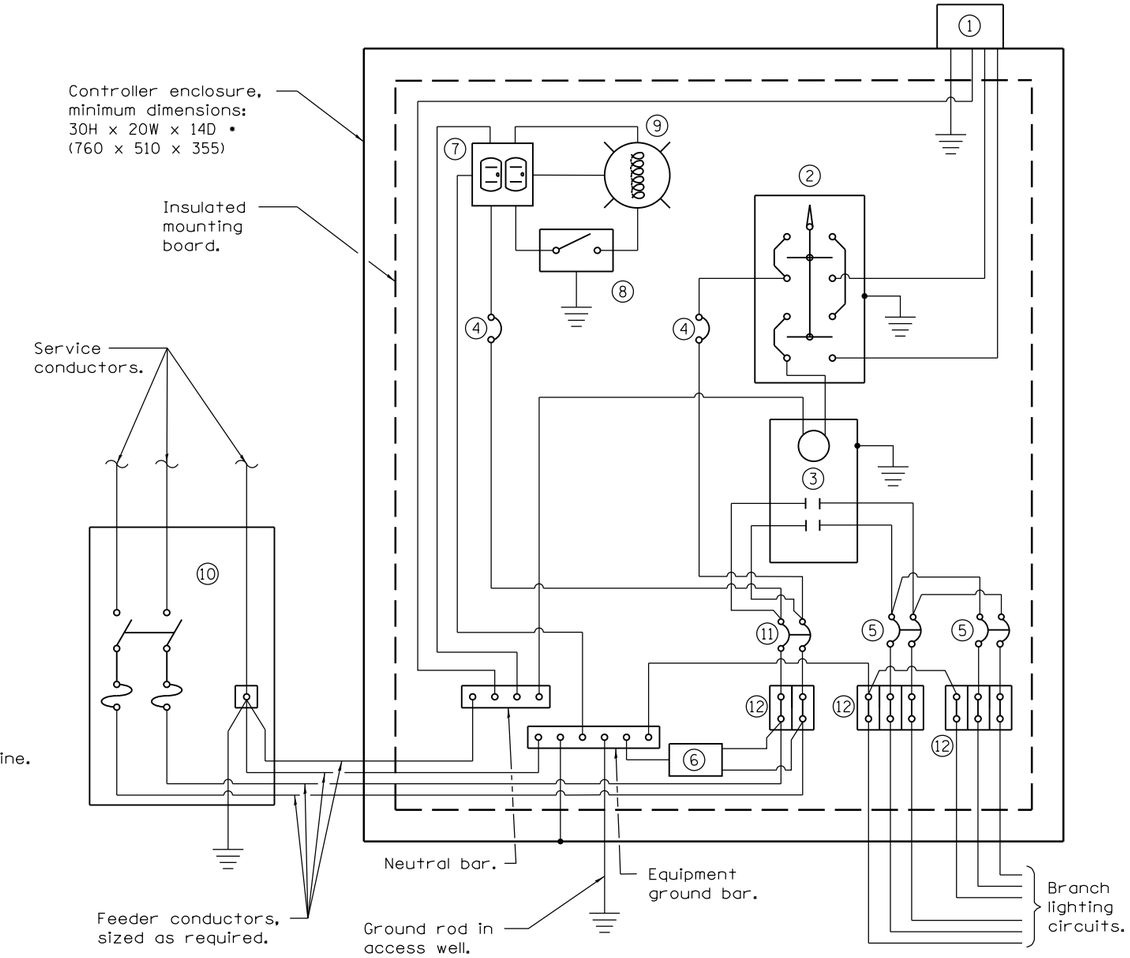


## CONTROL SCHEMATIC

1. Photocell with integral surge arrester.
2. HAND-OFF-AUTO selector switch.
3. 100 amp•, electrically held contactor.
4. 15 amp, 1-pole circuit breaker.
5. 20 amp•, 2-pole circuit breaker (two spares required but not shown).
6. Surge arrester.
7. GFCI duplex receptacle.
8. Single-pole, single-throw switch.
9. Incandescent luminaire, enclosed and gasketted with 100 watt lamp.
10. Service disconnect switch - 2-pole, 3-wire, 60 amp•, fused at 60 amp•, solid neutral in NEMA 4X enclosure having lockable external handle.
11. 60 amp•, 2-pole circuit breaker.
12. Terminal block sized for conductors as shown on plans.

• Size larger as needed.

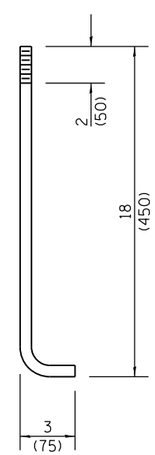


## ANCHOR ROD DETAIL

All dimensions are in inches (millimeters) unless otherwise shown.

| DATE | REVISIONS |
|---|---|
| 1-1-15 | Added note 12. |
| | |
| | |
| 1-1-12 | Revised feeder burial |
| | depth. |
| | |

# LIGHTING CONTROLLER PEDESTAL MOUNTED, 240V

STANDARD 825011–03

Illinois Department of Transportation

PASSED January 1, 2015
ENGINEER OF PRELIMINARY ENGINEERING
APPROVED January 1, 2015
ENGINEER OF DESIGN AND ENVIRONMENT

ISSUED 1-1-10

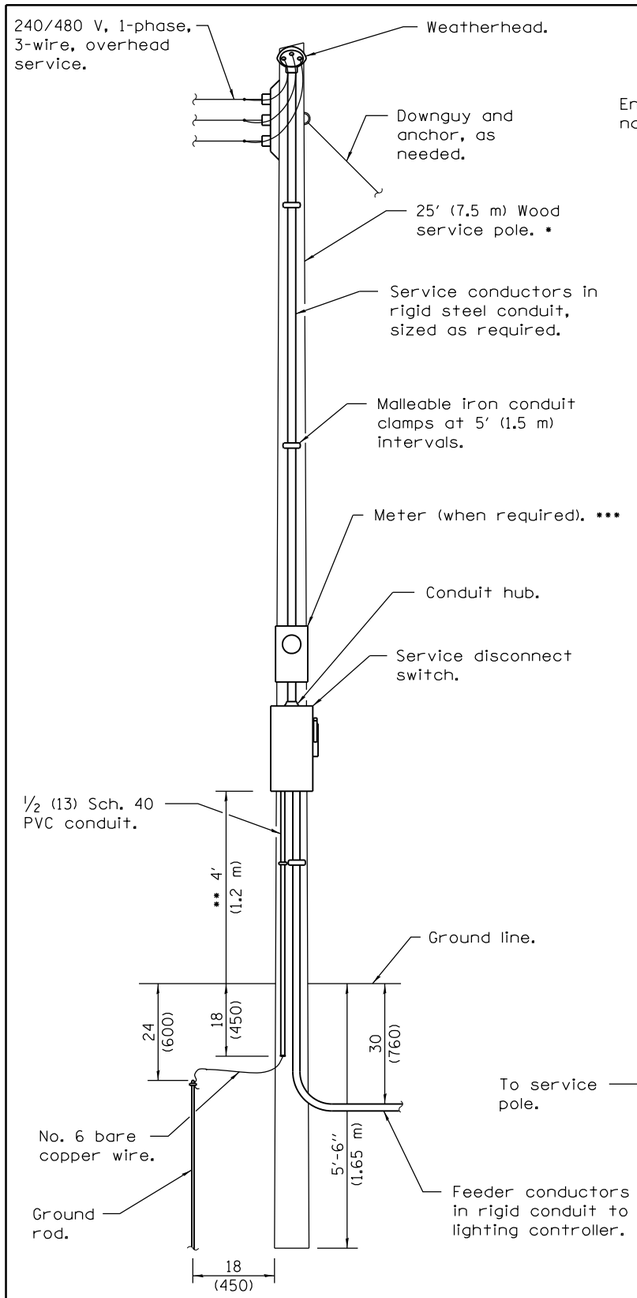


## ELECTRIC SERVICE INSTALLATION

- • Size larger as needed.
- •• Or as directed by Utility Company.
- ••• When cold sequencing is required, provide a meter disconnect switch as directed by Utility Company.

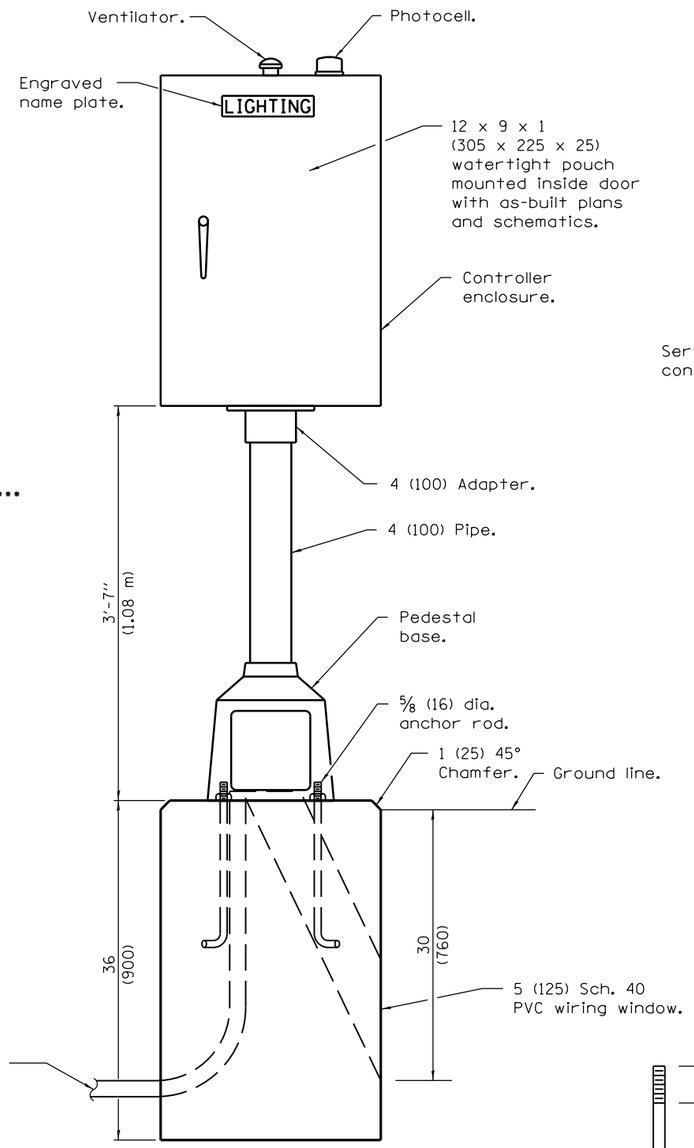


## LIGHTING CONTROLLER

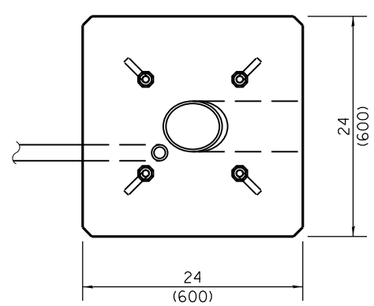


## FOUNDATION (PLAN)

(Work pad not shown.)

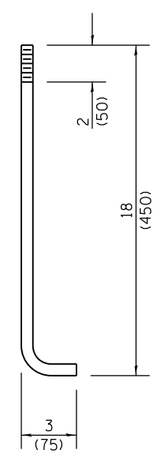


## ANCHOR ROD DETAIL

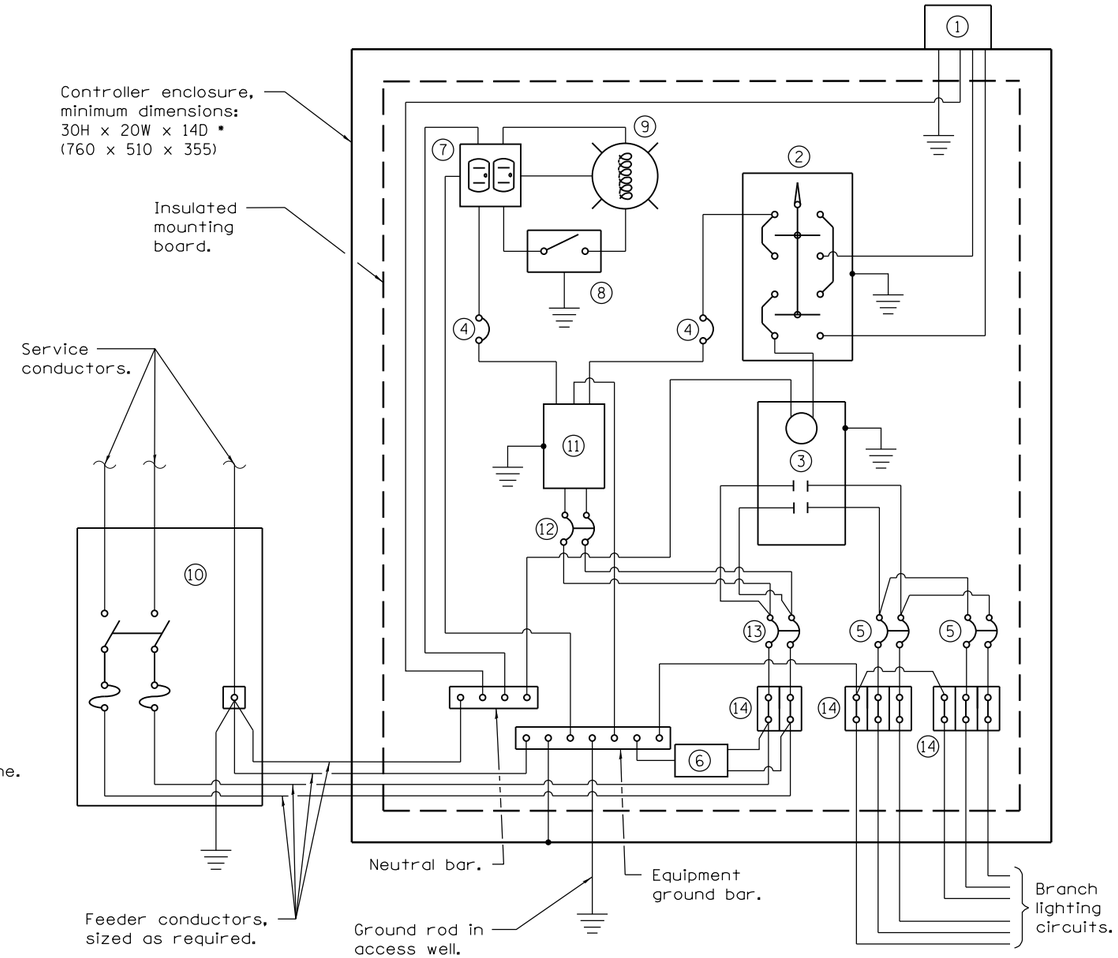


## CONTROL SCHEMATIC

1. Photocell with integral surge arrester.
2. HAND-OFF-AUTO selector switch.
3. 100 amp•, electrically held contactor.
4. 15 amp, 1-pole circuit breaker.
5. 20 amp•, 2-pole circuit breaker (two spares required but not shown).
6. Surge arrester.
7. GFCI duplex receptacle.
8. Single-pole, single-throw switch.
9. Incandescent luminaire, enclosed and gasketted with 100 watt lamp.
10. Service disconnect switch - 2-pole, 3-wire, 60 amp•, fused at 60 amp•, solid neutral in NEMA 4X enclosure having lockable external handle.
11. Transformer - 1KVA•, 480V primary, 120/240V secondary, single-phase, 60Hz.
12. 15 amp, 2-pole circuit breaker.
13. 60 amp•, 2-pole circuit breaker.
14. Terminal block sized for conductors as shown on plans.

• Size larger as needed.

All dimensions are in inches (millimeters) unless otherwise shown.

Illinois Department of Transportation

PASSED January 1, 2015
ENGINEER OF PRELIMINARY ENGINEERING
APPROVED January 1, 2015
ENGINEER OF DESIGN AND ENVIRONMENT

ISSUED 1-1-10

| DATE | REVISIONS |
|---|---|
| 1-1-15 | Added note 14. |
| | |
| | |
| 1-1-12 | Revised feeder burial |
| | depth. |
| | |

# LIGHTING CONTROLLER PEDESTAL MOUNTED, 480V

STANDARD 825016–03

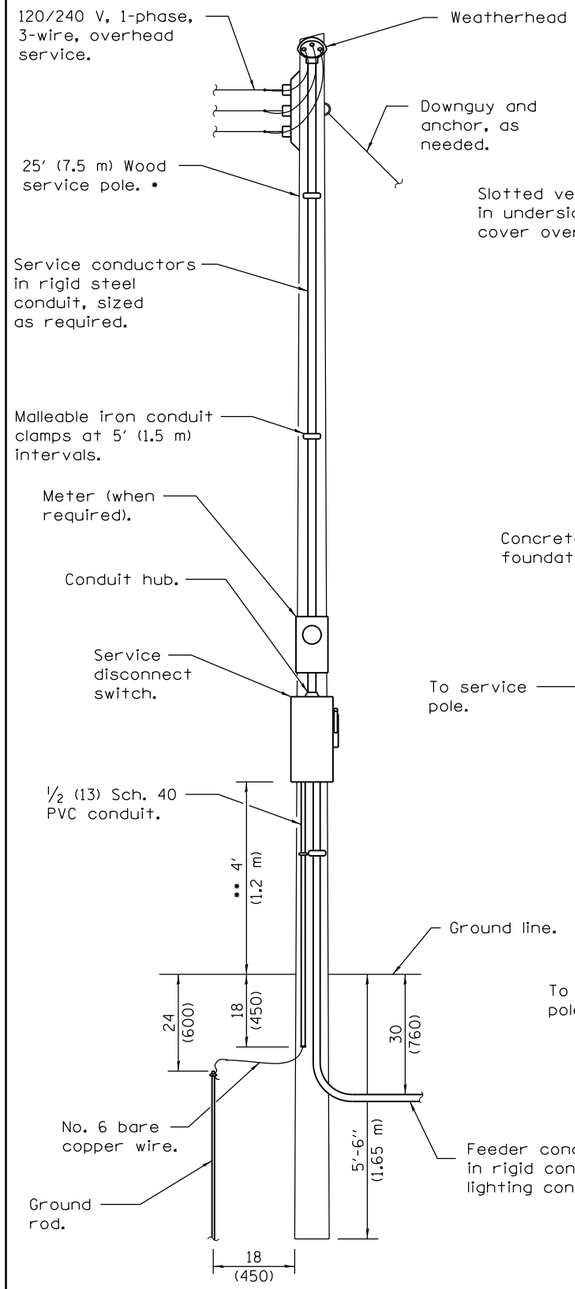


## ELECTRIC SERVICE INSTALLATION

• Size larger as needed.
•• Or as directed by Utility Company.

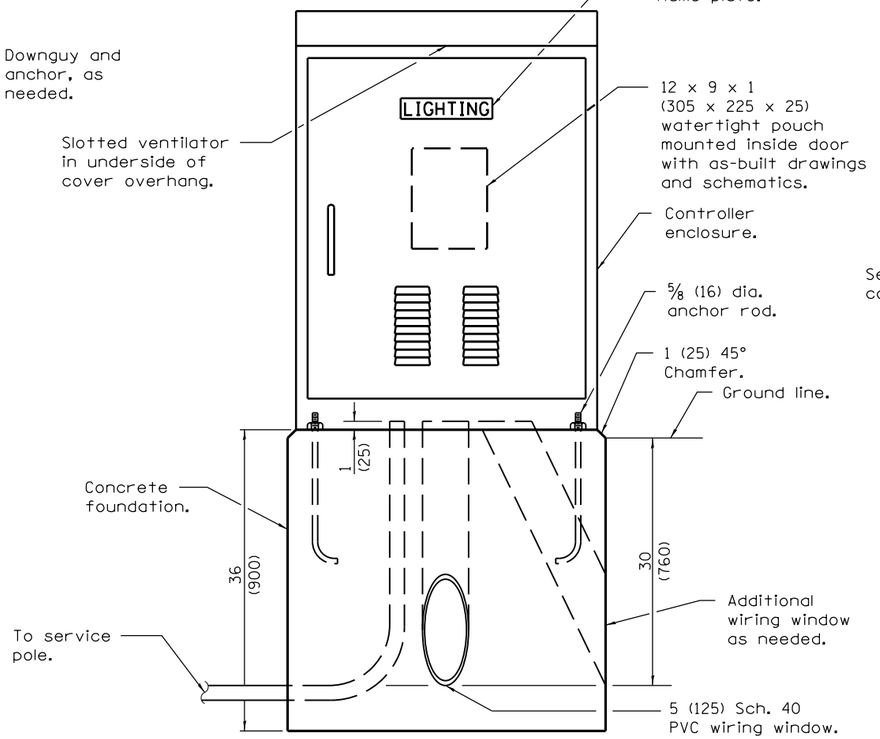


## LIGHTING CONTROLLER

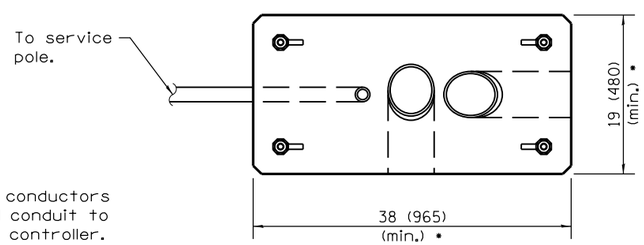


## FOUNDATION (PLAN)

(Work pad not shown.)

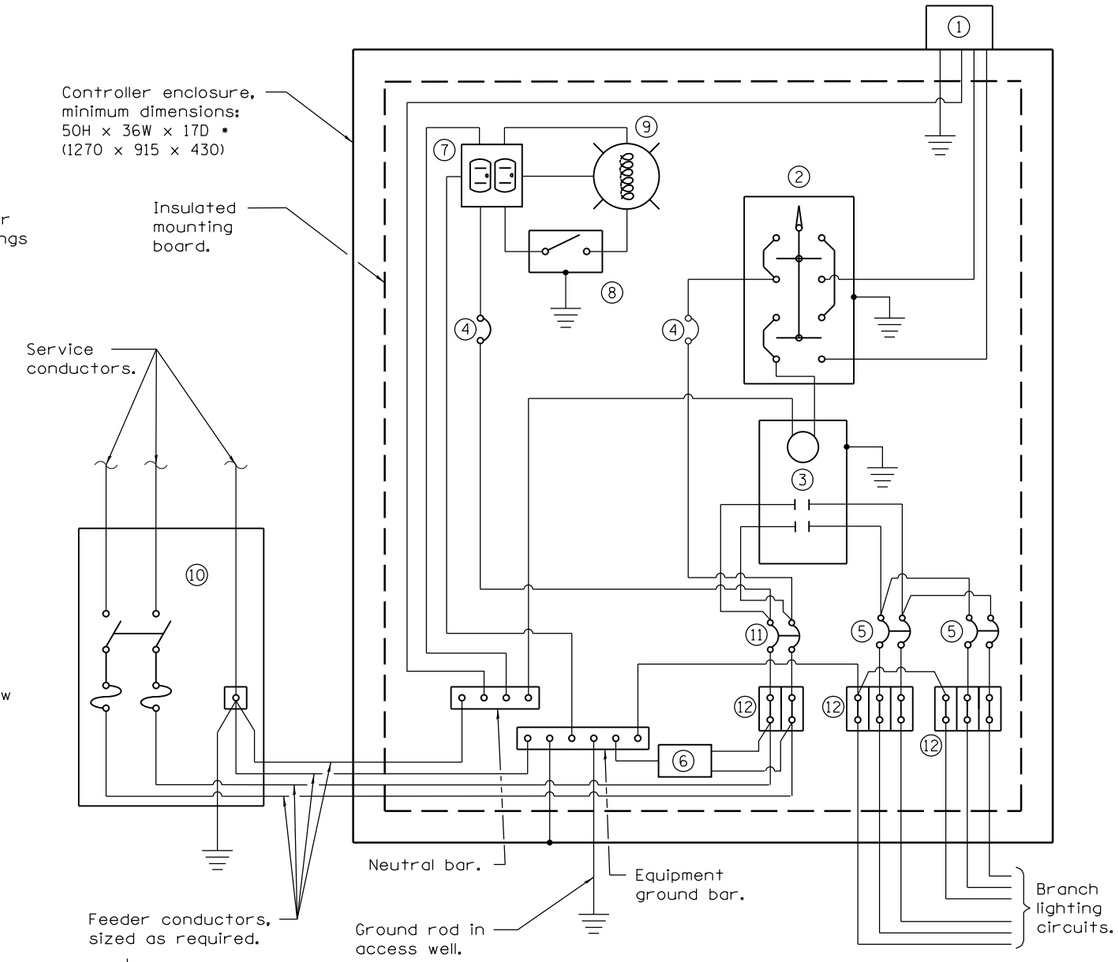


## CONTROL SCHEMATIC

1. Photocell with integral surge arrester.
2. HAND-OFF-AUTO selector switch.
3. 100 amp•, electrically held contactor.
4. 15 amp, 1-pole circuit breaker.
5. 20 amp•, 2-pole circuit breaker (two spares required but not shown).
6. Surge arrester.
7. GFCI duplex receptacle.
8. Single-pole, single-throw switch.
9. Incandescent luminaire, enclosed and gasketted with 100 watt lamp.
10. Service disconnect switch - 2-pole, 3-wire, 100 amp•, fused at 100 amp•, solid neutral in NEMA 4X enclosure having lockable external handle.
11. 100 amp•, 2-pole circuit breaker.
12. Terminal block sized for conductors as shown on plans.

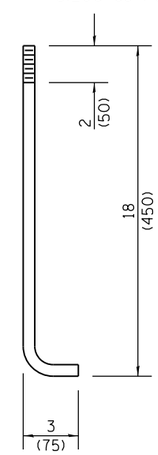


## ANCHOR ROD DETAIL

• Size larger as needed.

All dimensions are in inches (millimeters) unless otherwise shown.

| DATE | REVISIONS |
|---|---|
| 1-1-15 | Added note 12. |
| | |
| | |
| 1-1-12 | Revised feeder burial |
| | depth. |
| | |

# LIGHTING CONTROLLER BASE MOUNTED, 240V

**STANDARD 825021–03**

Illinois Department of Transportation

PASSED January 1, 2015
ENGINEER OF PRELIMINARY ENGINEERING

APPROVED January 1, 2015
ENGINEER OF DESIGN AND ENVIRONMENT

ISSUED 1-1-10

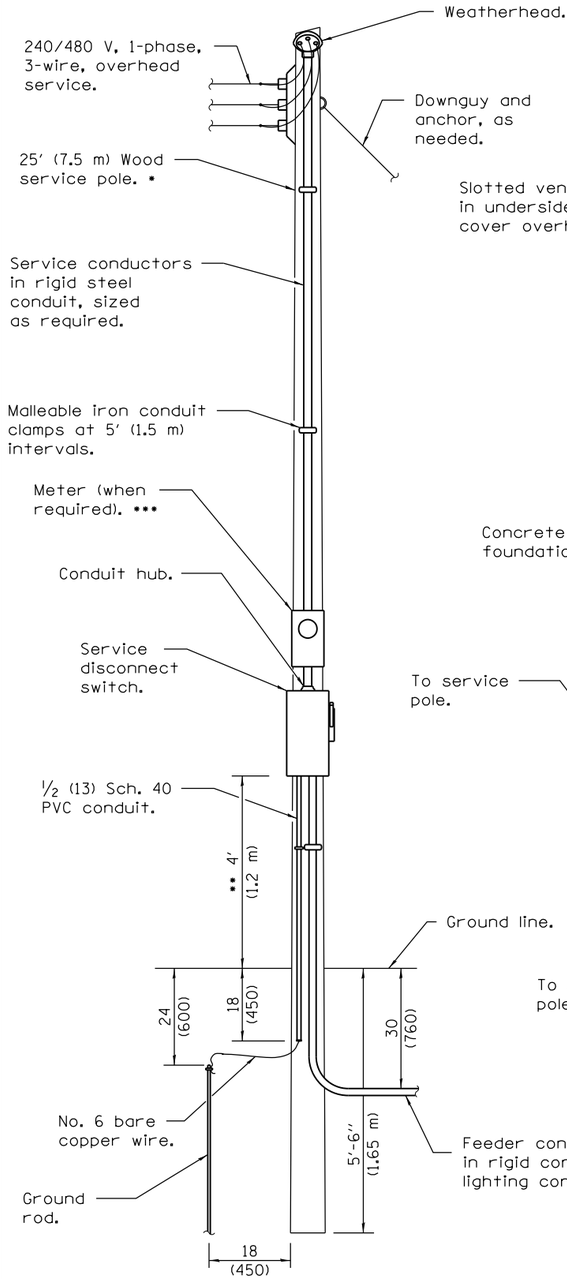


## ELECTRIC SERVICE INSTALLATION

- • Size larger as needed.
- •• Or as directed by Utility Company.
- ••• When cold sequencing is required, provide a meter disconnect switch as directed by Utility Company.

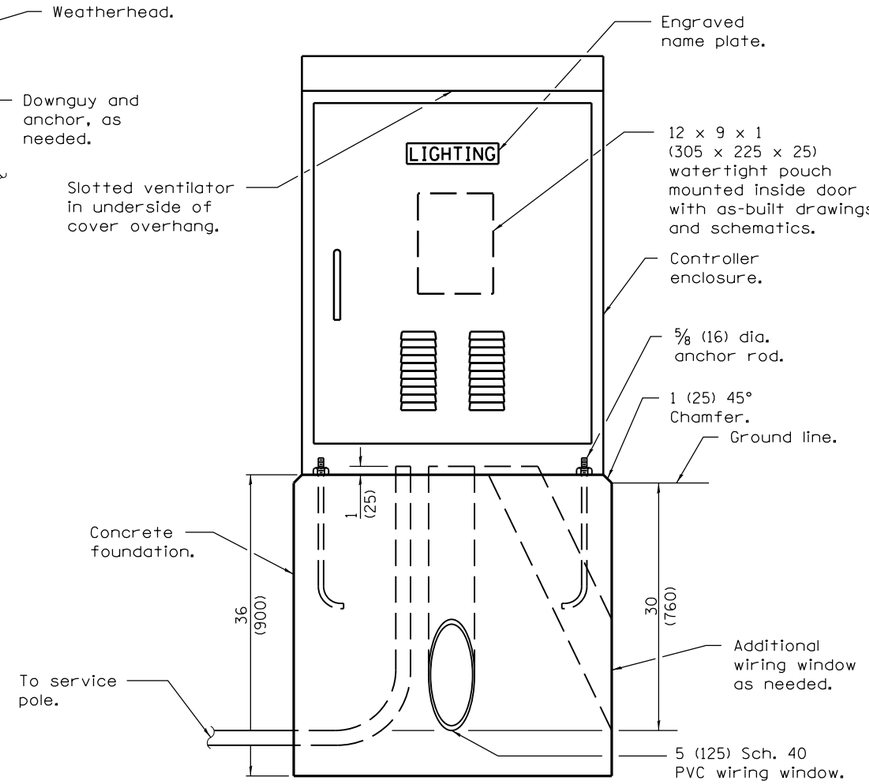


## LIGHTING CONTROLLER

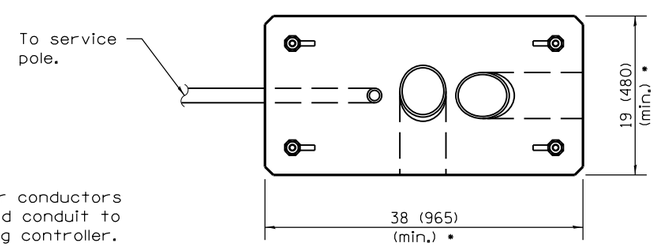


## FOUNDATION (PLAN)

(Work pad not shown.)

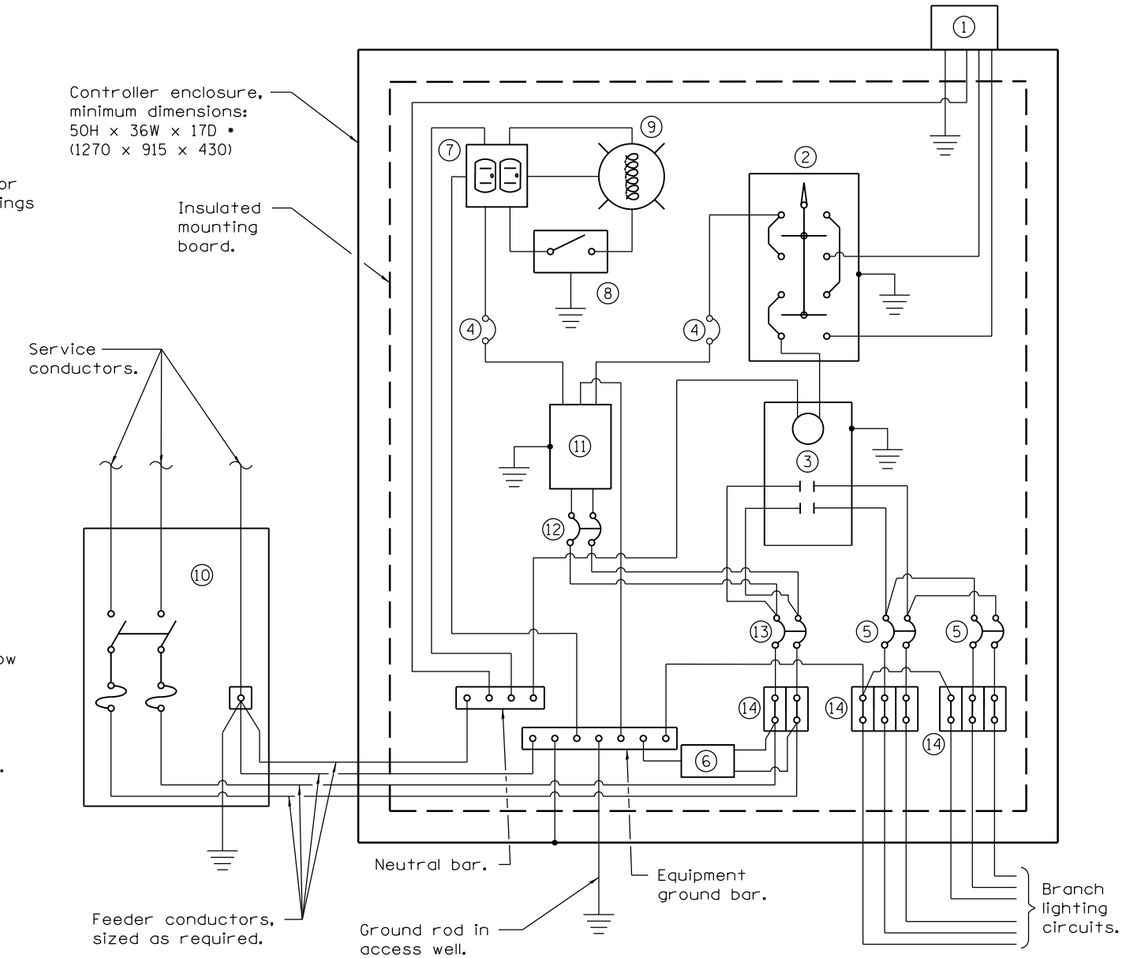


## CONTROL SCHEMATIC

1. Photocell with integral surge arrester.
2. HAND-OFF-AUTO selector switch.
3. 100 amp•, electrically held contactor.
4. 15 amp, 1-pole circuit breaker.
5. 20 amp•, 2-pole circuit breaker (two spares required but not shown).
6. Surge arrester.
7. GFCI duplex receptacle.
8. Single-pole, single-throw switch.
9. Incandescent luminaire, enclosed and gasketted with 100 watt lamp.
10. Service disconnect switch - 2-pole, 3-wire, 100 amp•, fused at 100 amp•, solid neutral in NEMA 4X enclosure having lockable external handle.
11. Transformer - 1KVA•, 480V primary, 120/240V secondary, single-phase, 60Hz.
12. 15 amp, 2-pole circuit breaker.
13. 100 amp•, 2-pole circuit breaker.
14. Terminal block sized for conductors as shown on plans.

• Size larger as needed.

All dimensions are in inches (millimeters) unless otherwise shown.

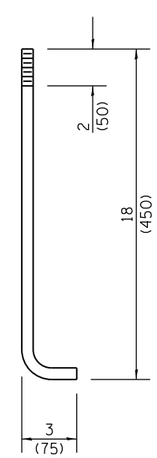


## ANCHOR ROD DETAIL

Illinois Department of Transportation

PASSED January 1, 2015
ENGINEER OF PRELIMINARY ENGINEERING
APPROVED January 1, 2015
ENGINEER OF DESIGN AND ENVIRONMENT

ISSUED 1-1-10

| DATE | REVISIONS |
|---|---|
| 1-1-15 | Added note 14. |
| | |
| | |
| 1-1-12 | Revised feeder burial |
| | depth. |
| | |

# LIGHTING CONTROLLER BASE MOUNTED, 480V

STANDARD 825026–03

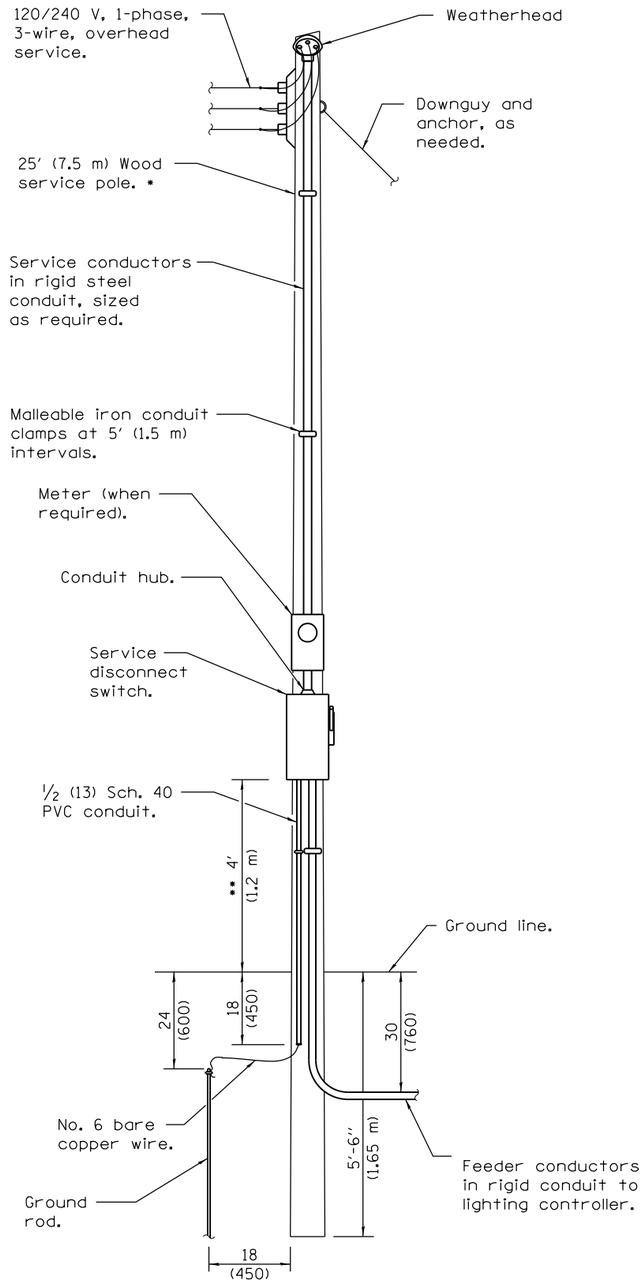


## ELECTRIC SERVICE INSTALLATION

• Size larger as needed.
•• Or as directed by Utility Company.

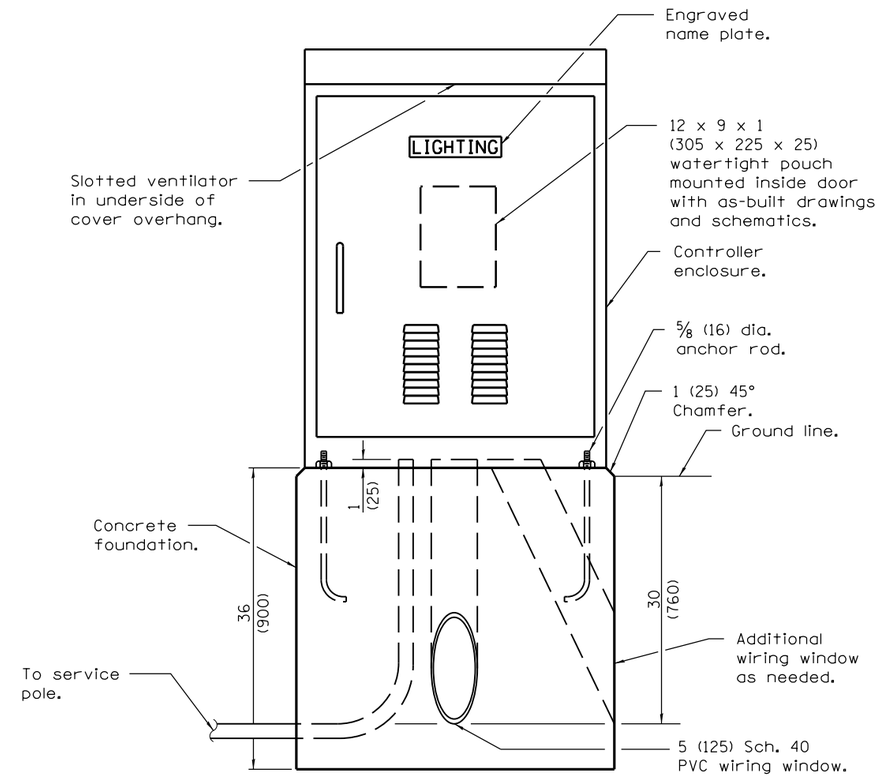


## LIGHTING CONTROLLER

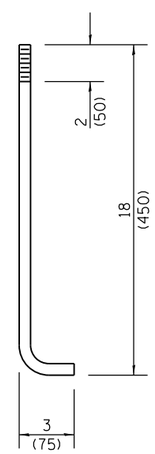


## ANCHOR ROD DETAIL

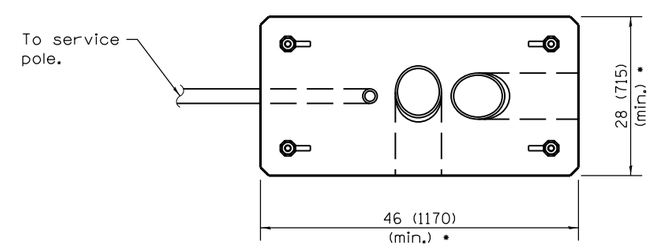


## FOUNDATION (PLAN)

(Work pad not shown.)

• Size larger as needed.

All dimensions are in inches (millimeters) unless otherwise shown.

Illinois Department of Transportation

PASSED January 1, 2015
ENGINEER OF PRELIMINARY ENGINEERING

APPROVED January 1, 2015
ENGINEER OF DESIGN AND ENVIRONMENT

ISSUED 1-1-12

| DATE | REVISIONS |
|---|---|
| 1-1-15 | Added note (16). |
| | |
| | |
| 1-1-12 | New Standard. |
| | |
| | |

# NAVIGATION OBSTRUCTION LIGHTING CONTROLLER, 240V

(Sheet 1 of 2)

STANDARD 826001–01

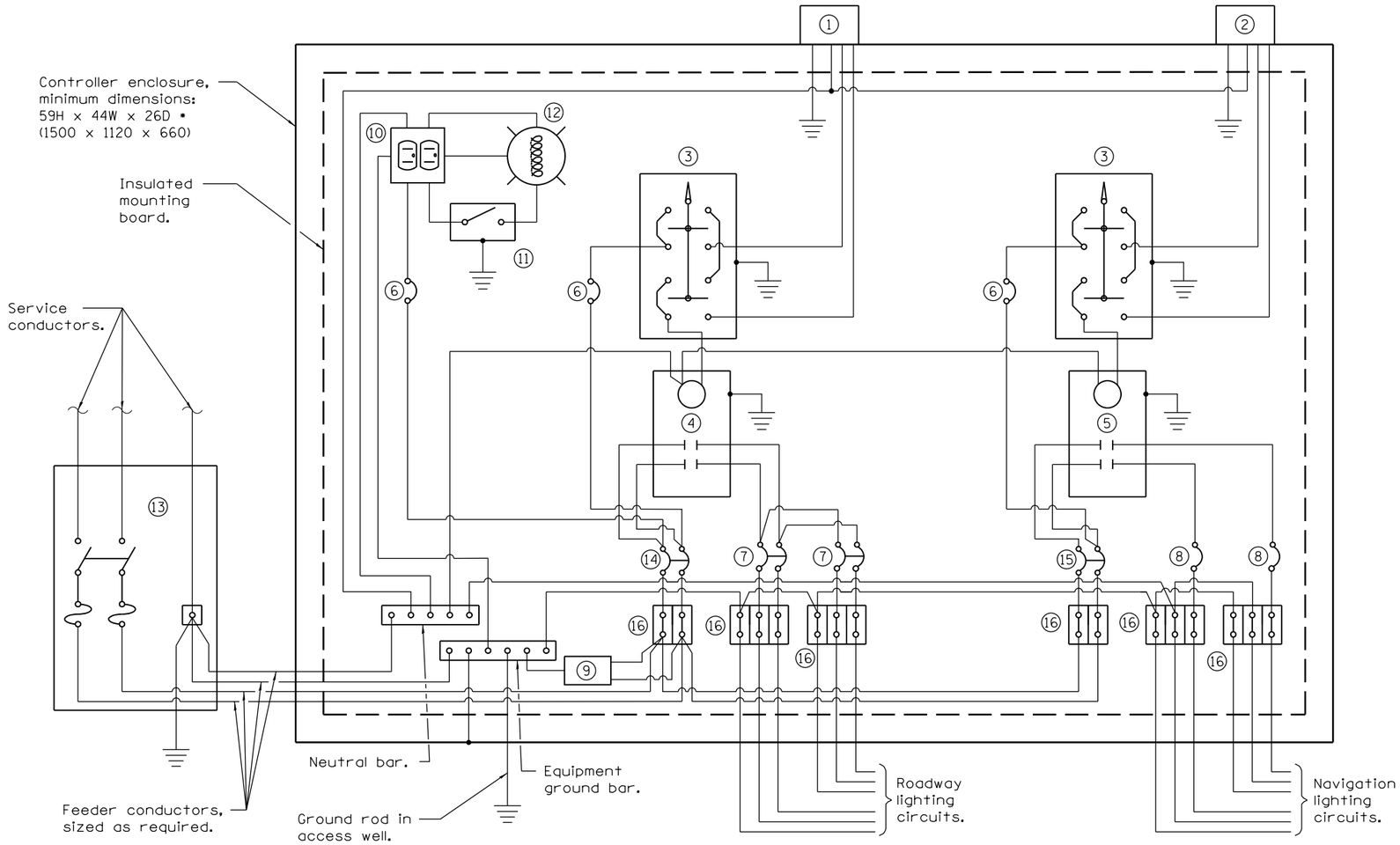


1. Photocell with integral surge arrester for roadway lighting.
2. Photocell with integral surge arrester for navigation lighting.
3. HAND-OFF-AUTO selector switch.
4. 100 amp•, electrically held contactor.
5. 60 amp•, electrically held contactor.
6. 15 amp, 1-pole circuit breaker.
7. 20 amp•, 2-pole circuit breaker (two spares required but not shown).
8. 20 amp•, single-pole circuit breaker (two shown, quantity as required).
9. Surge arrester.
10. GFCI duplex receptacle.
11. Single-pole, single-throw switch.
12. Incandescent luminaire, enclosed and gasketted with 100 watt lamp.
13. Service disconnect switch - 2-pole, 3-wire, 100 amp•, fused at 100 amp•, solid neutral in NEMA 4X enclosure having lockable external handle.
14. 60 amp•, 2-pole circuit breaker.
15. 30 amp•, 2-pole circuit breaker.
16. Terminal block sized for conductors as shown on plans.

• Size larger as needed.

**CONTROL SCHEMATIC**

Illinois Department of Transportation

PASSED January 1, 2015
ENGINEER OF PRELIMINARY ENGINEERING
APPROVED January 1, 2015
ENGINEER OF DESIGN AND ENVIRONMENT

ISSUED 1-1-12

# NAVIGATION OBSTRUCTION LIGHTING CONTROLLER, 240V

(Sheet 2 of 2)

**STANDARD 826001–01**

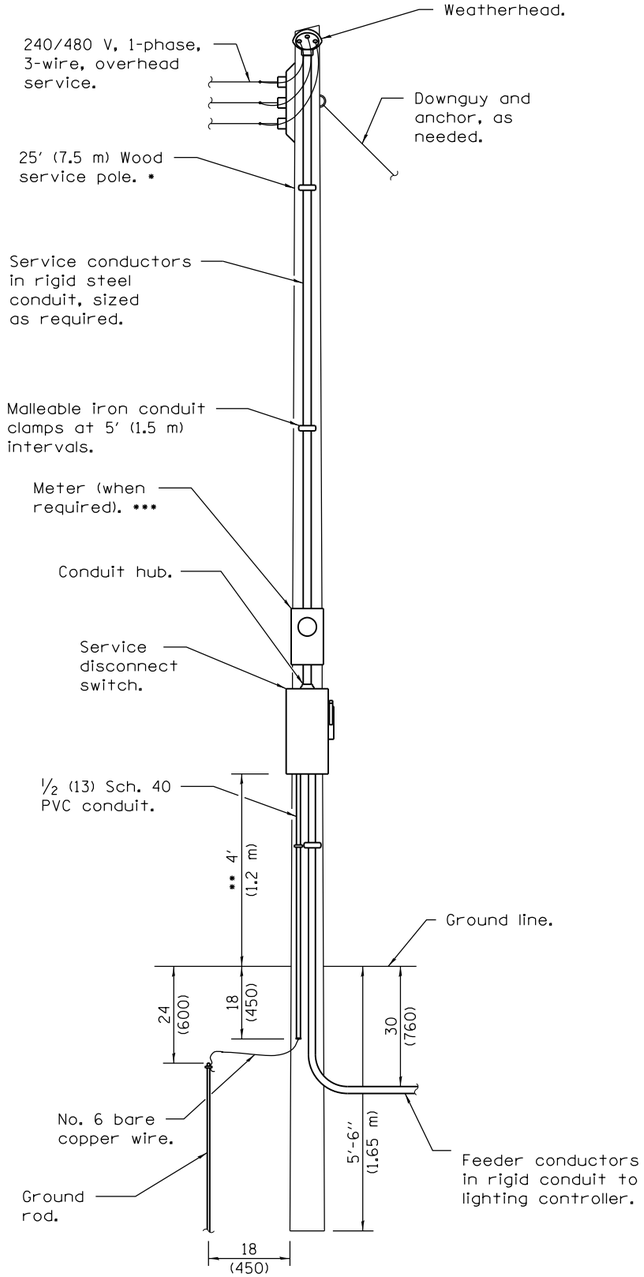


## ELECTRIC SERVICE INSTALLATION

- • Size larger as needed.
- •• Or as directed by Utility Company.
- ••• When cold sequencing is required, provide a meter disconnect switch as directed by Utility Company.

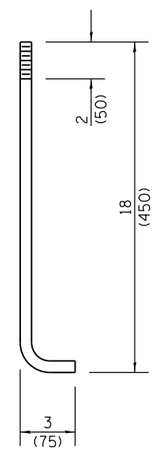


## ANCHOR ROD DETAIL

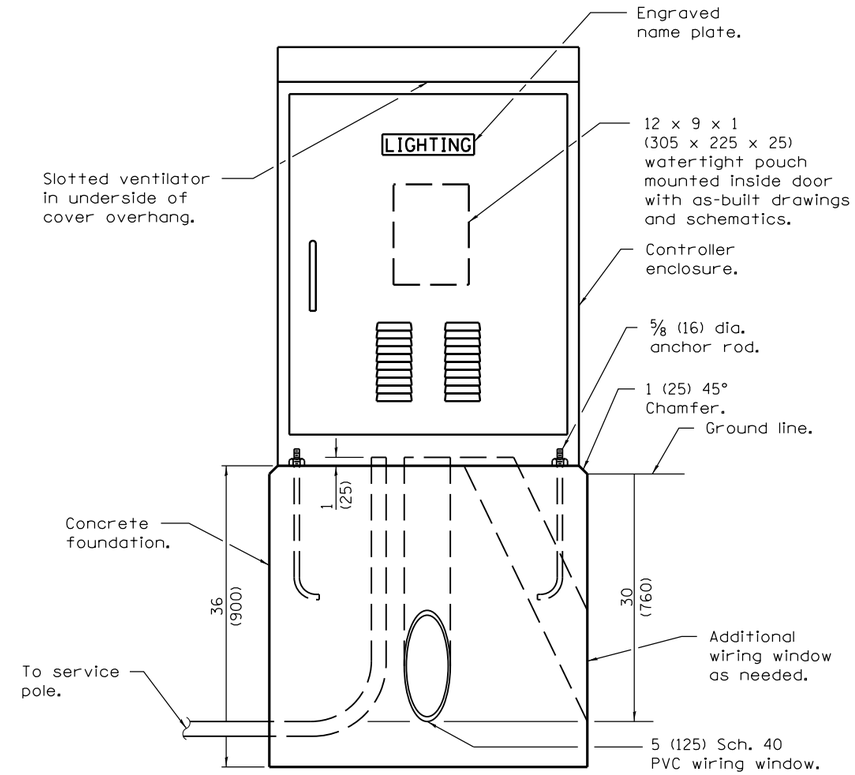


## LIGHTING CONTROLLER

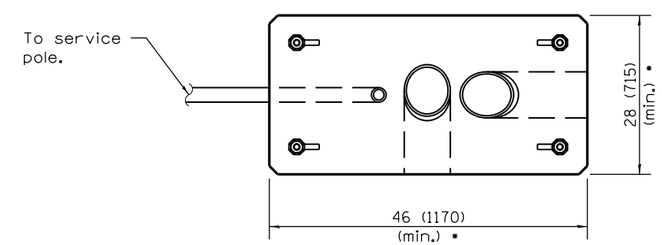


## FOUNDATION (PLAN)

(Work pad not shown.)

All dimensions are in inches (millimeters) unless otherwise shown.

| DATE | REVISIONS |
|---|---|
| 1-1-15 | Added note (18). |
| | |
| | |
| 1-1-10 | New Standard. |
| | |
| | |

# NAVIGATION OBSTRUCTION LIGHTING CONTROLLER, 480V

(Sheet 1 of 2)

**STANDARD 826006–01**

Illinois Department of Transportation

PASSED January 1, 2015
ENGINEER OF PRELIMINARY ENGINEERING

APPROVED January 1, 2015
ENGINEER OF DESIGN AND ENVIRONMENT

ISSUED 1-1-12

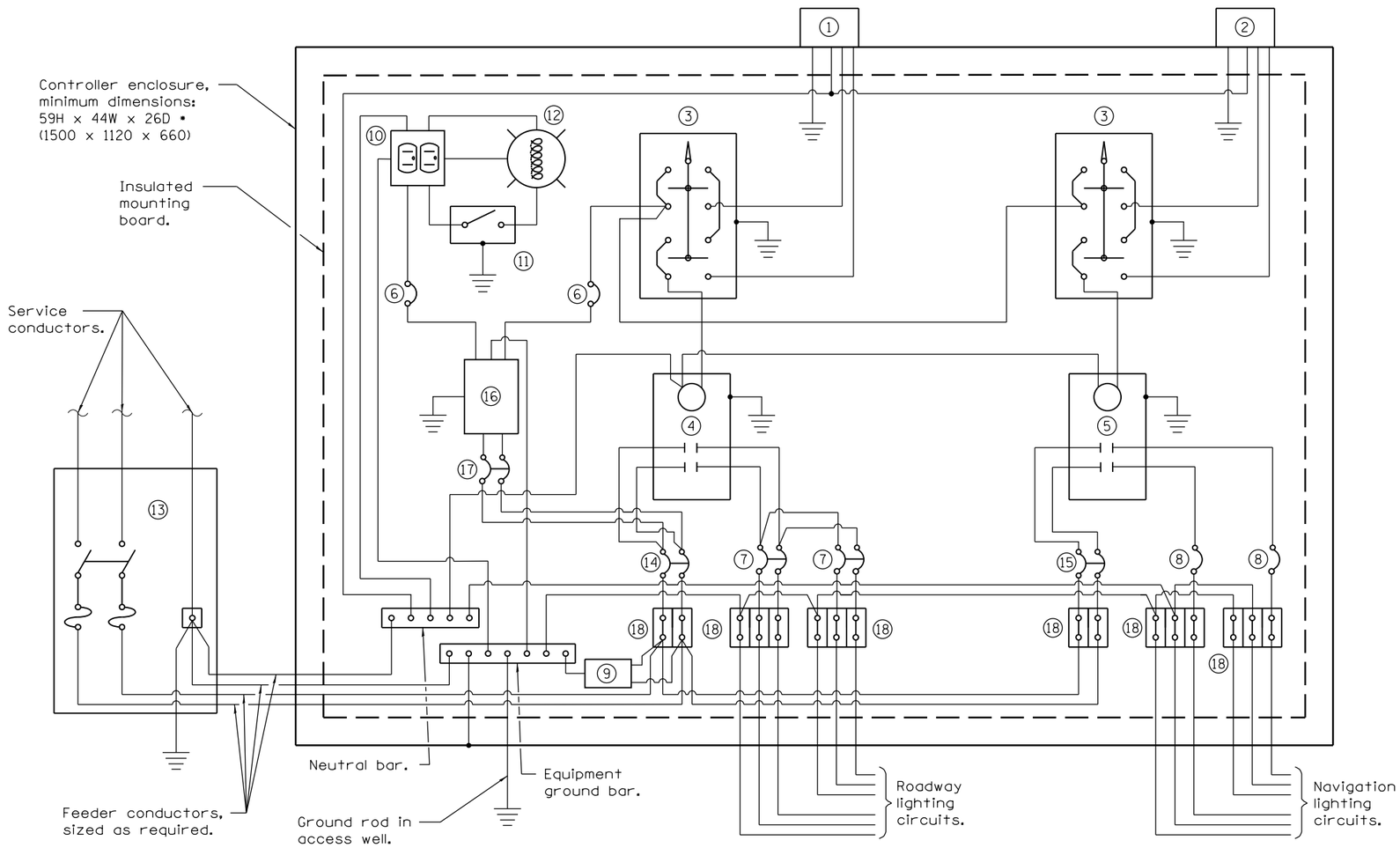


1. Photocell with integral surge arrester for roadway lighting.
2. Photocell with integral surge arrester for navigation lighting.
3. HAND-OFF-AUTO selector switch.
4. 100 amp•, electrically held contactor.
5. 60 amp•, electrically held contactor.
6. 15 amp, 1-pole circuit breaker.
7. 20 amp•, 2-pole circuit breaker (two spares required but not shown).
8. 20 amp•, single-pole circuit breaker (two shown, quantity as required).
9. Surge arrester.
10. GFCI duplex receptacle.
11. Single-pole, single-throw switch.
12. Incandescent luminaire, enclosed and gasketted with 100 watt lamp.
13. Service disconnect switch - 2-pole, 3-wire, 100 amp•, fused at 100 amp•, solid neutral in NEMA 4X enclosure having lockable external handle.
14. 60 amp•, 2-pole circuit breaker.
15. 30 amp•, 2-pole circuit breaker.
16. Transformer - 1 KVA•, 480V primary, 120/240V secondary, single phase, 60 Hz.
17. 15 amp, 2-pole circuit breaker.
18. Terminal block sized for conductors as shown on plans.

• Size larger as needed.

## CONTROL SCHEMATIC

Illinois Department of Transportation

PASSED January 1, 2015
ENGINEER OF PRELIMINARY ENGINEERING
APPROVED January 1, 2015
ENGINEER OF DESIGN AND ENVIRONMENT

ISSUED 1-1-12

# NAVIGATION OBSTRUCTION LIGHTING CONTROLLER, 480V

(Sheet 2 of 2)

STANDARD 826006–01

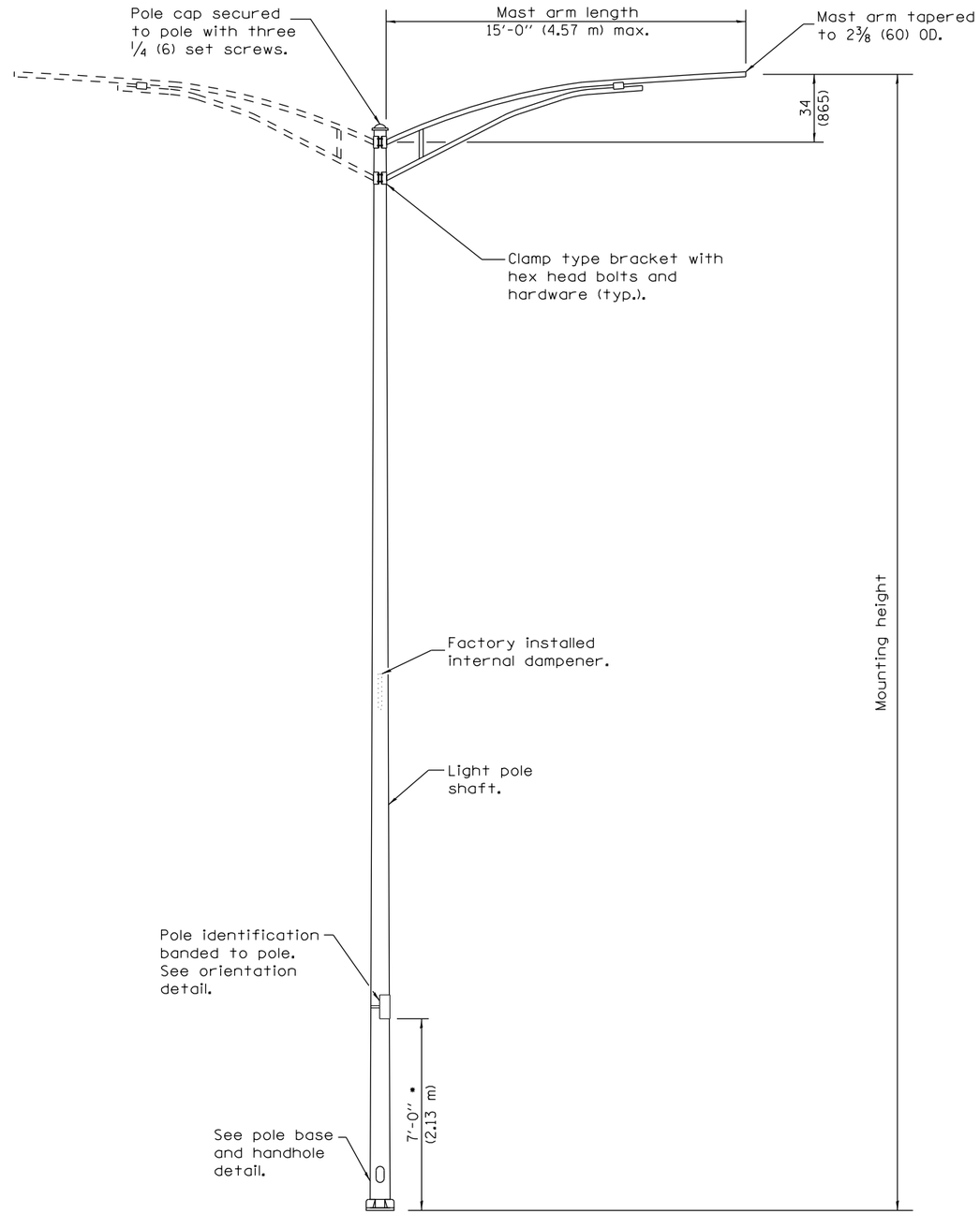


## MAST ARM LIGHT POLE

(Single or twin mount)

• Unless directed otherwise by the Engineer.

| POLE | | |
|---|---|---|
| MOUNTING HEIGHT | MINIMUM SHAFT DIAMETER | MINIMUM WALL THICKNESS |
| 35' (10.7 m) or less | 8 tapered to 4 1/2 (200 to 114) | 0.25 (6) |
| Greater than 35' (10.7 m) to 45' (13.7 m) | 10 tapered to 6 (250 to 150) | 0.25 (6) |
| Greater than 45' (13.7 m) to 50' (15.2 m) | 10 tapered to 6 (250 to 150) | 0.312 (8) |

| POLE BASE | |
|---|---|
| MOUNTING HEIGHT | BOLT CIRCLE DIAMETER |
| 35' (10.7 m) or less | 11 1/2 (290) |
| Greater than 35' (10.7 m) to 50' (15.2 m) | 15 (380) |

## GENERAL NOTES

See Standard 836001 for Light Pole Foundation and grounding electrode.

See Standard 720001 for pole identification banding to pole.

Voids in light pole base shall be sealed to prevent rodent entry.

Provide breakaway devices where required.

Where anchor rods on existing bridge parapets are too short to mount poles as shown, install leveling plate directly on concrete and level with stainless steel washers.

All dimensions are in inches (millimeters) unless otherwise shown.

Illinois Department of Transportation

PASSED January 1, 2015
ENGINEER OF PRELIMINARY ENGINEERING

APPROVED January 1, 2015
ENGINEER OF DESIGN AND ENVIRONMENT

ISSUED 1-1-12

| DATE | REVISIONS |
|---|---|
| 1-1-15 | Revised note on |
| | HANDHOLE DETAIL. |
| | |
| 1-1-14 | Added pole mounted on |
| | bridge parapet. Modified |
| | attachment of screen. |

# LIGHT POLE ALUMINUM MAST ARM

(Sheet 1 of 2)

**STANDARD 830001–03**

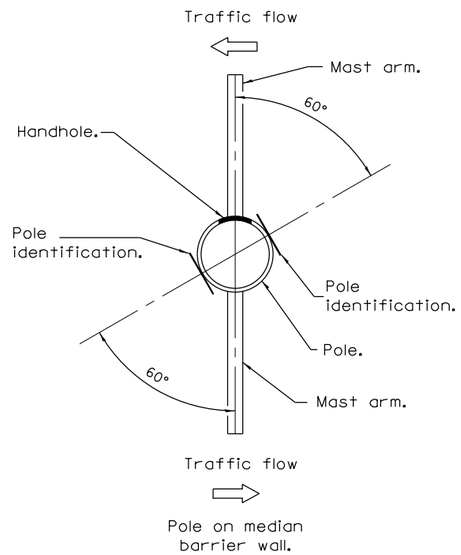


Pole on median barrier wall.

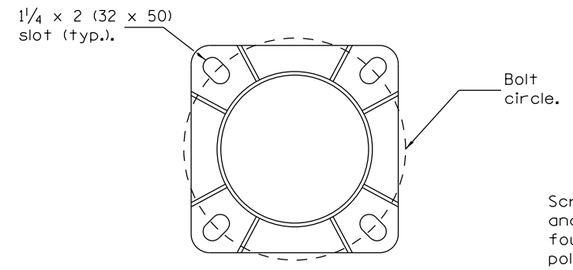


**SECTION A–A**
(Bolts not shown)

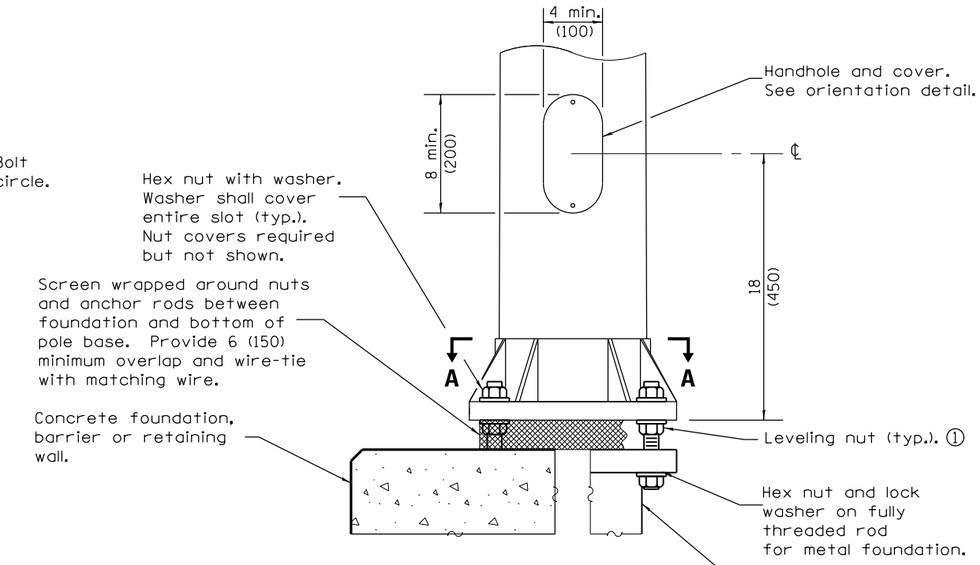


**ELEVATION AT CONCRETE FOUNDATION, METAL FOUNDATION OR RETAINING WALL**

① Omit leveling nuts when breakaway devices are required.

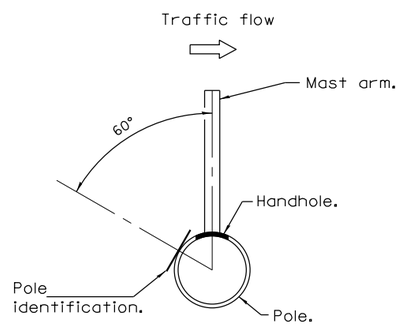


Pole on barrier wall, retaining wall or parapet.

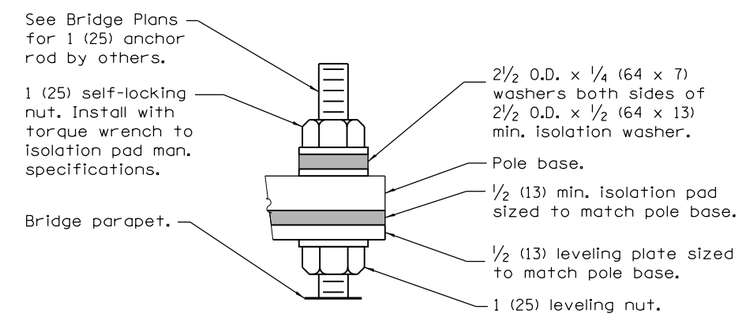


**DETAIL A**

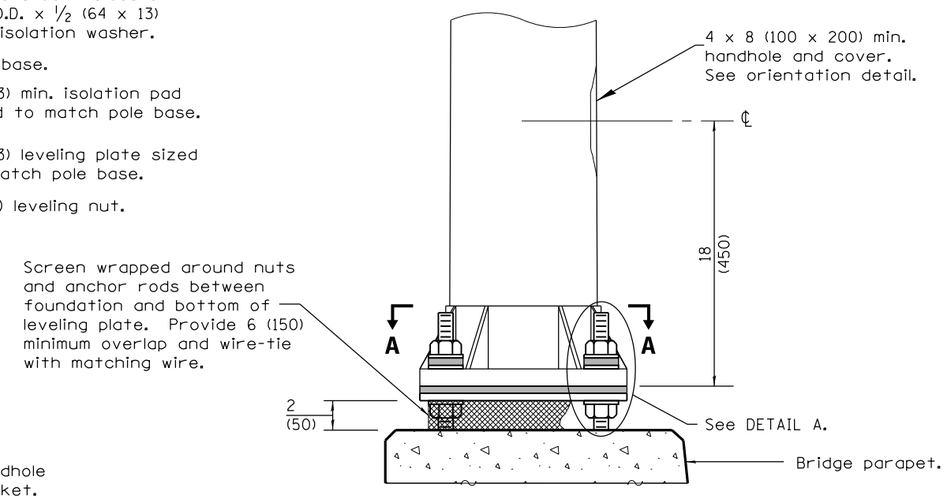


**ELEVATION AT BRIDGE PARAPET**

**POLE BASE DETAILS**

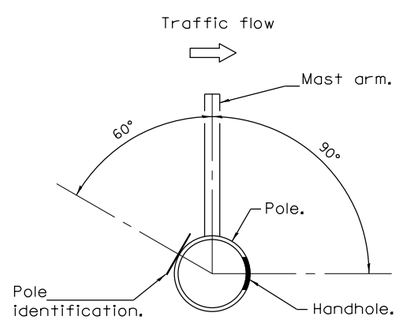


Pole on ground mounted foundation.

**HANDHOLE /IDENTIFICATION ORIENTATION DETAIL**

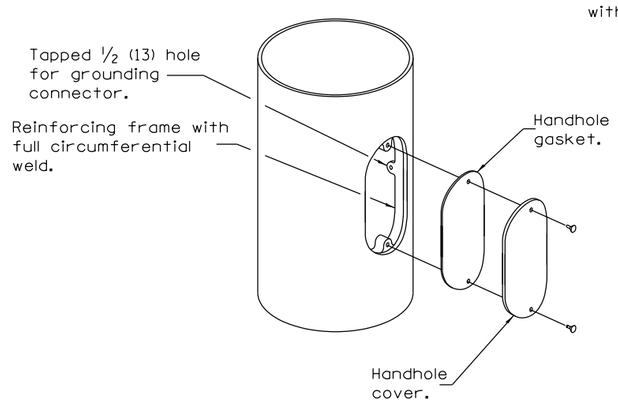


**HANDHOLE DETAIL**

Illinois Department of Transportation

PASSED January 1, 2015
ENGINEER OF PRELIMINARY ENGINEERING
APPROVED January 1, 2015
ENGINEER OF DESIGN AND ENVIRONMENT

ISSUED 1-1-12

# LIGHT POLE ALUMINUM MAST ARM

(Sheet 2 of 2)

**STANDARD 830001–03**

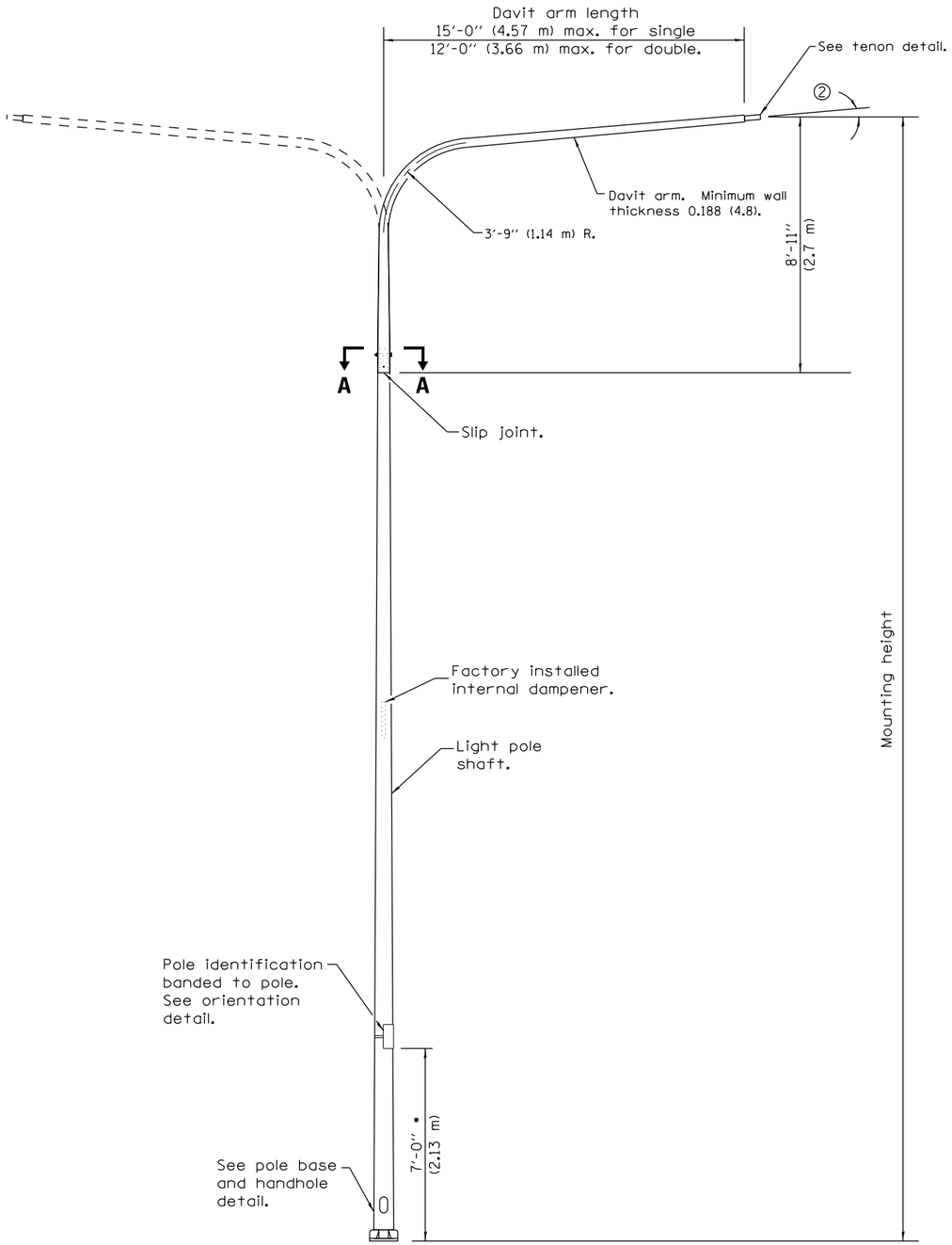


## DAVIT LIGHT POLE

(Single or twin mount)

• Unless directed otherwise by the Engineer.

| POLE BASE | |
|---|---|
| MOUNTING HEIGHT | BOLT CIRCLE DIAMETER |
| 35' (10.7 m) or less | 11½ (290) |
| Greater than 35' (10.7 m) to 50' (15.2 m) | 15 (380) |

| POLE LOWER SHAFT | | | |
|---|---|---|---|
| MOUNTING HEIGHT | LOWER SHAFT LENGTH ① | MINIMUM SHAFT DIAMETER | MINIMUM WALL THICKNESS |
| 30' (9.1 m) | 21'-1" (6.4 m) | 8 tapered to 6 (200 to 114) | 0.25 (6) |
| 35' (10.7 m) | 26'-1" (7.9 m) | 8 tapered to 6 (200 to 114) | 0.25 (6) |
| 40' (12.2 m) | 31'-1" (9.5 m) | 10 tapered to 6 (250 to 150) | 0.25 (6) |
| 45' (13.7 m) | 36'-1" (11.0 m) | 10 tapered to 6 (250 to 150) | 0.25 (6) |
| 50' (15.2 m) | 41'-1" (12.5 m) | 10 tapered to 6 (250 to 150) | 0.312 (8) |

① Lower shaft length shall be from the bottom of the pole base to the bottom of the slip joint.

② 5° max. for unloaded pole, 1.5° max. for loaded pole.

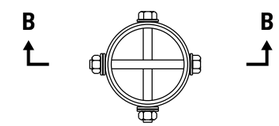


## SECTION A–A

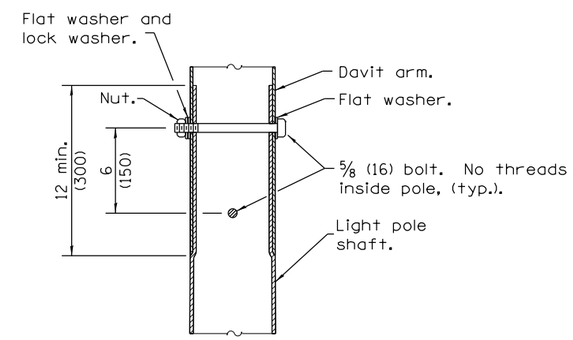


## SECTION B–B

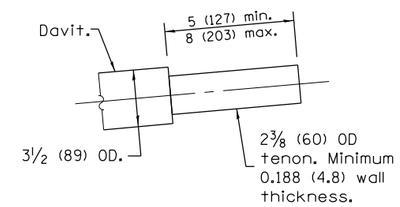


## TENON DETAIL

## GENERAL NOTES

See Standard 836001 for Light Pole Foundation and grounding electrode.

See Standard 720001 for pole identification banding to pole.

Voids in light pole base shall be sealed to prevent rodent entry.

Provide breakaway devices where required.

Where anchor rods on existing bridge parapets are too short to mount poles as shown, install leveling plate directly on concrete and level with stainless steel washers.

All dimensions are in inches (millimeters) unless otherwise shown.

Illinois Department of Transportation

PASSED January 1, 2015
ENGINEER OF PRELIMINARY ENGINEERING

APPROVED January 1, 2015
ENGINEER OF DESIGN AND ENVIRONMENT

ISSUED 1-1-12

| DATE | REVISIONS |
|---|---|
| 1-1-15 | Revised note on |
| | HANDHOLE DETAIL. |
| | |
| 1-1-14 | Added pole mounted on |
| | bridge parapet. Modified |
| | attachment of screen. |

# LIGHT POLE ALUMINUM DAVIT ARM

(Sheet 1 of 2)

STANDARD 830006–03

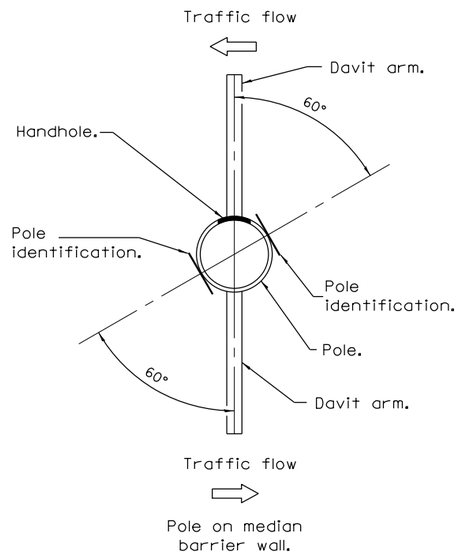


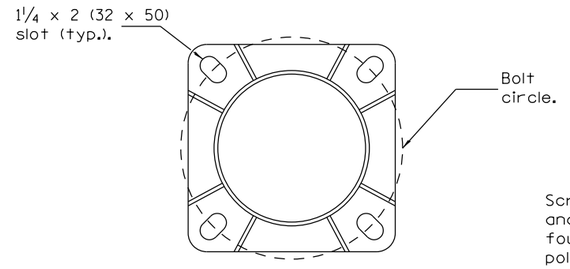


**SECTION A–A**
(Bolts not shown)

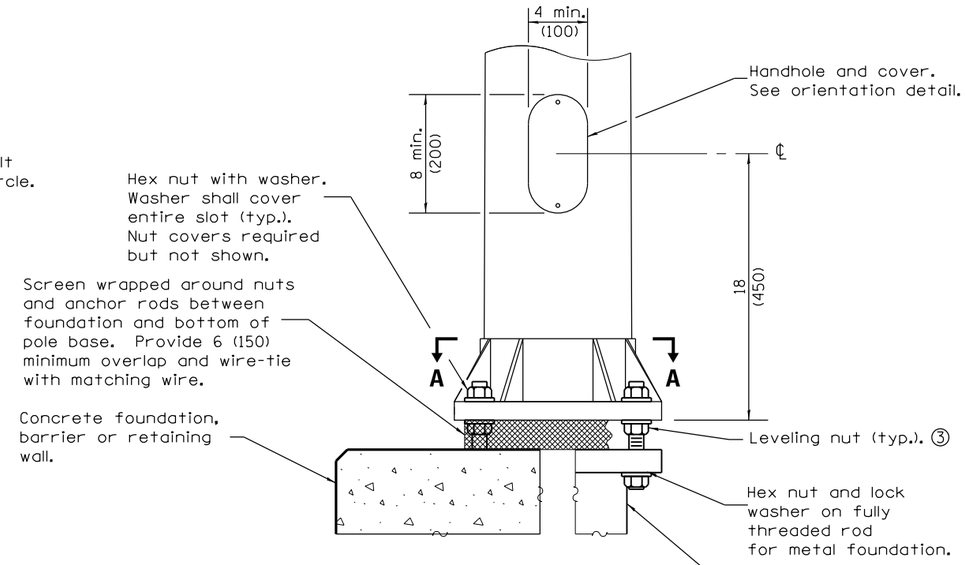


**ELEVATION AT CONCRETE FOUNDATION, METAL FOUNDATION OR RETAINING WALL**

③ Omit leveling nuts when breakaway devices are required.

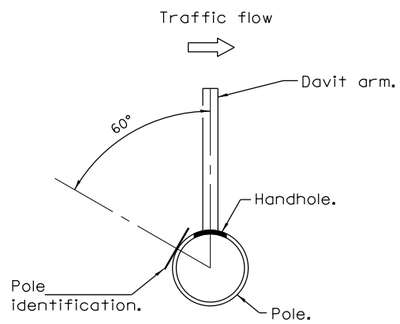


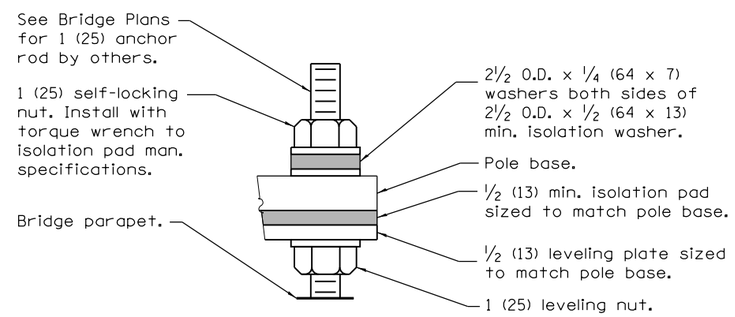


**DETAIL A**

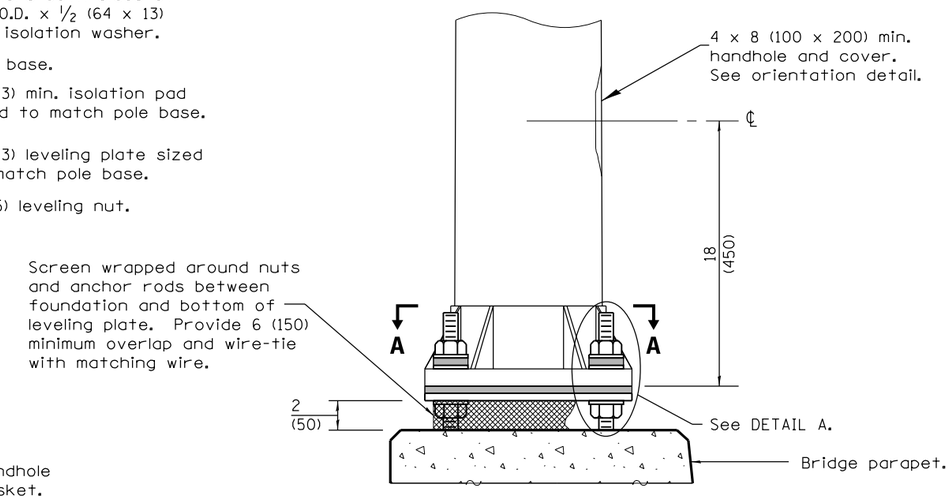


**ELEVATION AT BRIDGE PARAPET**

**POLE BASE DETAILS**

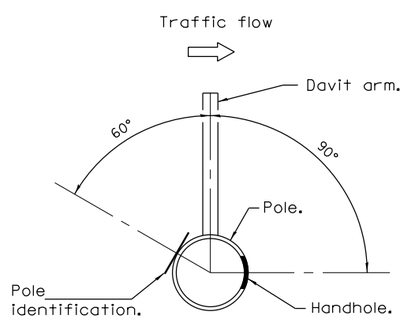


**HANDHOLE /IDENTIFICATION ORIENTATION DETAIL**

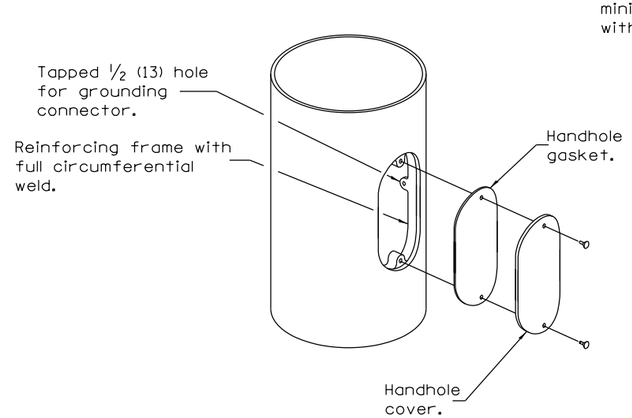


**HANDHOLE DETAIL**

Illinois Department of Transportation

PASSED January 1, 2015
ENGINEER OF PRELIMINARY ENGINEERING
APPROVED January 1, 2015
ENGINEER OF DESIGN AND ENVIRONMENT

ISSUED 1-1-12

# LIGHT POLE ALUMINUM DAVIT ARM

(Sheet 2 of 2)

**STANDARD 830006–03**

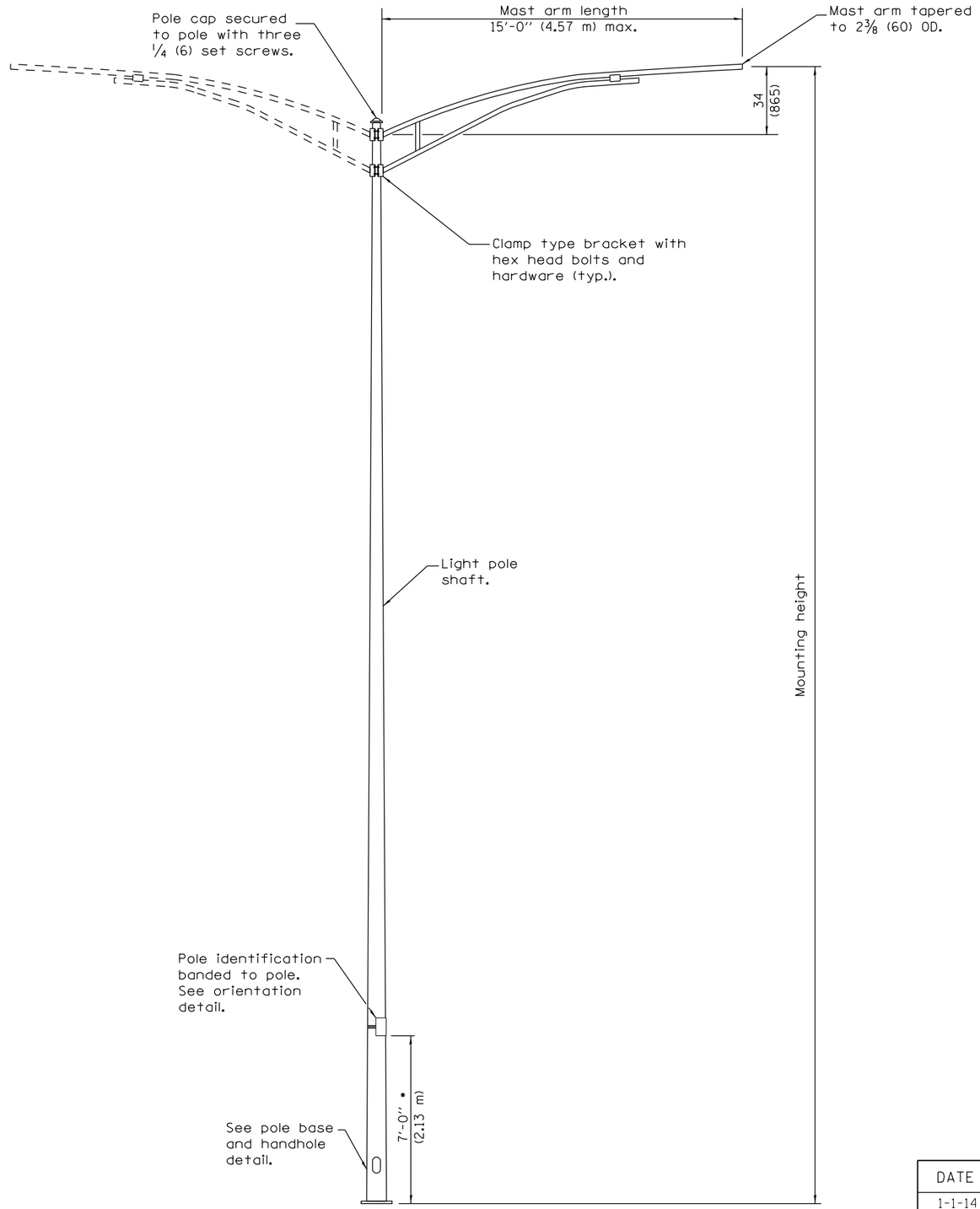


**MAST ARM**
**LIGHT POLE**

(Single or twin mount)

• Unless directed otherwise by the Engineer.

| POLE | | |
|---|---|---|
| MOUNTING HEIGHT | MINIMUM SHAFT DIAMETER | MINIMUM WALL THICKNESS |
| 35' (10.7 m) or less | 8 tapered to 4 (200 to 100) | 10 guage |
| Greater than 35' (10.7 m) to 50' (15.2 m) | 10 tapered to 4 (250 to 100) | 7 guage |
| Greater than 50' (15.2 m) to 60' (18.3 m) | 10 tapered to 4 (250 to 100) | 5 guage |

| BASE PLATE | | |
|---|---|---|
| MOUNTING HEIGHT | BOLT CIRCLE DIAMETER | BASE PLATE THICKNESS |
| 35' (10.7 m) or less | 11 1/2 (290) | 1 (25) |
| Greater than 35' (10.7 m) to 50' (15.2 m) | 15 (380) | 1 1/4 (32) |
| Greater than 50' (15.1 m) to 60' (18.3 m) | 15 (380) | 1 1/2 (40) |

## GENERAL NOTES

See Standard 836001 for Light Pole Foundation and grounding electrode.

See Standard 720001 for pole identification banding to pole.

Provide breakaway devices where required.

Where anchor rods on existing bridge parapets are too short to mount poles as shown, install leveling plate directly on concrete and level with stainless steel washers.

All dimensions are in inches (millimeters) unless otherwise shown.

Illinois Department of Transportation

PASSED January 1, 2014
ENGINEER OF PRELIMINARY ENGINEERING
APPROVED January 1, 2014
ENGINEER OF DESIGN AND ENVIRONMENT

ISSUED 1-1-12

| DATE | REVISIONS |
|---|---|
| 1-1-14 | Added pole mounted on |
| | bridge parapet. Modified |
| | attachment of screen. |
| 1-1-13 | Added 'barrier or retaining |
| | wall' to POLE BASE DETAIL. |
| | |

# LIGHT POLE STEEL MAST ARM

(Sheet 1 of 2)

**STANDARD 830011–02**

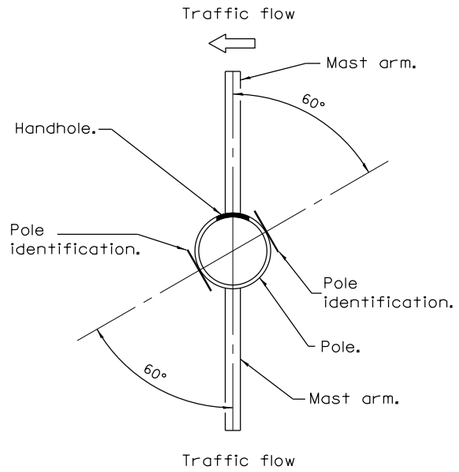


Pole on median barrier wall.

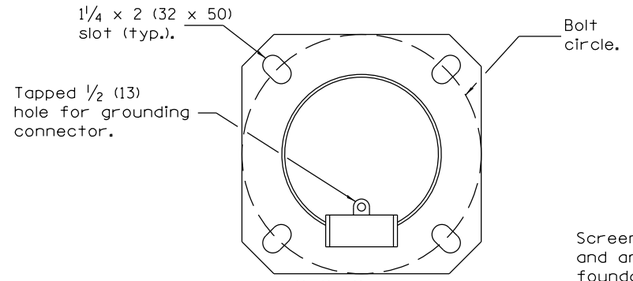


**SECTION A–A**
(Bolts not shown)

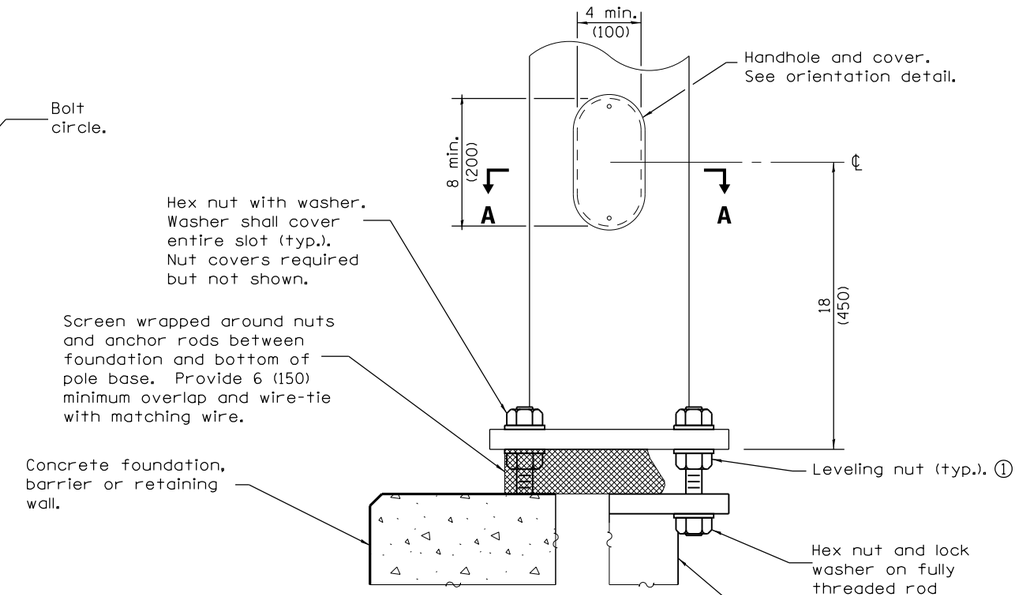


**ELEVATION AT CONCRETE FOUNDATION, METAL FOUNDATION OR RETAINING WALL**

① Omit leveling nuts when breakaway devices are required.

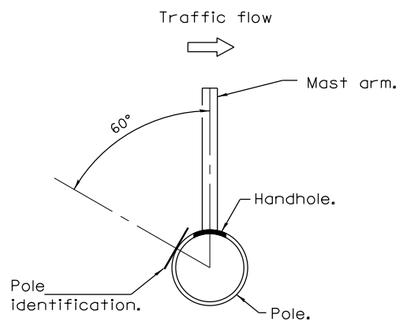


Pole on barrier wall, retaining wall or parapet.

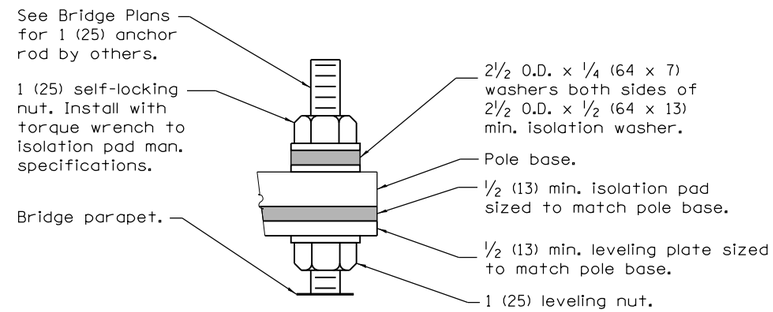


**DETAIL A**

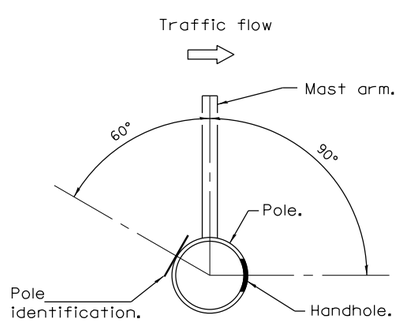


Pole on ground mounted foundation.

**HANDHOLE /IDENTIFICATION ORIENTATION DETAIL**

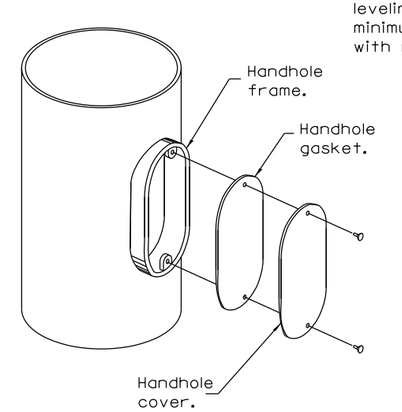


**HANDHOLE DETAIL**

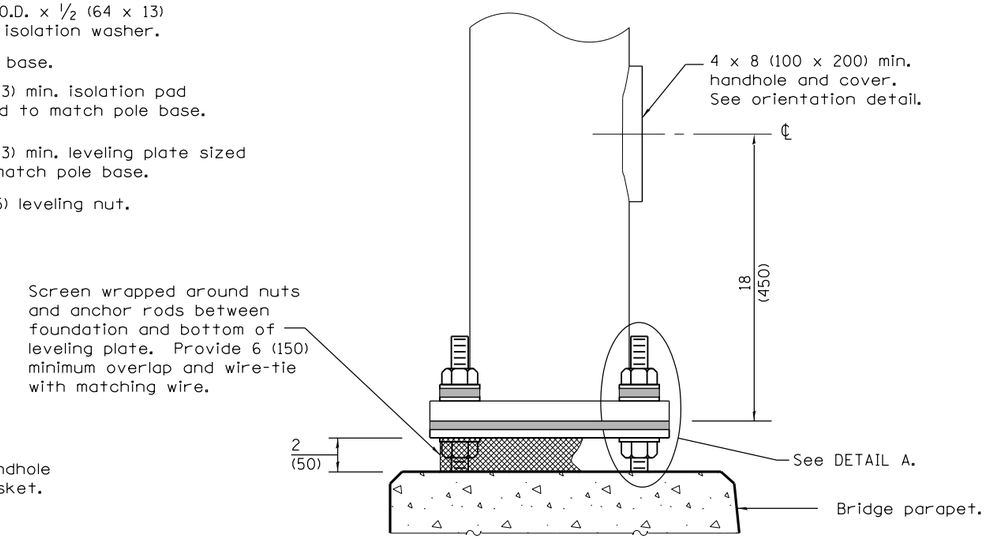


**ELEVATION AT BRIDGE PARAPET**

**POLE BASE DETAILS**

Illinois Department of Transportation

PASSED January 1, 2014
ENGINEER OF PRELIMINARY ENGINEERING
APPROVED January 1, 2014
ENGINEER OF DESIGN AND ENVIRONMENT

ISSUED 1-1-12

# LIGHT POLE STEEL MAST ARM

(Sheet 2 of 2)

**STANDARD 830011–02**

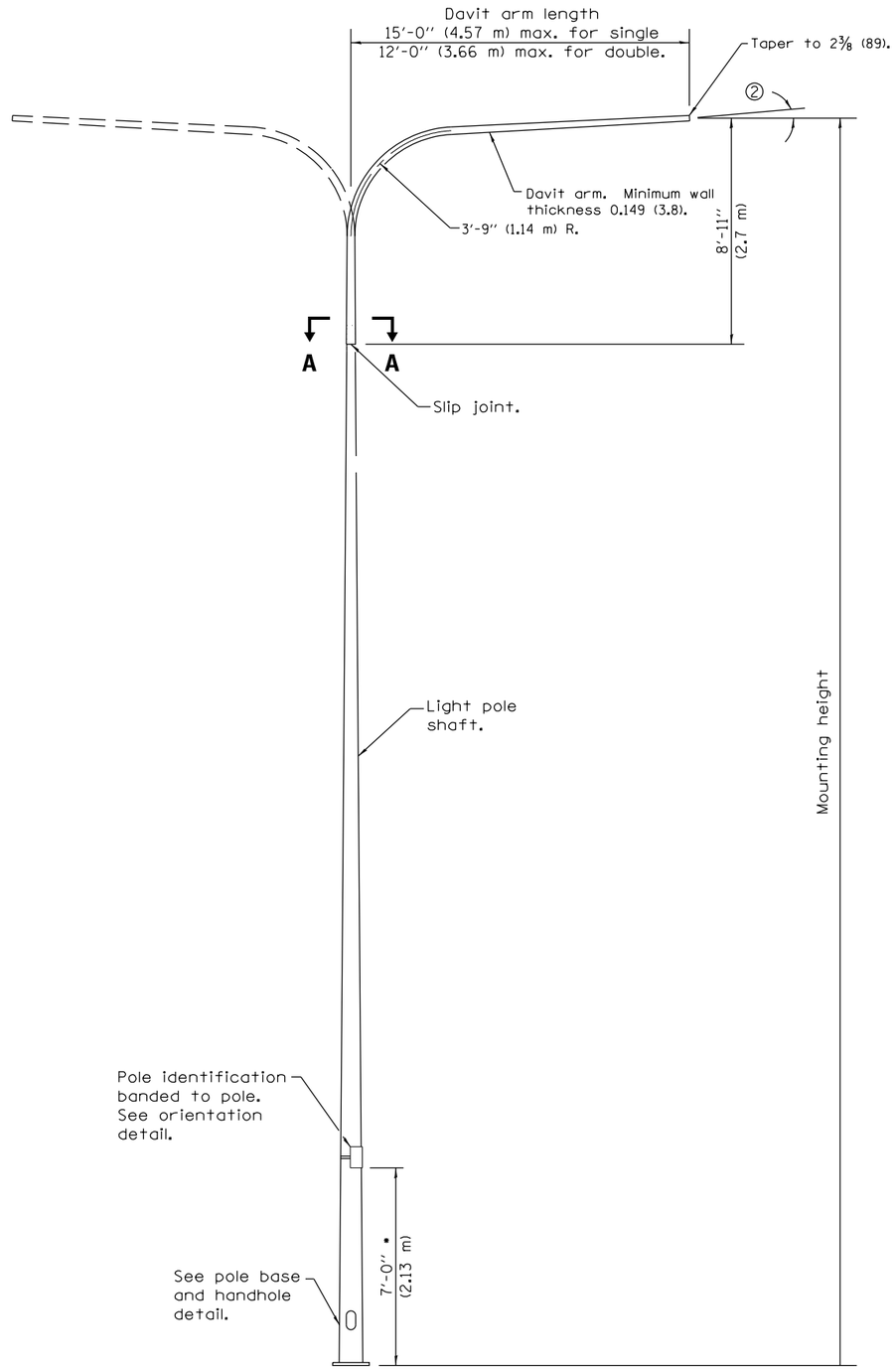


## DAVIT LIGHT POLE

(Single or twin mount)

• Unless directed otherwise by the Engineer.

| BASE PLATE | | |
|---|---|---|
| MOUNTING HEIGHT | BOLT CIRCLE DIAMETER | BASE PLATE THICKNESS |
| 35′ (10.7 m) or less | 11½ (290) | 1 (25) |
| Greater than 35′ (10.7 m) to 50′ (15.2 m) | 15 (380) | 1¼ (32) |
| Greater than 50′ (15.1 m) to 60′ (18.3 m) | 15 (380) | 1½ (40) |

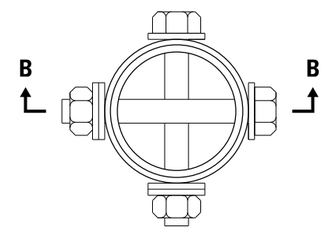


## SECTION A–A

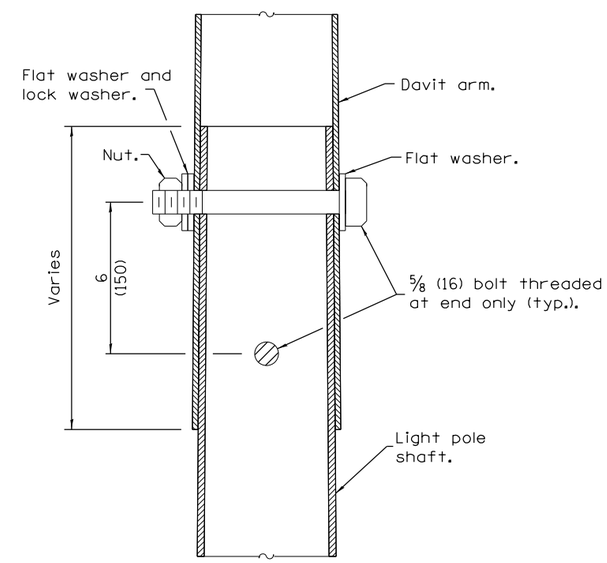


## SECTION B–B

| POLE LOWER SHAFT | | | |
|---|---|---|---|
| MOUNTING HEIGHT | LOWER SHAFT LENGTH ① | MINIMUM SHAFT DIAMETER | MINIMUM WALL THICKNESS |
| 30′ (9.1 m) | 21′-1″ (6.4 m) | 8 tapered to 6 (200 to 114) | 10 gauge |
| 35′ (10.7 m) | 26′-1″ (7.9 m) | 8 tapered to 6 (200 to 114) | 10 gauge |
| 40′ (12.2 m) | 31′-1″ (9.5 m) | 10 tapered to 6 (250 to 150) | 7 gauge |
| 45′ (13.7 m) | 36′-1″ (11.0 m) | 10 tapered to 6 (250 to 150) | 7 gauge |
| 50′ (15.2 m) | 41′-1″ (12.5 m) | 10 tapered to 6 (250 to 150) | 7 gauge |

① Lower shaft length shall be from the bottom of the pole base to the bottom of the slip joint.

② 3° max. for unloaded pole, 1.5° max. for loaded pole.

## GENERAL NOTES

See Standard 836001 for Light Pole Foundation and grounding electrode.

See Standard 720001 for pole identification banding to pole.

Provide breakaway devices where required.

Where anchor rods on existing bridge parapets are too short to mount poles as shown, install leveling plate directly on concrete and level with stainless steel washers.

All dimensions are in inches (millimeters) unless otherwise shown.

Illinois Department of Transportation

PASSED January 1, 2014
ENGINEER OF PRELIMINARY ENGINEERING
APPROVED January 1, 2014
ENGINEER OF DESIGN AND ENVIRONMENT

ISSUED 1-1-12

| DATE | REVISIONS |
|---|---|
| 1-1-14 | Added pole mounted on |
| | bridge parapet. Modified |
| | attachment of screen. |
| 1-1-13 | Added 'barrier or retaining |
| | wall' to POLE BASE DETAIL. |

# LIGHT POLE STEEL DAVIT ARM

(Sheet 1 of 2)

STANDARD 830016–02

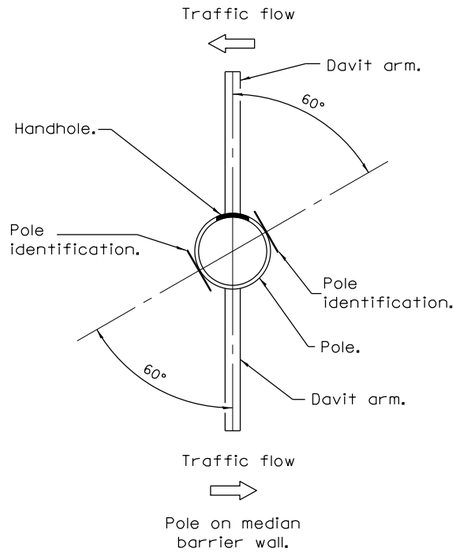


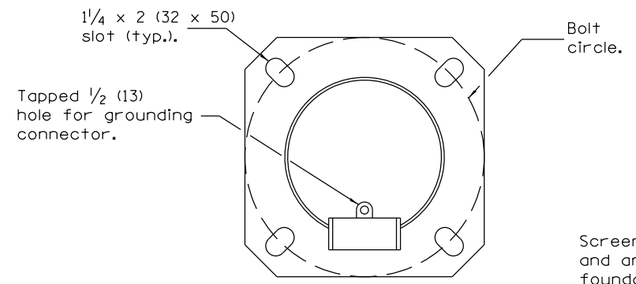


**SECTION A–A**
(Bolts not shown)

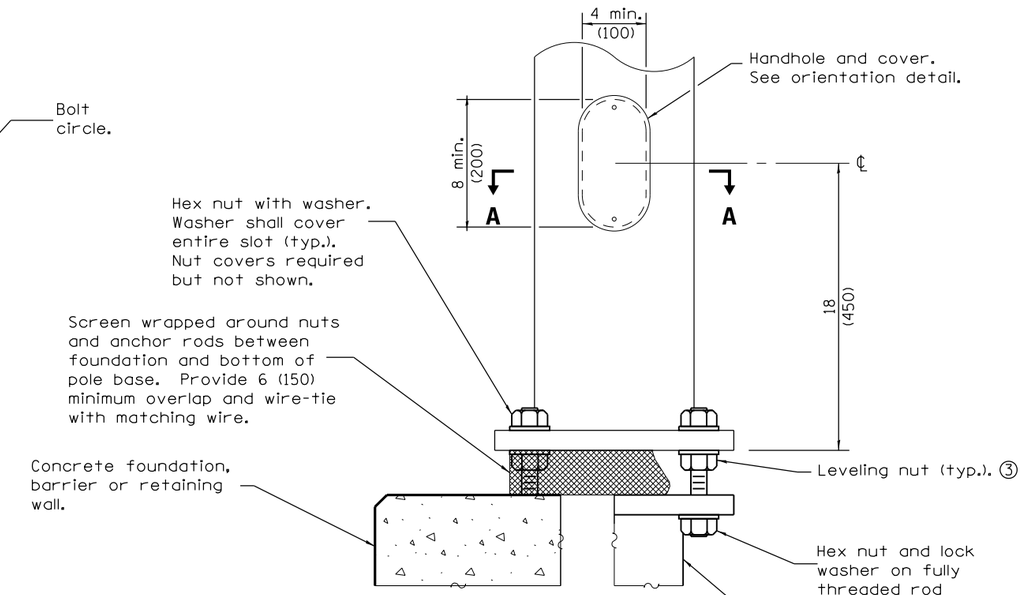


**ELEVATION AT CONCRETE FOUNDATION, METAL FOUNDATION OR RETAINING WALL**

③ Omit leveling nuts when breakaway devices are required.

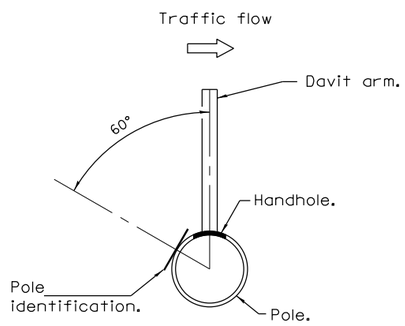


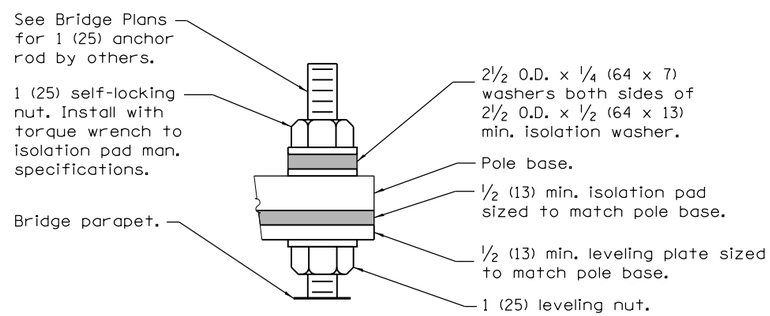


**DETAIL A**

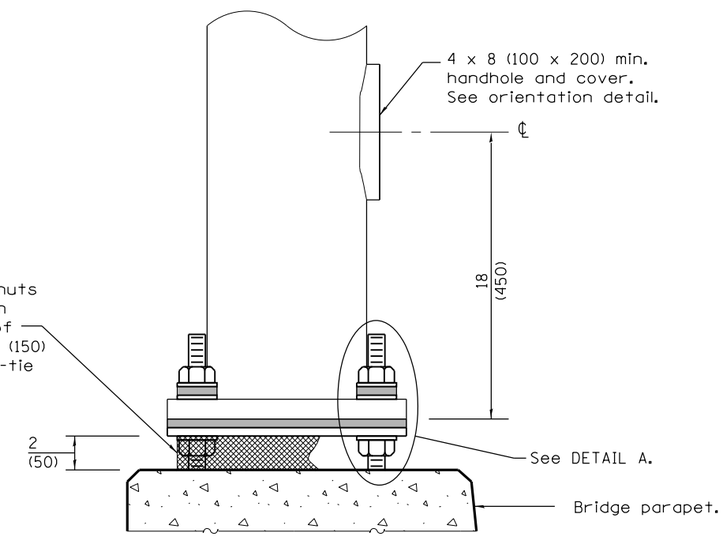


**ELEVATION AT BRIDGE PARAPET**

**POLE BASE DETAILS**

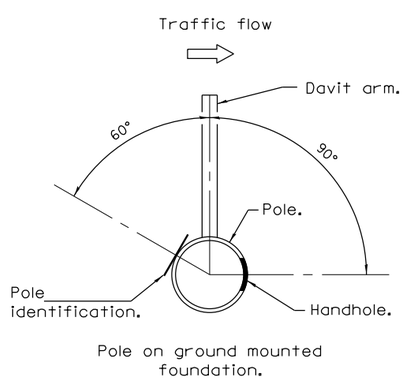


**HANDHOLE /IDENTIFICATION ORIENTATION DETAIL**

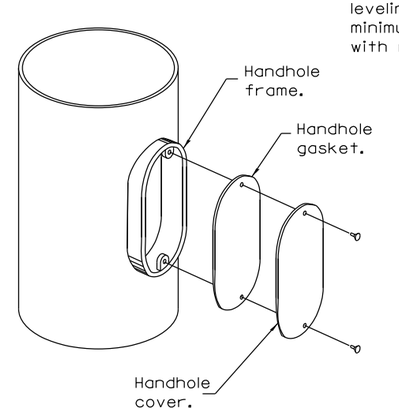


**HANDHOLE DETAIL**

Illinois Department of Transportation

PASSED January 1, 2014
ENGINEER OF PREILIMINARY ENGINEERING
APPROVED January 1, 2014
ENGINEER OF DESIGN AND ENVIRONMENT

ISSUED 1-1-12

# LIGHT POLE STEEL DAVIT ARM

(Sheet 2 of 2)

**STANDARD 830016–02**

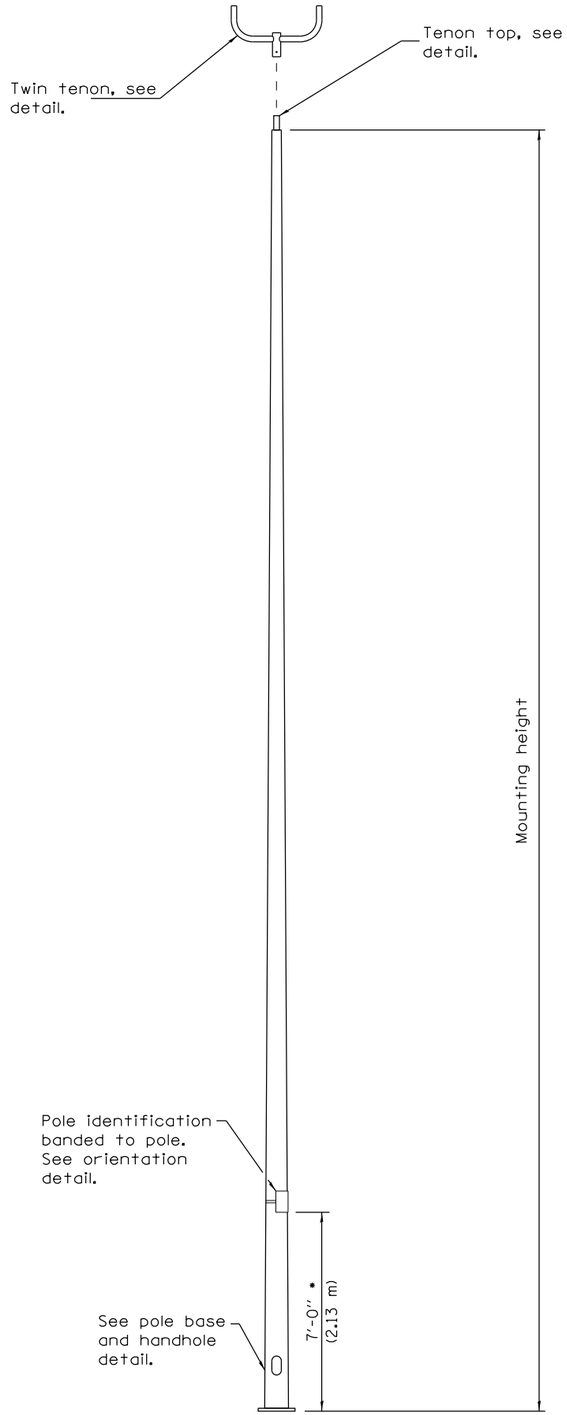


## TENON TOP LIGHT POLE

(Single or twin mount)

* Unless directed otherwise by the Engineer.

| BASE PLATE | | |
|---|---|---|
| MOUNTING HEIGHT | BOLT CIRCLE DIAMETER | BASE PLATE THICKNESS |
| 35' (10.7 m) or less | 11½ (290) | 1 (25) |
| Greater than 35' (10.7 m) to 50' (15.2 m) | 15 (380) | 1¼ (32) |
| Greater than 50' (15.1 m) to 60' (18.3 m) | 15 (380) | 1½ (40) |

| LIGHT POLE | | |
|---|---|---|
| MOUNTING HEIGHT | MINIMUM SHAFT DIAMETER | MINIMUM WALL THICKNESS |
| 35' (10.7 m) or less | 8 tapered to 4 (200 to 100) | 10 guage |
| Greater than 35' (10.7 m) to 50' (15.2 m) | 10 tapered to 4 (250 to 100) | 7 guage |
| Greater than 50' (15.2 m) to 60' (18.3 m) | 10 tapered to 4 (250 to 100) | 5 guage |

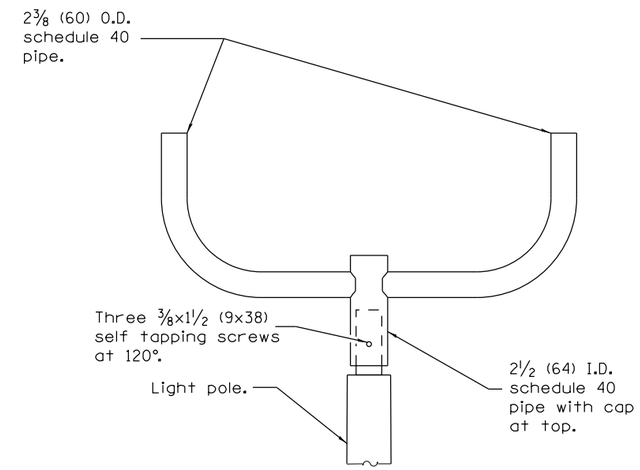


## TWIN TENON DETAIL

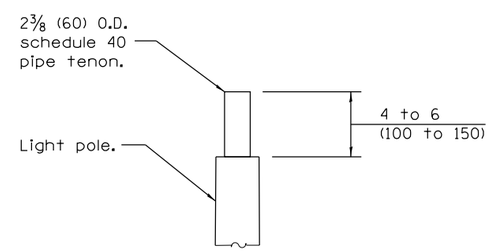


## TENON DETAIL

## GENERAL NOTES

See Standard 836001 for Light Pole Foundation and grounding electrode.

See Standard 720001 for pole identification banding to pole.

Provide breakaway devices where required.

Where anchor rods on existing bridge parapets are too short to mount poles as shown, install leveling plate directly on concrete and level with stainless steel washers.

All dimensions are in inches (millimeters) unless otherwise shown.

Illinois Department of Transportation

PASSED January 1, 2014
ENGINEER OF PRELIMINARY ENGINEERING

APPROVED January 1, 2014
ENGINEER OF DESIGN AND ENVIRONMENT

ISSUED 1-1-12

| DATE | REVISIONS |
|---|---|
| 1-1-14 | Added pole mounted on |
| | bridge parapet. Modified |
| | attachment of screen. |
| 1-1-13 | Added 'barrier or retaining |
| | wall' to POLE BASE DETAIL. |
| | |

# LIGHT POLE STEEL TENON TOP

(Sheet 1 of 2)

**STANDARD 830021–02**

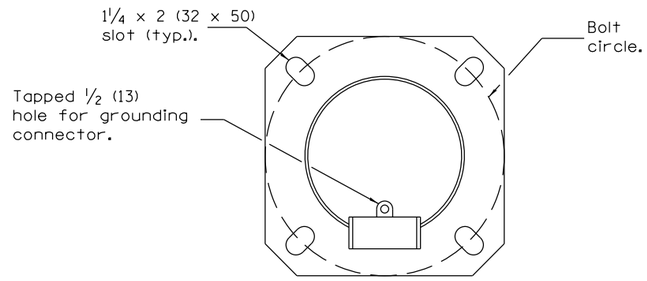


**SECTION A–A**
(Bolts not shown)

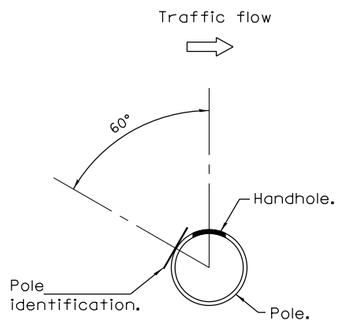


Pole on parapet
or retaining wall.

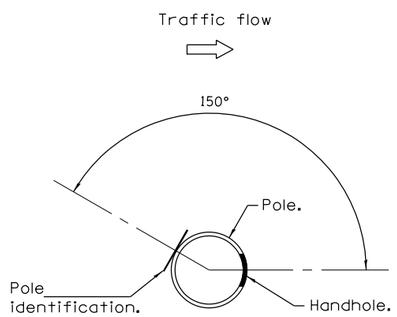


Pole on ground mounted
foundation.

**HANDHOLE /IDENTIFICATION ORIENTATION DETAIL**

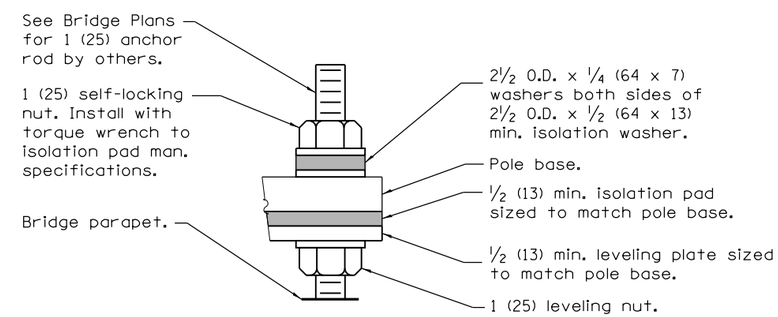


**DETAIL A**

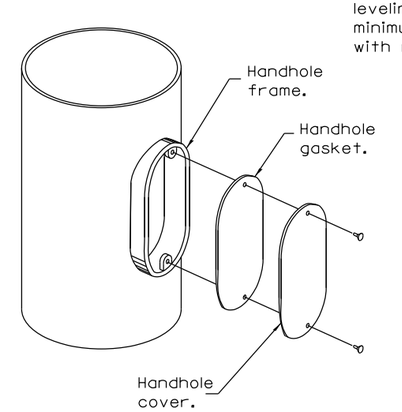


**HANDHOLE DETAIL**

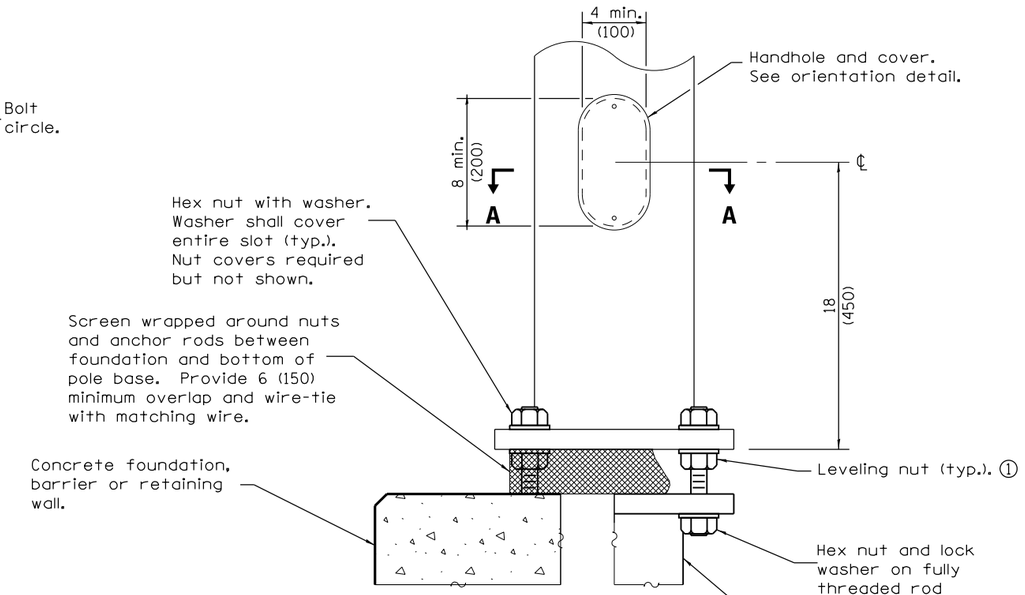


**ELEVATION AT CONCRETE FOUNDATION, METAL FOUNDATION OR RETAINING WALL**

① Omit leveling nuts when breakaway devices are required.

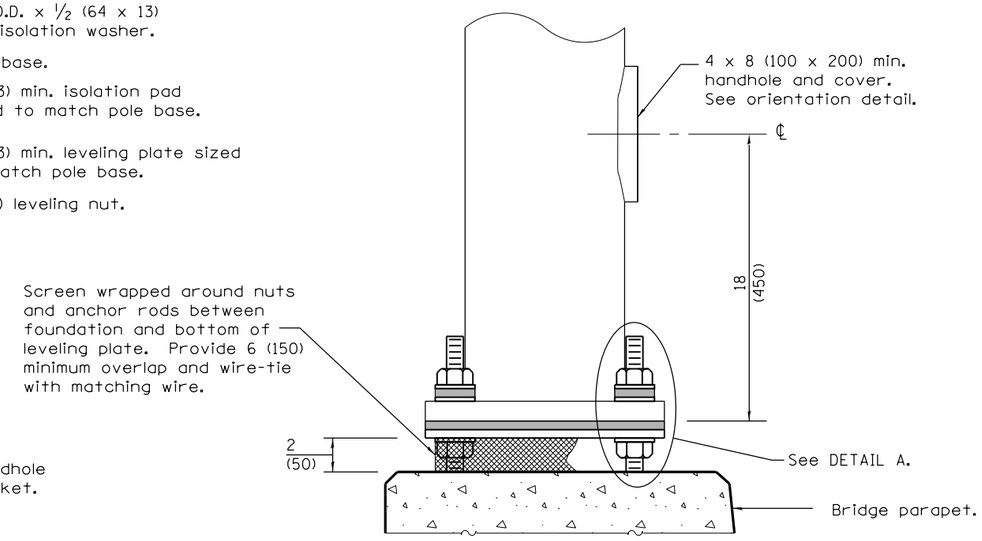


**ELEVATION AT BRIDGE PARAPET**

**POLE BASE DETAILS**

Illinois Department of Transportation

PASSED January 1, 2014
ENGINEER OF PREILIMINARY ENGINEERING
APPROVED January 1, 2014
ENGINEER OF DESIGN AND ENVIRONMENT

ISSUED 1-1-12

# LIGHT POLE
# STEEL TENON TOP

(Sheet 2 of 2)

**STANDARD 830021–02**

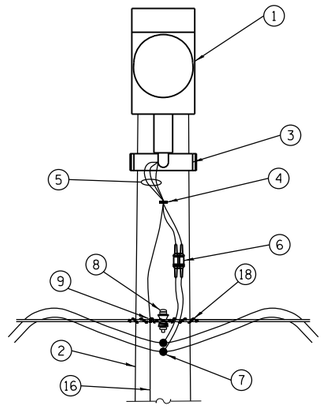


**FACING VIEW**

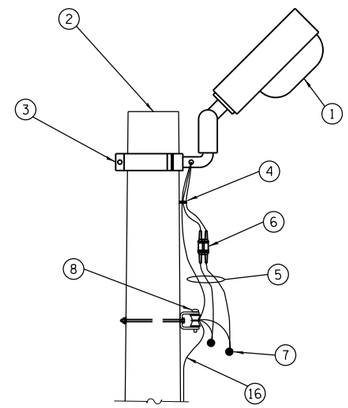


**SIDE VIEW**

## LUMINAIRE MOUNTING DETAILS

43′ - 44′ (13.1 m - 13.4 m) mounting height unless noted otherwise on plans.

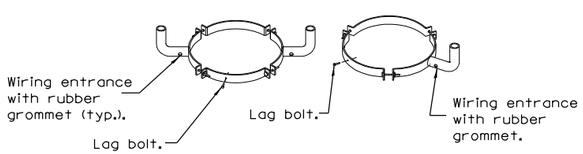


**TWIN** **SINGLE**

## MOUNTING BRACKET DETAILS

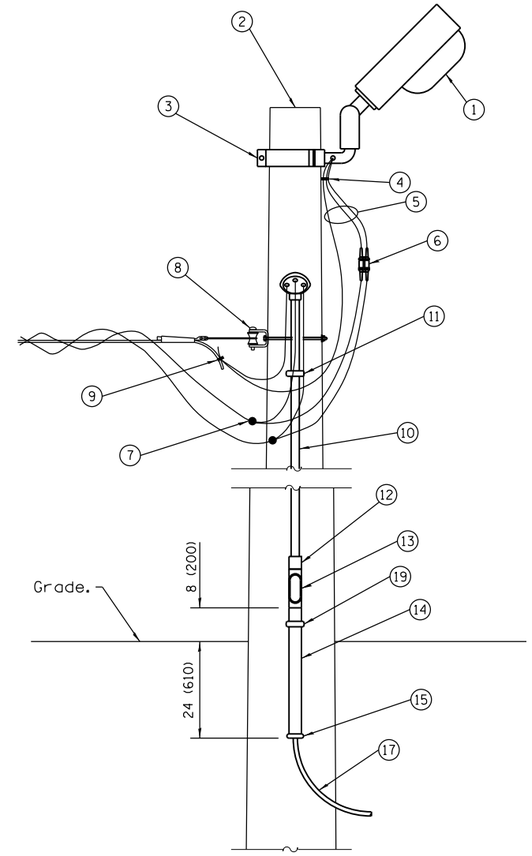


**LIGHT POLE WITH CIRCUIT ROUTED UNDERGROUND**

1. Luminaire.
2. Wood light pole, 50′ (15.2 m), class 3 (typ.). •
3. Luminaire mounting bracket.
4. Cable clamps on 24 (600) centers.
5. Three #10 XLP-USE cable.
6. Waterproof, two-pole fuse holder with fuses.
7. Waterproof insulation piercing tap connector.
8. Heavy duty insulated pulley clevis with mounting bolt and hardware.
9. Ground clamp.
10. 1 (25) rigid steel conduit. •
11. Malleable iron conduit clamps, 5′ (1.5 m) intervals.
12. Threaded conduit reducer.
13. "C" condulet, threaded.
14. 1½ (40) rigid steel conduit. •
15. Conduit bushing.
16. #6 Bare copper ground wire to 10 ft. ground rod, every third light pole.
17. Unit duct.
18. Wire tie.
19. Malleable iron conduit clamp below "C" condulet.

• Size larger as needed.

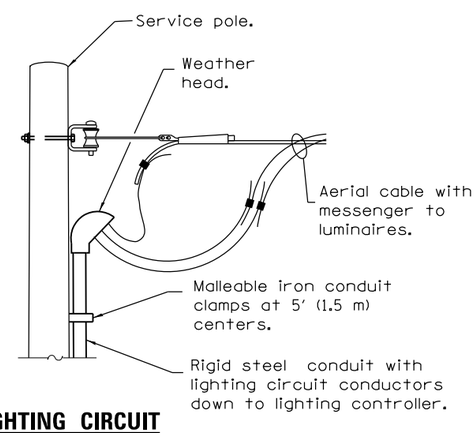


## LIGHTING CIRCUIT AT SERVICE/CONTROLLER

See standard 825001 for service installation.

## GENERAL NOTES

See plans for wire and unit duct sizes and pole locations not shown.

Provide guy wires with strain insulators and anchors, as needed.

All dimensions are in inches (millimeters) unless otherwise shown.

Illinois Department of Transportation

APPROVED January 1, 2013
(Acting)
ENGINEER PRELIMINARY ENGINEERING

APPROVED January 1, 2013
ENGINEER OF DESIGN AND ENVIRONMENT

ISSUED 1-1-97

| DATE | REVISIONS |
|---|---|
| 1-1-13 | New standard. |
| | |
| | |
| | |
| | |
| | |

# TEMPORARY ROADWAY LIGHTING

**STANDARD 830026**

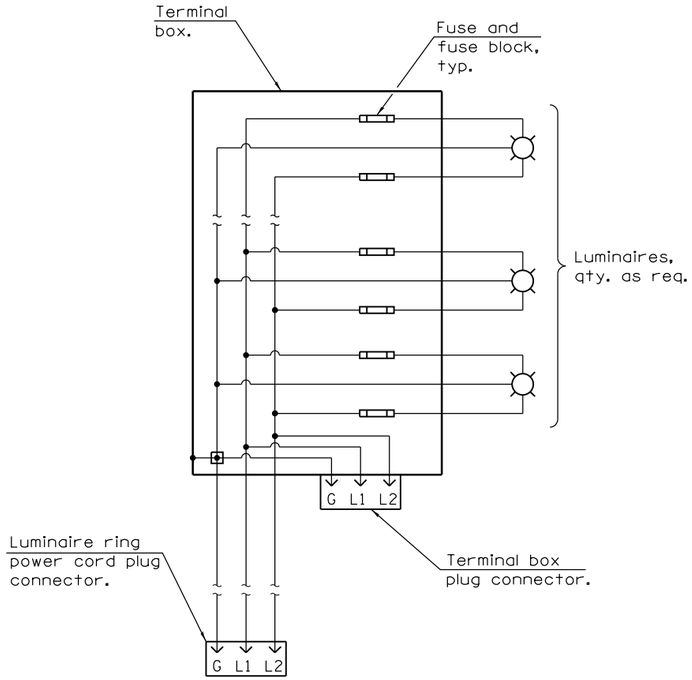


## LUMINAIRE RING WIRING DIAGRAM

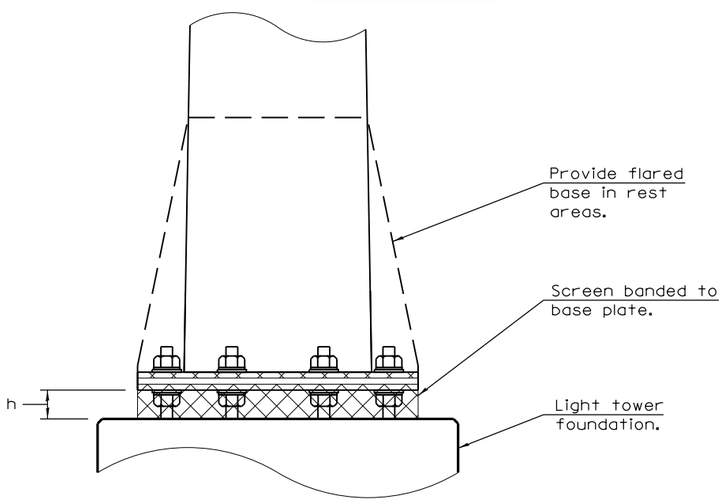


## DETAIL A

h = Anchor rod dia. + leveling nut and washer thickness.

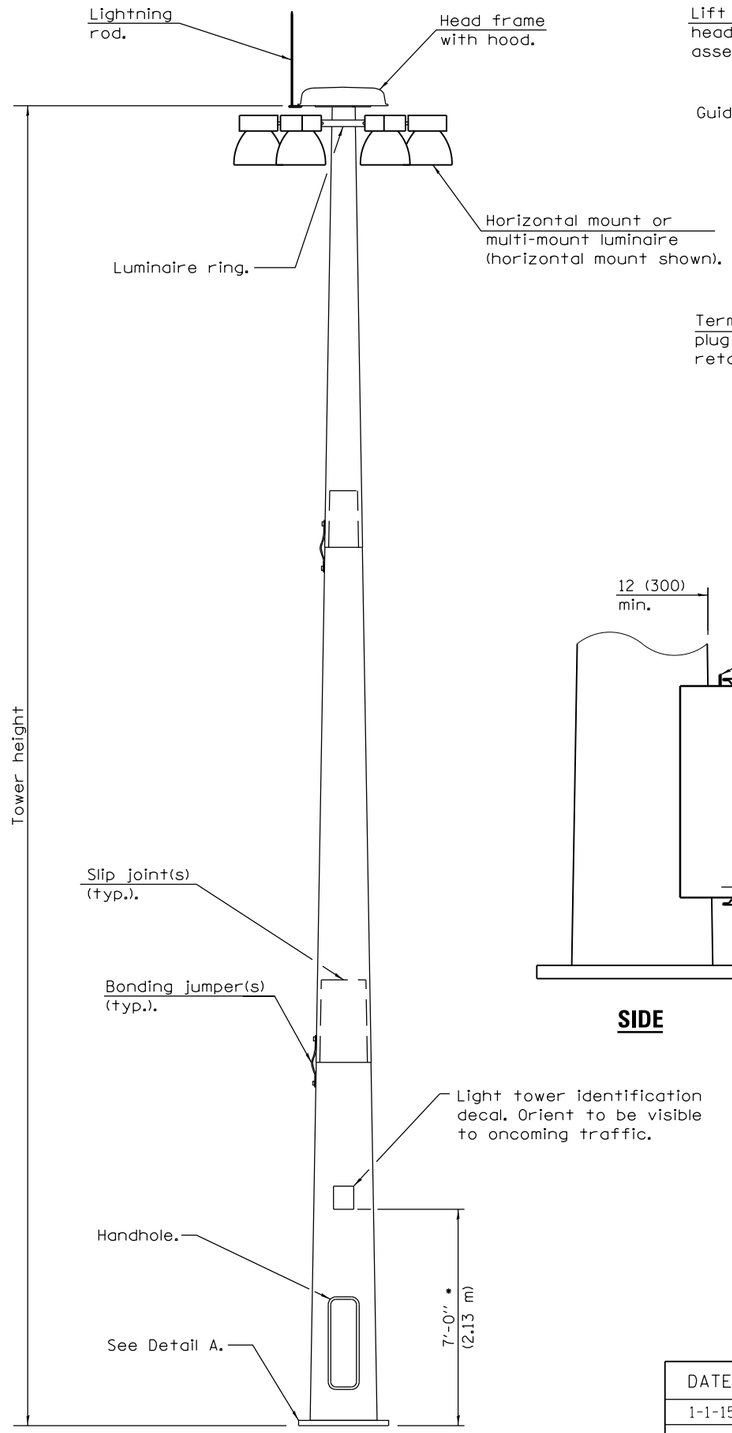


## LIGHT TOWER

• Unless directed otherwise by the Engineer.

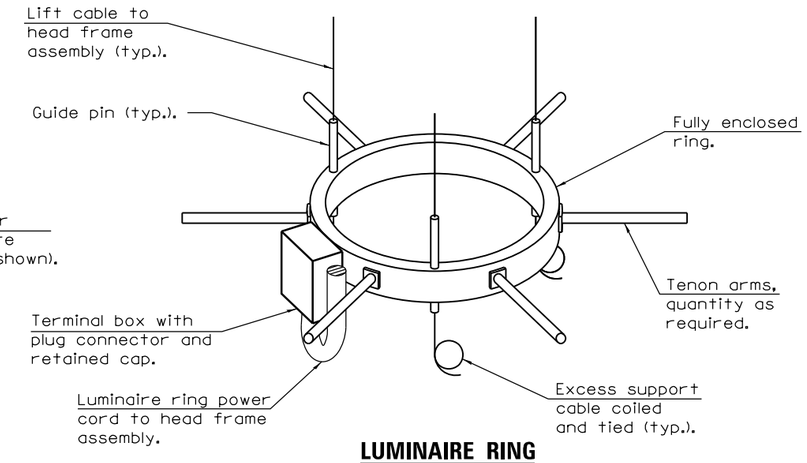


## LUMINAIRE RING

(Two or three lift cable system permitted, three lift cable type shown.)

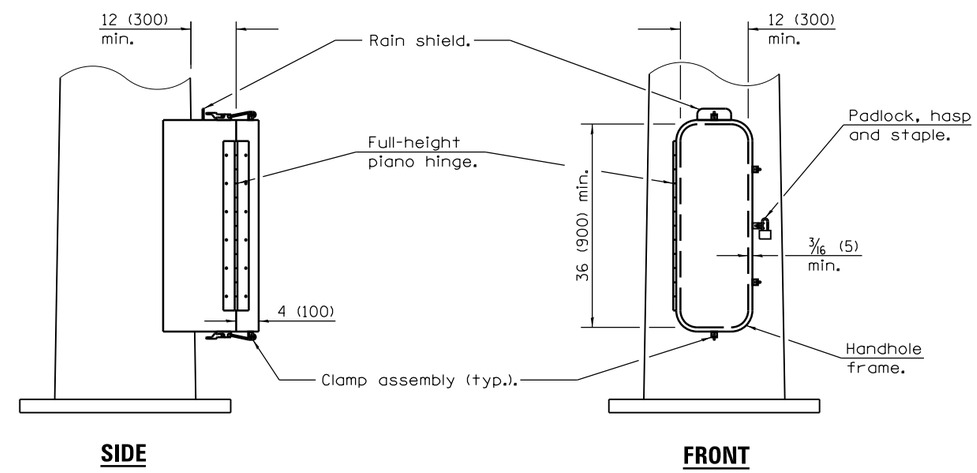


## SIDE

## FRONT

## HANDHOLE

## GENERAL NOTES

See Standard 837001 for High Mast Tower Foundation and grounding electrode.

All dimensions are in inches (millimeters) unless otherwise shown.

Illinois Department of Transportation

PASSED January 1, 2015
ENGINEER OF PRELIMINARY ENGINEERING
APPROVED January 1, 2015
ENGINEER OF DESIGN AND ENVIRONMENT

ISSUED 1-1-11

| DATE | REVISIONS |
|---|---|
| 1-1-15 | Added light tower |
| | identification decal. |
| | Modified Detail A. |
| 1-1-11 | New Standard. |
| | |
| | |

# LIGHT TOWER

(Sheet 1 of 2)

STANDARD 835001-01

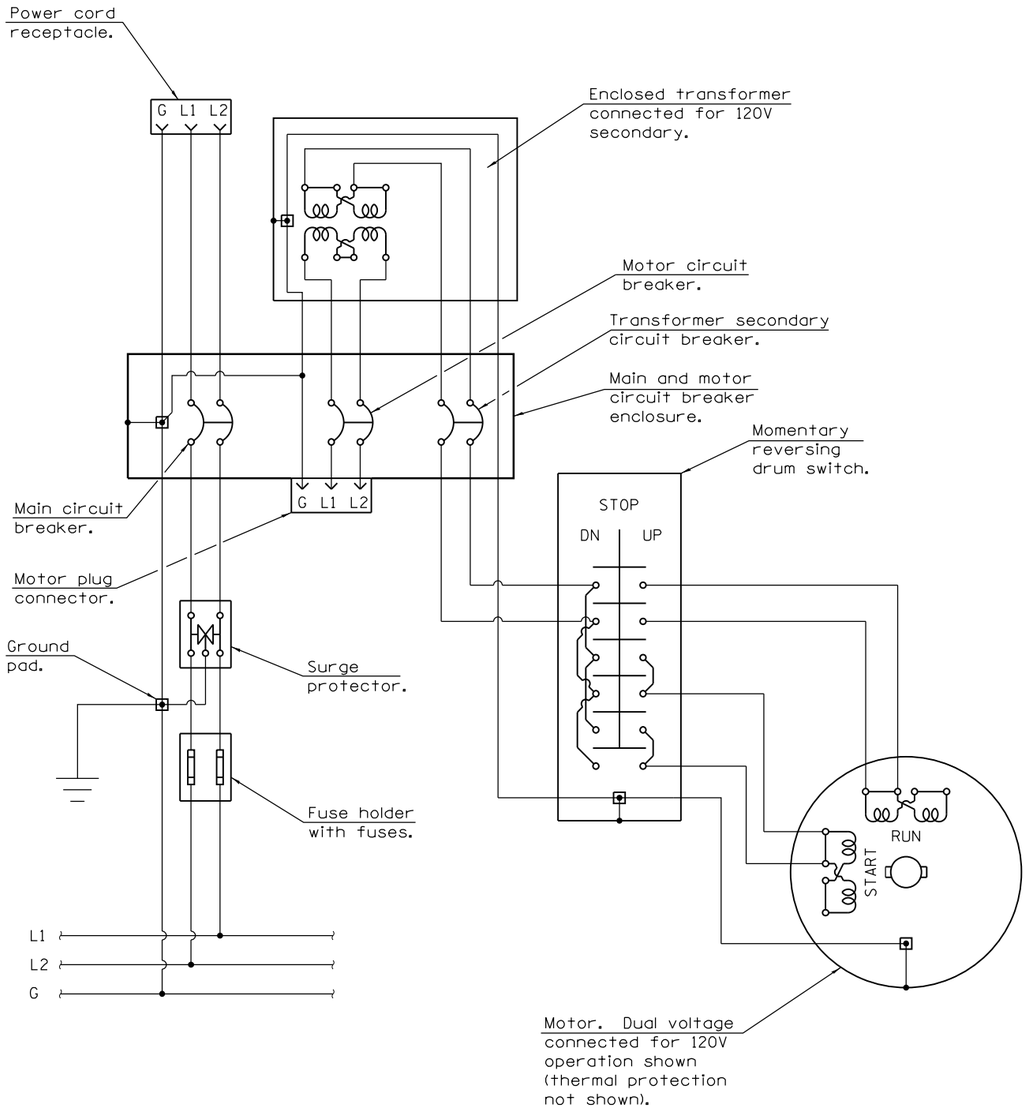


## LOWERING SYSTEM WIRING DIAGRAM

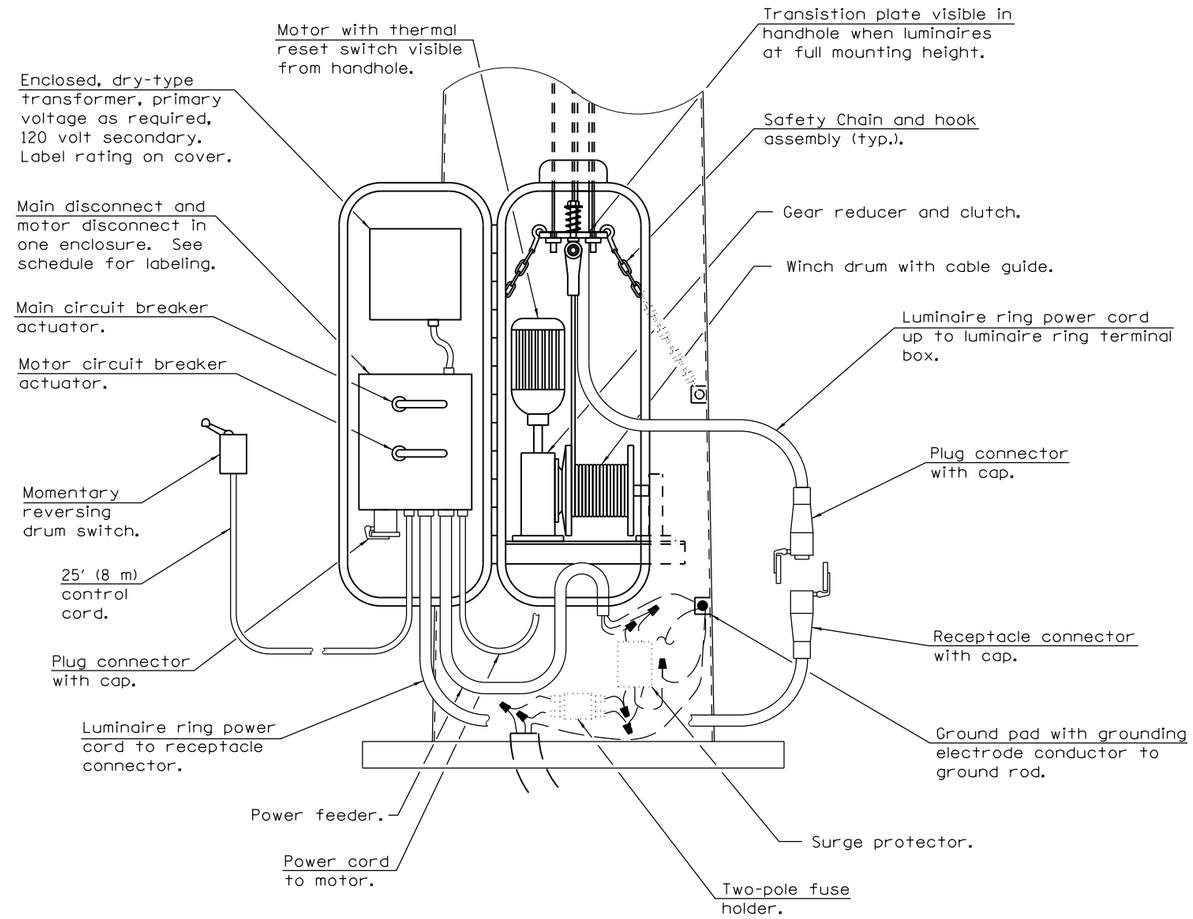


## LOWERING AND SUPPORT MECHANISM

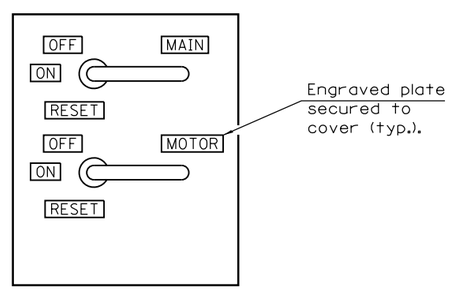


## DISCONNECT SCHEDULE

Illinois Department of Transportation

PASSED January 1, 2015

ENGINEER OF PREILIMINARY ENGINEERING

APPROVED January 1, 2015

ENGINEER OF DESIGN AND ENVIRONMENT

ISSUED 1-1-11

# LIGHT TOWER

(Sheet 2 of 2)

**STANDARD 835001–01**

| LIGHT POLE MOUNTING HEIGHT | BOLT CIRCLE DIAMETER | METAL FOUNDATION SHAFT DIAMETER | METAL FOUNDATION SHAFT DEPTH | METAL FOUNDATION TOP PLATE (min) | CONCRETE FOUNDATION SHAFT DIAMETER | CONCRETE FOUNDATION SHAFT DEPTH | CONCRETE FOUNDATION ANCHOR ROD LENGTH (1) |
|---|---|---|---|---|---|---|---|
| ≤30′ (9.1 m) | 11½ (292) | 8⅝ (220) | 6′ (1.83 m) | 12 x 12 x 1 (300 x 300 x 25) | 24 (610) | 5′-0″ (1.52 m) | 4′-9″ (1.45 m) |
| 31′-35′ (9.4 m - 10.7 m) | 11½ (292) | 8⅝ (220) | 6′ (1.83 m) | 12 x 12 x 1 (300 x 300 x 25) | 24 (610) | 5′-6″ (1.67 m) | 5′-3″ (1.60 m) |
| 36′-40′ (10.9 m - 12.2 m) | 15 (381) (3) | 8⅝ (220) | 6′ (1.83 m) (2) | 15 x 15 x 1¼ (375 x 375 x 31) | 30 (762) | 6′-0″ (1.83 m) | 5′-9″ (1.75 m) |
| 41′-45′ (12.5 m - 13.7 m) | 15 (381) (3) | 8⅝ (220) | 6′ (1.83 m) (2) | 15 x 15 x 1¼ (375 x 375 x 31) | 30 (762) | 6′-6″ (1.98 m) | 6′-3″ (1.90 m) |
| 46′-50′ (14.0 m - 15.2 m) | 15 (381) (3) | 8⅝ (220) | 8′ (2.44 m) | 15 x 15 x 1¼ (375 x 375 x 31) | 30 (762) | 7′-0″ (2.13 m) | 6′-9″ (2.00 m) |

(1) Length does not include 4 (100) hook.

(2) 8⅝ x 8′-0″ (220 x 2.44 m) for twin luminaires.

(3) Bolt circle diam. shall be 17 (430) when a transformer base is used.

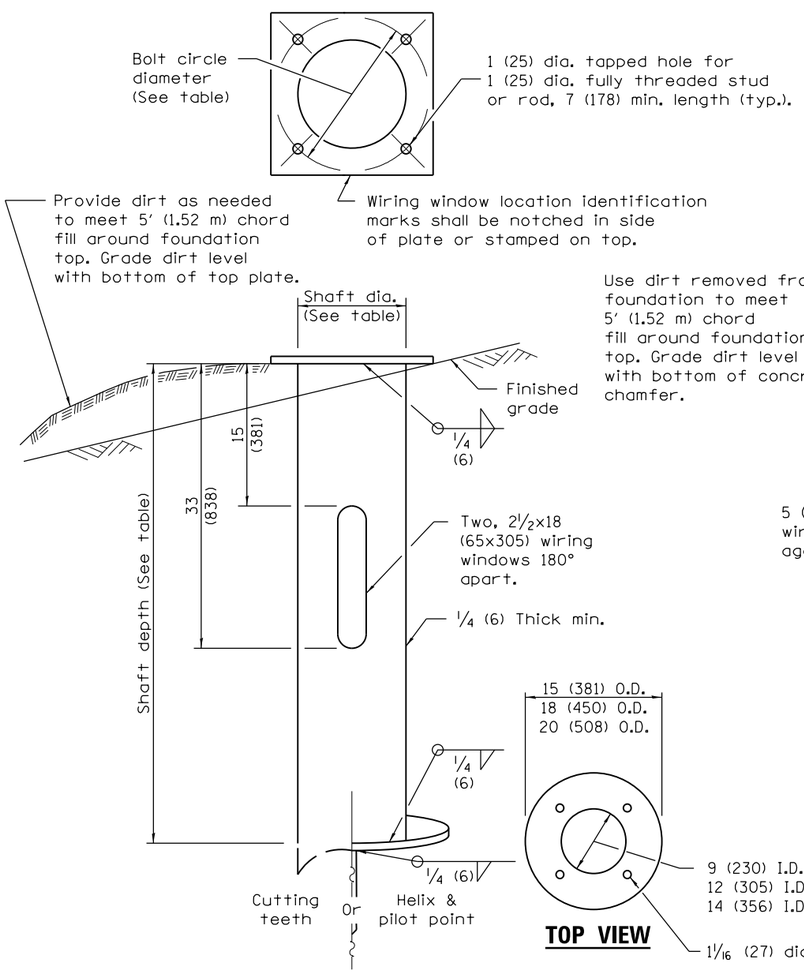


## METAL FOUNDATION

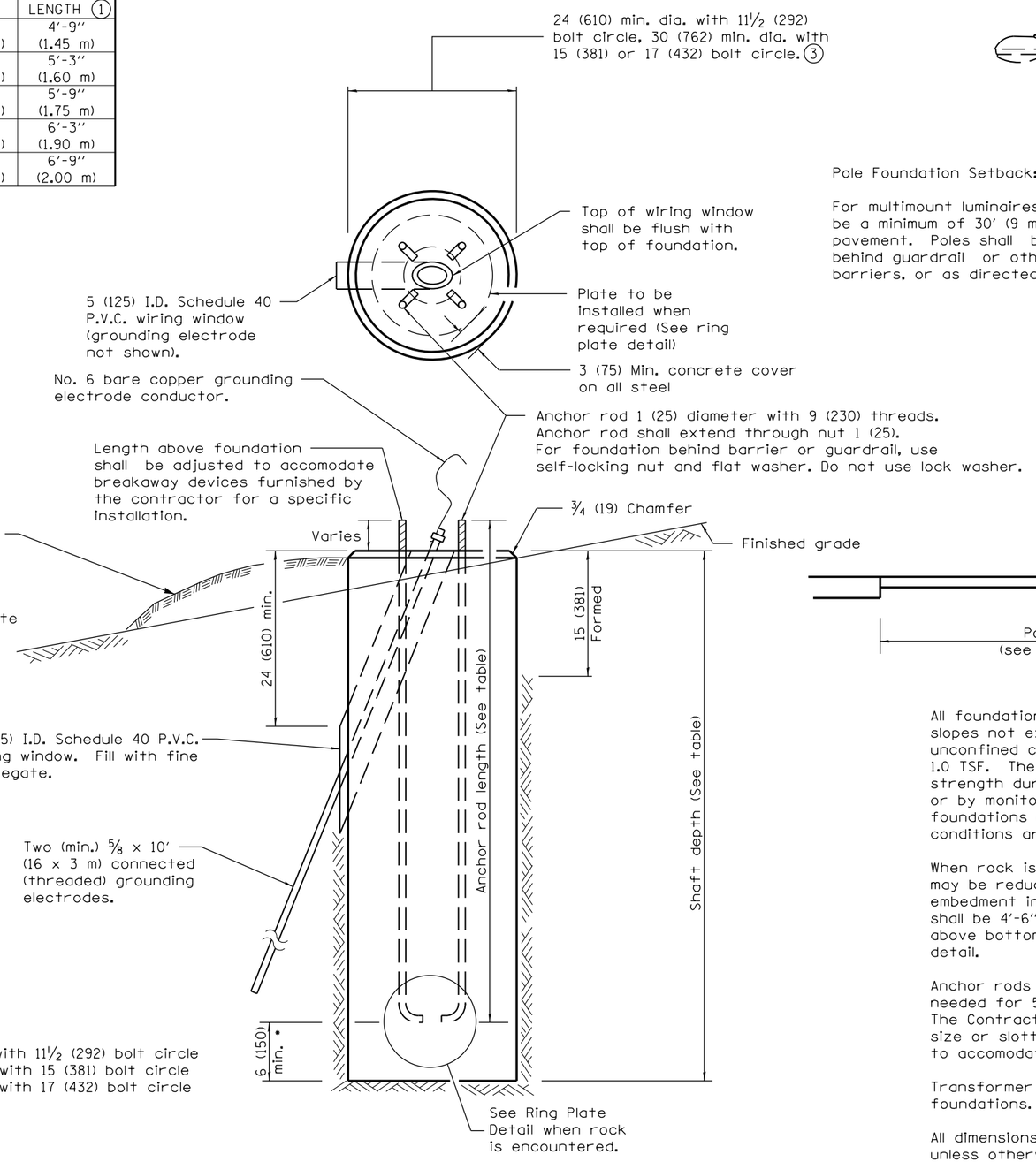


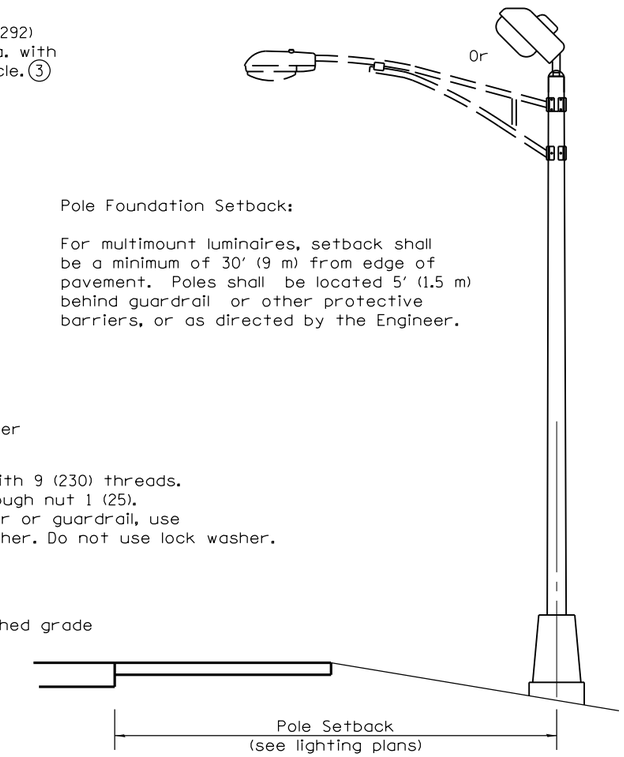


Pole Foundation Setback:

For multimount luminaires, setback shall be a minimum of 30′ (9 m) from edge of pavement. Poles shall be located 5′ (1.5 m) behind guardrail or other protective barriers, or as directed by the Engineer.

## GENERAL NOTES

All foundations are designed to be located on slopes not exceeding 2:1 where soils have an unconfined compressive strength of at least 1.0 TSF. The Contractor shall verify the soil strength during drilling for concrete foundations or by monitoring installation resistance of metal foundations and notify the Engineer if other conditions are encountered.

When rock is encountered the foundation depth may be reduced 6 (150) for every 12 (300) of embedment in rock. The minimum foundation depth shall be 4′-6″ (1.37 m) with cut anchor rods 6 (150) above bottom of excavated hole. See ring plate detail.

Anchor rods shall be increased in diameter as needed for 50′ (15.2 m) mounting height or above. The Contractor shall match the breakaway device size or slotted hole size in the pole base plate to accomodate larger rod sizes.

Transformer bases shall not be used on metal foundations.

All dimensions are in inches (millimeters) unless otherwise shown.

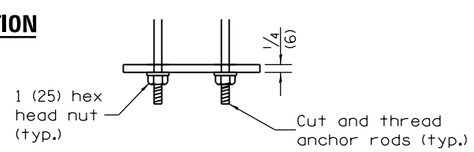


## RING PLATE DETAIL

• If the required anchor rod length above top of foundation is less than 3 (75), anchor rods may be lowered below 6 (150).

## CONCRETE FOUNDATION

| DATE | REVISIONS |
|---|---|
| 1-1-13 | Revised concrete foundation |
| | notes, pole foundation set- |
| | back notes, ring plate det. |
| 1-1-12 | Revised metal foundation |
| | wiring window dimensions. |

Illinois Department of Transportation

PASSED January 1, 2013
(Acting)
ENGINEER OF PRELIMINARY ENGINEERING

APPROVED January 1, 2013
ENGINEER OF DESIGN AND ENVIRONMENT

ISSUED 1-1-10

# LIGHT POLE FOUNDATION

STANDARD 836001–02

| FOUNDATION TABLE | | | | |
|---|---|---|---|---|
| LIGHT POLE MOUNTING HEIGHT | SHAFT DIAMETER | SHAFT DEPTH | ANCHOR ROD LENGTH (1) | ANCHOR ROD CIRCLE DIA. |
| ≤30′ (9.1 m) | 24 (610) | 36 (914) | 5′-2″ (1.57 m) | 11½ (292) |
| 31′-35′ (9.4 m - 10.7 m) | 24 (610) | 3′-6″ (1.06 m) | 5′-8″ (1.73 m) | 11½ (292) |
| 36′-40′ (10.9 m - 12.2 m) | 30 (762) | 4′-0″ (1.22 m) | 6′-2″ (1.88 m) | 15 (381) |
| 41′-45′ (12.5 m - 13.7 m) | 30 (762) | 4′-6″ (1.37 m) | 6′-8″ (2.03 m) | 15 (381) |
| 46′-50′ (14.0 m - 15.2 m) | 30 (762) | 5′-0″ (1.52 m) | 7′-2″ (2.18 m) | 15 (381) |

(1) Length does not include 4 (100) hook.

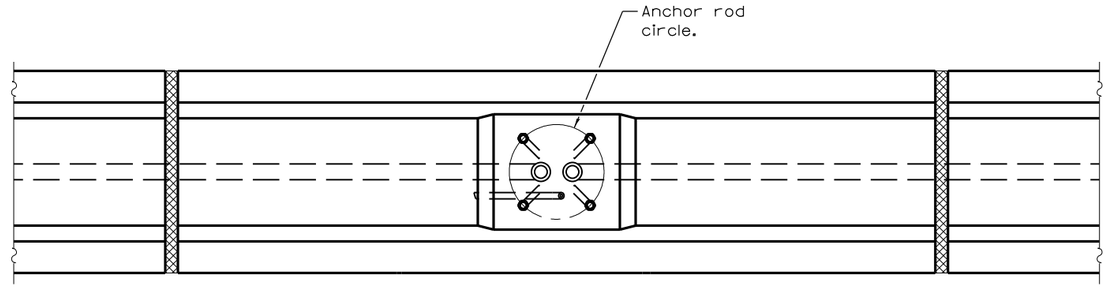


**PLAN**

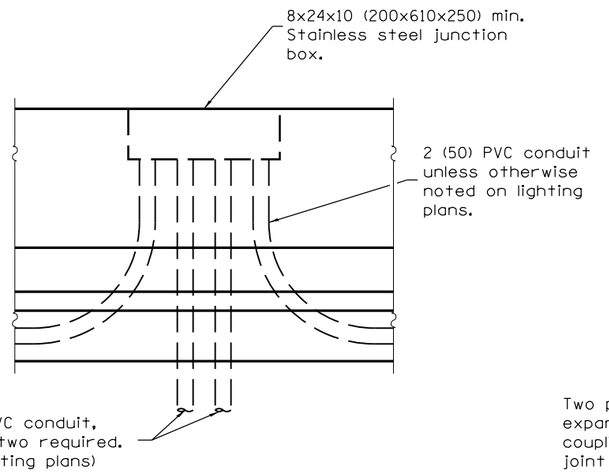


**JUNCTION BOX ELEVATION**

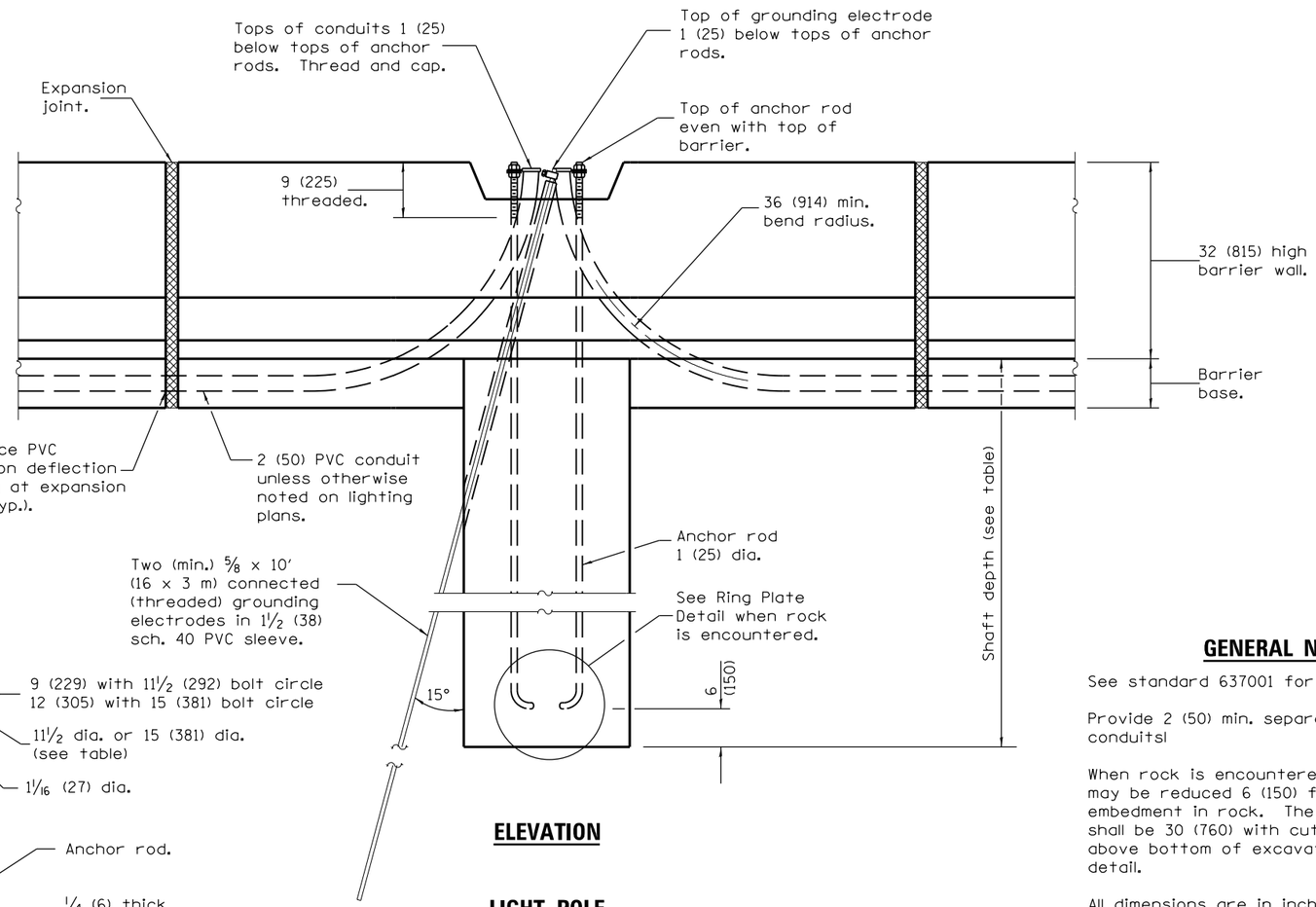


**ELEVATION**

**LIGHT POLE FOUNDATION**

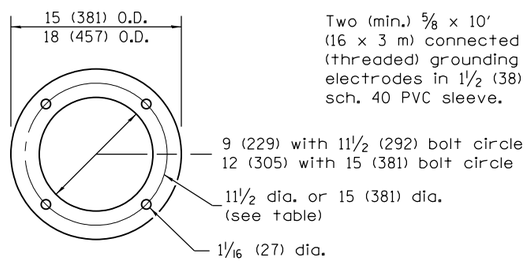


**PLAN**

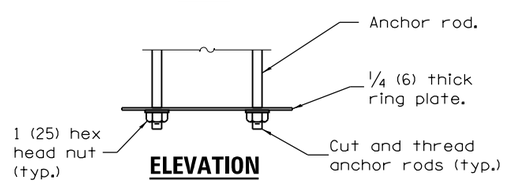


**ELEVATION**

**RING PLATE DETAIL**

## GENERAL NOTES

See standard 637001 for barrier wall details.

Provide 2 (50) min. separation between all conduits!

When rock is encountered the foundation depth may be reduced 6 (150) for every 12 (300) of embedment in rock. The minimum foundation depth shall be 30 (760) with cut anchor rods 6 (150) above bottom of excavated hole. See ring plate detail.

All dimensions are in inches (millimeters) unless otherwise shown.

Illinois Department of Transportation

PASSED January 1, 2013
ENGINEER OF PRELIMINARY ENGINEERING
APPROVED January 1, 2013
ENGINEER OF DESIGN AND ENVIRONMENT

ISSUED 1-1-97

| DATE | REVISIONS |
|---|---|
| 1-1-14 | Modified grounding method. |
| | Revised general notes. |
| | |
| 1-1-13 | New standard. |
| | |
| | |

# LIGHT POLE FOUNDATION WITH 32 in. (815 mm) CONCRETE MEDIAN BARRIER

**STANDARD 836006–01**

| FOUNDATION TABLE | | | | |
|---|---|---|---|---|
| LIGHT POLE MOUNTING HEIGHT | SHAFT DIAMETER | SHAFT DEPTH | ANCHOR ROD LENGTH (1) | ANCHOR ROD CIRCLE DIA. |
| ≤30′ (9.1 m) | 24 (610) | 36 (914) | 6′-0″ (1.83 m) | 11½ (292) |
| 31′-35′ (9.4 m - 10.7 m) | 24 (610) | 3′-6″ (1.06 m) | 6′-6″ (1.98 m) | 11½ (292) |
| 36′-40′ (10.9 m - 12.2 m) | 30 (762) | 4′-0″ (1.22 m) | 7′-0″ (2.13 m) | 15 (381) |
| 41′-45′ (12.5 m - 13.7 m) | 30 (762) | 4′-6″ (1.37 m) | 7′-6″ (2.29 m) | 15 (381) |
| 46′-50′ (14.0 m - 15.2 m) | 30 (762) | 5′-0″ (1.52 m) | 8′-0″ (2.44 m) | 15 (381) |

(1) Length does not include 4 (100) hook.

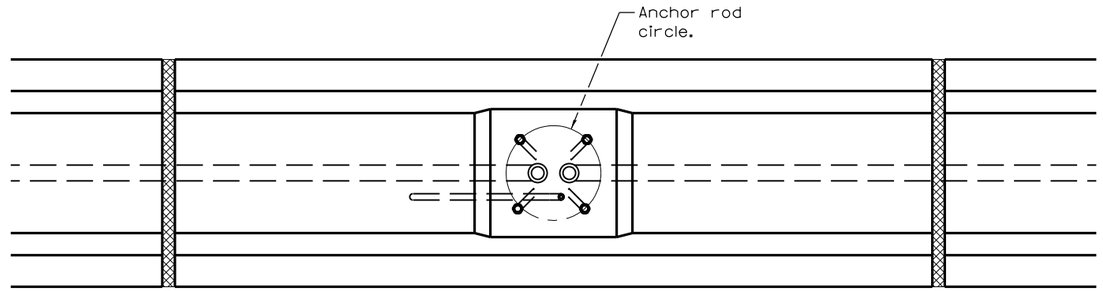


**PLAN**

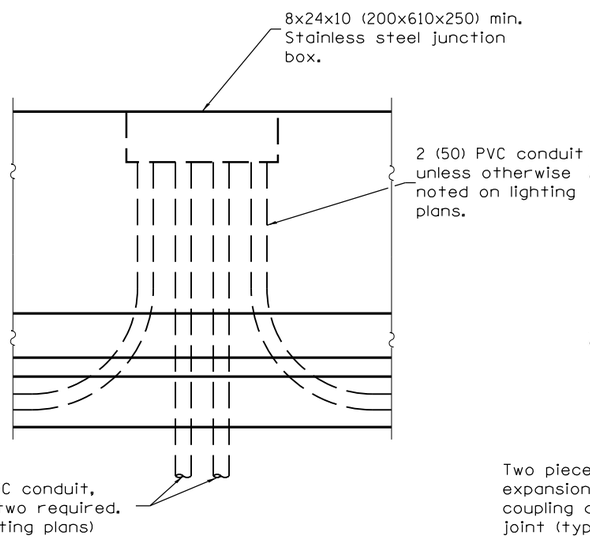


**JUNCTION BOX ELEVATION**

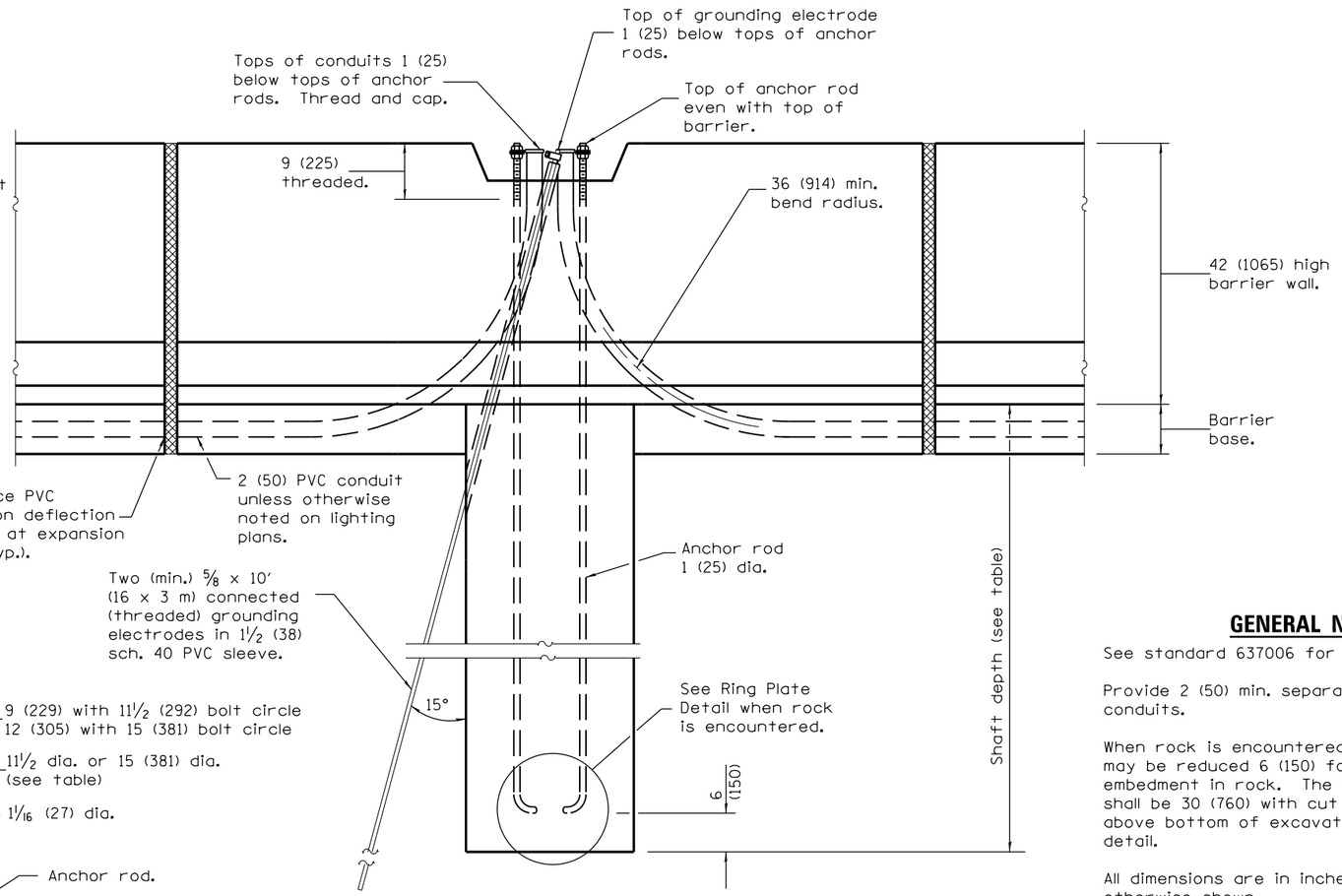


**ELEVATION**

**LIGHT POLE FOUNDATION**

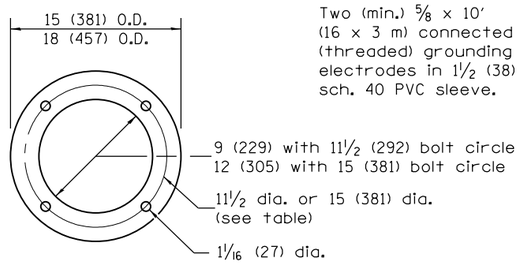


**PLAN**

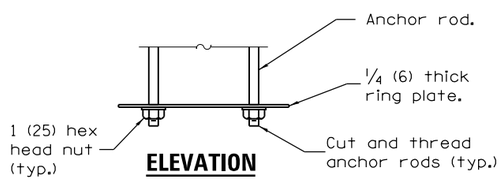


**ELEVATION**

**RING PLATE DETAIL**

## GENERAL NOTES

See standard 637006 for barrier wall details.

Provide 2 (50) min. separation between all conduits.

When rock is encountered the foundation depth may be reduced 6 (150) for every 12 (300) of embedment in rock. The minimum foundation depth shall be 30 (760) with cut anchor rods 6 (150) above bottom of excavated hole. See ring plate detail.

All dimensions are in inches (millimeters) unless otherwise shown.

Illinois Department of Transportation

PASSED January 1, 2014
ENGINEER OF POLICY AND PROCEDURES
APPROVED January 1, 2014
ENGINEER OF DESIGN AND ENVIRONMENT

ISSUED 1-1-04

| DATE | REVISIONS |
|---|---|
| 1-1-14 | Modified grounding meathod. |
| | Revised general notes. |
| | |
| 1-1-13 | New standard. |
| | |
| | |

# LIGHT POLE FOUNDATION WITH 42 in. (1065 mm) CONCRETE MEDIAN BARRIER

**STANDARD 836011–01**

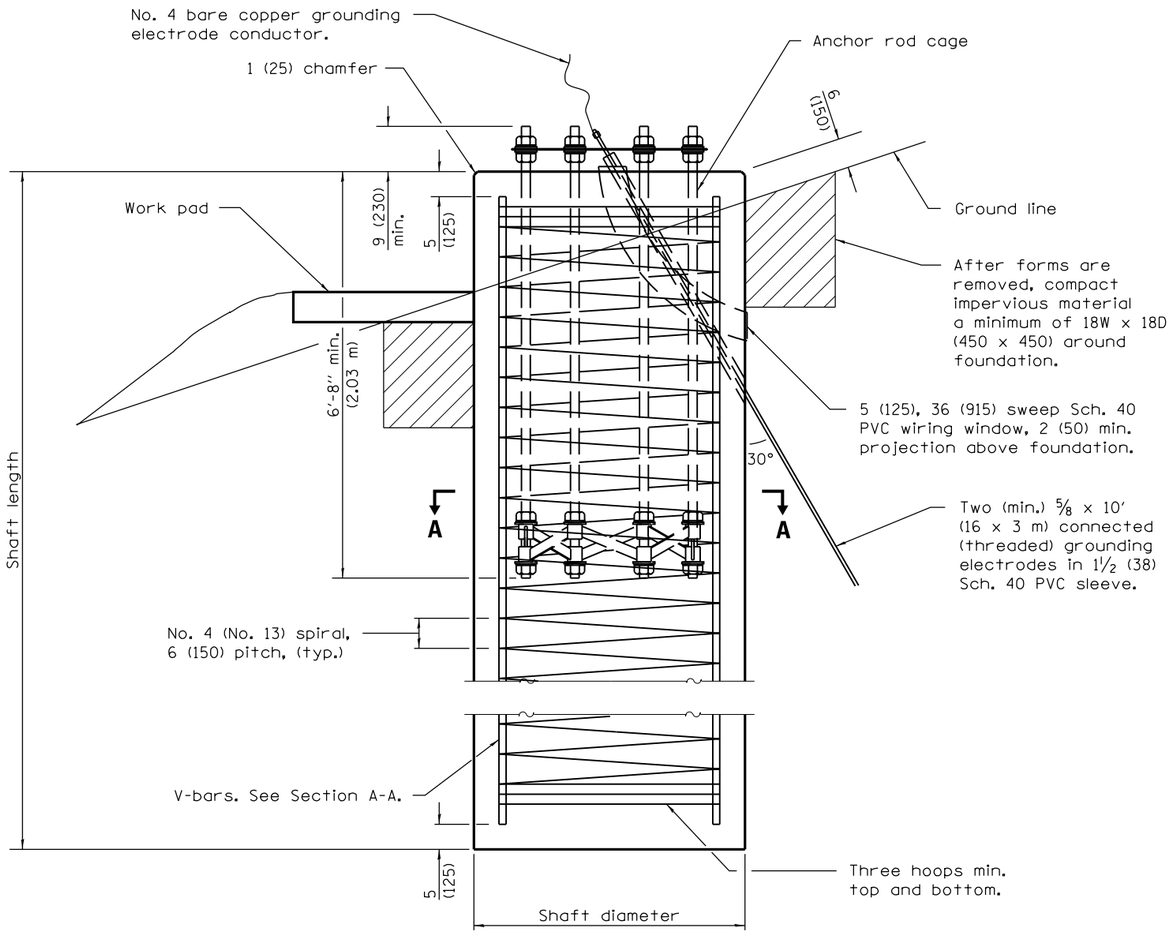


**FOUNDATION ELEVATION**

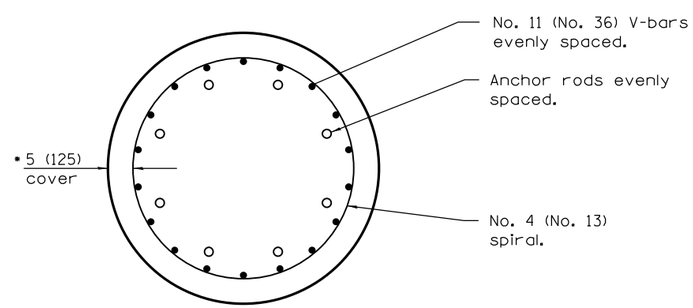


**SECTION A–A**

• See Rod and Reinforcement Table.

| SHAFT LENGTH TABLE | | | | | | | | | | | |
|---|---|---|---|---|---|---|---|---|---|---|---|
| SOIL CONSISTENCY | | AVERAGE STRENGTH | LIGHT TOWER HEIGHT | | | | | | | | |
| | | Qu in tsf (Qu in kPa) | 80' (24 m) | 90' (27 m) | 100' (30 m) | 110' (34 m) | 120' (37 m) | 130' (40 m) | 140' (43 m) | 150' (46 m) | 160' (49 m) |
| Cohesive | SOFT | < 0.5 (< 50) | 20'-6" (6.2 m) | 21'-6" (6.5 m) | 22'-6" (6.9 m) | 24'-0" (7.2 m) | 25'-0" (7.6 m) | 26'-6" (8.0 m) | 27'-6" (8.3 m) | 28'-6" (8.7 m) | 30'-0" (9.1 m) |
| | MEDIUM | 0.5 to 1 (50 to 100) | 17'-0" (5.1 m) | 17'-6" (5.3 m) | 18'-6" (5.6 m) | 19'-0" (5.8 m) | 20'-6" (6.2 m) | 21'-6" (6.4 m) | 22'-0" (6.7 m) | 23'-6" (7.0 m) | 24'-0" (7.3 m) |
| | STIFF | 1 to 2 (100 to 200) | 14'-6" (4.4 m) | 15'-0" (4.5 m) | 15'-6" (4.7 m) | 16'-0" (4.8 m) | 17'-6" (5.2 m) | 18'-0" (5.4 m) | 18'-6" (5.5 m) | 19'-6" (5.9 m) | 20'-0" (6.1 m) |
| | VERY STIFF | 2 to 4 (200 to 400) | 13'-0" (3.8 m) | 13'-0" (3.9 m) | 13'-6" (4.1 m) | 14'-0" (4.2 m) | 15'-0" (4.5 m) | 15'-6" (4.6 m) | 16'-0" (4.7 m) | 17'-0" (5.1 m) | 17'-6" (5.2 m) |
| | HARD | > 4 (> 400) | 11'-6" (3.5 m) | 12'-0" (3.5 m) | 12'-0" 3.6 m) | 12'-6" (3.7 m) | 13'-6" (4.0 m) | 13'-6" (4.1 m) | 14'-0" (4.2 m) | 15'-0" (4.5 m) | 15'-6" (4.6 m) |
| | | N in BLOWS/FT. (N in BLOWS/0.3m) | | | | | | | | | |
| Granular | VERY LOOSE | < 5 (< 5) | 16'-6" (5.0 m) | 17'-6" (5.2 m) | 18'-0" (5.4 m) | 18'-6" (5.6 m) | 19'-0" (5.8 m) | 20'-0" (6.0 m) | 20'-6" (6.2 m) | 21'-0" (6.3 m) | 21'-6" (6.5 m) |
| | LOOSE | 5 to 10 (5 to 10) | 15'-0" (4.6 m) | 16'-0" (4.8 m) | 16'-6" (4.9 m) | 17'-0" (5.1 m) | 17'-6" (5.3 m) | 18'-0" (5.5 m) | 18'-6" (5.6 m) | 19'-0" (5.7 m) | 19'-6" (5.9 m) |
| | MEDIUM | 10 to 25 (10 to 25) | 14'-6" (4.4 m) | 15'-0" (4.5 m) | 15'-6" (4.7 m) | 16'-0" (4.9 m) | 16'-6" (5.0 m) | 17'-0" (5.2 m) | 17'-6" (5.3 m) | 18'-0" (5.5 m) | 18'-6" (5.6 m) |
| | DENSE | 25 to 50 (25 to 50) | 14'-0" (4.1 m) | 14'-6" (4.3 m) | 15'-0" (4.5 m) | 15'-6" (4.6 m) | 15'-6" (4.7 m) | 16'-6" (4.9 m) | 16'-6" (5.0 m) | 17'-0" (5.2 m) | 17'-6" (5.3 m) |
| | VERY DENSE | > 50 (> 50) | 13'-0" (3.9 m) | 13'-6" (4.1 m) | 14'-0" (4.2 m) | 14'-6" (4.4 m) | 15'-0" (4.5 m) | 15'-6" (4.7 m) | 16'-0" (4.8 m) | 16'-6" (4.9 m) | 17'-0" (5.1 m) |

See Sheet 2 for GENERAL NOTES.

Illinois Department of Transportation

PASSED January 1, 2015
ENGINEER OF PRELIMINARY ENGINEERING
APPROVED January 1, 2015
ENGINEER OF DESIGN AND ENVIRONMENT

ISSUED 1-1-10

| DATE | REVISIONS |
|---|---|
| 1-1-15 | Added 6'-8" min. anchor |
| | rod embedment in |
| | foundation. |
| 1-1-14 | Revised diameter of grd. |
| | electrode sleeve. |
| | |

# LIGHT TOWER FOUNDATION

(Sheet 1 of 2)

**STANDARD 837001–04**

| ROD AND REINFORCEMENT TABLE | | | | | |
|---|---|---|---|---|---|
| TOWER HEIGHT | ANCHOR ROD DIAM. (MIN) | ROD CIRCLE DIAM. (MIN) | TOWER BASE DIAM. (MIN) | DRILLED SHAFT DIAM. (1) | V BAR QTY. |
| 80′ (25 m) | 1½ (38) | 30 (760) | 24 (610) | 4′-0″ (1.2 m) | 14 |
| 90′ (27 m) | 1½ (38) | 30 (760) | 24 (610) | 4′-0″ (1.2 m) | 14 |
| 100′ (30 m) | 1½ (38) | 30 (760) | 24 (610) | 4′-0″ (1.2 m) | 14 |
| 110′ (34 m) | 1½ (38) | 30 (760) | 24 (610) | 4′-0″ (1.2 m) | 14 |
| 120′ (37 m) | 1¾ (44) | 36 (915) | 26 (660) | 4′-6″ (1.4 m) | 18 |
| 130′ (40 m) | 1¾ (44) | 36 (915) | 28 (710) | 4′-6″ (1.4 m) | 18 |
| 140′ (43 m) | 1¾ (44) | 36 (915) | 28 (710) | 4′-6″ (1.4 m) | 18 |
| 150′ (46 m) | 2¼ (57) | 38 (965) | 30 (760) | 5′-0″ (1.5 m) | 22 |
| 160′ (49 m) | 2¼ (57) | 38 (965) | 32 (810) | 5′-0″ (1.5 m) | 22 |

(1) Diameter based on a 5 (125) conc. cover. The min. cover shall be 3 (75) in dry shaft excavation and 4 (100) in a wet hole. When rock is encountered a 5 (125) cover against soil and a 2 (50) cover against rock shall be required.

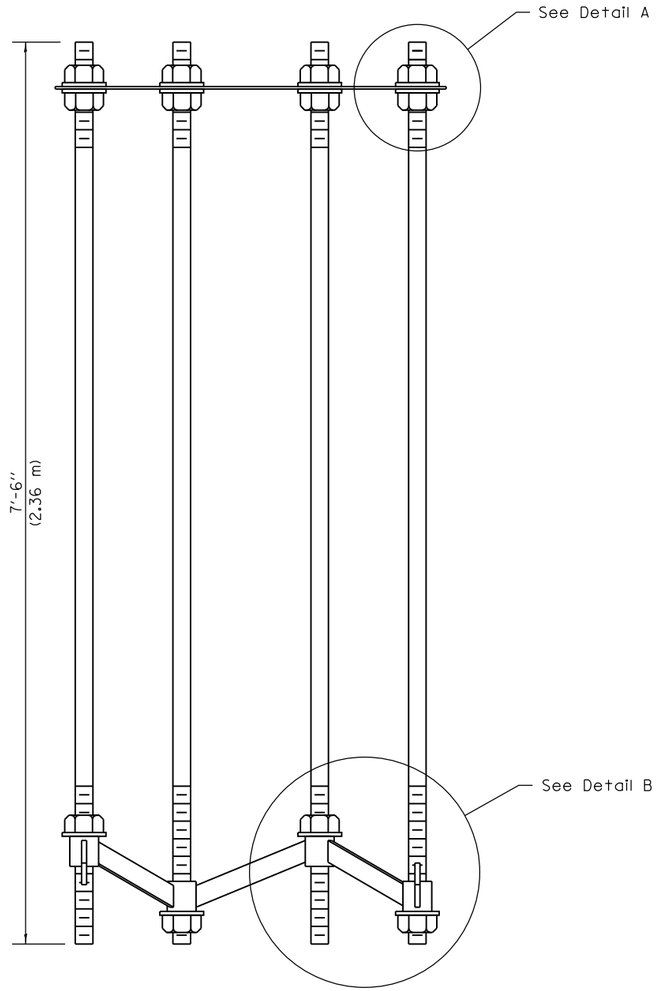


**SECTION B–B**

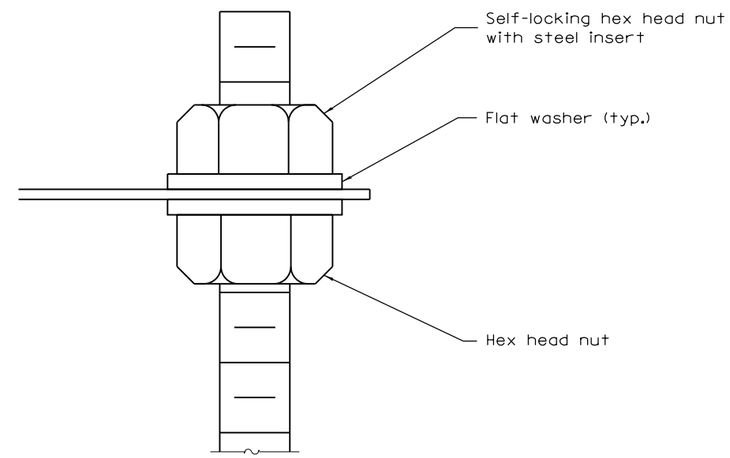


**DETAIL A**

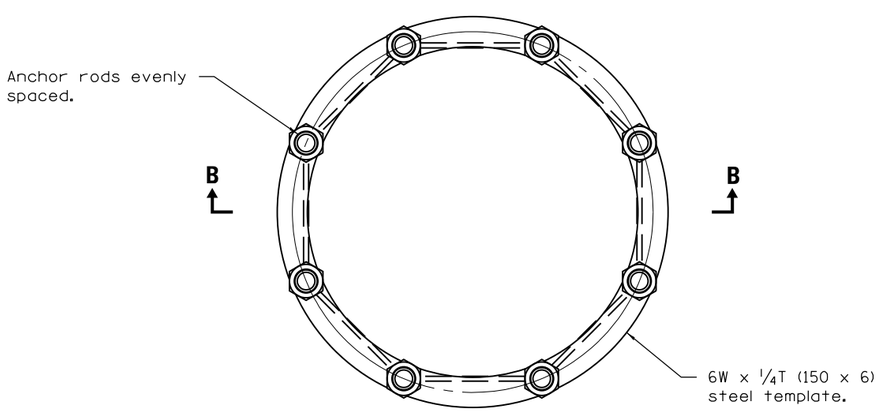


**ANCHOR ROD CAGE (PLAN)**

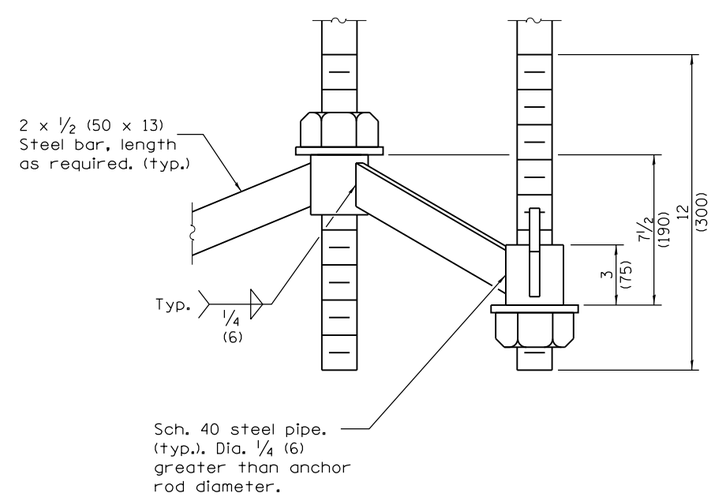


**DETAIL B**

## GENERAL NOTES

The shaft length(s) are based on soil borings in the plans. If different soils are encountered, the engineer shall be notified to provide a revised length.

Anchor rod quantity, diameter, and length shall be determined by the tower manufacturer and approved by the Engineer. Each foundation shall have a minimum of 8 anchor rods.

All foundation reinforcement steel shall be epoxy coated.

The cost of reinforcement shall be included in the cost of the foundation.

Steel anchor rod forms shall not be removed for a minimum of 3 days after concrete is poured. The tower shall not be set for a minimum of 7 days or as approved by the Engineer.

Coordinate the rod circle diameter of the tower with the diameter of the anchor rod cage.

The foundation shall be poured monolithically and shall have no construction joints.

Grounding electrodes shall be installed in an access well when there is a conflict in using the method shown.

All dimensions are in inches (millimeters) unless otherwise shown.

Illinois Department of Transportation

PASSED January 1, 2015
ENGINEER OF PREILIMINARY ENGINEERING
APPROVED January 1, 2015
ENGINEER OF DESIGN AND ENVIRONMENT

ISSUED 1-1-10

# LIGHT TOWER FOUNDATION

(Sheet 2 of 2)

**STANDARD 837001–04**

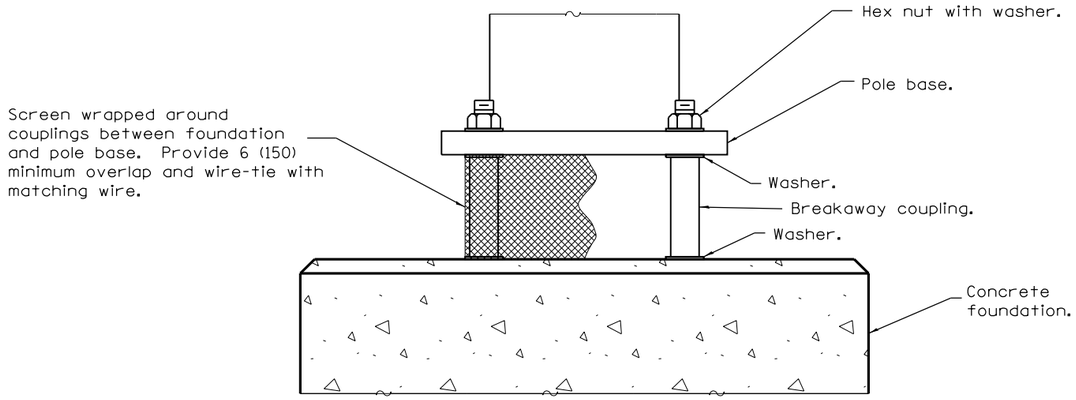


**BREAKAWAY COUPLINGS ON CONCRETE FOUNDATION**

(Provide pole base skirt around screen when required.)

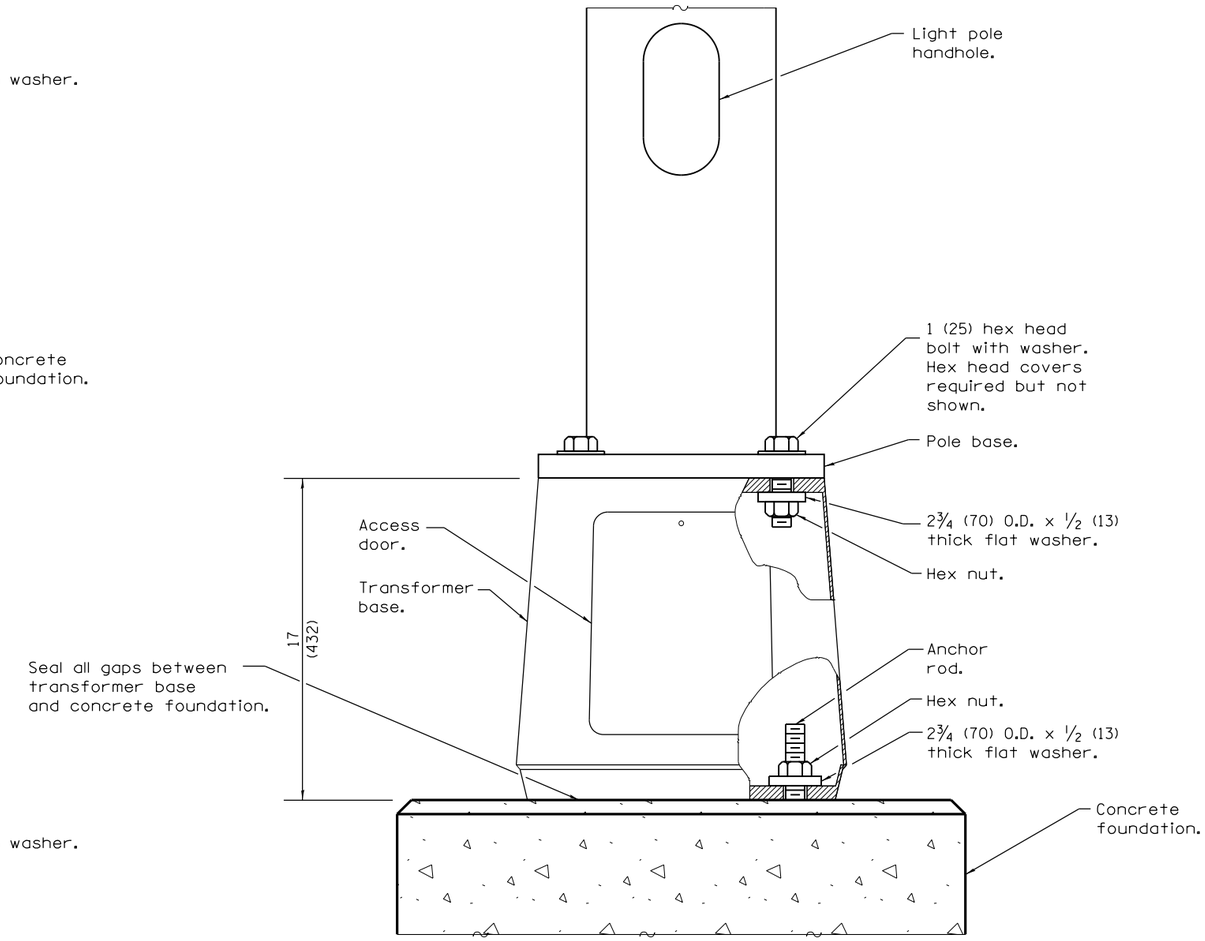


**BREAKAWAY TRANSFORMER BASE**

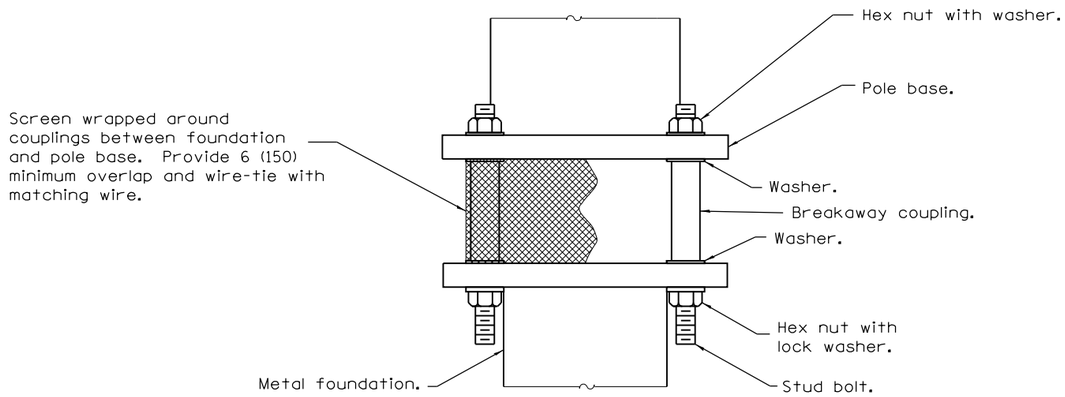


**BREAKAWAY COUPLINGS ON METAL FOUNDATION**

(Provide pole base skirt around screen when required.)

## GENERAL NOTES

See light pole standard for details not shown.

Use largest transformer base bolt circle possible.

Transformer bases shall not be installed on metal foundations.

Washers on top of pole base shall cover the entire bolt slot.

See Standard 836001 for Light Pole Foundation.

All dimensions are in inches (millimeters) unless otherwise shown.

Illinois Department of Transportation

PASSED January 1, 2014
ENGINEER OF PRELIMINARY ENGINEERING

APPROVED January 1, 2014
ENGINEER OF DESIGN AND ENVIRONMENT

ISSUED 1-1-12

| DATE | REVISIONS |
|---|---|
| 1-1-14 | New Standard. |

# BREAKAWAY DEVICES

**STANDARD 838001**

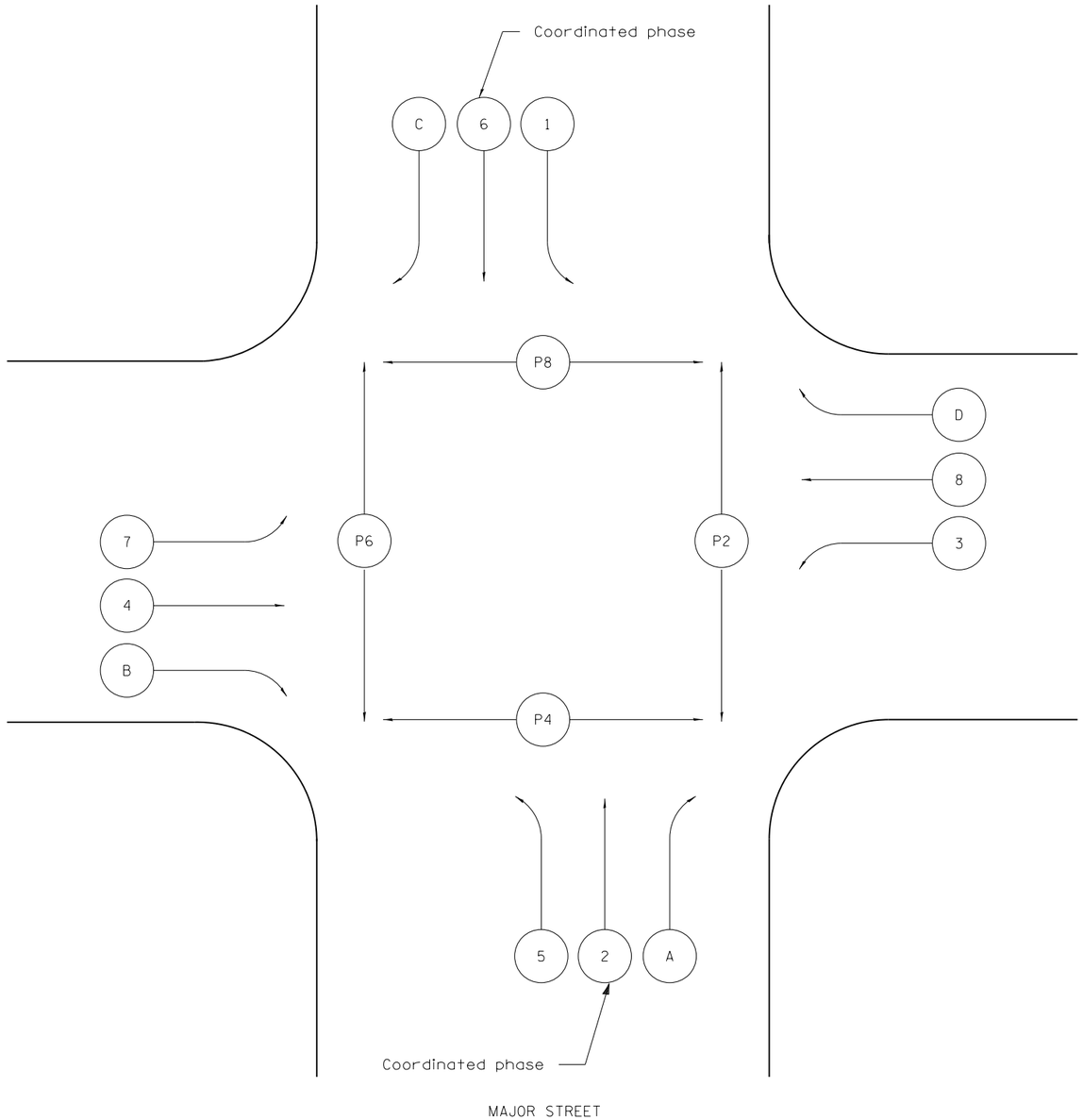


## STANDARD PHASE DESIGNATION DIAGRAM (NEMA)

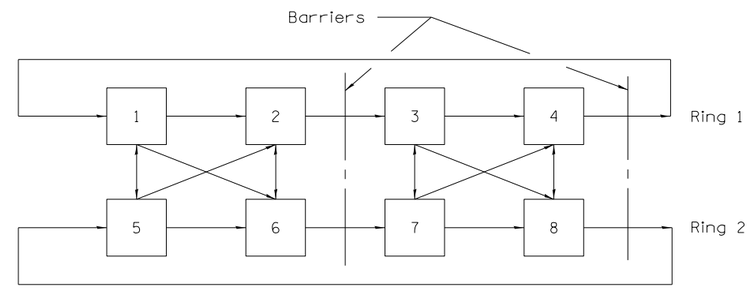


## NEMA EIGHT PHASE DUAL RING ACTUATED CONFIGURATION

### LEGEND

| | |
|---|---|
| (X), [X] | Vehicular phase no. x |
| (PX) | Pedestrian phase no. x |
| (A), (B), (C), (D) | Right turn overlaps where: |
| (A) = (2) + (3) | |
| (B) = (4) + (5) | |
| (C) = (6) + (7) | |
| (D) = (8) + (1) | |
| NEMA | National Electrical Manufacturers Association |

Illinois Department of Transportation

APPROVED January 1, 2009
ENGINEER OF OPERATIONS

APPROVED January 1, 2009
ENGINEER OF DESIGN AND ENVIRONMENT

ISSUED 1-1-97

| DATE | REVISIONS |
|---|---|
| 1-1-09 | Omitted note regarding units of length. |
| 1-1-97 | Renum. Standard 2393-2. |

# STANDARD PHASE DESIGNATION DIAGRAMS AND PHASE SEQUENCES

(Sheet 1 of 2)

STANDARD 857001-01

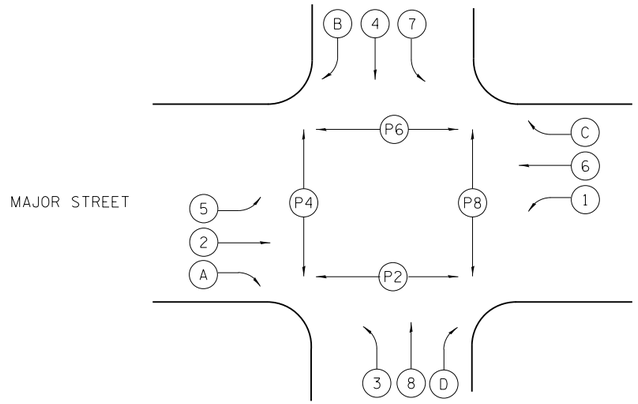


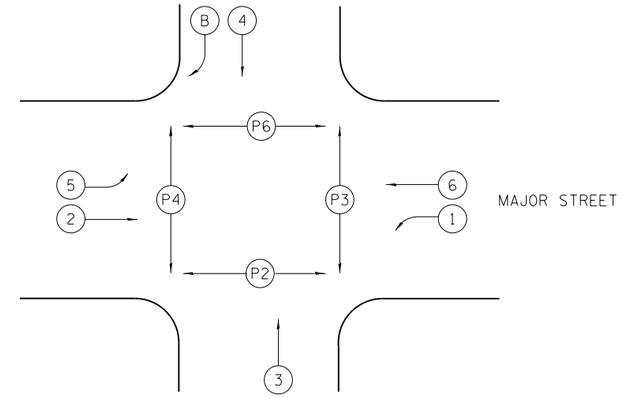


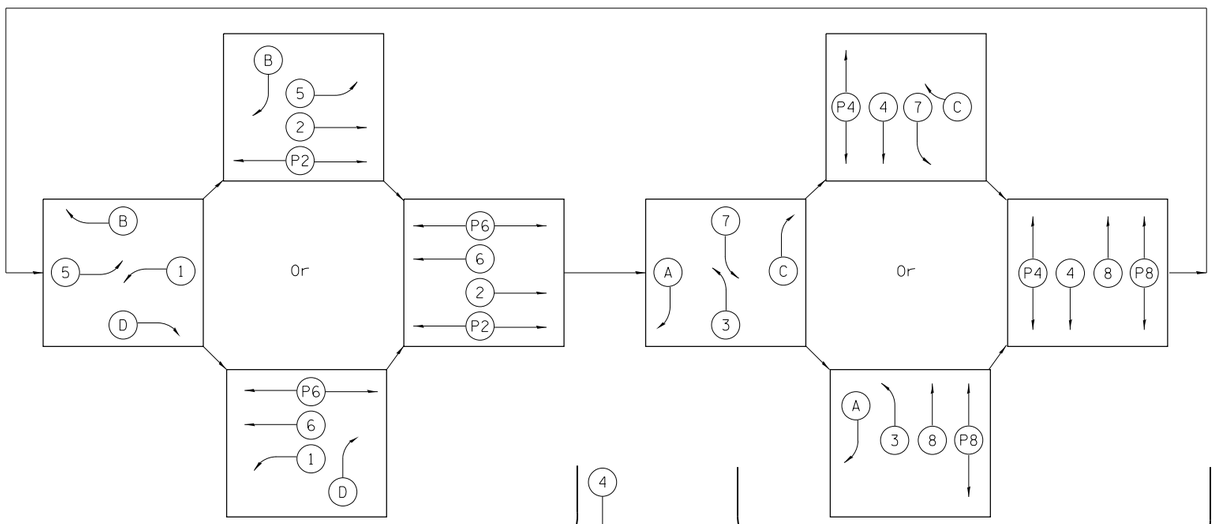


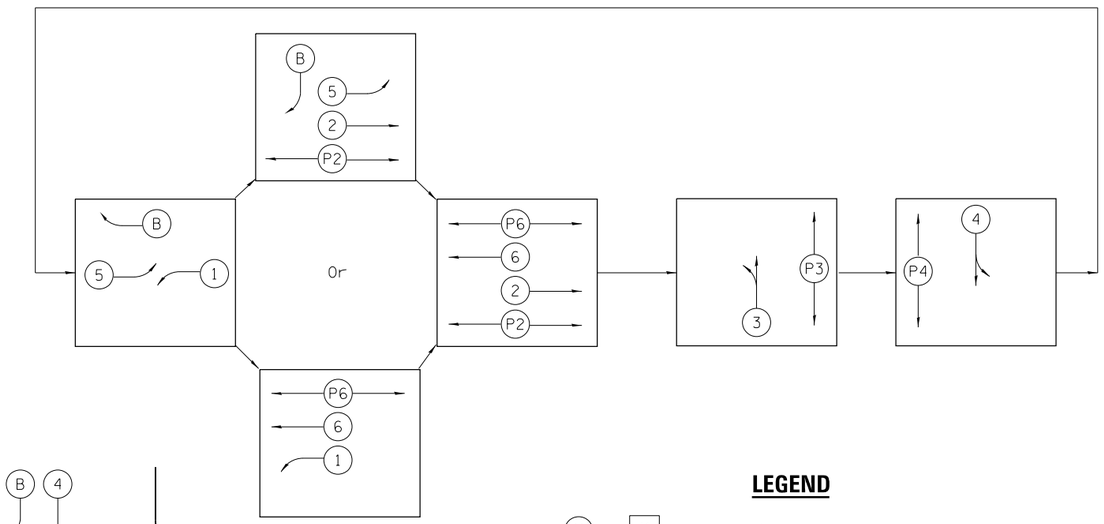


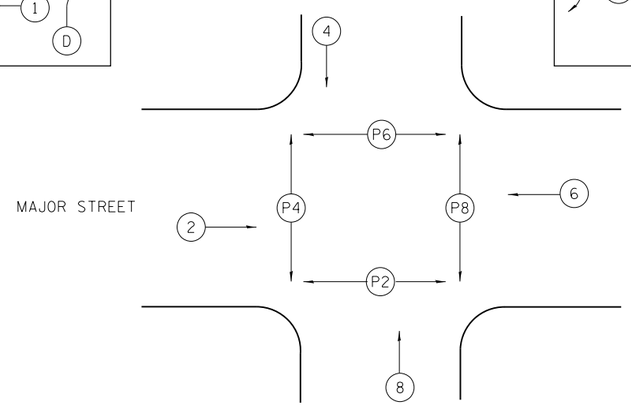


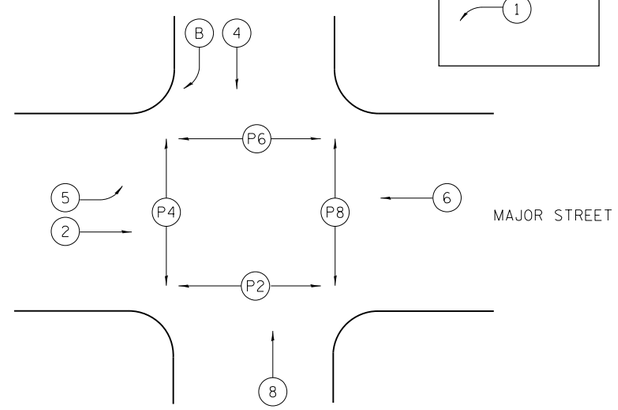


## LEGEND

| | |
|---|---|
| (X), [X] | Vehicular phase no. x |
| (PX) | Pedestrian phase no. x |
| (A), (B), (C), (D) | Right turn overlaps where: |
| (A) = (2) + (3) | |
| (B) = (4) + (5) | |
| (C) = (6) + (7) | |
| (D) = (8) + (1) | |
| NEMA | National Electrical Manufacturers Association |

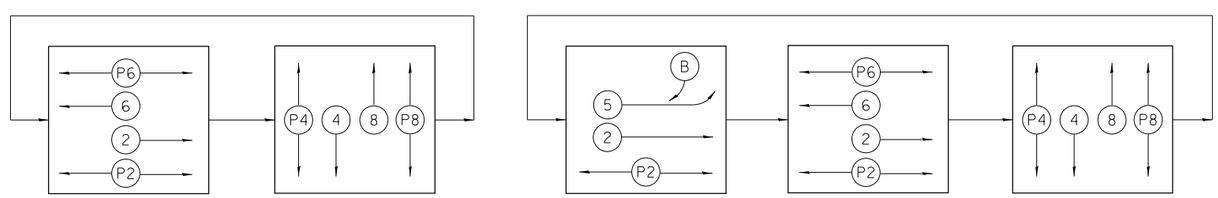

## PHASE DESIGNATION DIAGRAMS AND CORRESPONDING PHASE SEQUENCES

Illinois Department of Transportation

APPROVED January 1, 2009
ENGINEER OF OPERATIONS

APPROVED January 1, 2009
ENGINEER OF DESIGN AND ENVIRONMENT

ISSUED 1-1-97

# STANDARD PHASE DESIGNATION DIAGRAMS AND PHASE SEQUENCES

(Sheet 2 of 2)

STANDARD 857001-01

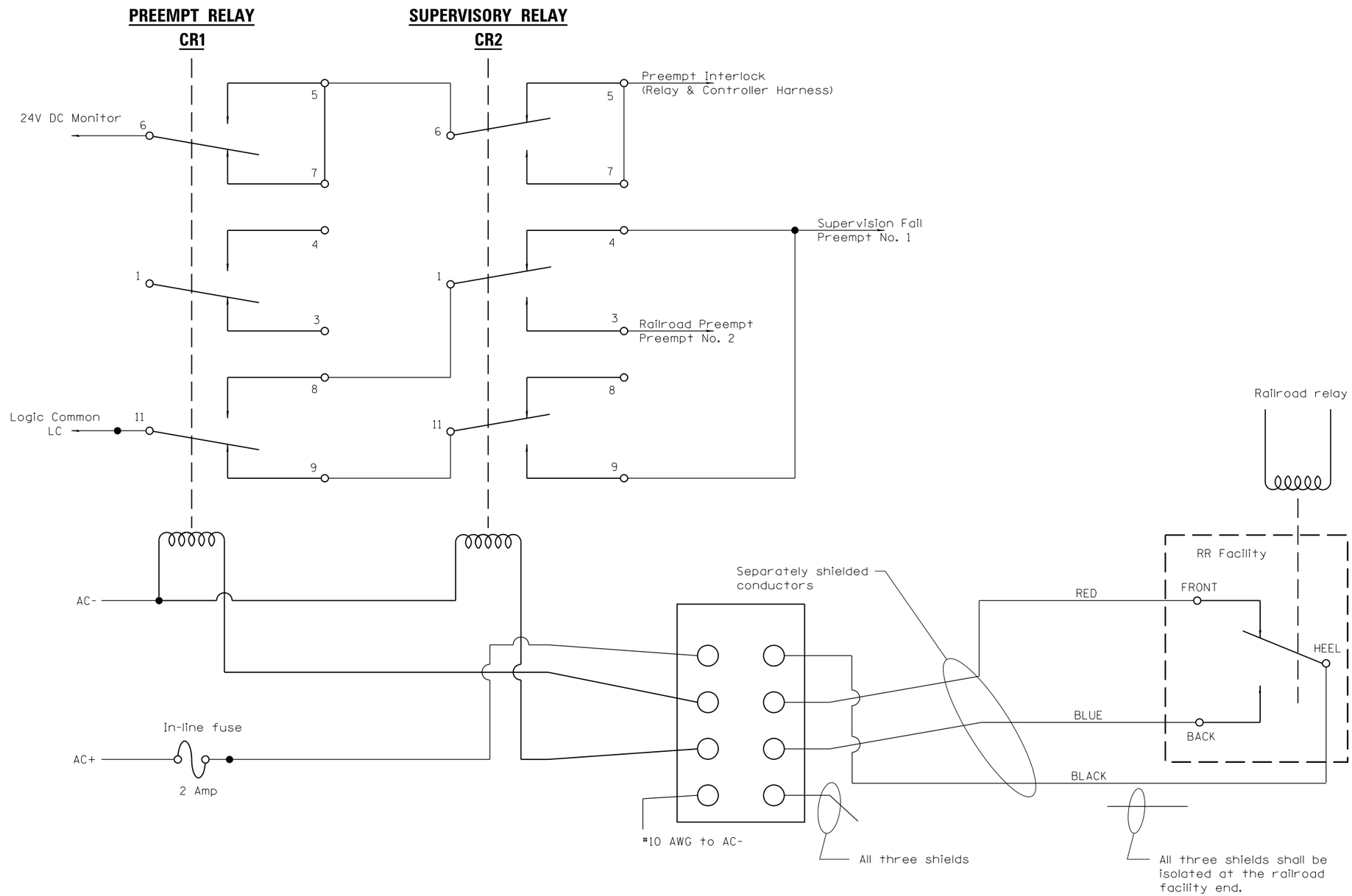


## RELAYS IN NON-PREEMPT STATE – RAILROAD AND PREEMPT RELAYS ENERGIZED

## GENERAL NOTES

CR1 and CR2 are 120VAC 3PDT Relays.

Supervision Fail is Preempt No. 1, causing traffic signal controller to implement all-red flash following track clearance phase.

Railroad Preempt is Preempt No. 2, causing traffic signal controller to implement railroad preemption routine following 1 second delay.

Preempt No. 1 and Preempt No. 2 shall have priority over all other preempts. The railroad preemption routine shall abbreviate each and all active pedestrian phases by immediately entering into flashing DON'T WALK and timing concurrently with the associated vehicle yellow change interval.

Illinois Department of Transportation

APPROVED January 1, 2009
ENGINEER OF OPERATIONS

APPROVED January 1, 2009
ENGINEER OF DESIGN AND ENVIRONMENT

ISSUED 1-1-04

| DATE | REVISIONS |
|---|---|
| 1-1-09 | Omitted note regarding |
| | units of length. |
| | |
| 1-1-04 | New Standard. |
| | |
| | |

# SUPERVISED RAILROAD INTERCONNECT CIRCUIT

STANDARD 857006-01

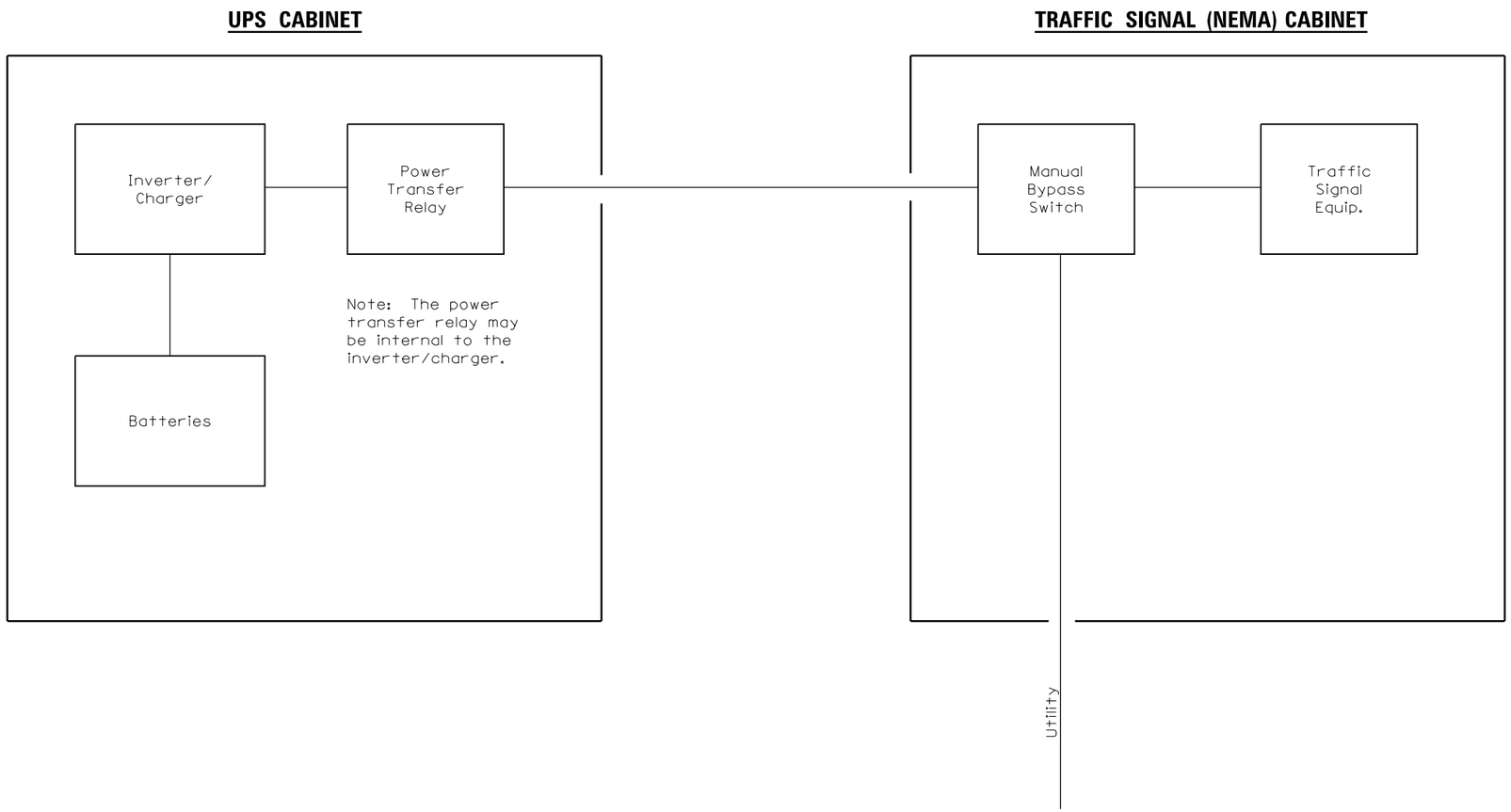


**SINGLE LINE BLOCK DIAGRAM**

Illinois Department of Transportation

APPROVED January 1, 2009
ENGINEER OF OPERATIONS

APPROVED January 1, 2009
ENGINEER OF DESIGN AND ENVIRONMENT

ISSUED 4-1-06

| DATE | REVISIONS |
|---|---|
| 1-1-09 | Omitted note regarding units of length. |
| 4-1-06 | New Standard |

# UNINTERRUPTABLE POWER SUPPLY (UPS)

**STANDARD 862001-01**

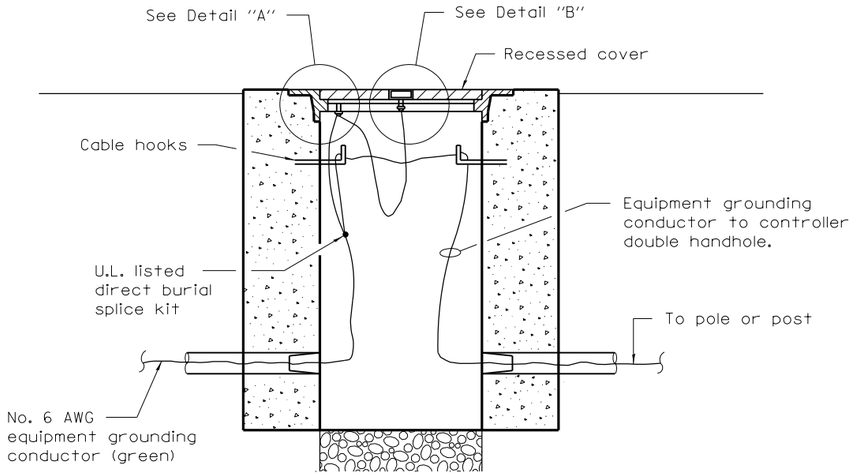


**BONDING A HANDHOLE COVER & FRAME**

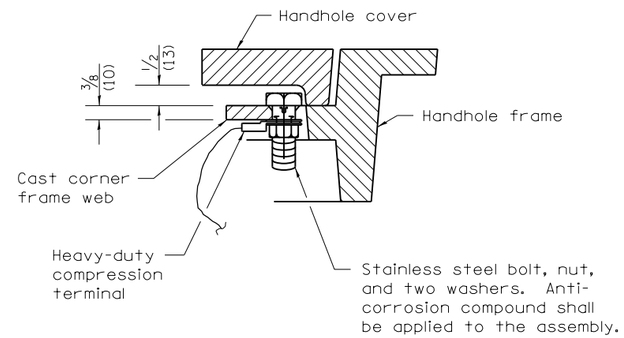


**DETAIL "A"**

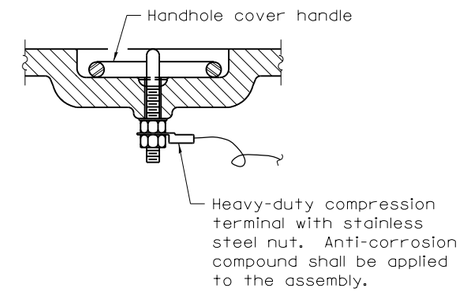


**DETAIL "B"**

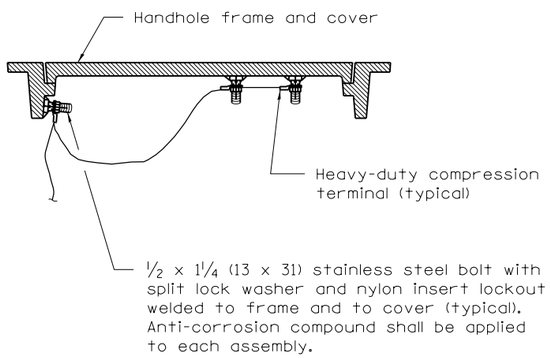


**BONDING AN EXISTING HANDHOLE COVER & FRAME**

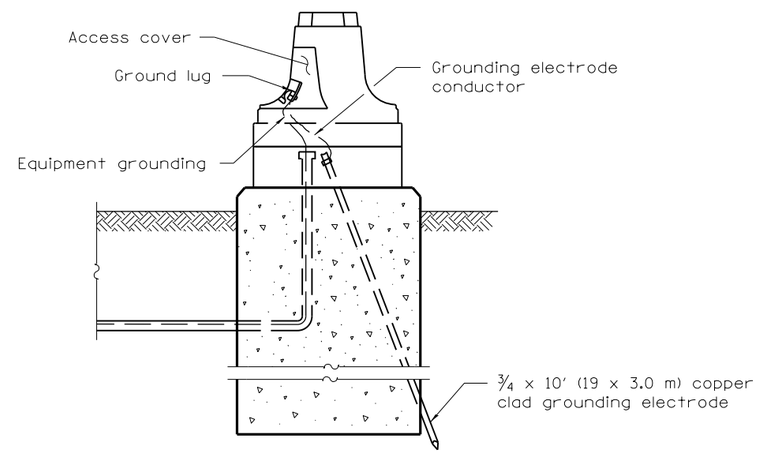


**GROUNDING A MAST ARM POLE/POST**

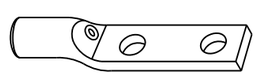

**HEAVY-DUTY COMPRESSION TERMINAL**

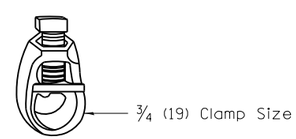


**HEAVY-DUTY GROUND ROD CLAMP**

All dimensions are in inches (millimeters) unless otherwise shown.

Illinois Department of Transportation

APPROVED January 1, 2009
ENGINEER OF OPERATIONS

APPROVED January 1, 2009
ENGINEER OF DESIGN AND ENVIRONMENT

ISSUED 4-1-09

| DATE | REVISIONS |
|---|---|
| 1-1-09 | Switched units to |
| | English (metric). |
| | |
| 1-1-07 | Revised terminology. |
| | |
| | |

# TRAFFIC SIGNAL GROUNDING & BONDING

**STANDARD 873001-02**

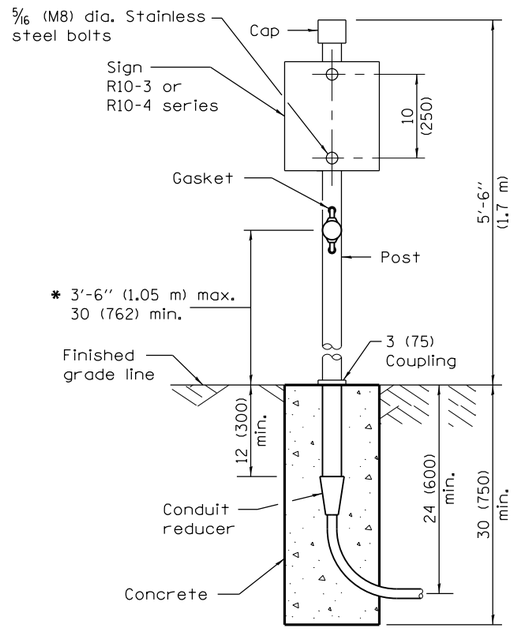


**PEDESTRIAN ONE PUSH BUTTON POST**

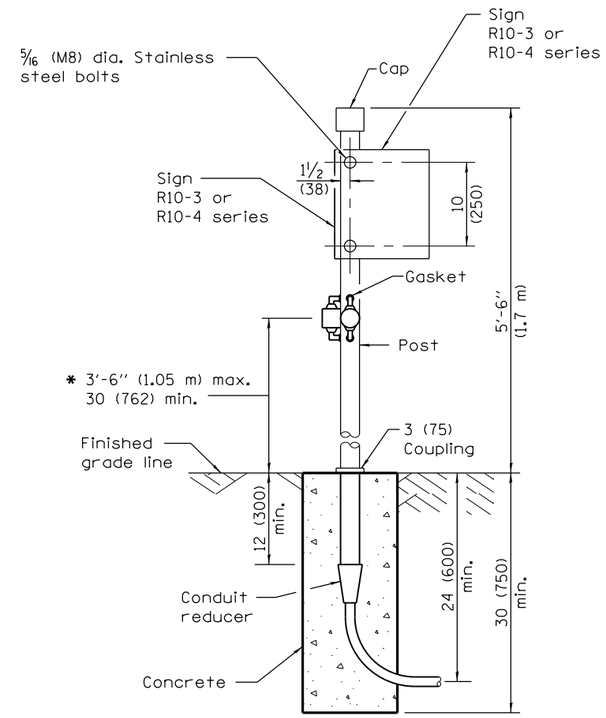


**PEDESTRIAN TWO PUSH BUTTON POST**

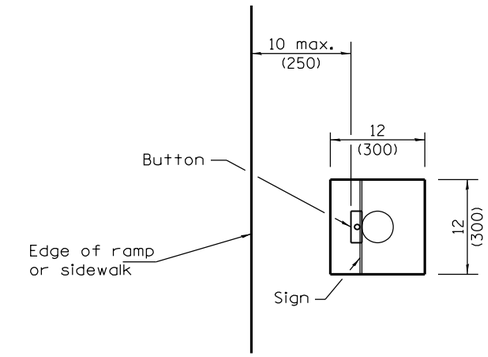


**TOP VIEW**
**TYPICAL ONE BUTTON**

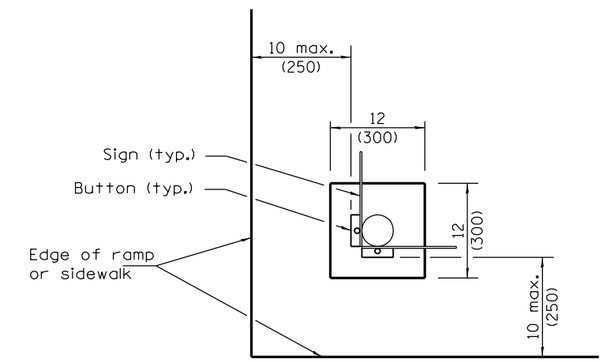


**TOP VIEW**
**TYPICAL TWO BUTTONS**

* 36 (914) prefered

All dimensions are in inches (millimeters) unless otherwise shown.

| DATE | REVISIONS |
|---|---|
| 4-1-16 | Revised sign numbers |
| | for concistency with |
| | current MUTCD. |
| 1-1-14 | Revised and added |
| | dimensions for PROWAG |
| | reach range requirements. |

# PEDESTRIAN PUSH BUTTON POST

**STANDARD 876001–04**

Illinois Department of Transportation

APPROVED April 1, 2016
ENGINEER OF OPERATIONS

APPROVED April 1, 2016
ENGINEER OF DESIGN AND ENVIRONMENT

ISSUED 1-1-07

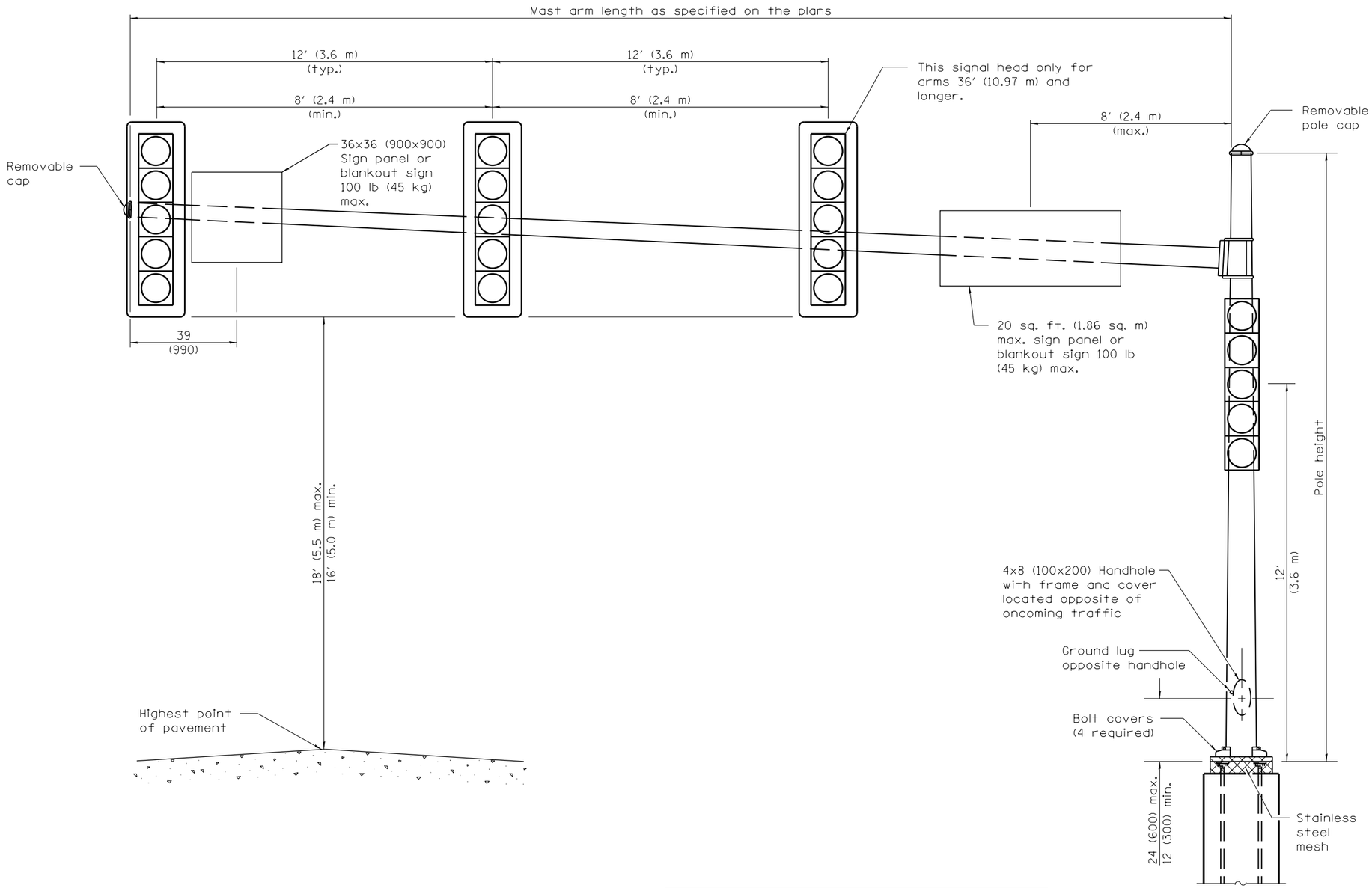


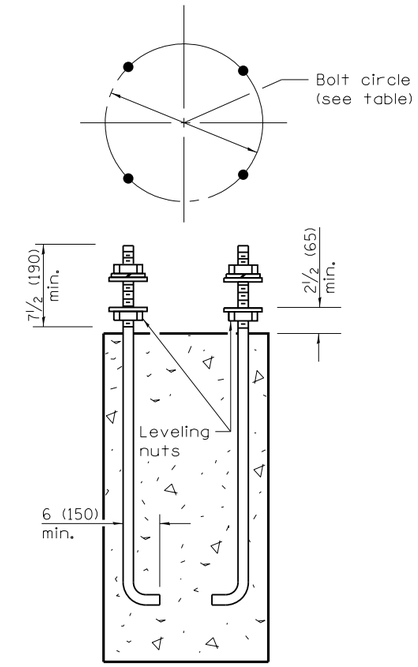


**ANCHOR ROD DETAIL**

| MAST ARM LENGTH | BOLT CIRCLE | ANCHOR ROD SIZE |
|---|---|---|
| 16′ thru 20′ (4.87 m thru 6.10 m) | 15 (380) | 1½ x 5′ (38 x 1.5 m) |
| 22′ thru 30′ (6.71 m thru 9.14 m) | 18 (450) | 1½ x 5′ (38 x 1.5 m) |
| 32′ thru 40′ (9.75 m thru 12.20 m) | 18 (450) | 1¾ x 7′ (44 x 2.10 m) |
| 42′ thru 55′ (12.80 m thru 16.80 m) | 21 (535) | 1¾ x 7′ (44 x 2.10 m) |

## GENERAL NOTES

Signal heads, sign panels, and other attachments are shown for minimum design loading purposes only. Each signal head shall weigh 80 lb (36 kg) and have a projected area of 14.7 sq. ft. (1.37 sq. m).

All dimensions are in inches (millimeters) unless otherwise shown.

| DATE | REVISIONS |
|---|---|
| 4-1-16 | Changed sign panel to 36x36. |
| | Added max. weight of 100 lb. |
| | Modified dim. to outer signal. |
| 1-1-12 | Changed 2.5′x8′ sign panel |
| | to 20 sq. ft. (1.86 sq. m) |
| | max. |

# STEEL MAST ARM ASSEMBLY AND POLE 16′ THROUGH 55′

**STANDARD 877001–06**

Illinois Department of Transportation

APPROVED April 1, 2016
ENGINEER OF OPERATIONS

APPROVED April 1, 2016
ENGINEER OF DESIGN AND ENVIRONMENT

ISSUED 1-1-02

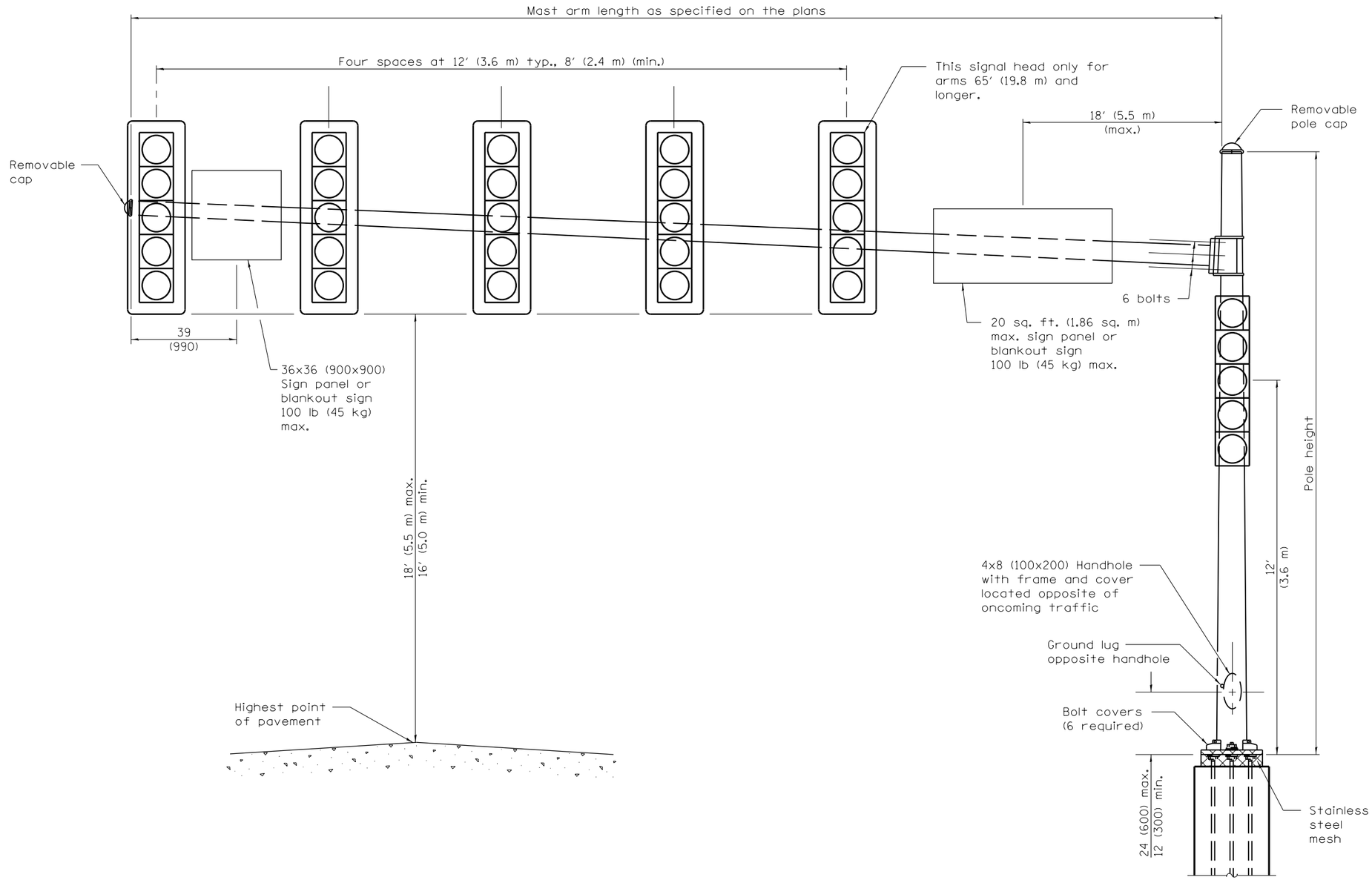


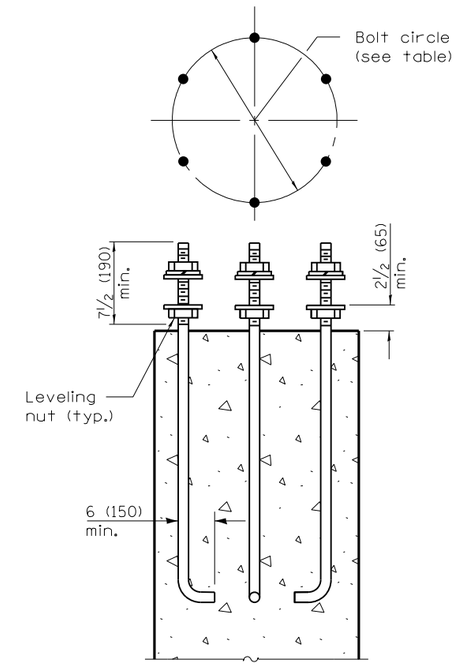


## ANCHOR ROD DETAIL

| MAST ARM LENGTH | BOLT CIRCLE | ANCHOR ROD SIZE |
|---|---|---|
| 56′ thru 64′ (17.1 m thru 19.8 m) | 24 (610) | 1¾ x 7′ (44 x 2.10 m) |
| 65′ thru 75′ (20.1 m thru 22.9 m) | 27 (686) | 2 x 7′-6″ (51 x 2.30 m) |

## GENERAL NOTES

Signal heads, sign panels, and other attachments are shown for minimum design loading purposes only. Each signal head shall weigh 80 lbs. (36 kg) and have a projected area of 14.7 sq. ft. (1.37 sq. m).

All dimensions are in inches (millimeters) unless otherwise shown.

Illinois Department of Transportation

APPROVED April 1, 2016
ENGINEER OF OPERATIONS

APPROVED April 1, 2016
ENGINEER OF DESIGN AND ENVIRONMENT

ISSUED 1-1-08

| DATE | REVISIONS |
|---|---|
| 4-1-16 | Changed sign panel to |
| | 36x36 and 100 lb max. |
| | |
| 1-1-12 | Changed 2.5′x8′ sign panel |
| | to 20 sq. ft. (1.86 sq. m) |
| | max. |

# STEEL MAST ARM ASSEMBLY AND POLE 56′ THROUGH 75′

STANDARD 877002–03

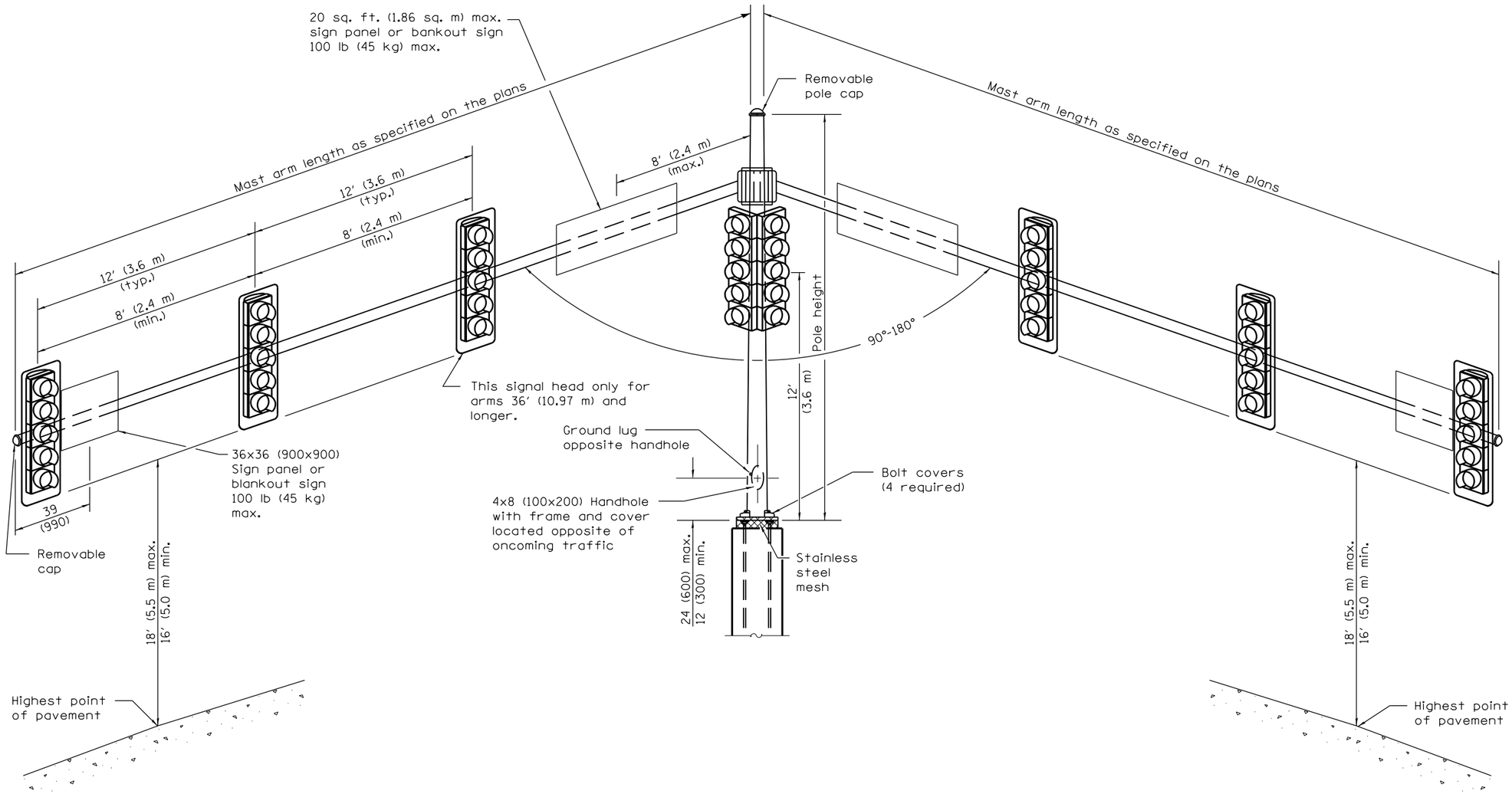


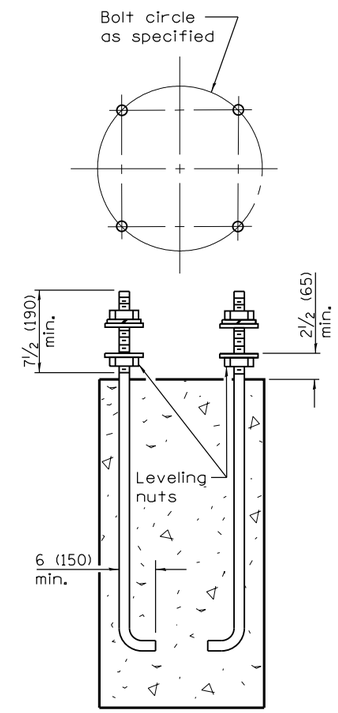


**ANCHOR ROD DETAIL**

| MAST ARM LENGTH | BOLT CIRCLE | ANCHOR ROD SIZE |
|---|---|---|
| 16′ thru 20′<br>(4.87 m thru 6.10 m) | 18<br>(450) | 1½ x 5′<br>(38 x 1.5 m) |
| 22′ thru 30′<br>(6.71 m thru 9.14 m) | 18<br>(450) | 1¾ x 7′<br>(44 x 2.10 m) |
| 32′ thru 38′<br>(9.75 m thru 11.60 m) | 18<br>(450) | 2 x 7′-6″<br>(51 x 2.30 m) |
| 40′ thru 55′<br>(12.20 m thru 16.80 m) | 21<br>(535) | 2 x 7′-6″<br>(51 x 2.30 m) |

## GENERAL NOTES

Signal heads, sign panels, and other attachments are shown for minimum design loading purposes only. Each signal head shall weigh 80 lb (36 kg) and have a projected area of 14.7 sq. ft. (1.37 sq. m).

All dimensions are in inches (millimeters) unless otherwise shown.

Illinois Department of Transportation

APPROVED April 1, 2016
ENGINEER OF OPERATIONS

APPROVED April 1, 2016
ENGINEER OF DESIGN AND ENVIRONMENT

ISSUED 1-1-02

| DATE | REVISIONS |
|---|---|
| 4-1-16 | Changed sign panel to 36x36. |
| | Added max weight of 100 lb. |
| | Modified dim. to outer signal. |
| 1-1-12 | Changed 2.5′x8′ sign panel |
| | to 20 sq. ft. (1.86 sq. m) |
| | max. |

# STEEL MAST ARM ASSEMBLY AND POLE WITH DUAL MAST ARMS

**STANDARD 877006–05**

## TENON TOP FOR VERTICAL MOUNTED LUMINAIRES

Note: The tenon top shall support a bullhorn fitting with two (twin) vertically mounted luminaires (clamp-mounted bullhorn assembly with removable pole cap acceptable). Each luminaire shall weigh 100 lb (45 kg) and have an effective projected (EPA) area of 3.85 sq. ft. (0.36 sq. m).

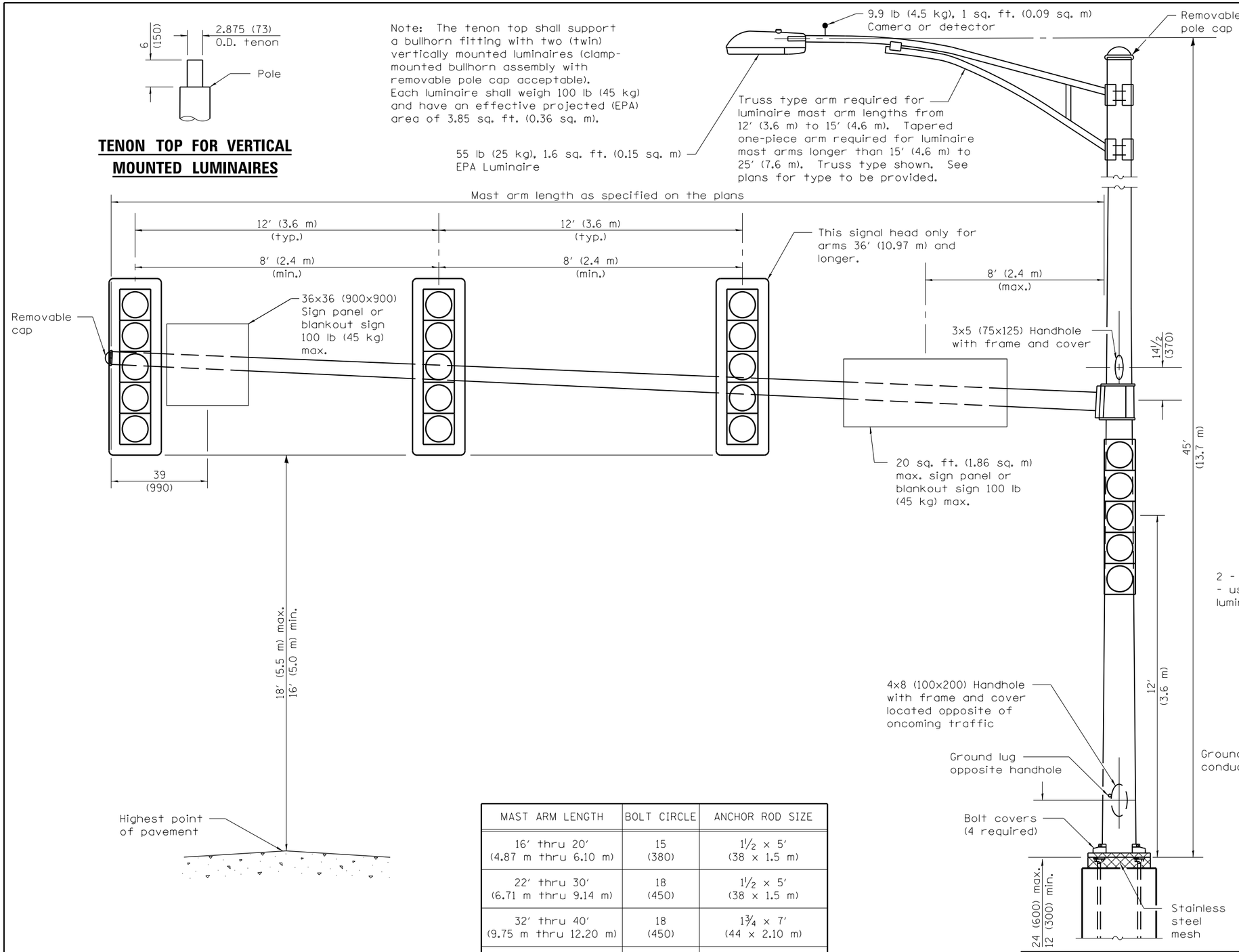


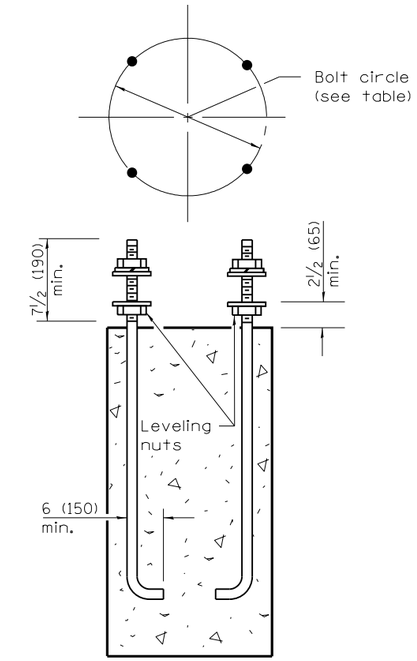


## ANCHOR ROD DETAIL

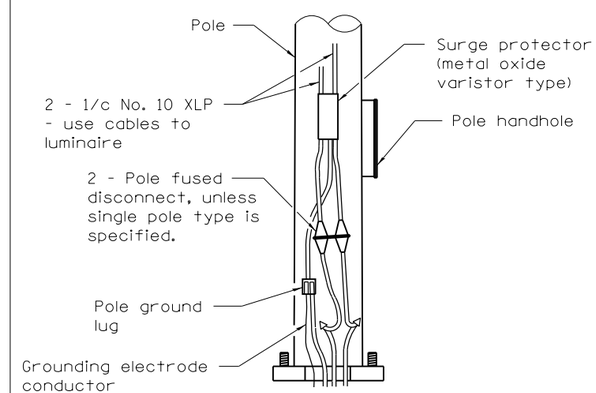


## POLE BASE DETAIL

| MAST ARM LENGTH | BOLT CIRCLE | ANCHOR ROD SIZE |
|---|---|---|
| 16′ thru 20′ (4.87 m thru 6.10 m) | 15 (380) | 1½ x 5′ (38 x 1.5 m) |
| 22′ thru 30′ (6.71 m thru 9.14 m) | 18 (450) | 1½ x 5′ (38 x 1.5 m) |
| 32′ thru 40′ (9.75 m thru 12.20 m) | 18 (450) | 1¾ x 7′ (44 x 2.10 m) |
| 42′ thru 55′ (12.80 m thru 16.80 m) | 21 (535) | 1¾ x 7′ (44 x 2.10 m) |

## GENERAL NOTES

Signal heads, sign panels, and other attachments are shown for minimum design loading purposes only. Each signal head shall weigh 80 lb (36 kg) and have a projected area of 14.7 sq. ft. (1.37 sq. m).

All dimensions are in inches (millimeters) unless otherwise shown.

Illinois Department of Transportation

APPROVED April 1, 2016
ENGINEER OF OPERATIONS

APPROVED April 1, 2016
ENGINEER OF DESIGN AND ENVIRONMENT

ISSUED 1-1-02

| DATE | REVISIONS |
|---|---|
| 4-1-16 | Modified luminaire arm note. |
| | Changed sign panel to 36x36 |
| | and 100 lb max. |
| 1-1-12 | Changed 2.5′x8′ sign panel |
| | to 20 sq. ft. (1.86 sq. m) |
| | max. |

# STEEL COMB. MAST ARM ASSEMBLY AND POLE 16′ THROUGH 55′

**STANDARD 877011–06**

## TENON TOP FOR VERTICAL MOUNTED LUMINAIRES

Note: The tenon top shall support a bullhorn fitting with two (twin) vertically mounted luminaires (clamp-mounted bullhorn assembly with removable pole cap acceptable). Each luminaire shall weigh 100 lb (45 kg) and have an effective projected (EPA) area of 3.85 sq. ft. (0.36 sq. m).

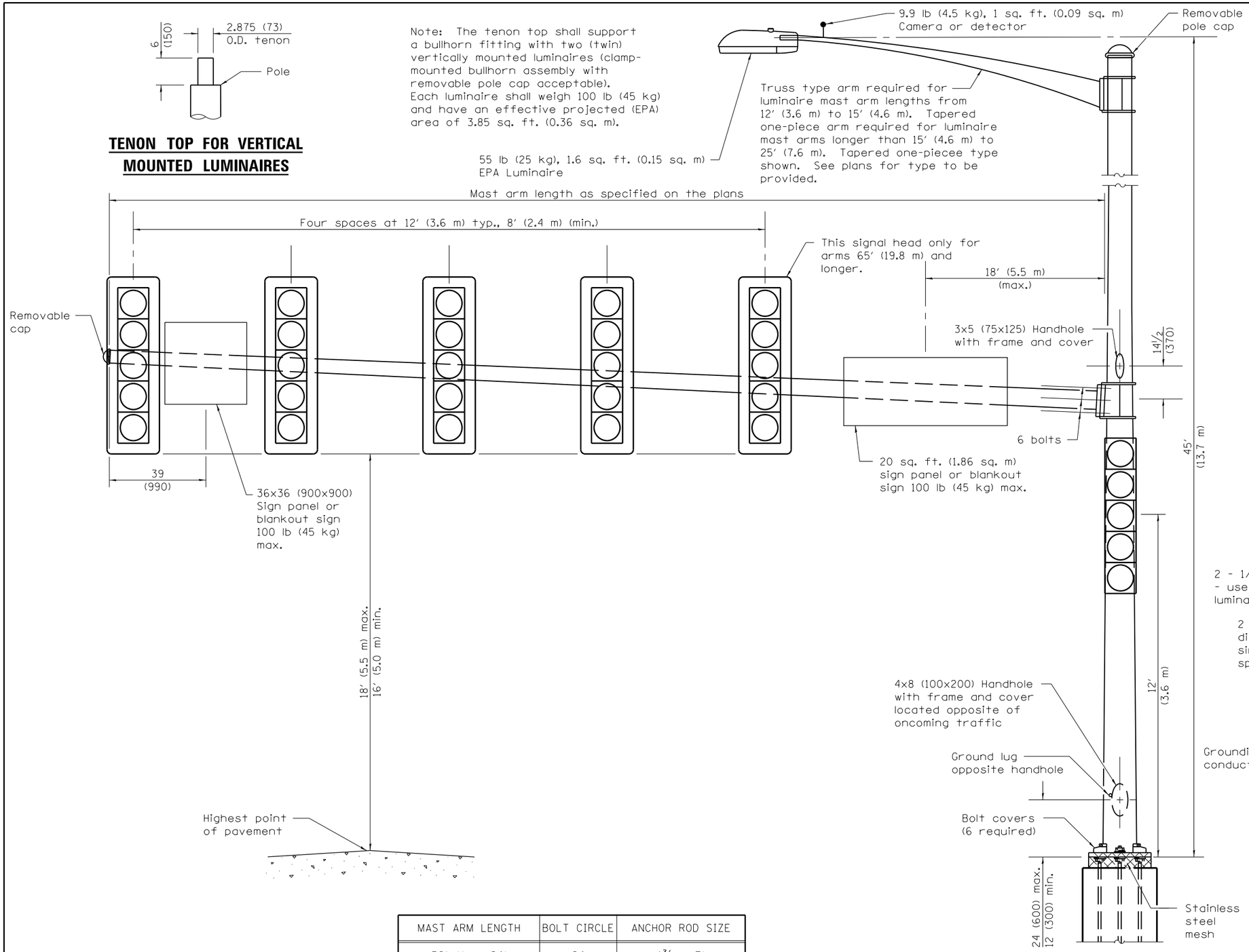


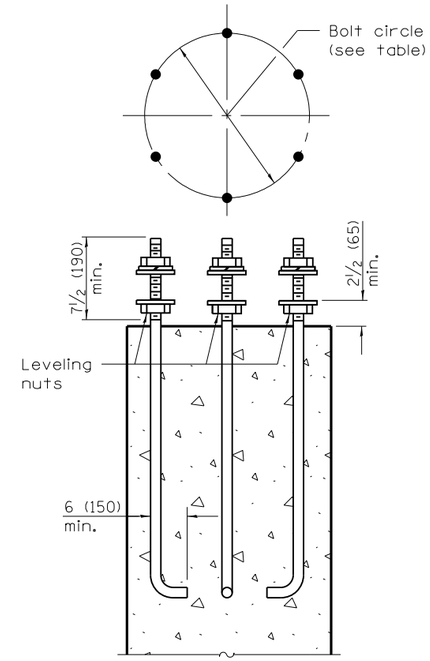


## ANCHOR ROD DETAIL

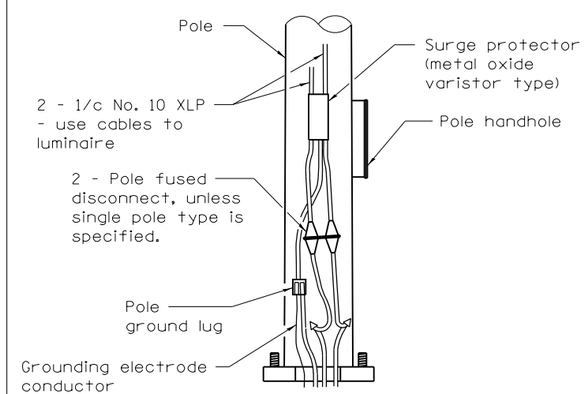


## POLE BASE DETAIL

| MAST ARM LENGTH | BOLT CIRCLE | ANCHOR ROD SIZE |
|---|---|---|
| 56′ thru 64′ (17.1 m thru 19.8 m) | 24 (610) | 1¾ x 7′ (44 x 2.10 m) |
| 65′ thru 75′ (20.1 thru 22.9 m) | 27 (686) | 2 x 7′-6″ (51 x 2.30 m) |

## GENERAL NOTES

Signal heads, sign panels, and other attachments are shown for minimum design loading purposes only. Each signal head shall weigh 80 lb (36 kg) and have a projected area of 14.7 sq. ft. (1.37 sq. m).

All dimensions are in inches (millimeters) unless otherwise shown.

Illinois Department of Transportation

APPROVED April 1, 2016
ENGINEER OF OPERATIONS

APPROVED April 1, 2016
ENGINEER OF DESIGN AND ENVIRONMENT

ISSUED 1-1-08

| DATE | REVISIONS |
|---|---|
| 4-1-16 | Modified luminaire arm note. |
| | Changed sign panel to 36x36 |
| | and 100 lb. max. |
| 1-1-12 | Changed 2.5′x8′ sign panel |
| | to 20 sq. ft. (1.86 sq. m) |
| | max. |

# STEEL COMB. MAST ARM ASSEMBLY AND POLE 56′ THROUGH 75′

**STANDARD 877012–03**

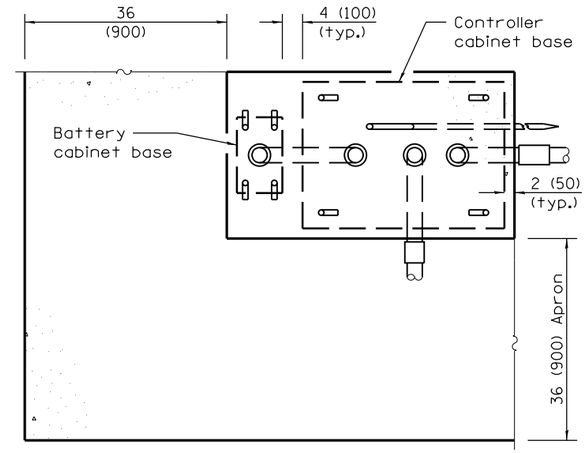


**TOP VIEW**

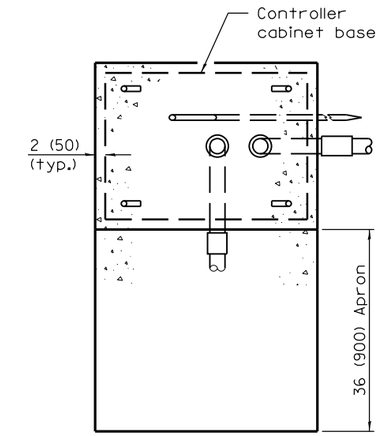


**TOP VIEW**

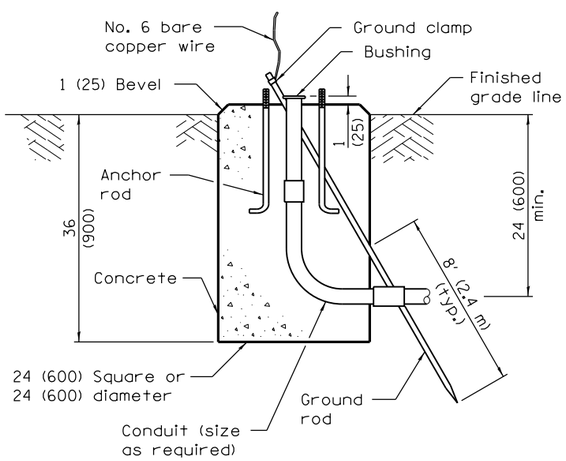


**TYPE A**

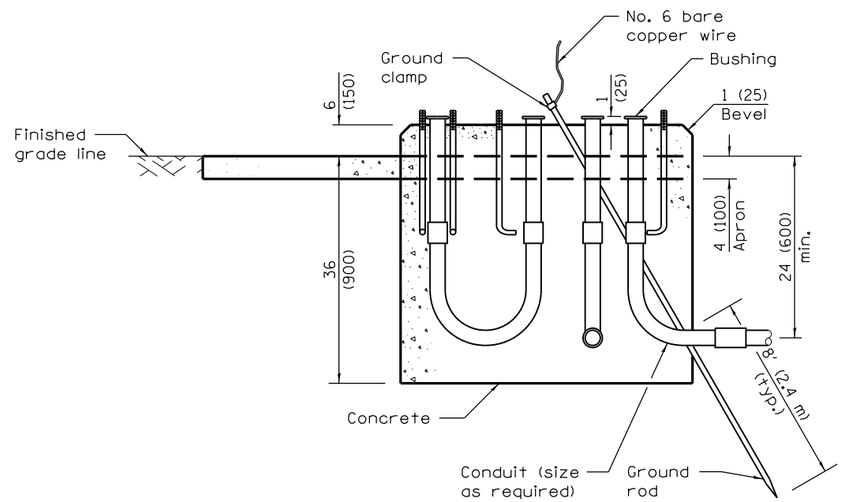


**TYPE C**
**FOR GROUND MOUNTED**
**CONTROLLER CABINET**
**AND UPS BATTERY CABINET**

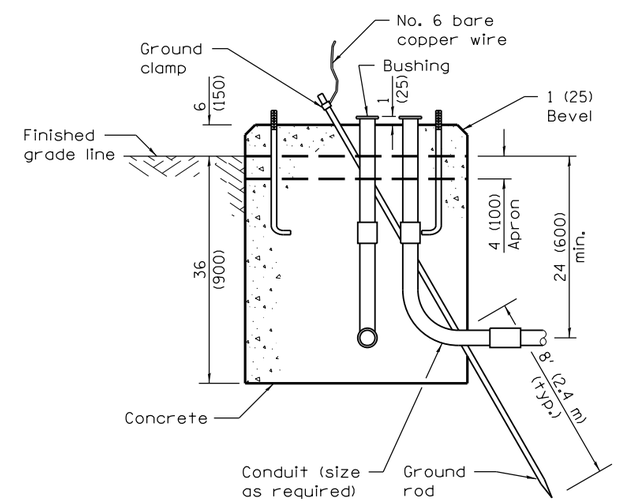


**TYPE D**
**FOR GROUND MOUNTED**
**CONTROLLER CABINET**

All dimensions are in inches (millimeters)
unless otherwise shown.

Illinois Department of Transportation

APPROVED January 1, 2015
ENGINEER OF OPERATIONS

APPROVED January 1, 2015
ENGINEER OF DESIGN AND ENVIRONMENT

ISSUED 1-1-02

| DATE | REVISIONS |
|---|---|
| 1-1-15 | Revised TYPE E detail. |
| | |
| | |
| 1-1-12 | Replaced rebar No.'s |
| | with 'Vertical' for TYPE E |
| | foundation detail. |

# CONCRETE FOUNDATION DETAILS

(Sheet 1 of 2)

**STANDARD 878001–10**

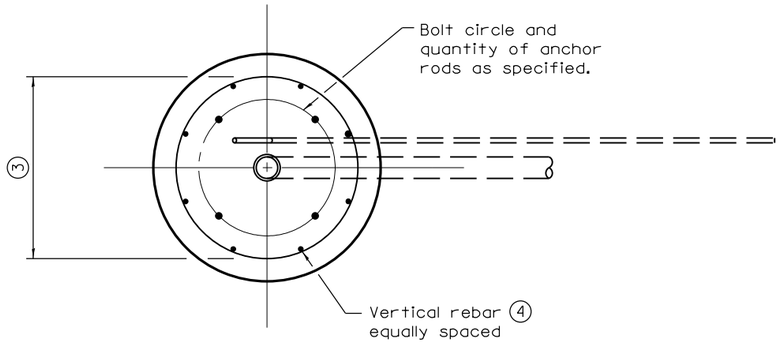


**TOP VIEW**

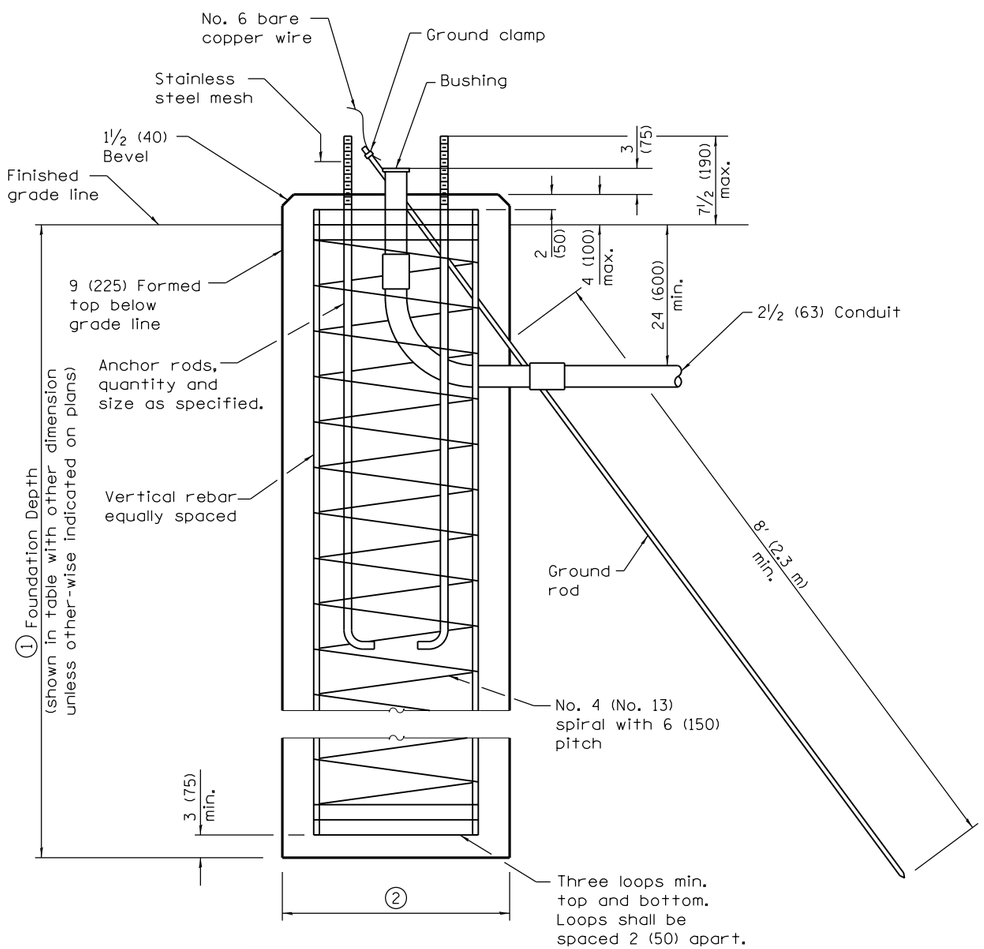


**TYPE E**

| Mast Arm Length | ① Foundation Depth • | ② Foundation Diameter | ③ Spiral Diameter | ④ Quantity of Rebars | Size of Rebars |
|---|---|---|---|---|---|
| Less than 30' (9.1 m) | 10'-0" (3.0 m) | 30 (750) | 24 (600) | 8 | 6 (19) |
| Greater than or equal to 30' (9.1 m) and less than 40' (12.2 m) | 13'-6" (4.1 m) | 30 (750) | 24 (600) | 8 | 6 (19) |
| | 11'-0" (3.4 m) | 36 (900) | 30 (750) | 12 | 7 (22) |
| Greater than or equal to 40' (12.2 m) and less than 50' (15.2 m) | 13'-0" (4.0 m) | 36 (900) | 30 (750) | 12 | 7 (22) |
| Greater than or equal to 50' (15.2 m) and up to 55' (16.8 m) | 15'-0" (4.6 m) | 36 (900) | 30 (750) | 12 | 7 (22) |
| Greater than or equal to 56' (16.8 m) and less than 65' (19.8 m) | 21'-0" (6.4 m) | 42 (1060) | 36 (900) | 16 | 8 (25) |
| Greater than or equal to 65' (19.8 m) and up to 75' (22.9 m) | 25'-0" (7.6 m) | 42 (1060) | 36 (900) | 16 | 8 (25) |

• For standard and combination mast arm assemblies. Foundation depths for standard dual mast arms with the longest arm length upto and including 55' (16.8 m) shall be increased by 1' (0.3 m) of that shown in the table, based on the longer of the two arms.

These foundation depths are for sites which have cohesive soils (clayey silt, sandy clay, etc.) along the length of the shaft, with an average Unconfined Compressive Strength (Qu) > 1.0 tsf (100 kpa). This strength shall be verified by boring data prior to construction or with testing by the Engineer during foundation drilling. The Bureau of Bridges & Structures should be contacted for a revised design if other conditions are encountered.

Illinois Department of Transportation

APPROVED January 1, 2015
ENGINEER OF OPERATIONS

APPROVED January 1, 2015
ENGINEER OF DESIGN AND ENVIRONMENT

ISSUED 1-1-02

# CONCRETE FOUNDATION DETAILS

(Sheet 2 of 2)

**STANDARD 878001–10**

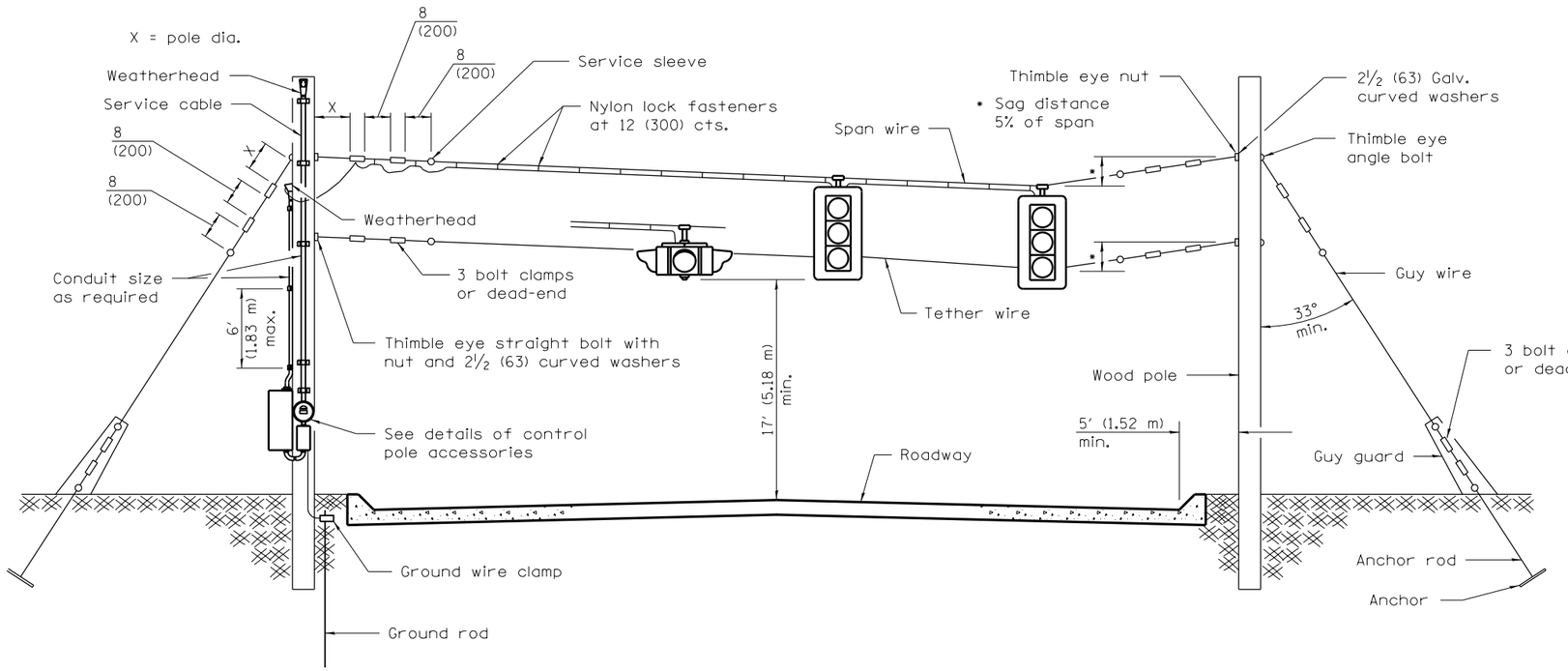


## SPAN WIRE MOUNTED SIGNALS AND FLASHING BEACON

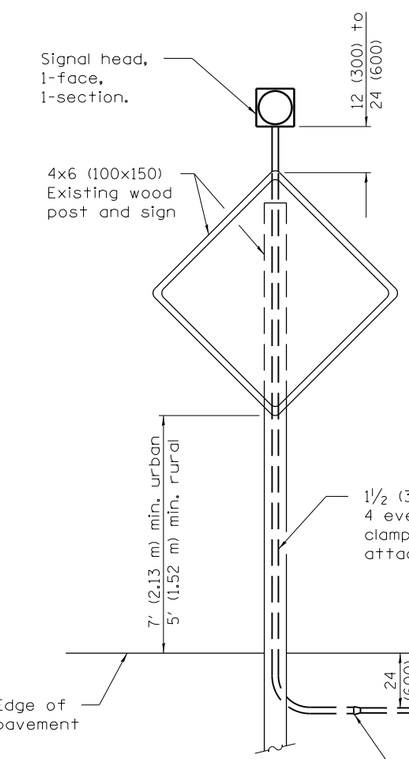


## POST MOUNTED FLASHING BEACON

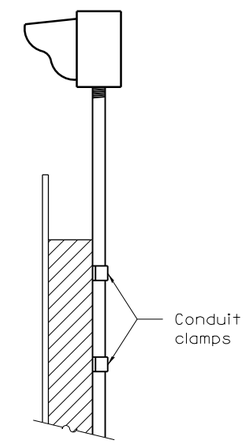


## MOUNTING DETAIL

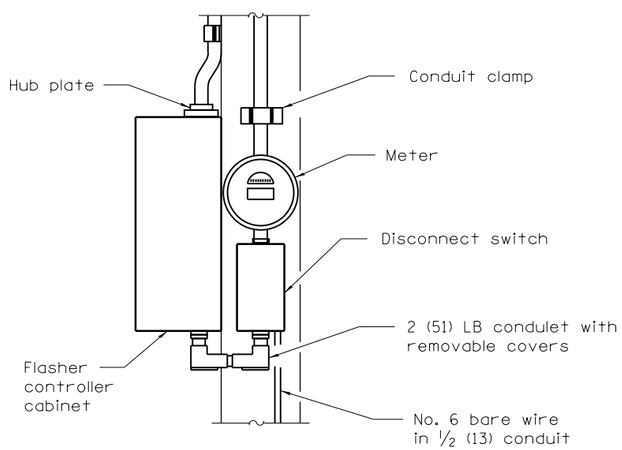


## CONTROL POLE DETAIL

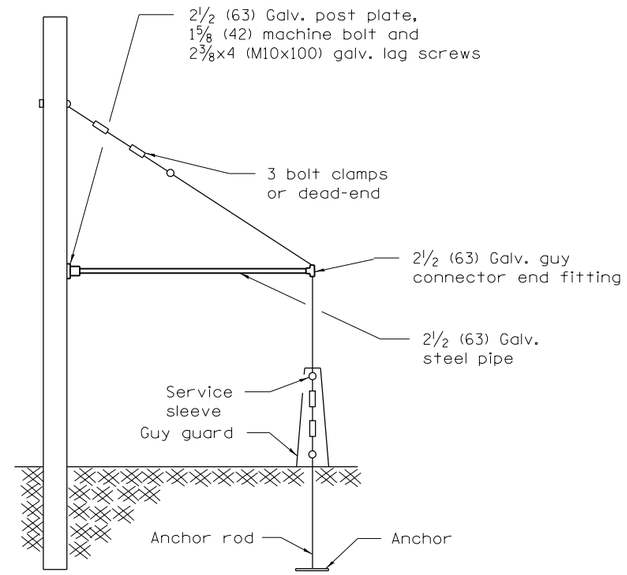


## SIDEWALK GUY DETAIL

All dimensions are in inches (millimeters) unless otherwise shown.

| DATE | REVISIONS |
|---|---|
| 1-1-09 | Switched units to |
| | English (metric). |
| | |
| 1-1-02 | Renum. Standard 840001. |
| | |
| | |

# SPAN WIRE MOUNTED SIGNALS AND FLASHING BEACON INSTALLATION

**STANDARD 880001–01**

Illinois Department of Transportation

APPROVED January 1, 2009
ENGINEER OF OPERATIONS

APPROVED January 1, 2009
ENGINEER OF DESIGN AND ENVIRONMENT

ISSUED 1-1-02

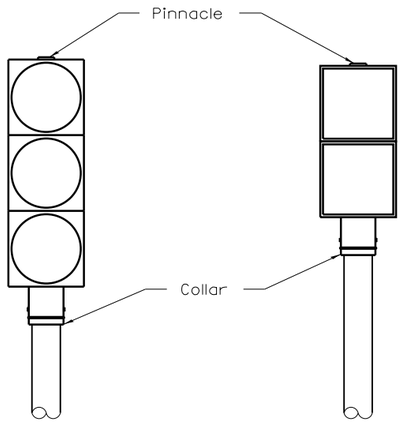


**POST MOUNTED TRAFFIC SIGNAL HEAD**

**POST MOUNTED PEDESTRIAN SIGNAL HEAD**

**ONE WAY**

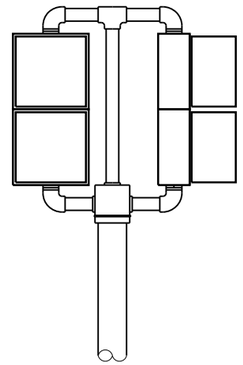

**POST MOUNTED PEDESTRIAN SIGNAL HEAD**

**TWO WAY**

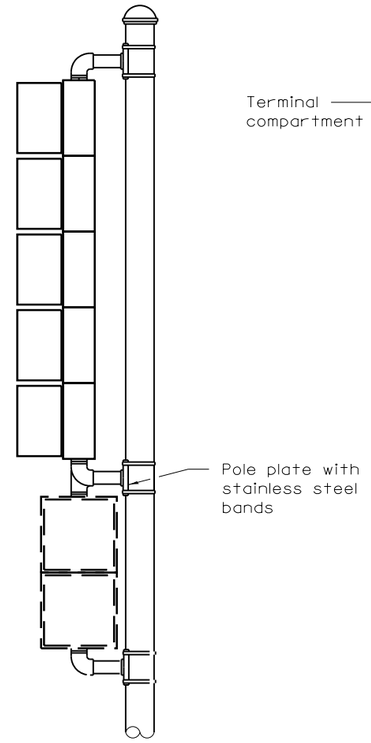


**BRACKET MOUNTED TRAFFIC SIGNAL HEAD**

**ONE WAY**

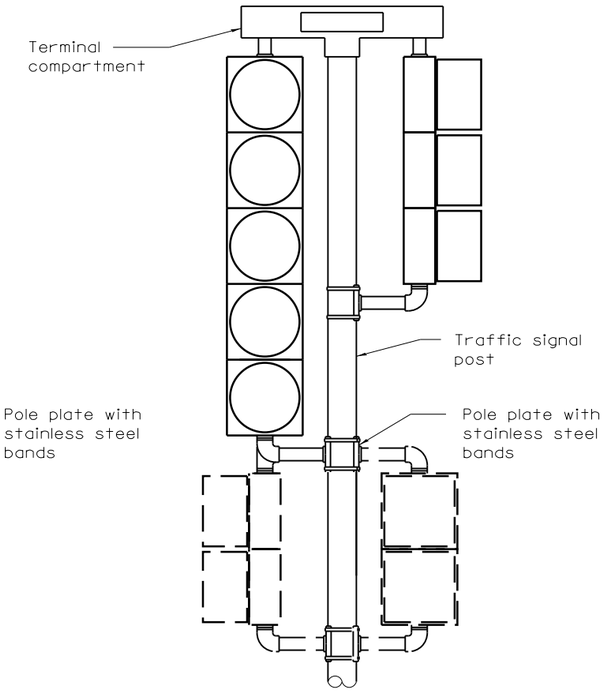


**BRACKET MOUNTED TRAFFIC SIGNAL HEAD**

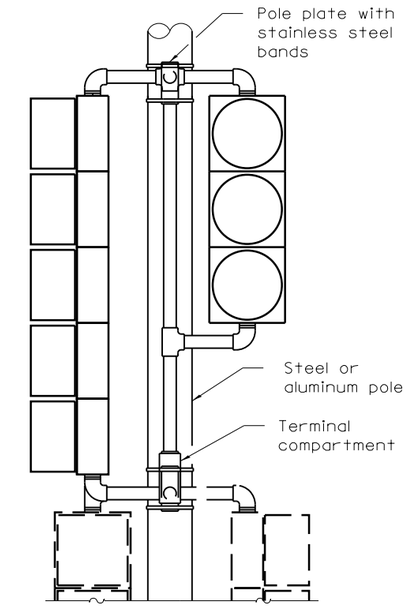


**BRACKET MOUNTED TRAFFIC SIGNAL HEAD**

**TWO WAY**

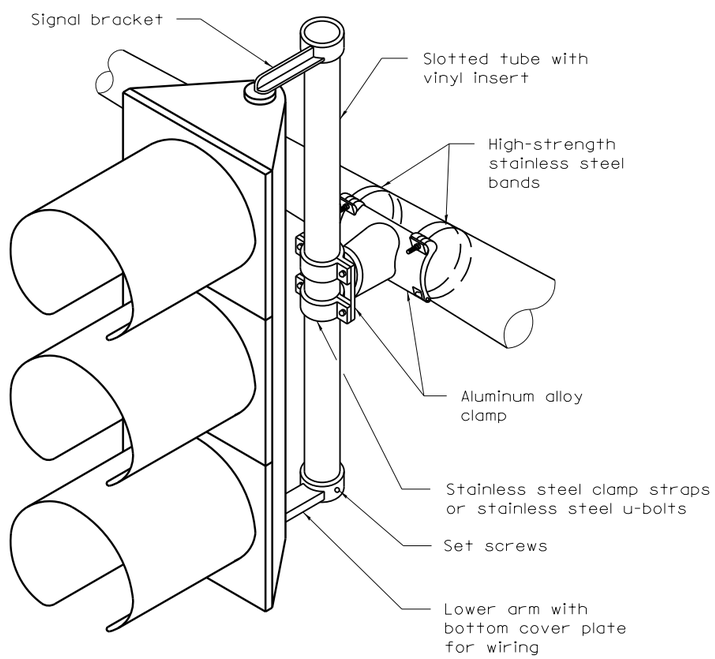


**STEEL MAST ARM MOUNTING**

Illinois Department of Transportation

APPROVED January 1, 2009
ENGINEER OF OPERATIONS

APPROVED January 1, 2009
ENGINEER OF DESIGN AND ENVIRONMENT

ISSUED 1-1-02

| DATE | REVISIONS |
|---|---|
| 1-1-09 | Omitted note regarding |
| | units of length. |
| | |
| 1-1-02 | Renum. Standard 840006. |
| | |
| | |

# TRAFFIC SIGNAL MOUNTING DETAILS

**STANDARD 880006–01**

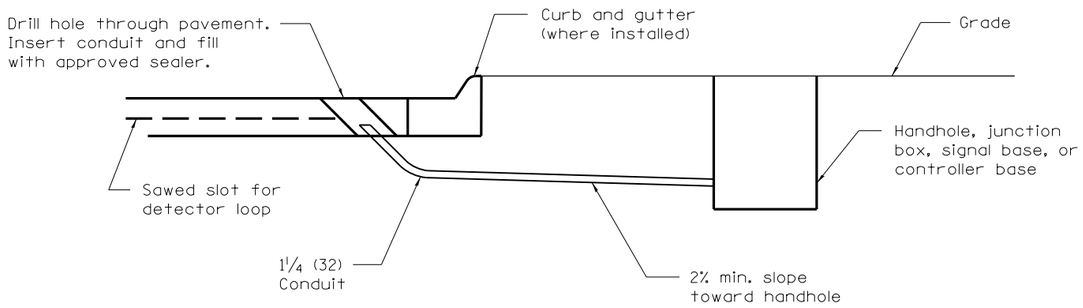


## DETECTOR LOOP LEAD–IN

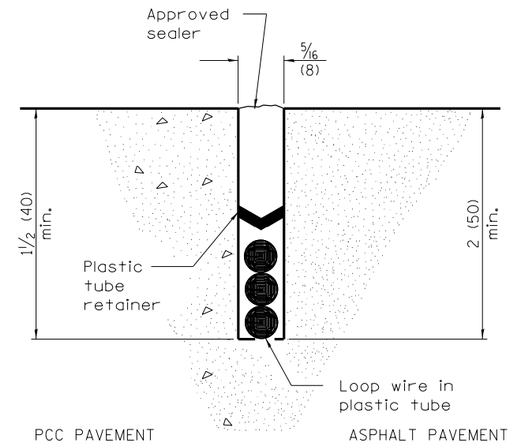


## DETECTOR LOOP INSTALLATION

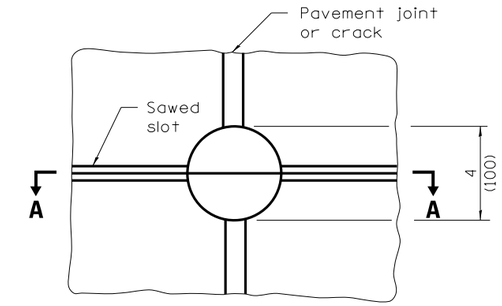


## PLAN

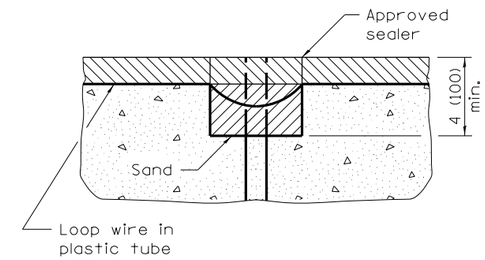


## SECTION A–A

NOTE
Loop wire shall follow saw cut to bottom, forming slack section at joint.

## DETECTOR LOOP AT PAVEMENT JOINT OR PAVEMENT CRACK

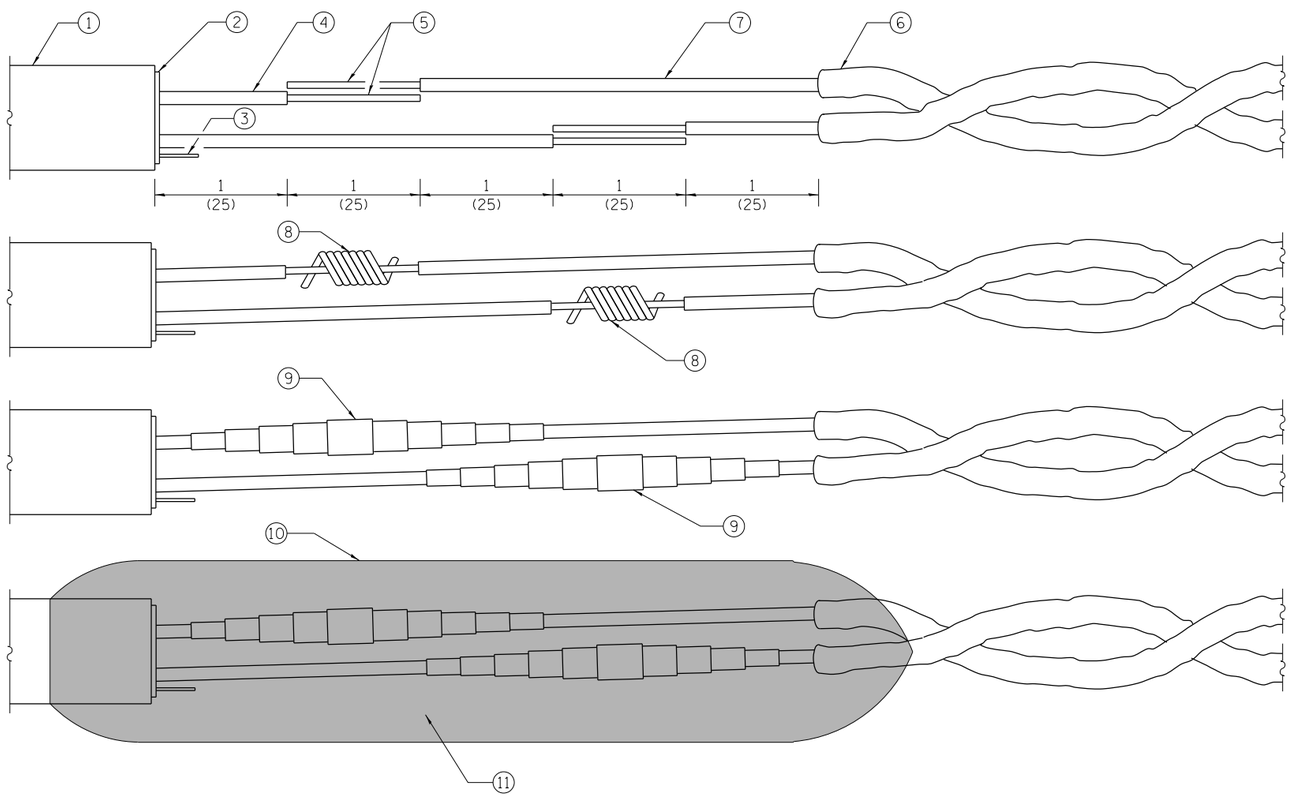


## LOOP WIRE AND LEAD–IN CABLE SPLICE

① = Lead-in cable (single pair or multipair)
② = Lead-in cable shield
③ = Lead-in cable shield drain-wire
④ = Lead-in cable insulated conductor
⑤ = Bare conductor
⑥ = Loop wire in tube
⑦ = Loop wire insulated conductor
⑧ = Twisted and resin soldered conductor
⑨ = Electrical tape insulated spice
⑩ = Rigid mold
⑪ = Waterproof and dielectric resin

All dimensions are in inches (millimeters) unless otherwise shown.

Illinois Department of Transportation

APPROVED January 1, 2009
ENGINEER OF OPERATIONS
APPROVED January 1, 2009
ENGINEER OF DESIGN AND ENVIRONMENT

ISSUED 1-1-02

| DATE | REVISIONS |
|---|---|
| 1-1-09 | Switched units to |
| | English (metric) |
| | |
| 1-1-02 | Renum. Standard 846001. |
| | |
| | |

# DETECTOR LOOP INSTALLATIONS

STANDARD 886001–01

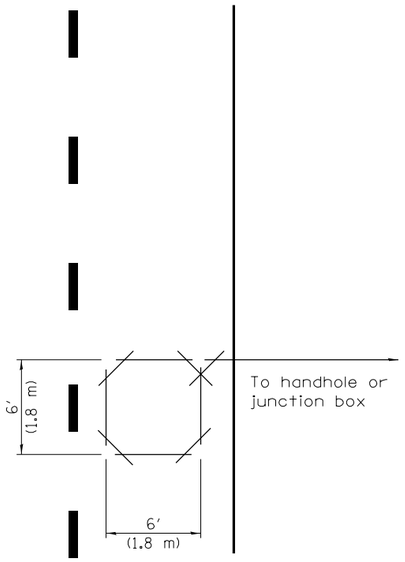


FOR POINT DETECTION
SHORT LOOP

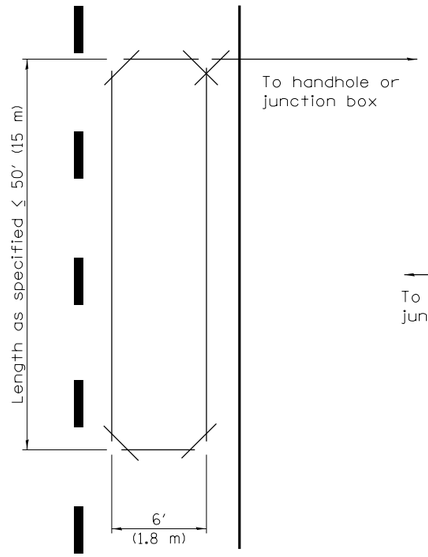


FOR PRESENCE DETECTION
LONG LOOP

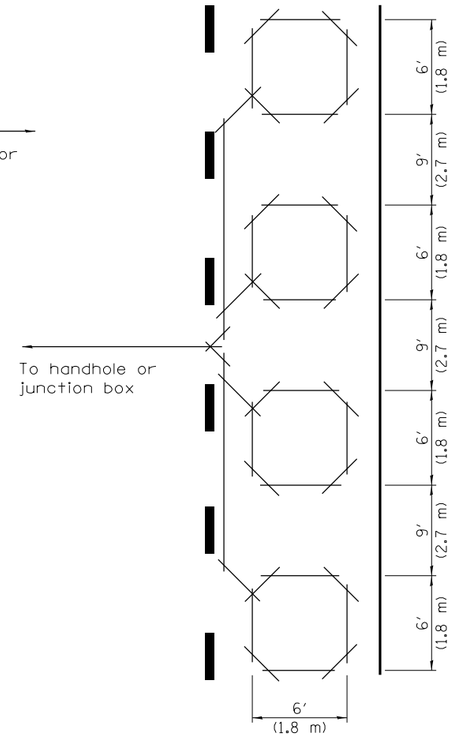


FOR PRESENCE DETECTION
MULTIPLE LOOP IN SERIES

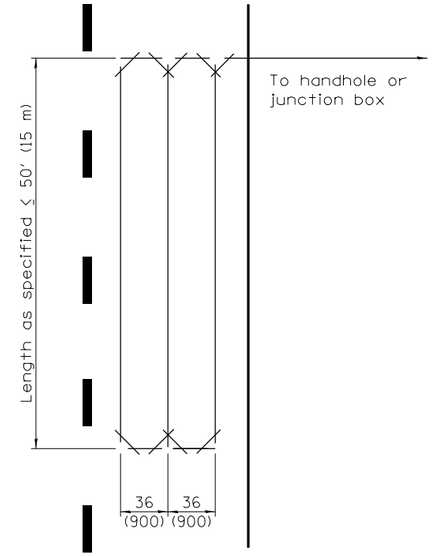


FOR PRESENCE DETECTION
QUADRUPOLE LOOP

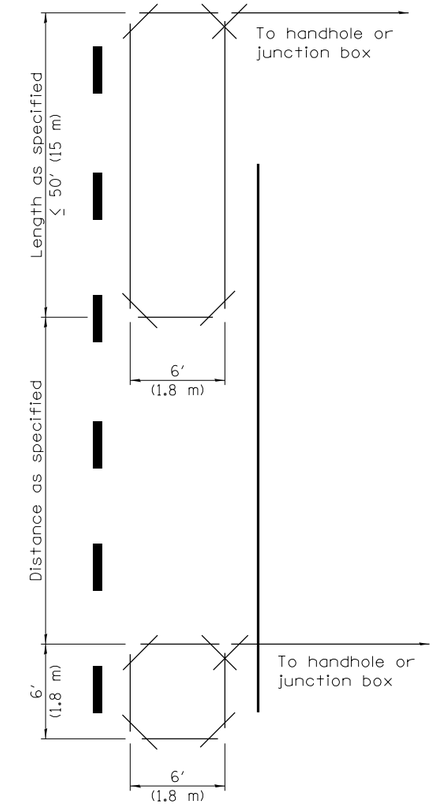


FOR EXTENDED-CALL DETECTION

## SLOT PLAN

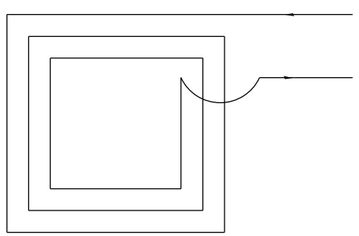

SHORT LOOP

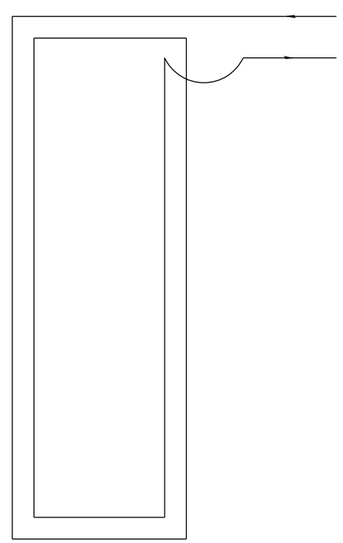

LONG LOOP

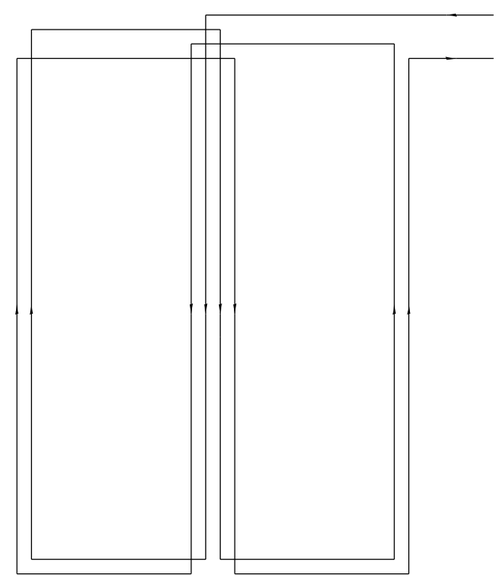

QUADRUPOLE LOOP

## WIRING DIAGRAM

All dimensions are in inches (millimeters)
unless otherwise shown.

Illinois Department of Transportation

APPROVED January 1, 2009
ENGINEER OF OPERATIONS

APPROVED January 1, 2009
ENGINEER OF DESIGN AND ENVIRONMENT

ISSUED 1-1-02

| DATE | REVISIONS |
|---|---|
| 1-1-09 | Switched units to |
| | English (metric) |
| | |
| 1-1-02 | Renum. Standard 846006. |
| | |
| | |

# TYPICAL LAYOUTS FOR DETECTION LOOPS

STANDARD 886006–01

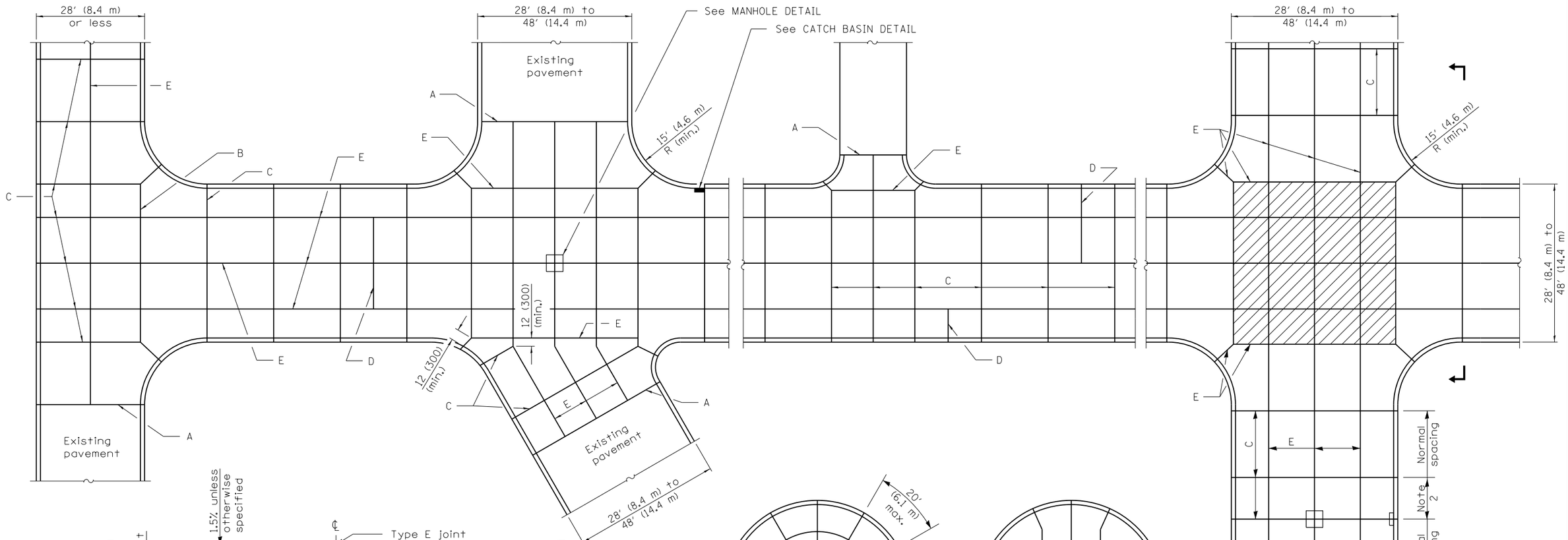


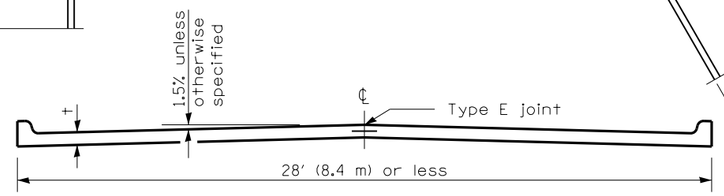


**SECTION – 28′ (8.4 m) OR LESS**

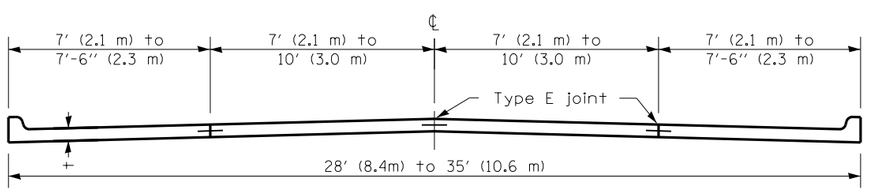


**SECTION – 28′ (8.4 m) TO 35′ (10.6 m) WIDTH**

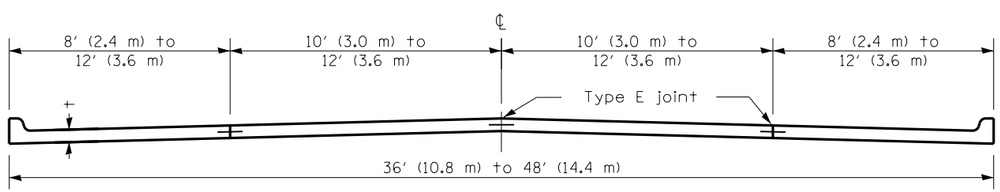


**SECTION – 36′ (10.8 m) TO 48′ (14.4 m) WIDTH**

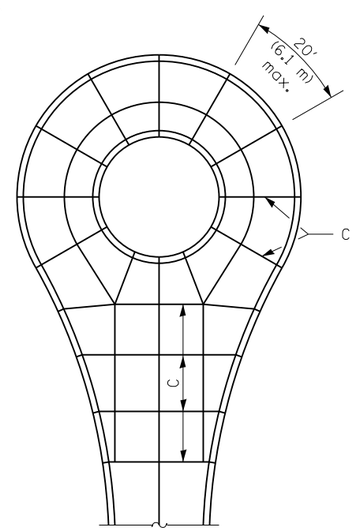


**CUL DE SAC OPEN CENTER**

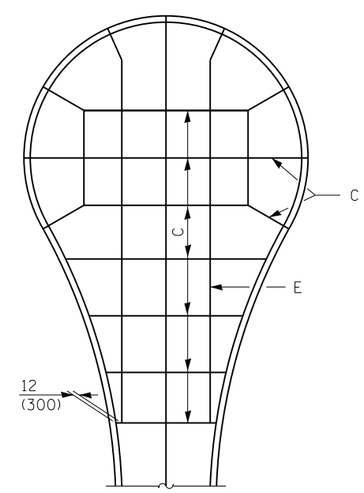


**CUL DE SAC FULLY PAVED**

† = See typical cross section on plans for thickness

All dimensions are in inches (millimeters) unless otherwise shown.

Illinois Department of Transportation

APPROVED January 1, 2009
ENGINEER OF LOCAL ROADS AND STREETS

APPROVED January 1, 2009
ENGINEER OF DESIGN AND ENVIRONMENT

ISSUED 1-1-97

| DATE | REVISIONS |
|---|---|
| 1-1-09 | Switched units to English (metric). |
| 8-1-05 | Corrected manhole and catch basin notes on Sheet 1. |

# PCC PAVEMENT SPECIAL (NONREINFORCED)

(Sheet 1 of 2)

**STANDARD B.L.R. 10–6**

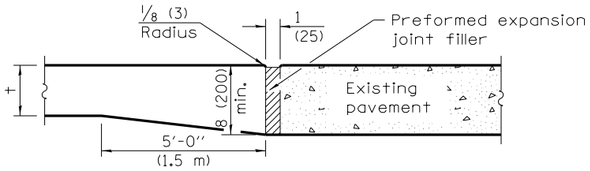


**TYPE A**
**EXPANSION JOINT**

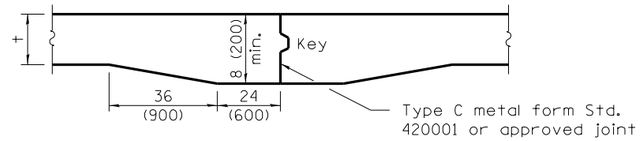


**TYPE B**
**KEYED JOINT**

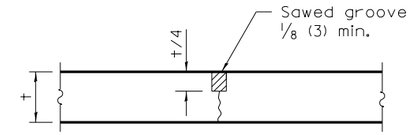


**TYPE C**
**SAWED TRANSVERSE JOINT**

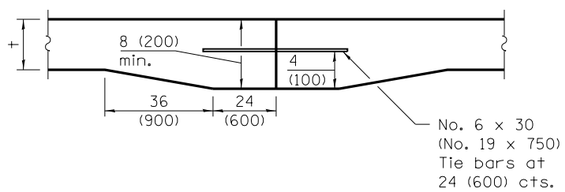


**TYPE D**
**TIED TRANSVERSE CONSTRUCTION JOINT**

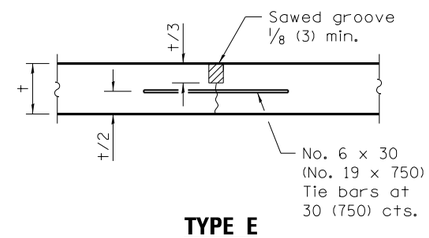


**TYPE E**
**SAWED LONGITUDINAL JOINT**

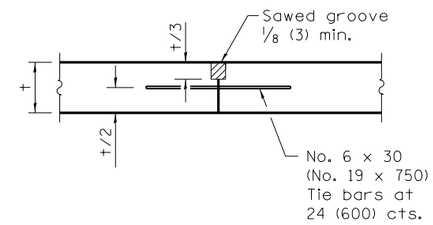


**TYPE E**
**LONGITUDINAL CONSTRUCTION JOINT**

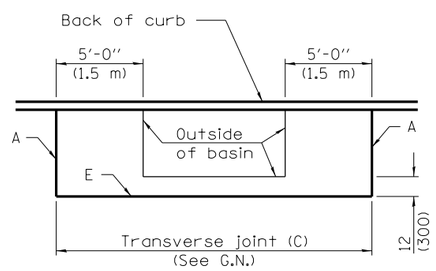


**CATCH BASIN DETAIL**

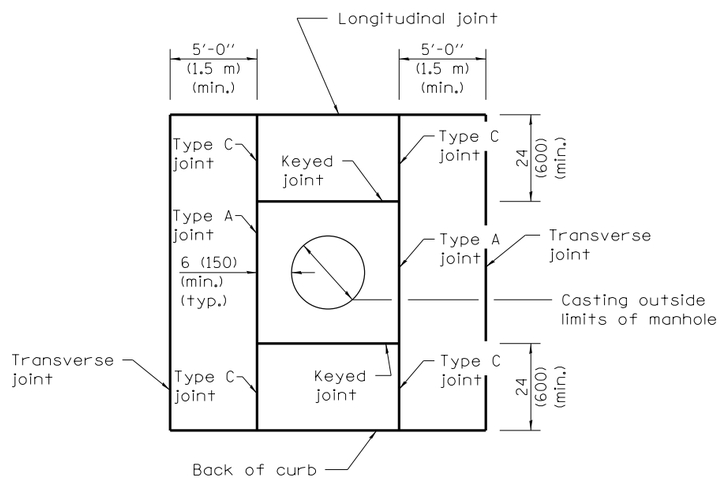


**MANHOLE DETAIL**
Showing Joint types

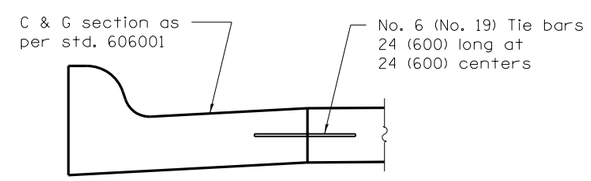


**COMB. CURB & GUTTER DETAIL**
Alt. const. see G.N.

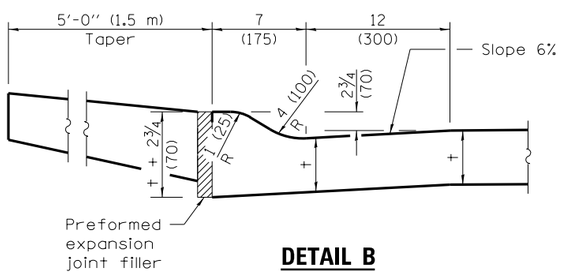


**DETAIL B**

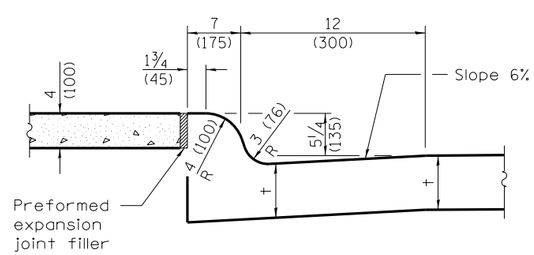


**DETAIL A**

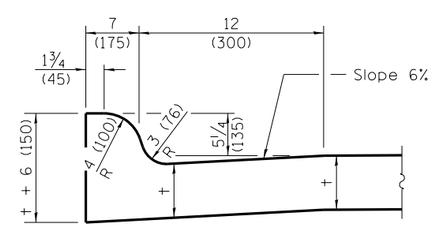


**INTEGRAL CURB**
See DETAIL A for crosswalks
and DETAIL B for driveways.

## GENERAL NOTES

All catch basins shall be separated from the pavement and curb by boxing out as shown in the detail. Manhole castings within the pavement limits shall be boxed in a like manner except when telescoping type castings are used.

When a joint falls within 5 ft. (1.5 m) of or contacts basins, manholes, or other structures, shorten one or more panels either side of opening to permit joint to fall at the corners of the box out.

When specified, roundouts as shown on Standard 420111 shall be used in lieu of the manhole detail shown herein.

All transverse joints must extend through curbs and be continuous across pavement, except tied transverse construction joints. Expansion joints will be required as shown on the plans.

When specified, the pavement structure thickness at intersections shall be increased. This requirement generally will occur when the design traffic through the intersection exceeds the typical design of the pavement structure either side of the intersection.

Joints shall be sawed to a depth of t/4 for transverse joints and t/3 for longitudinal joints. Saw joints shall be sealed with material meeting the requirements of Section 1050 of the Standard Specifications.

This alternate construction is at the Contractor's option and shall be constructed in accordance with Section 606 of the Standard Specifications. The combination concrete curb and gutter shall be measured in place and the area computed in sq. yards (sq. meters). This work will be paid for at the contract unit price per sq. yards (sq. meters) for portland cement concrete pavement special with integral curb of the thickness specified and shall include all materials and labor.

Transverse joint spacing shall not exceed 15 ft. (4.6 m).

Construct TYPE D tied transverse construction joint when construction joint does not fall at a TYPE C sawed transverse joint.

Illinois Department of Transportation

APPROVED January 1, 2009
ENGINEER OF LOCAL ROADS AND STREETS

APPROVED January 1, 2009
ENGINEER OF DESIGN AND ENVIRONMENT

ISSUED 1-1-97

# PCC PAVEMENT SPECIAL (NONREINFORCED)

(Sheet 2 of 2)

**STANDARD B.L.R. 10–6**

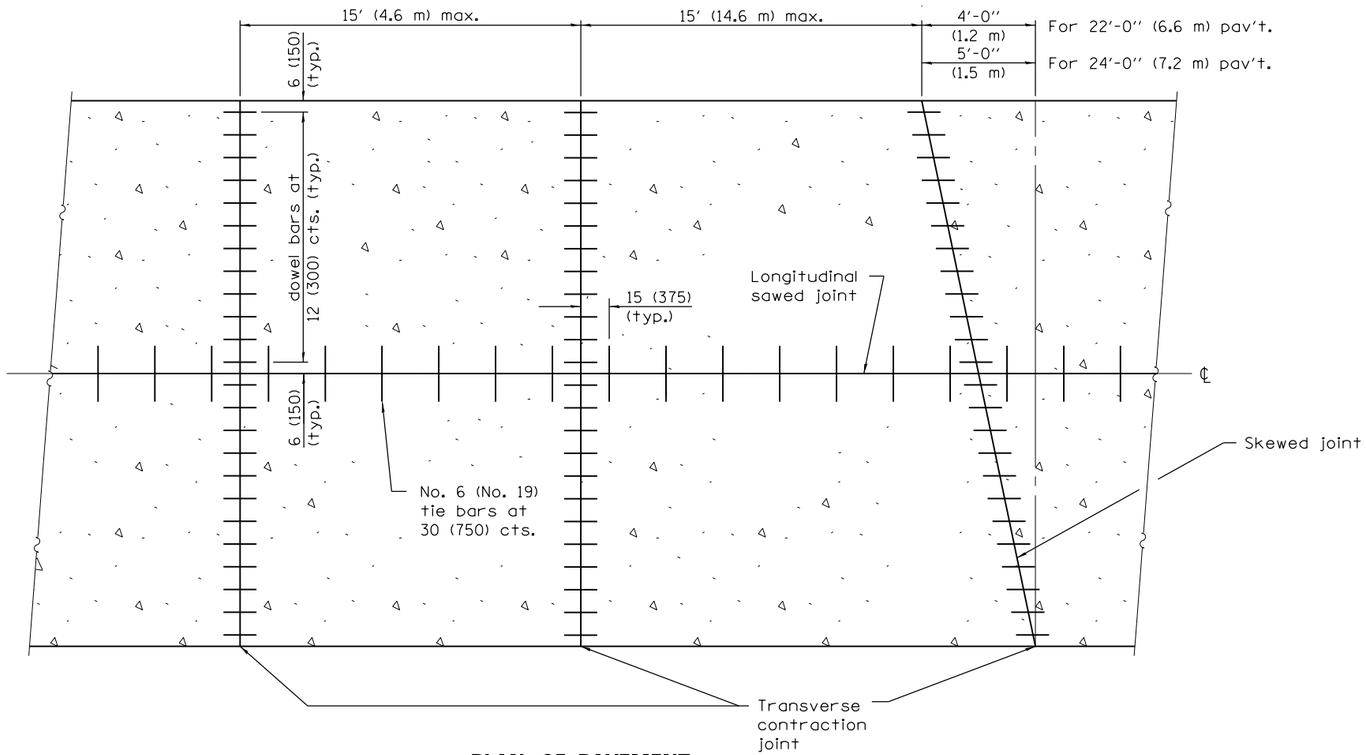


## PLAN OF PAVEMENT

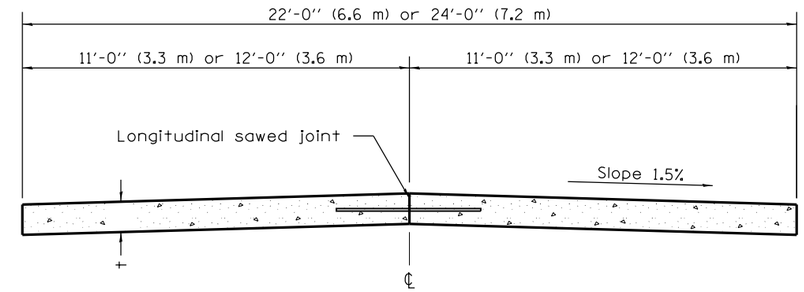


## CROSS SECTION OF PAVEMENT

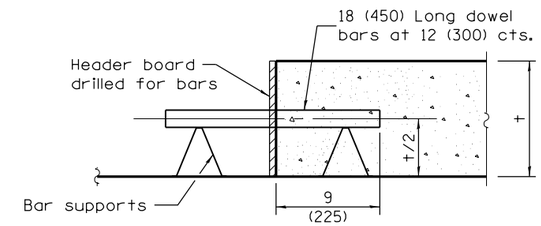


## TRANSVERSE CONSTRUCTION JOINT

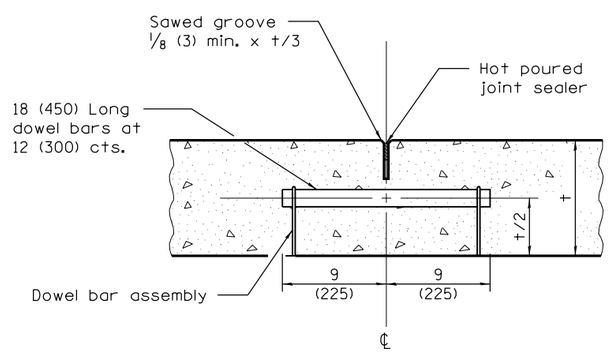


## TRANSVERSE CONTRACTION JOINT

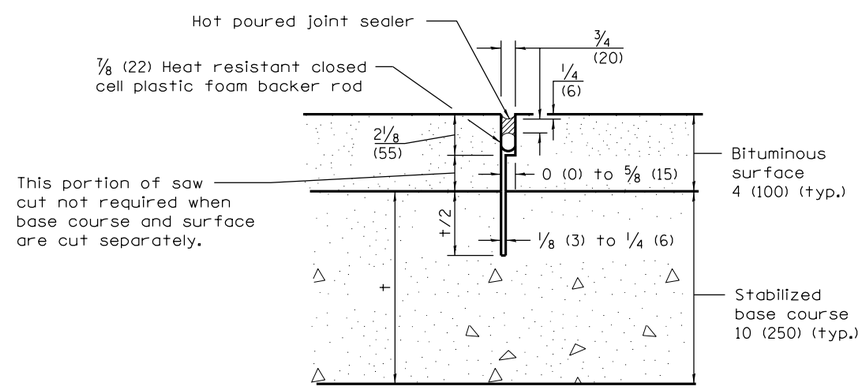


## TRANSVERSE CONTRACTION JOINT

(For CAM, CFA and LFA Base Course Mixtures)

## GENERAL NOTES

See Standard 420001 for details of Transverse Expansion Joints, Longitudinal Sawed Joints and Longitudinal Construction Joints.

Skewed joints shall be used when specified by Special Provisions.

Dowel bars are only required for pavements having a design traffic factor of 3.0 or greater.

t = Pavement thickness (See Typical Cross Section)

All dimensions are in inches (millimeters) unless otherwise shown.

## DOWEL BAR TABLE

| PAVEMENT THICKNESS | DOWEL BAR DIAMETER |
|---|---|
| 8 (200) or greater | 1 1/2 (38) |
| 7 (175) thru 7.99 (199) | 1 1/4 (32) |
| Less than 7 (175) | 1 (25) |

Illinois Department of Transportation

APPROVED January 1, 2015
ENGINEER OF LOCAL ROADS AND STREETS

APPROVED January 1, 2015
ENGINEER OF DESIGN AND ENVIRONMENT

ISSUED 1-1-97

| DATE | REVISIONS |
|---|---|
| 1-1-15 | Added general note |
| | regarding dowel bars. |
| | |
| 1-1-09 | Switched units to |
| | English (metric). |
| | |

# PORTLAND CEMENT CONCRETE PAVEMENT (NONREINFORCED)

STANDARD B.L.R. 14–11

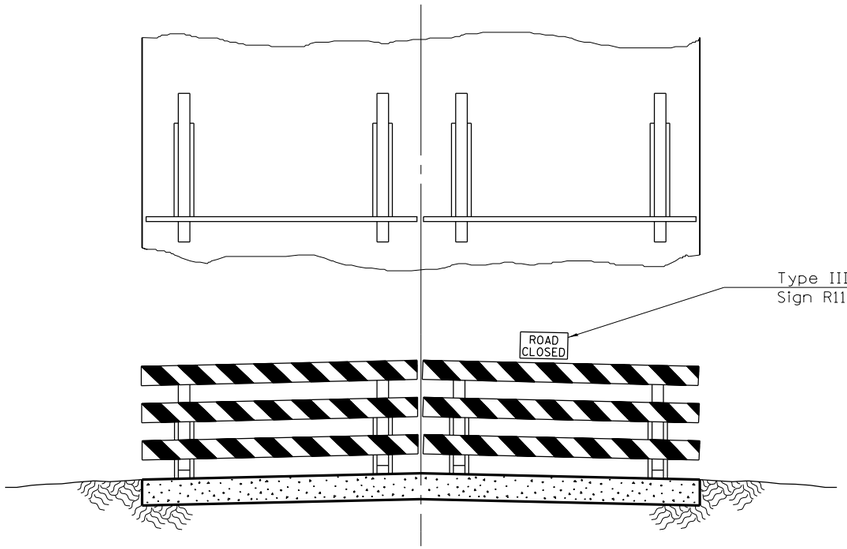


Resident traffic and day labor force's equipment to use road shoulder for passing barricade.

Type III Barricades with Standard Sign R11-2 or R11-4 mounted as shown.

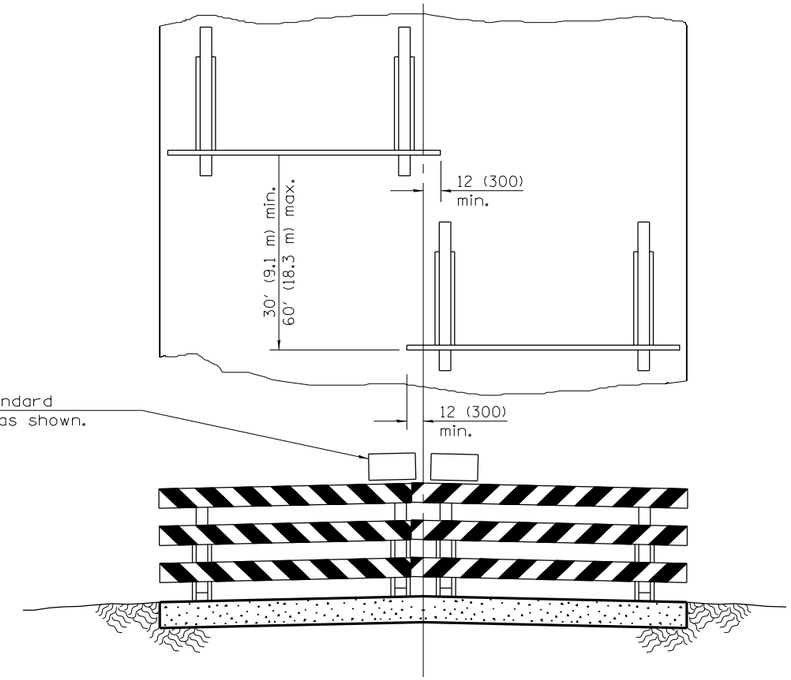


Use when shoulders are too narrow for passage of traffic.

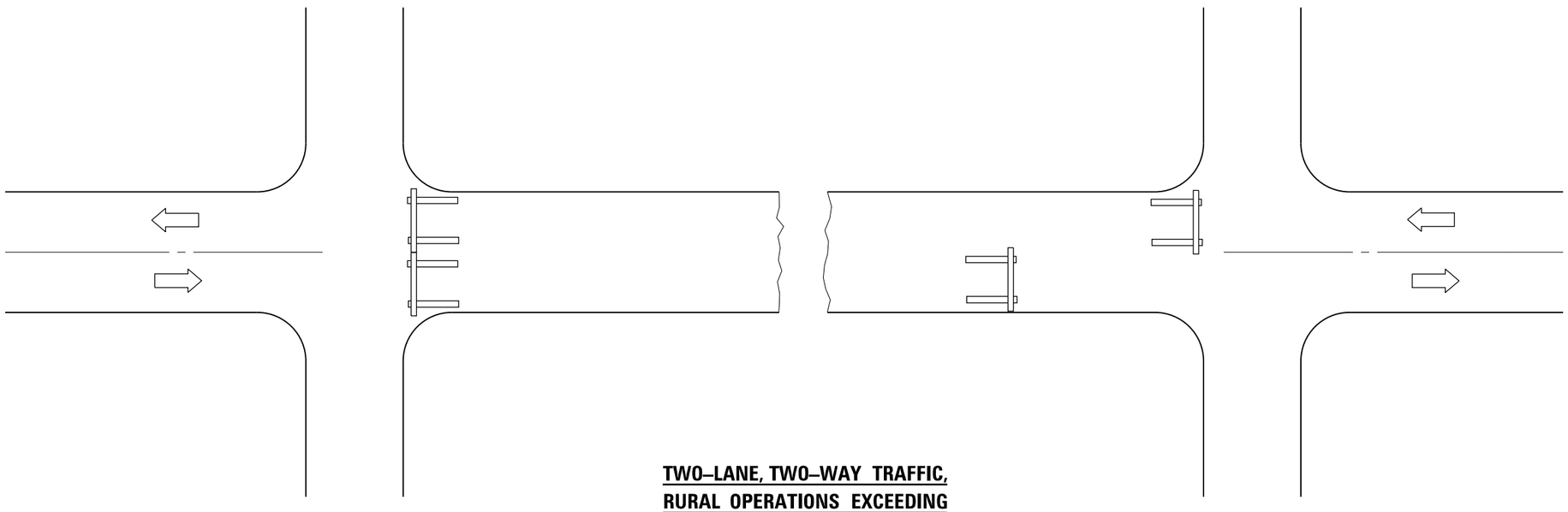

**TWO–LANE, TWO–WAY TRAFFIC, RURAL OPERATIONS EXCEEDING ONE DAYLIGHT PERIOD**

## GENERAL NOTES

Type III barricades to be width of pavement only.

Reflectorized striping shall appear on both sides of barricades. Barricades shall be positioned so that stripes slope downward toward the side on which traffic is to pass.

Although not shown, advance warning signs with minimum dimensions of 36x36 (900x900) and black legends on orange reflectorized backgrounds shall be utilized where needed.

This case is for use on rural local roads where the local authority considers this protection to be appropriate for the specific job conditions.

All dimensions are in inches (millimeters) unless otherwise shown.

Illinois Department of Transportation

APPROVED January 1, 2009
Charles P. Ingersoll
ENGINEER OF LOCAL ROADS AND STREETS

APPROVED January 1, 2009
Eric E. Harm
ENGINEER OF DESIGN AND ENVIRONMENT

ISSUED 1-1-97

| DATE | REVISIONS |
|---|---|
| 1-1-09 | Switched units to |
| | English (metric). |
| | |
| 1-1-98 | Rev. "R11-1" to "R11-4". |
| | Rev. 4th General Note. |
| | |

# TRAFFIC CONTROL DEVICES – DAY LABOR CONSTRUCTION

**STANDARD B.L.R. 17–4**

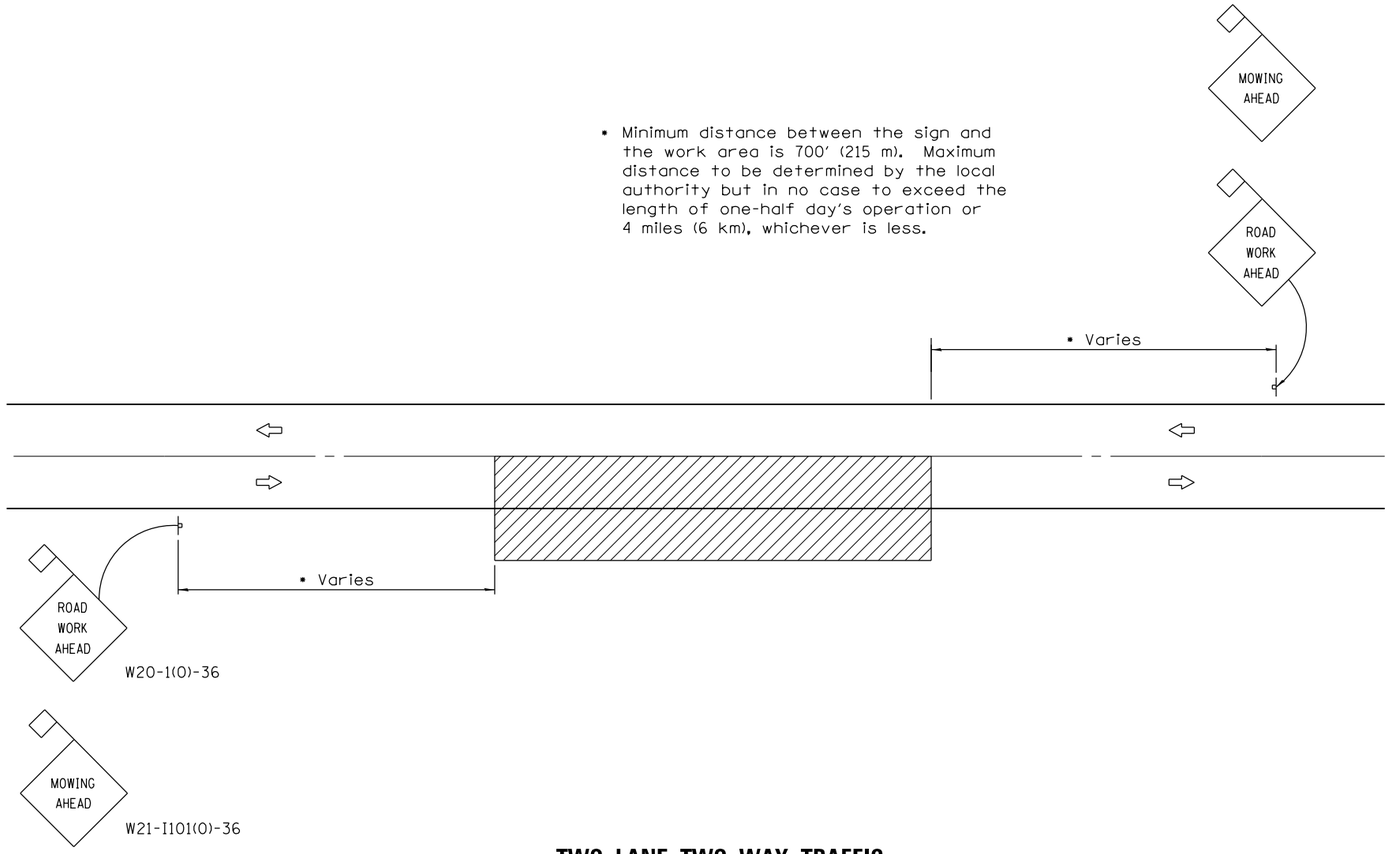


## TWO–LANE, TWO–WAY TRAFFIC
## RURAL OPERATIONS
## DAY OPERATIONS ONLY

### SYMBOLS

Work area

Sign with 18x18 (450x450) min. orange flag attached.

### TYPICAL APPLICATIONS

MOWING
SPREADING AGGREGATE
WEED SPRAYING
SURFACE MAINTENANCE
BITUMINOUS RESURFACING
CRACK POURING
SHOULDER REPAIR
CLEANING DITCHES

### GENERAL NOTES

Maintenance operations shall be confined to one traffic lane, leaving the opposite lane open to traffic. At least 500′ (150 m) of both traffic lanes shall be available for traffic movement between work areas at intervals not greater than 1000′ (300 m).

When operations are on the pavement and stationary or moving at a speed less than 4 mph (6 kph), a ONE LANE AHEAD, or other appropriate sign, shall be installed in each direction between the ROAD WORK AHEAD sign and the work area. The distance between this sign and the work area shall be a minimum of 400′ (120 m) but in no case to exceed the length of one-half day's operation or 4 miles (6 km), whichever is less. The distance between the two signs shall be approximately 400′ (120 m).

All signs are to be removed at completion of the day's operation.

Any unattended obstacle, excavation, or pavement drop off greater than 3 (75) in the work area shall be protected by Type I or Type II barricades with flashing lights.

Longitudinal dimensions may be adjusted slightly to fit field conditions.

All vehicles, equipment, men, and their acitvities are restricted at all times to one side of the pavment.

Flashing lights or rotating beacons are required for all maintenance vehicles while in operation.

Applicable operations illustrated in Standard 701301 may be used when operations do not exceed 15 minutes on the pavement or 60 minutes on the shoulder respectively.

All warning signs shall have minimum dimensions of 36x36 (900x900) and have black legend on an orange reflectorized background.

When fluorescent signs are used, orange flags are not required.

This case is for use on rural local roads where the local authority considers this protection to be appropriate for the specific job conditions.

All dimensions are in inches (millimeters) unless otherwise shown.

Illinois Department of Transportation

APPROVED January 1, 2015
James K Keen
ENGINEER OF LOCAL ROADS AND STREETS
APPROVED January 1, 2015
ENGINEER OF DESIGN AND ENVIRONMENT

ISSUED 1-1-97

| DATE | REVISIONS |
|---|---|
| 1-1-15 | Corrected RWA sign number. |
| | |
| | |
| 1-1-09 | Switched units to |
| | English (metric). Moved |
| | one General Note. |

# TRAFFIC CONTROL DEVICES– DAY LABOR MAINTENANCE

## STANDARD B.L.R. 18–6

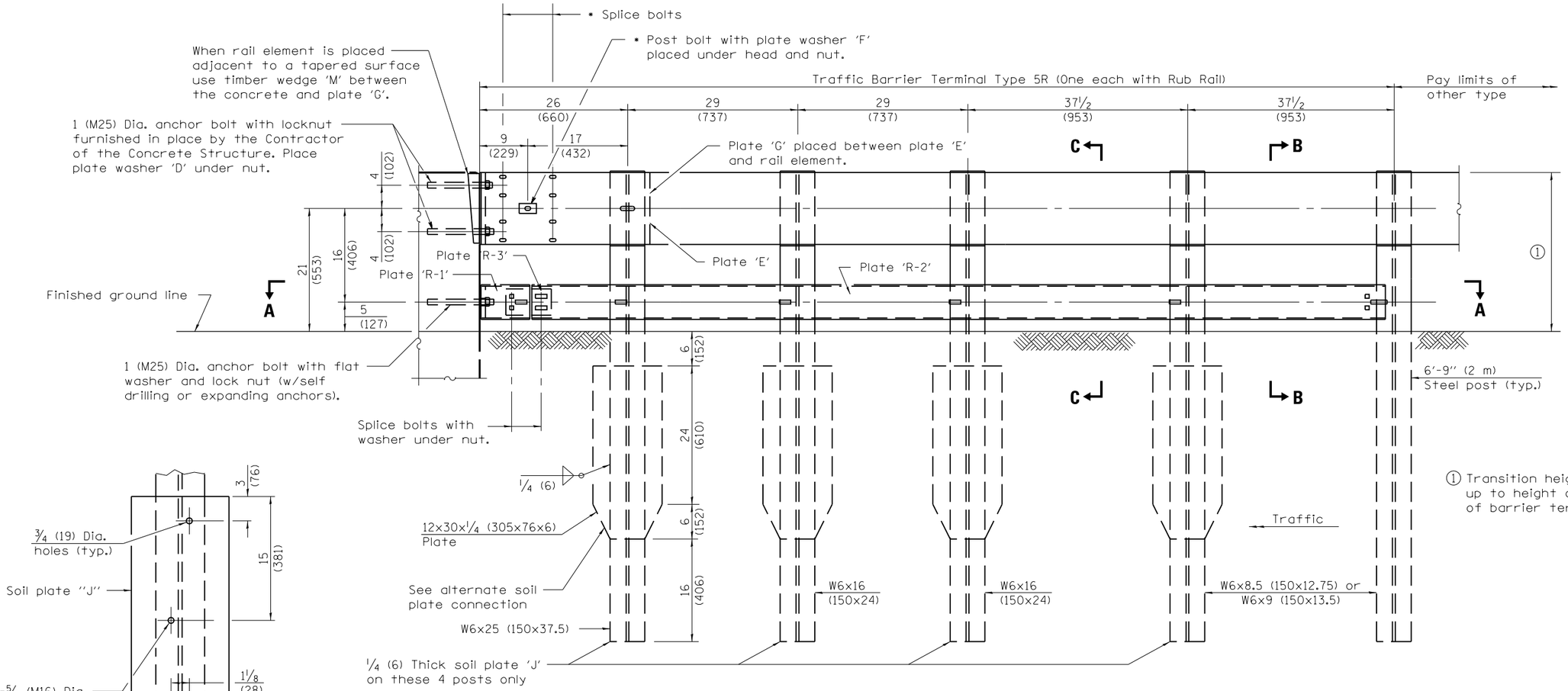


① Transition height of barrier terminal up to height of guardrail over length of barrier terminal.

## ELEVATION–TRAFFIC BARRIER TERMINAL TYPE 5R

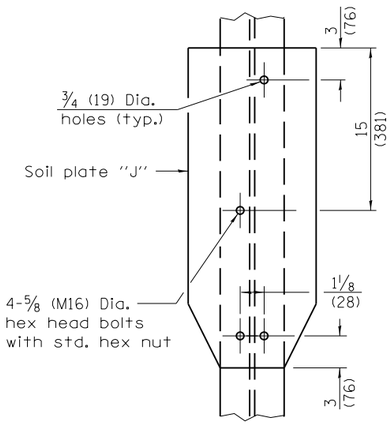


## ALTERNATE SOIL PLATE CONNECTION

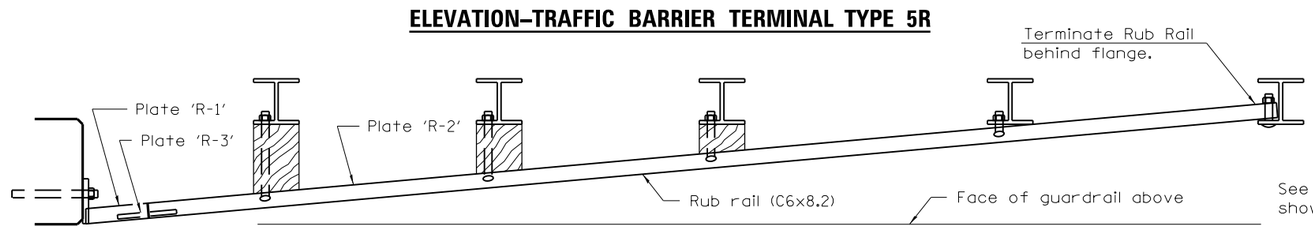


## SECTION A–A

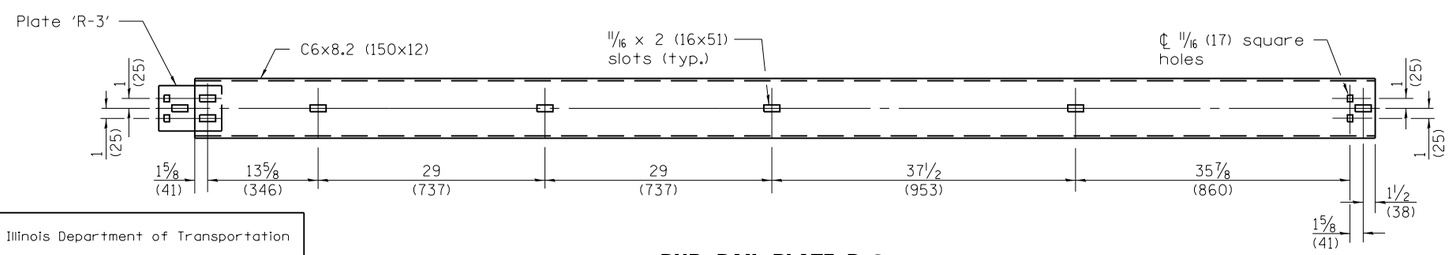


## RUB RAIL PLATE R–2

## GENERAL NOTES

See Standard B.L.R. 26 for details of guardrail not shown.

Install the face of the guardrail flush with the face of the parapet. Install plate washer "D" so that the 1 (25) projection fills the remainder of the slotted holes in the 1 (25) end plate on plate "G" afterthe 1 (25) bolts are in place.

* When an expantion joint exists below the connector, bolts shall be provided with locknut or double nut and shall be tightened only to a point that will allow plate G to be free to move.

All dimensions are in inches (millimeters) unless otherwise shown.

Illinois Department of Transportation

APPROVED January 1, 2012
ENGINEER OF LOCAL ROADS AND STREETS

APPROVED January 1, 2012
ENGINEER OF DESIGN AND ENVIRONMENT

ISSUED 1-1-97

| DATE | REVISIONS |
|---|---|
| 1-1-12 | Revised barrier terminal |
| | height per note ① . |
| | |
| 1-1-09 | Switched units to |
| | English (metric). |
| | |

# TRAFFIC BARRIER TERMINAL–TYPE 5R

(Sheet 1 of 2)

STANDARD B.L.R. 20–7

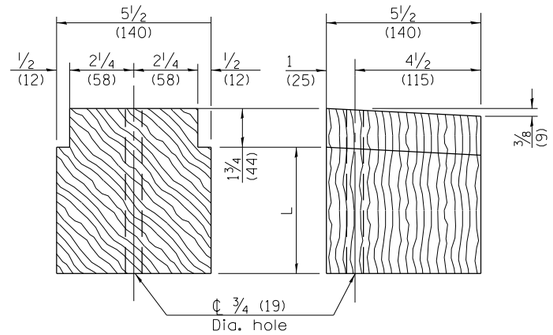


| ** L |
|---|
| 7⅜ (187) |
| 5⅝ (143) |
| 3⅞ (98) |

## TREATED TIMBER BLOCKING

** Approximate Lengths Field Verify

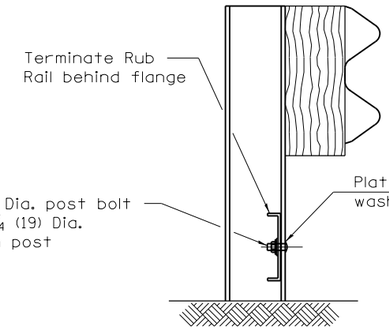


## SECTION B–B

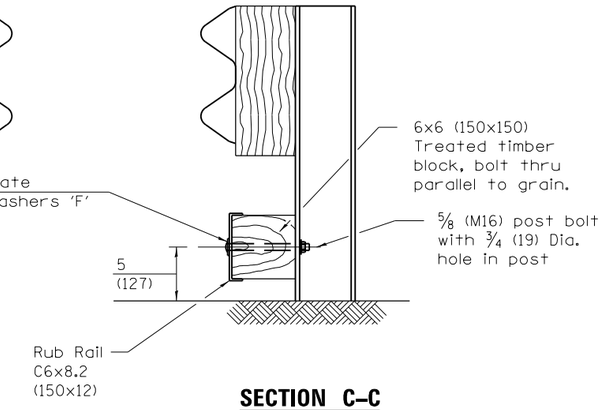


## SECTION C–C

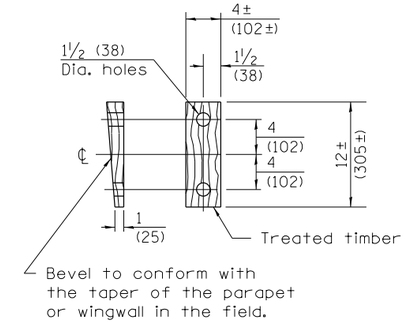


## WEDGE M

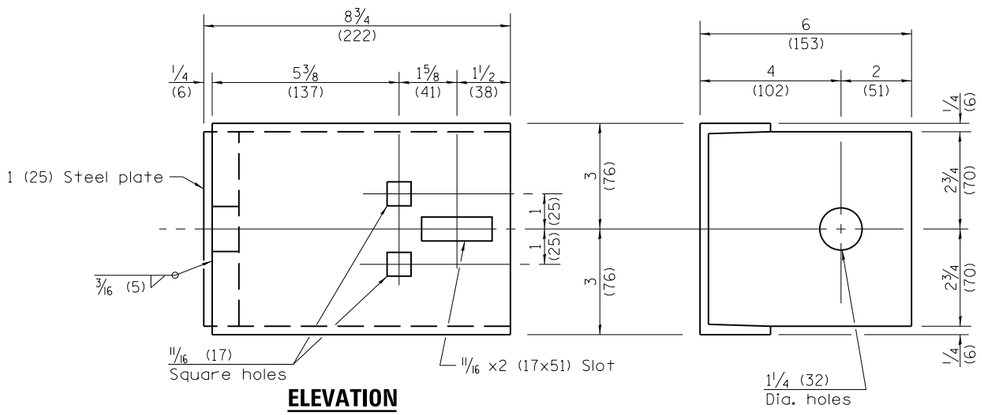


## ELEVATION

## END VIEW

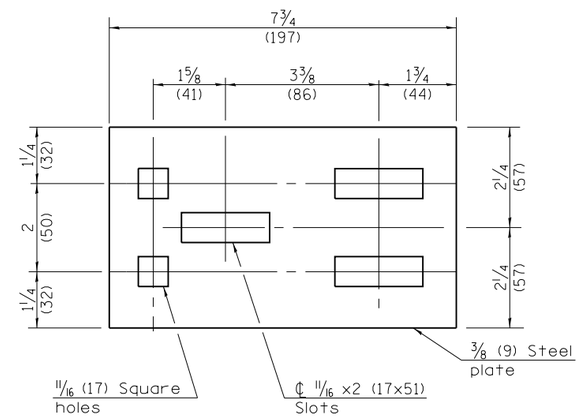


## SPLICE PLATE 'R–3'

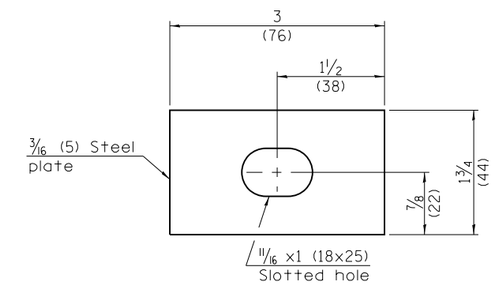


## PLATE WASHER F

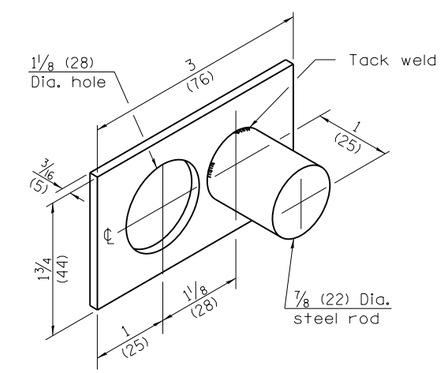


## PLATE WASHER D

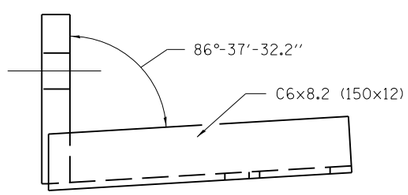


## PLAN

## RUB RAIL PLATE R–1

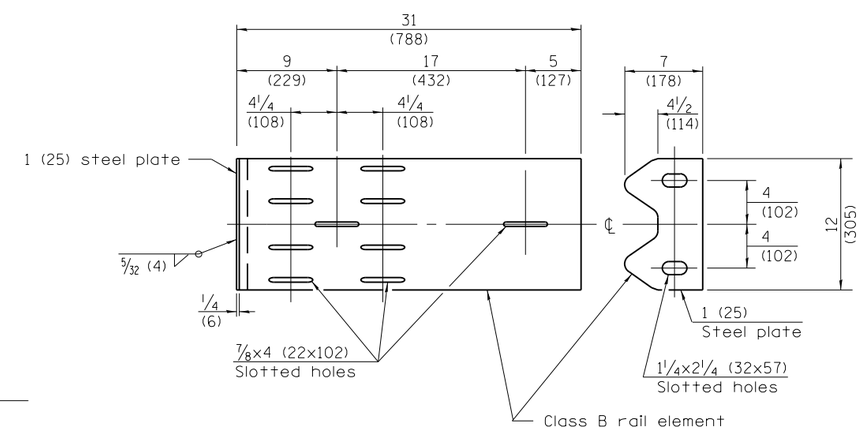


## PLATE G

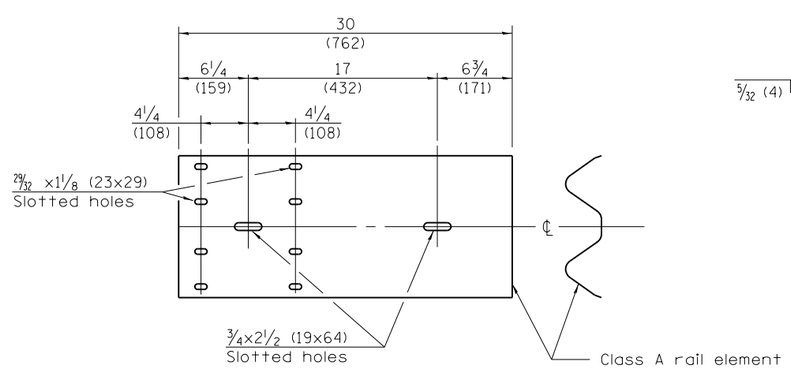


## PLATE E

Illinois Department of Transportation

APPROVED January 1, 2012
ENGINEER OF LOCAL ROADS AND STREETS

APPROVED January 1, 2012
ENGINEER OF DESIGN AND ENVIRONMENT

ISSUED 1-1-97

# TRAFFIC BARRIER TERMINAL–TYPE 5R

(Sheet 2 of 2)

**STANDARD B.L.R. 20–7**

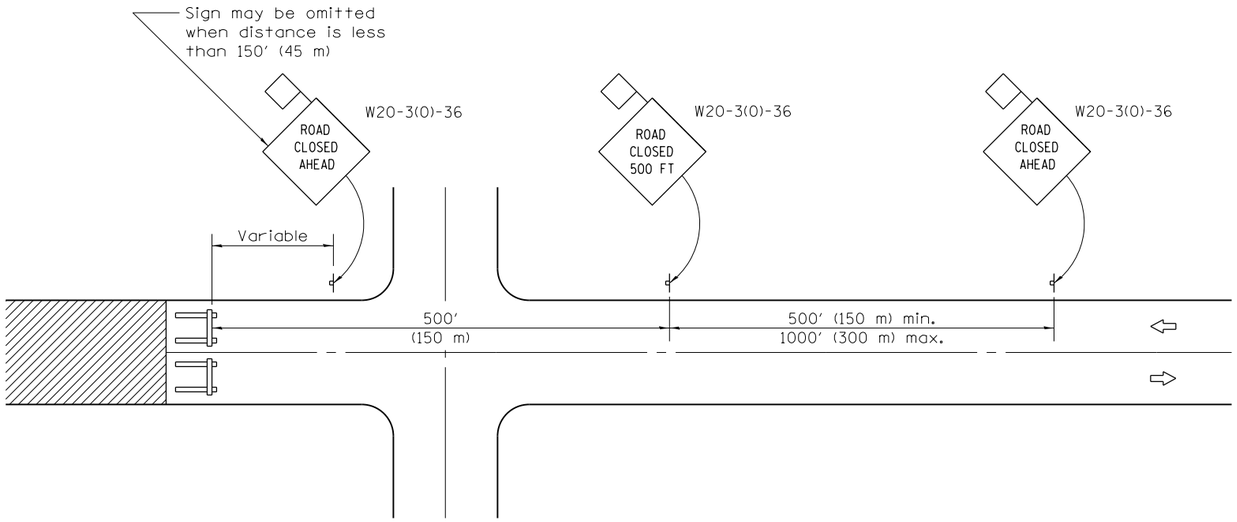


**CONDITION I**

When distance from closure to crossroad is less than 1500′ (450 m)

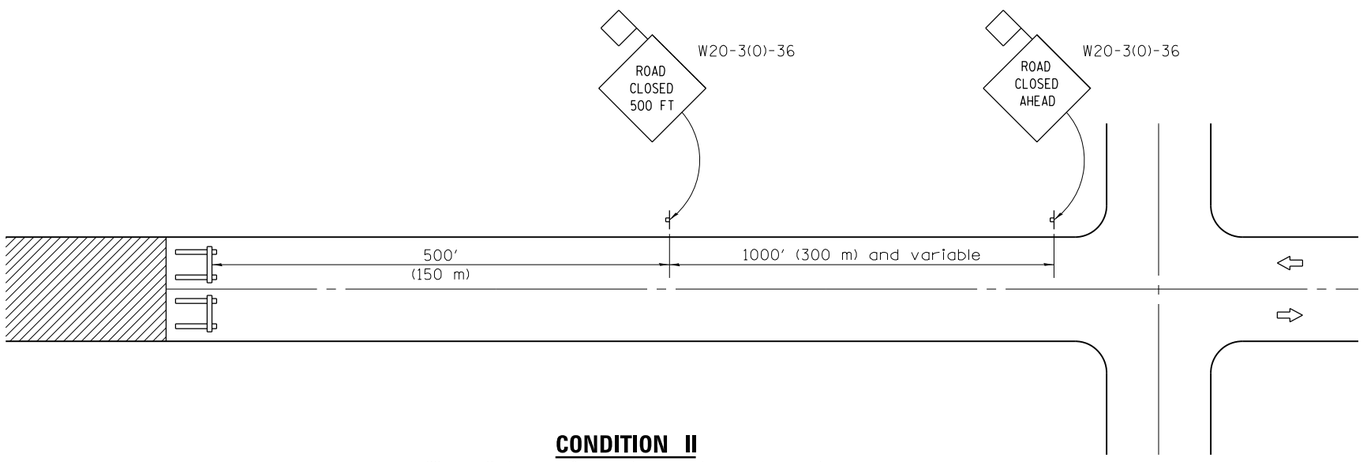


**CONDITION II**

When distance from closure to crossroad is greater than 1500′ (450 m)

## SYMBOLS

Work area

Type III Barricade

Sign with 18x18 (450x450) min. orange flag attached

## GENERAL NOTES

Type III Barricades and R11-2-4830 signs shall be positioned as shown in "Road Closed To All Traffic" detail on Highway Standard 701901.

Two Type A Low Intensity Flashing Lights shall be used on each approach in advance of the work area during hours of darkness. One light shall be installed above the barricades and the other above the first advance warning sign.

All warning signs shall have minimum dimensions of 36 x 36 (900 x 900) and have a black legend on an orange reflectorized background.

When fluorescent signs are used, orange flags are not required.

Longitudinal dimensions may be adjusted to fit field conditions.

When the distance between the barricade and the intersection is between 1500′ (450 m) and 2000′ (600 m), the advance sign shall be placed at the intersection. When the distance between the barricade and the intersection is over 2000′ (600 m), an additional sign shall be placed at the intersection. The additional sign shall give the distance to the barricade in miles or fractions of a mile.

All dimensions are in inches (millimeters) unless otherwise shown.

Illinois Department of Transportation

APPROVED January 1, 2012
ENGINEER OF LOCAL ROADS AND STREETS

APPROVED January 1, 2012
ENGINEER OF DESIGN AND ENVIRONMENT

ISSUED 1-1-97

| DATE | REVISIONS |
|---|---|
| 1-1-12 | Omitted two notes from |
| | GENERAL NOTES. |
| | |
| 1-1-09 | Switched units to |
| | English (metric). |
| | |

**TYPICAL APPLICATION OF TRAFFIC CONTROL DEVICES FOR CONSTRUCTION ON RURAL LOCAL HIGHWAYS**

**STANDARD B.L.R. 21–9**

## CONDITION I
## APPROACH TRAFFIC STOPPED

## CONDITION II
## APPROACH TRAFFIC DOES NOT STOP

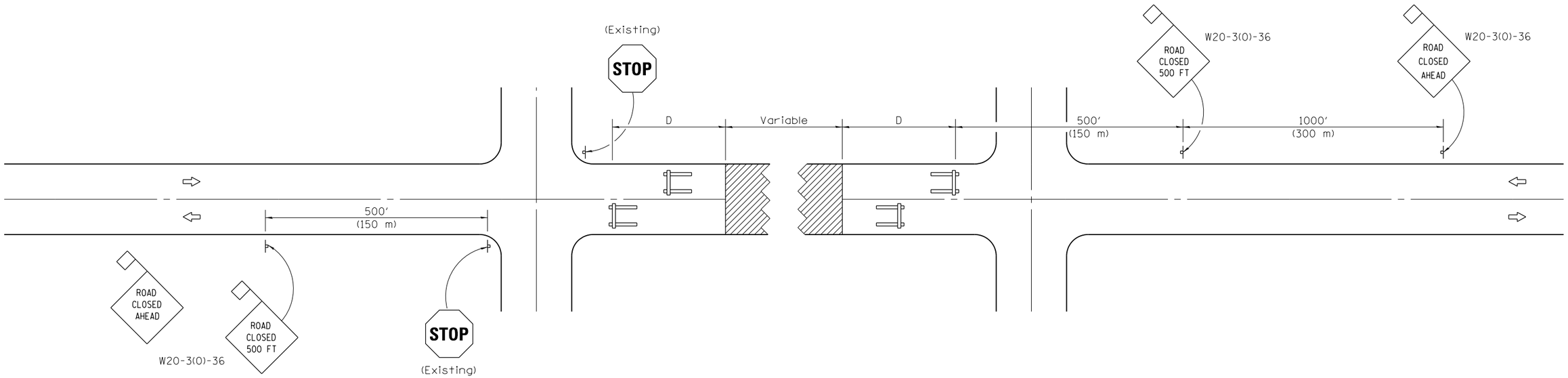


## SYMBOLS

Work area

Type III Barricade

Sign with 18x18 (450x450) min. orange flag attached

## GENERAL NOTES

Type III Barricades and R11-4-6030 signs shall be positioned as shown in the "Road Closed To All Traffic" detail on Highway Standard 701901. If the distance "D" exceeds 2000′ (600 m), an additional set of barricades and R11-4-6030 shall be placed at each end of the work area.

Two Type A Low Intensity Flashing Lights shall be used on each approach in advance of the work area. One light shall be installed above each barricade. If only one barricade is required, the other light shall be installed above the first advance warning sign.

All warning signs shall have minimum dimensions of 36 x 36 (900 x 900) and have a black legend on an orange reflectorized background.

When fluorescent signs are used, orange flags are not required.

Longitudinal dimensions may be adjusted to fit field conditions.

All dimensions are in inches (millimeters) unless otherwise shown.

Illinois Department of Transportation

APPROVED January 1, 2012
ENGINEER OF LOCAL ROADS AND STREETS

APPROVED January 1, 2012
ENGINEER OF DESIGN AND ENVIRONMENT

ISSUED 1-1-97

| DATE | REVISIONS |
|---|---|
| 1-1-12 | Omitted two notes from |
| | GENERAL NOTES. |
| | |
| 1-1-09 | Revised General Notes |
| | and switched units to |
| | English (metric). |

**TYPICAL APPLICATION OF TRAFFIC CONTROL DEVICES FOR CONSTRUCTION ON RURAL LOCAL HIGHWAYS**
(TWO-LANE TWO WAY RURAL TRAFFIC)
(ROAD CLOSED TO THRU TRAFFIC)

**STANDARD B.L.R. 22–7**

| OFFSETS TO FACE OF RAIL | | |
|---|---|---|
| Post | X ft (m) | Y ft (m) |
| 1 | 37.22 (11.345) | 4.0 (1.22) |
| 2 | 31.09 (9.475) | 2.79 (0.850) |
| 3 | 24.92 (7.595) | 1.79 (0.545) |
| 4 | 20.79 (6.335) | 1.25 (0.380) |
| 5 | 16.64 (5.070) | 0.80 (0.245) |
| 6 | 12.49 (3.805) | 0.45 (0.135) |
| 7 | 6.25 (1.905) | 0.11 (0.035) |
| 8 | 0.00 (0.00) | 0.00 (0.00) |

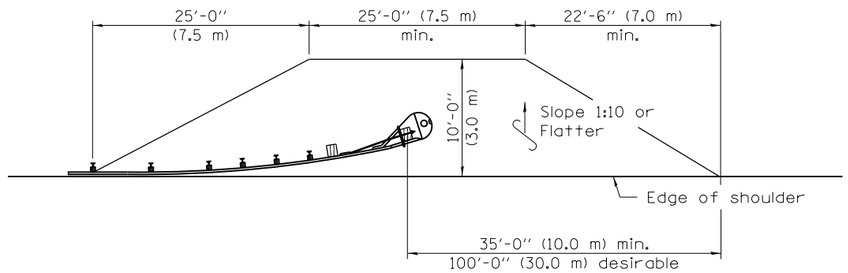


## SHOULDER WIDENING TRANSITION

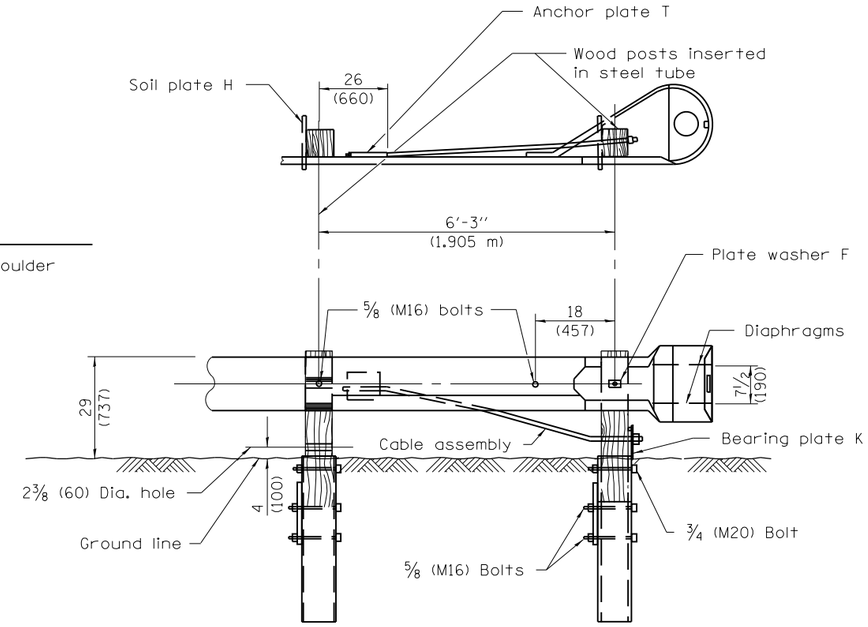


## WOOD BREAKAWAY POSTS
## TUBULAR STEEL FOUNDATIONS

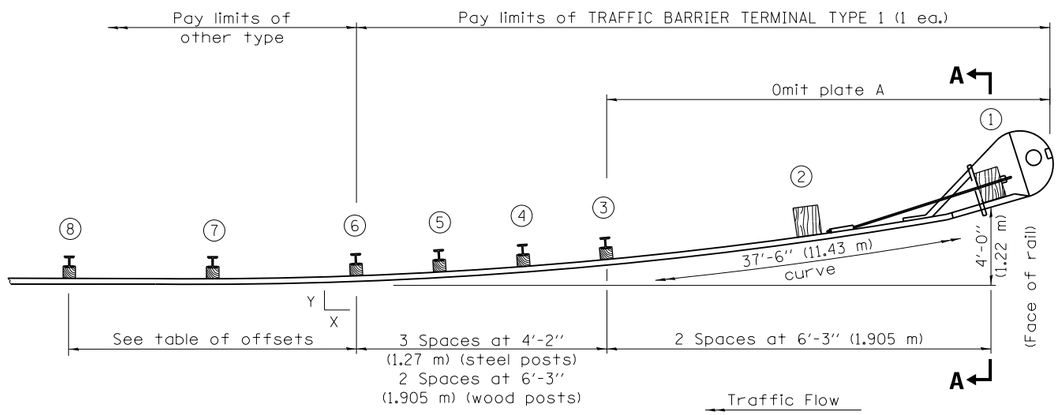


## PLAN

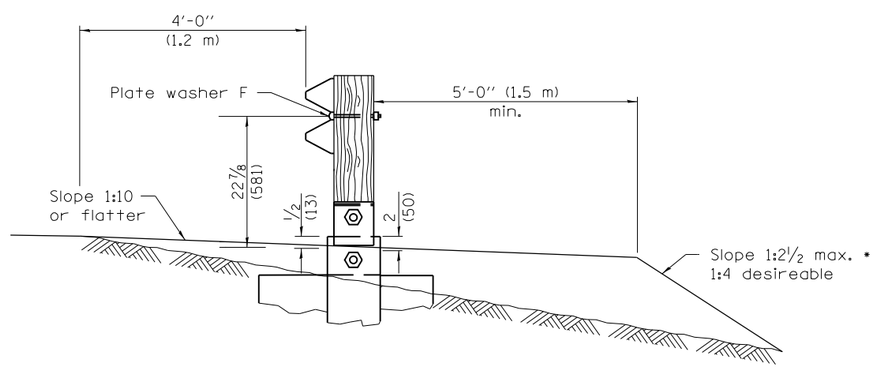


## SECTION A–A

* If fill height exceeds 5'-0" (1.5 m) use 1:3 max.

## GENERAL NOTES

See Standard B.L.R. 26 for details of guardrail not shown.

Posts at location 1 & 2 shall be wood breakaway posts. Posts other than 1 & 2 may be either standard wood posts or steel posts, at the option of the Contractor. If standard wood posts are used, one post shall be located midway between and in lieu of posts 4 & 5. The offset (Y) for this post shall be 12 (300).

A two-piece assembly may be substituted for the one piece nose shown above.

The bearing plate K shall be held in position by (2) two eightpenny nails driven into the post and bent over the top of the plate.

When this terminal is used with Standard 630001, the guardrail shall transition down to the height of the terminal prior to post 8.

All slope ratios are expressed as units of vertical displacement to units of horizontal displacement (V:H).

All dimensions are in inches (millimeters) unless otherwise shown.

Illinois Department of Transportation

APPROVED January 1, 2012
ENGINEER OF LOCAL ROADS AND STREETS
APPROVED January 1, 2012
ENGINEER OF DESIGN AND ENVIRONMENT

ISSUED 1-1-08

| DATE | REVISIONS |
|---|---|
| 1-1-12 | Revised barrier terminal |
| | height and wood |
| | breakaway post. |
| 1-1-09 | Switched units to |
| | English (metric). |
| | |

# TRAFFIC BARRIER TERMINAL TYPE 1

(Sheet 1 of 2)

STANDARD B.L.R. 23–4

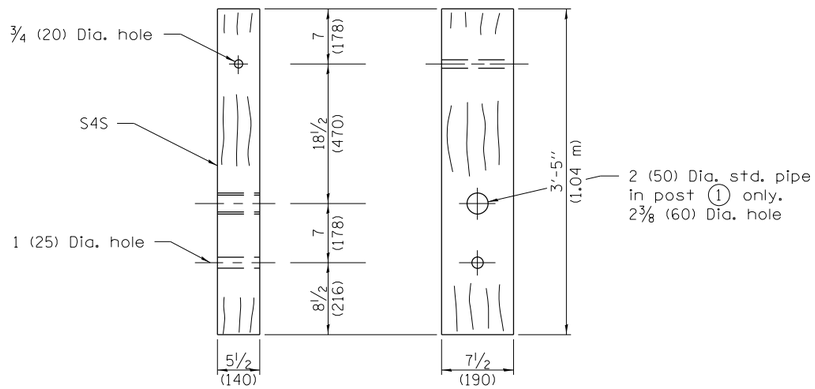


**WOOD BREAKAWAY POST**
(2 ea.)

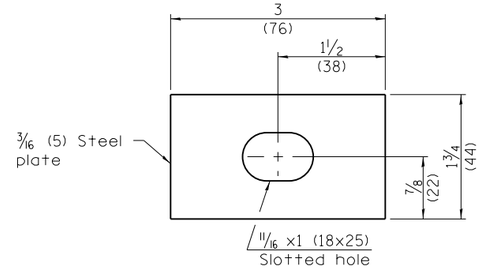


**PLATE WASHER F**
(1 ea.)

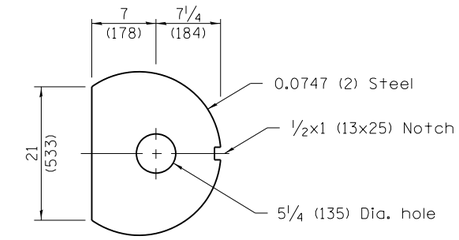


**DIAPHRAGM**
(2 ea.)

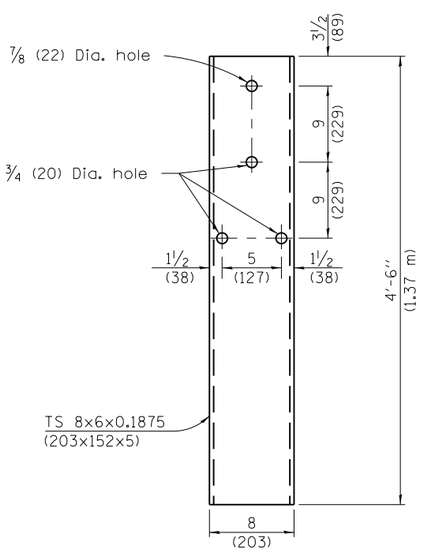


**STEEL TUBE**
(2 ea.)

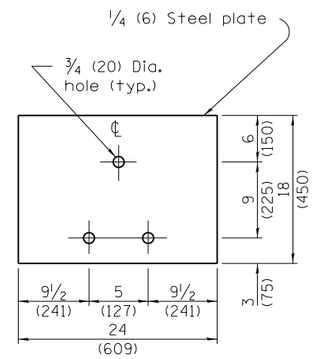


**SOIL PLATE H**
(2 ea.)

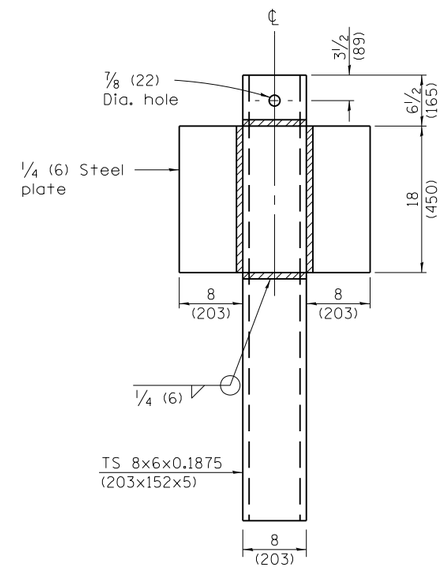


**ALTERNATE SOIL PLATE CONNECTION**

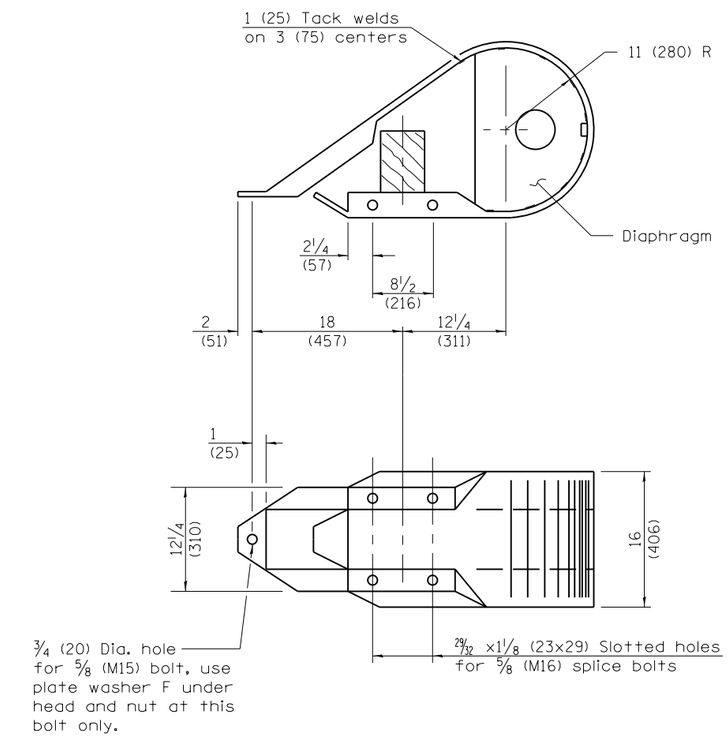


**NOSE**
(1 ea.)

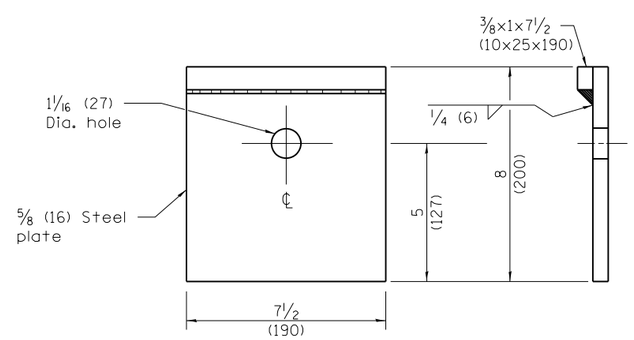


**BEARING PLATE K**
(1 ea.)

Illinois Department of Transportation

APPROVED January 1, 2012
ENGINEER OF LOCAL ROADS AND STREETS
APPROVED January 1, 2012
ENGINEER OF DESIGN AND ENVIRONMENT

ISSUED 1-1-08

# TRAFFIC BARRIER TERMINAL TYPE 1

(Sheet 2 of 2)

**STANDARD B.L.R. 23–4**

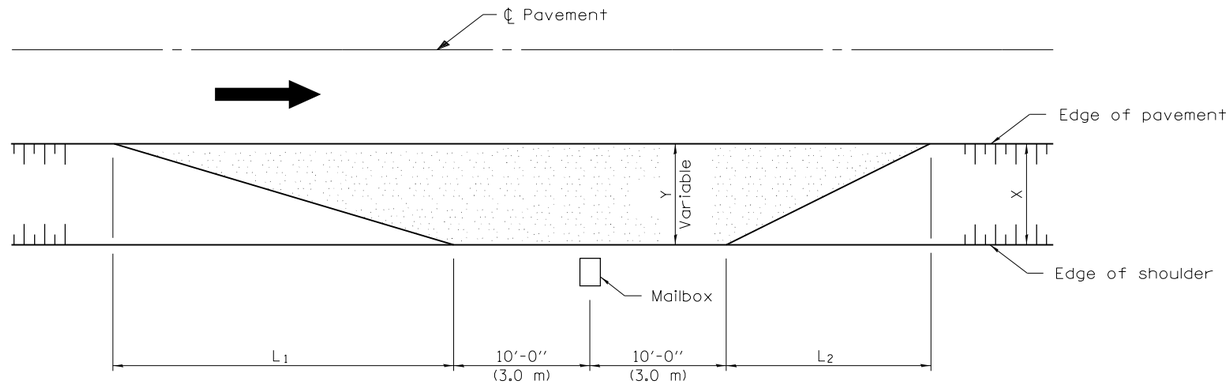


**TYPICAL APPLICATION**

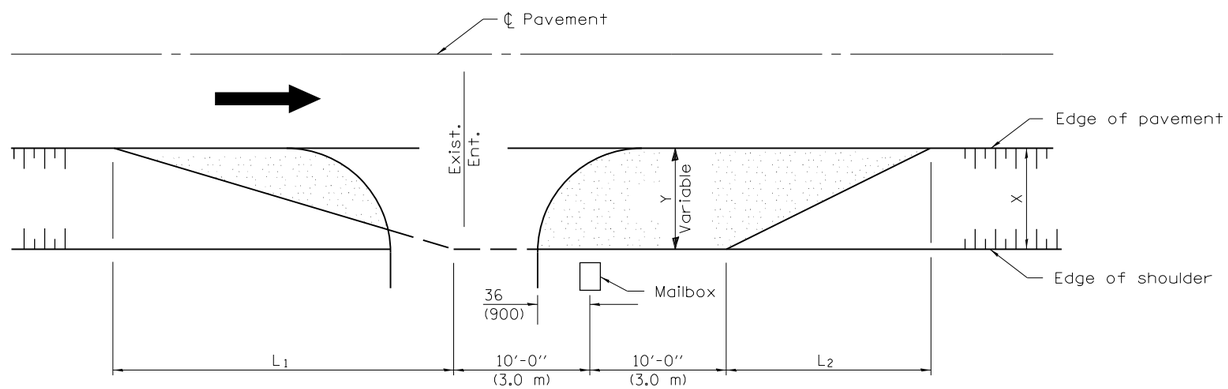


**MAILBOX ON FARSIDE OF ENTRANCE**

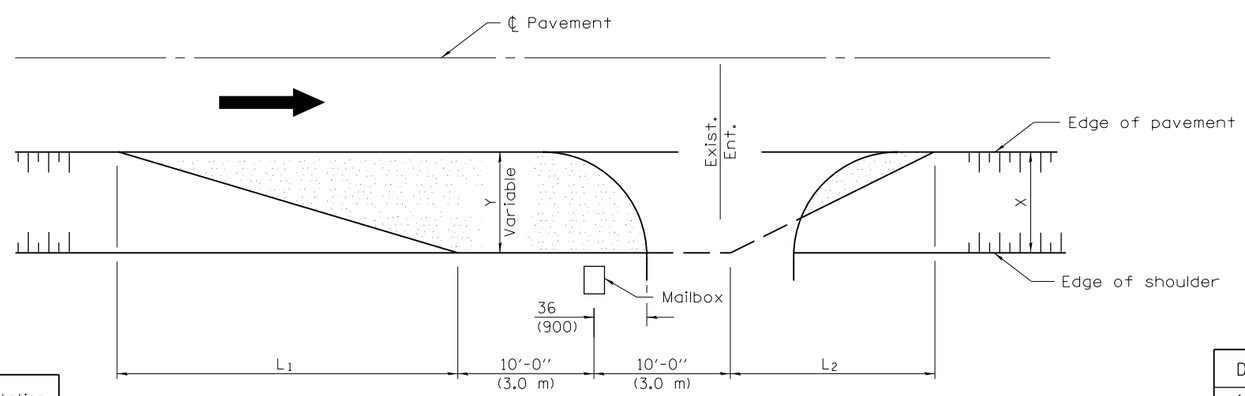


**MAILBOX ON NEARSIDE OF ENTRANCE**

| DIMENSIONS - ft. (m) | | | | | | |
|---|---|---|---|---|---|---|
| Width of Shoulder (X) | 12 (3.6) | 10 (3.0) | 8 (2.4) | 6 (1.8) | 5 (1.5) | 4 (1.2) |
| Width of Turnout (Y) | 8 (2.4) | 8 (2.4) | 6 (1.8) | 4 (1.2) | 4 (1.2) | 4 (1.2) |
| $L_1$ | 30 (9.0) | 30 (9.0) | 23 (6.9) | 15 (4.5) | 15 (4.5) | 15 (4.5) |
| $L_2$ | 20 (6.0) | 20 (6.0) | 15 (4.5) | 10 (3.0) | 10 (3.0) | 10 (3.0) |

Note:
Dimensions for Township and District Roads may vary from the above dimensions.

## GENERAL NOTES

Mailboxes shall be mounted such that the face of the mailbox is 6 (150) to 12 (300) and the post a minimum of 24 (600) from the edge of the turnout surfacing.

All dimensions are in inches (millimeters) unless otherwise shown.

Illinois Department of Transportation

APPROVED January 1, 2009
ENGINEER OF LOCAL ROADS AND STREETS
APPROVED January 1, 2009
ENGINEER OF DESIGN AND ENVIRONMENT

ISSUED 1-1-97

| DATE | REVISIONS |
|---|---|
| 1-1-09 | Switched units to |
| | English (metric). |
| | |
| 1-1-99 | Add width of shoulder X. |
| | |
| | |

# MAILBOX TURNOUT FOR LOCAL ROADS

**STANDARD B.L.R. 24–2**

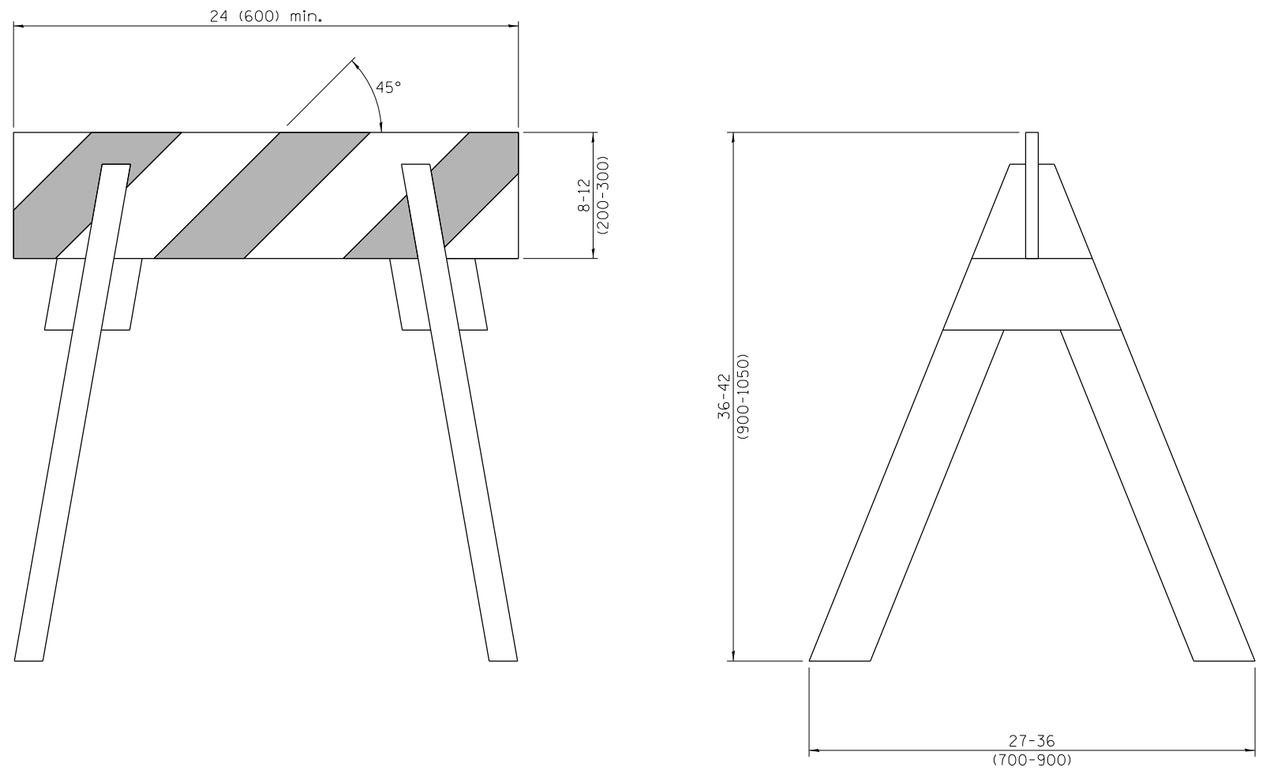


All dimensions are in inches (millimeters) unless otherwise shown.

Illinois Department of Transportation

APPROVED January 1, 2009
ENGINEER OF LOCAL ROADS AND STREETS

APPROVED January 1, 2009
ENGINEER OF DESIGN AND ENVIRONMENT

ISSUED 1-1-03

| DATE | REVISIONS |
|---|---|
| 1-1-09 | Switched units to |
| | English (metric). |
| | |
| 1-1-03 | New standard from |
| | 702001-02 |
| | |

# TYPE 1A BARRICADE FOR NON–NHS ROUTES

**STANDARD B.L.R. 25–1**

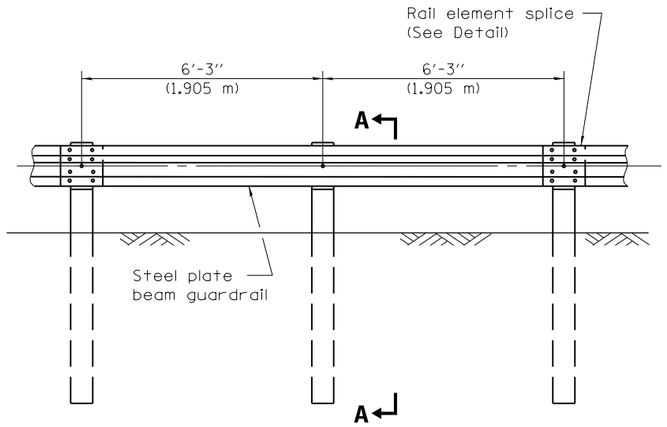


**ELEVATION**

**TYPE A**

6'-3" (1.905 m) Typical post spacing

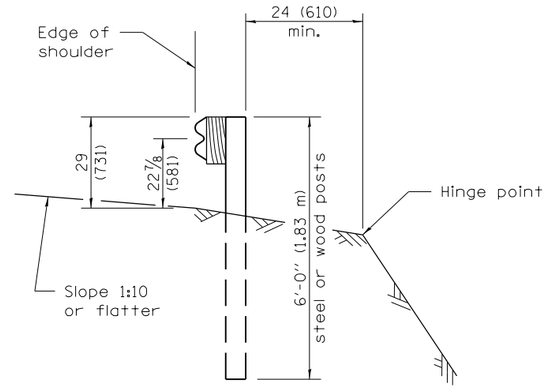


**SECTION A–A**

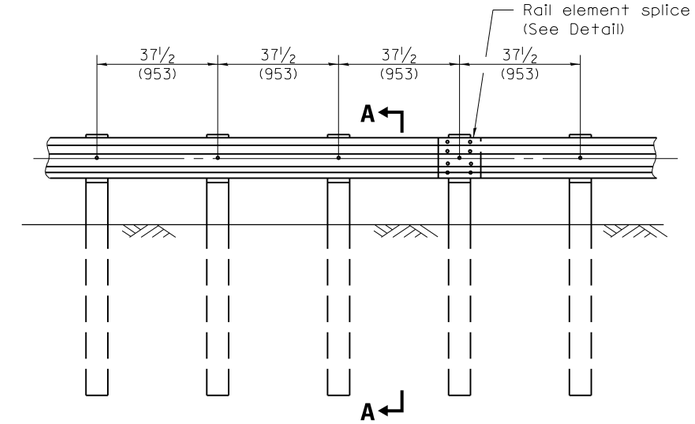


**ELEVATION**

**TYPE B**

37 1/2 (953) Closed post spacing

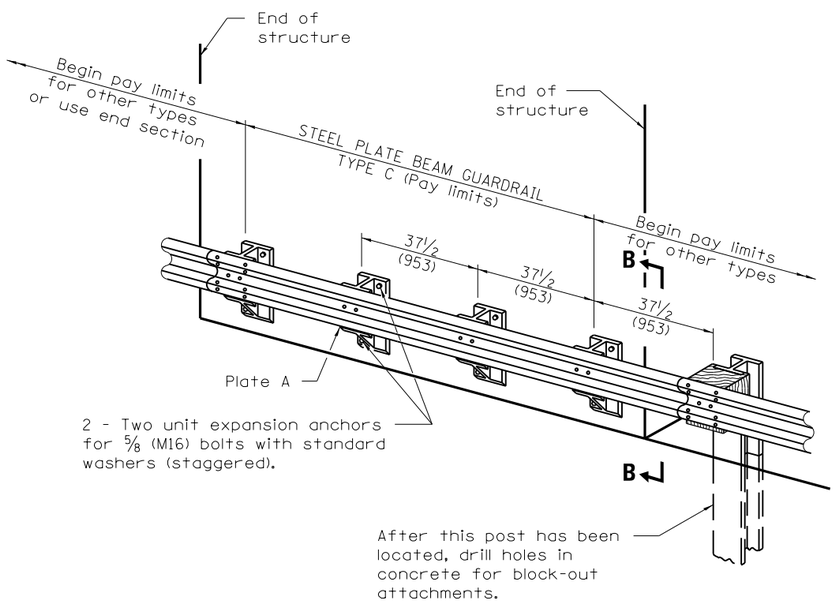


**TYPE C**

37 1/2 (953) Block-out spacing

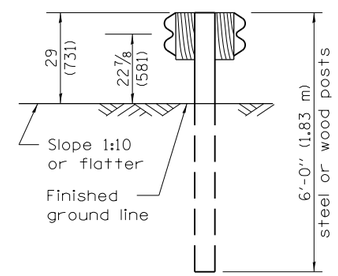


**SECTION C–C**

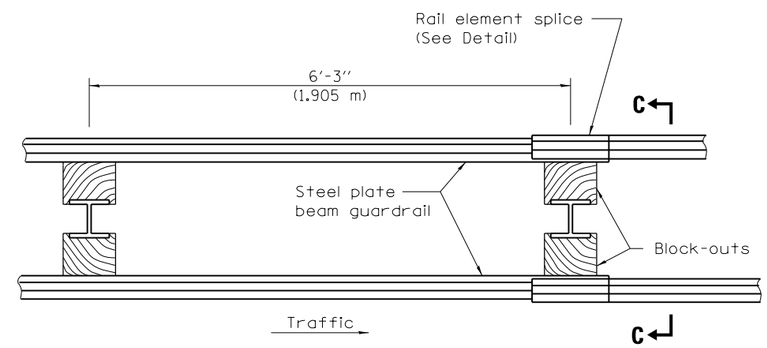


**PLAN**

**TYPE D**

Double steel plate beam guardrail
6'-3" (1.905 m) typical post spacing

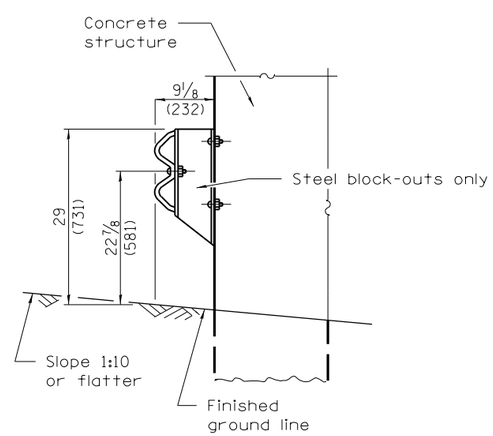


**SECTION B–B**

## GENERAL NOTES

All slope ratios are expressed as units of vertical displacement to units of horizontal displacement (V:H).

All dimensions are in inches (millimeters) unless otherwise shown.

Illinois Department of Transportation

APPROVED January 1, 2012
ENGINEER OF LOCAL ROADS AND STREETS

APPROVED January 1, 2012
ENGINEER OF DESIGN AND ENVIRONMENT

ISSUED 1-1-08

| DATE | REVISIONS |
|---|---|
| 1-1-12 | Revised guardrail height. |
| | Modified table on sh. 4. |
| | Renamed standard. |
| 1-1-10 | Changed post length |
| | from 6'-9" to 6'-0". |
| | Modified table on sh. 4. |

# STEEL PLATE BEAM GUARDRAIL 29" (731mm) HEIGHT

(Sheet 1 of 4)

**STANDARD B.L.R. 26–3**

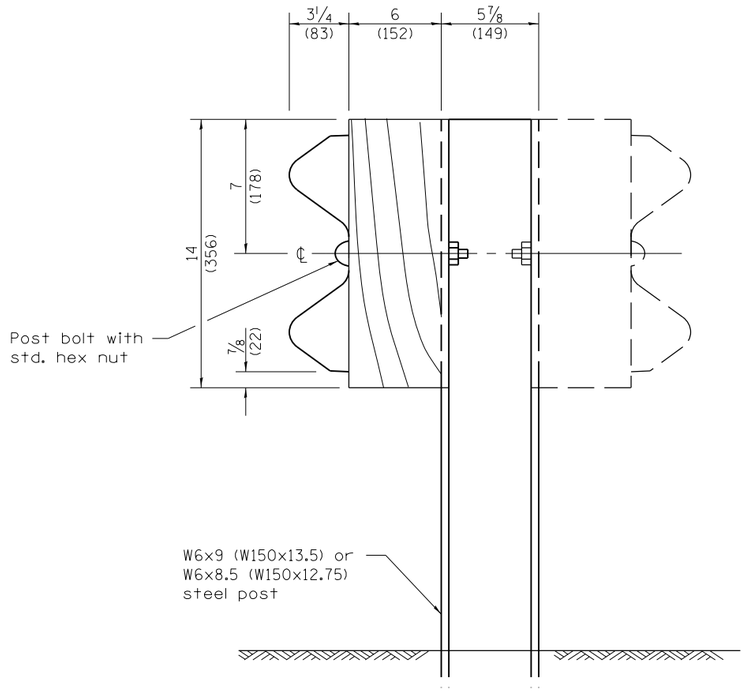


**STEEL POST CONSTRUCTION**

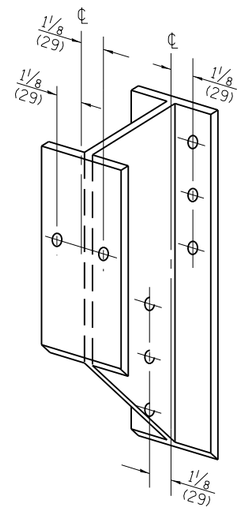


**STEEL BLOCK–OUT DETAIL**

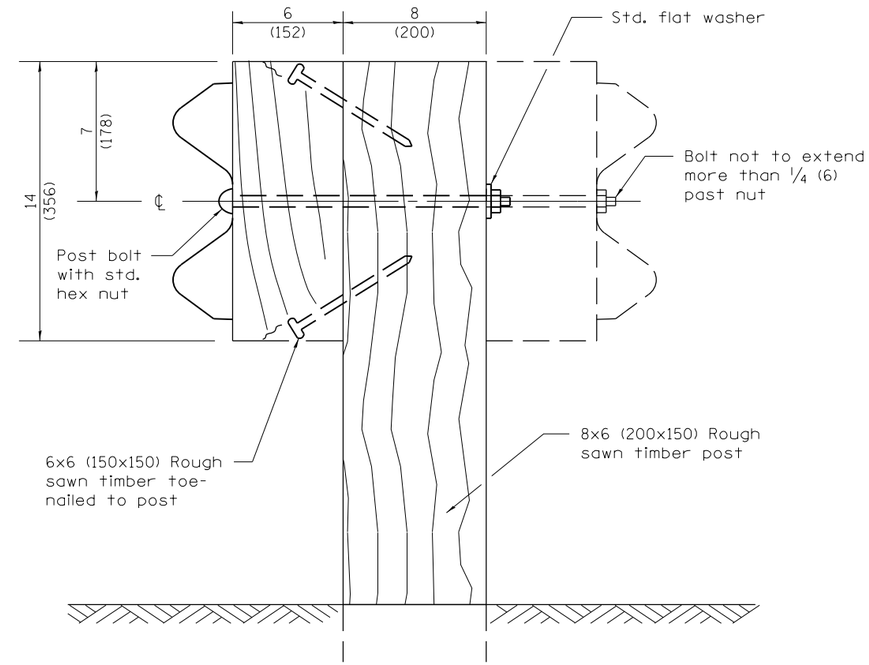


**WOOD POST CONSTRUCTION**

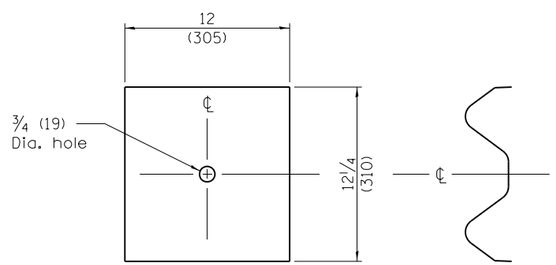


NOTE
Plate A shall be placed between rail element and block-out at non-splice mounting points only when steel block-outs are used.

**PLATE A**

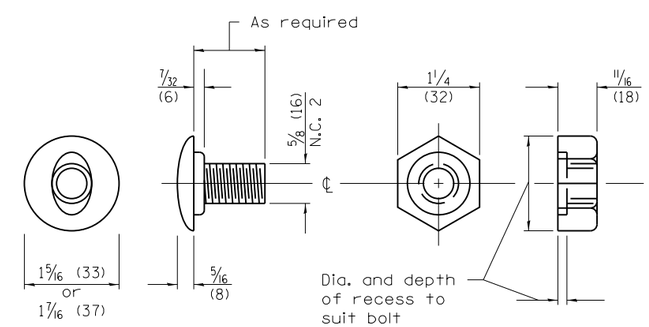


**POST OR SPLICE BOLT & NUT**

Illinois Department of Transportation

APPROVED January 1, 2012
ENGINEER OF LOCAL ROADS AND STREETS
APPROVED January 1, 2012
ENGINEER OF DESIGN AND ENVIRONMENT

ISSUED 1-1-08

# STEEL PLATE BEAM GUARDRAIL 29" (731mm) HEIGHT

(Sheet 2 of 4)

**STANDARD B.L.R. 26–3**

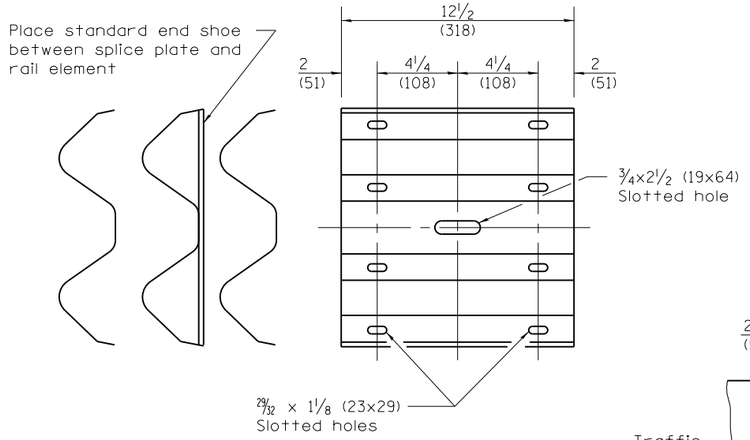


## SPLICE PLATE

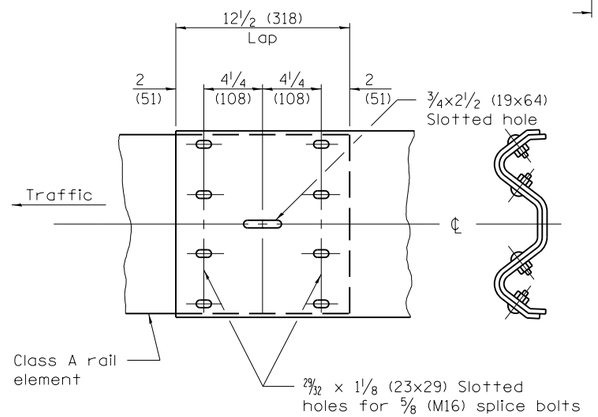


## RAIL ELEMENT SPLICE

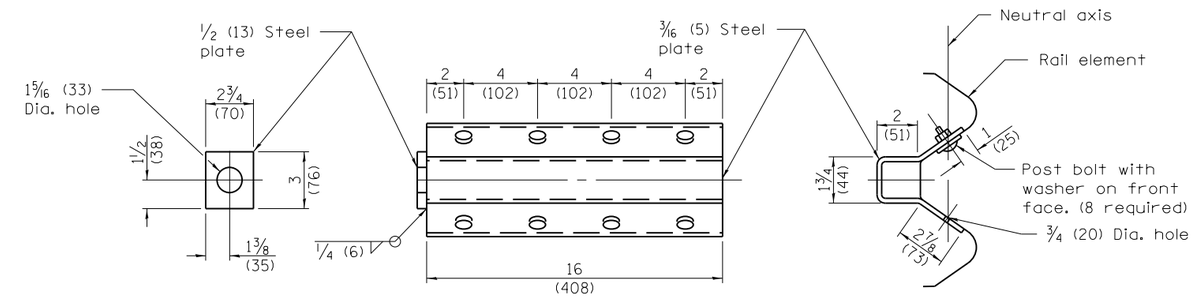


NOTE
Anchor plate T shall be used to attach cable assembly to guardrail when required on traffic barrier terminals.

## ANCHOR PLATE T DETAILS

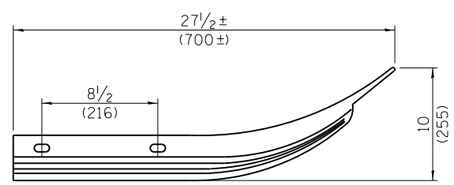


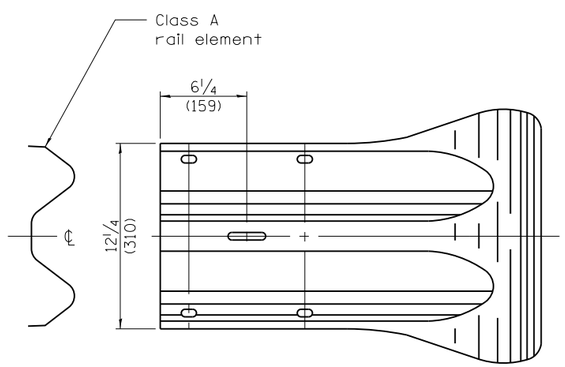


## END SECTION

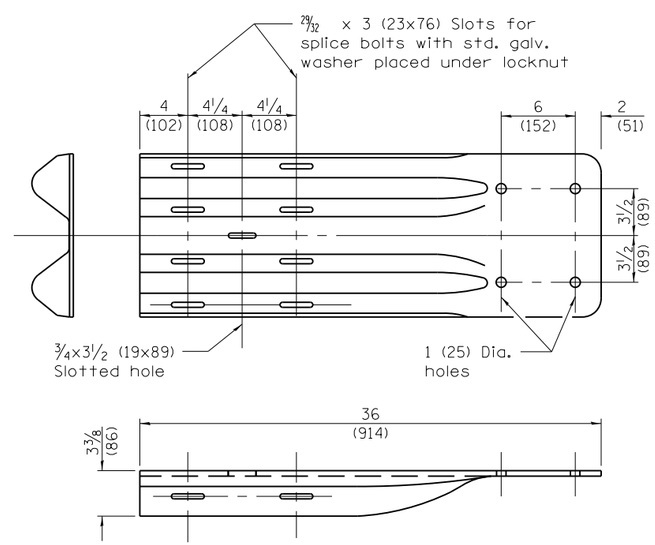


NOTE
When end shoe is attached to a bridge parapet which has an expansion joint, the bolts shall be provided with a locknut or double nut and shall be tightened only to a point that will allow guardrail movement.

The standard end shoe shall be attached to the concrete with pre-drilled or self-drilling anchor bolts. The anchor cone shall be set flush with the surface of the concrete.

Externally threaded studs protruding from the surface of the concrete will not be permitted.

## END SHOE

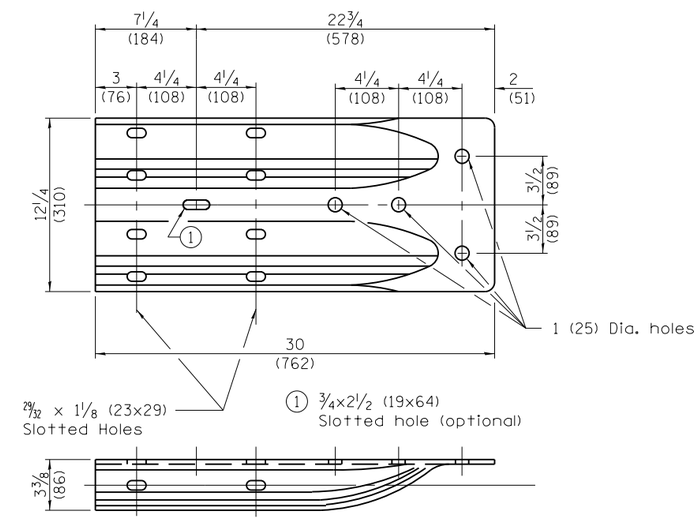


## ALTERNATE END SHOE

Illinois Department of Transportation

APPROVED January 1, 2012
ENGINEER OF LOCAL ROADS AND STREETS
APPROVED January 1, 2012
ENGINEER OF DESIGN AND ENVIRONMENT

ISSUED 1-1-08

# STEEL PLATE BEAM GUARDRAIL 29" (731mm) HEIGHT

(Sheet 3 of 4)

**STANDARD B.L.R. 26–3**

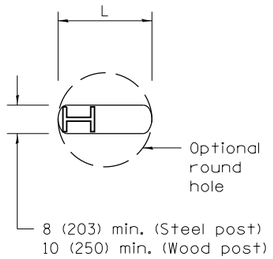


**PLAN**

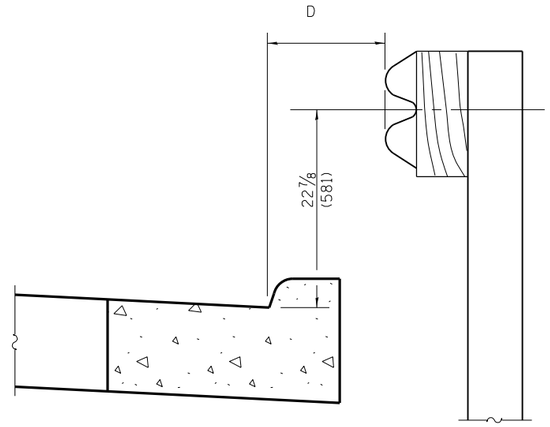


Note:
If it is necessary for D to be more than 12 (300) and less than 10'-0" (3.0 m) Type M-2 (M-5) curb and gutter (Std. 606001) shall be used in front of and in advance of the guardrail.

**GUARDRAIL PLACED BEHIND CURB**

(D = 0 desirable to 12 (300) maximum)

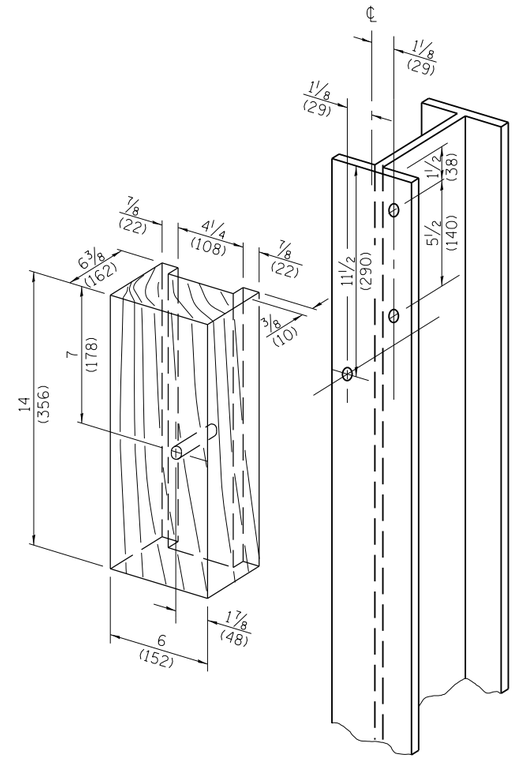


**WOOD BLOCK-OUT AND STEEL POST DETAILS**

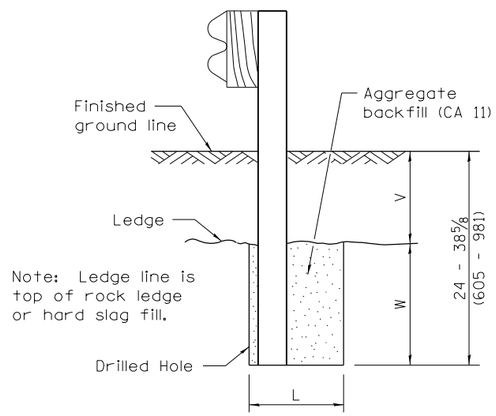


**ELEVATION**

**FOOTING FOR POST WHEN IMPERVIOUS MATERIAL IS ENCOUNTERED**

| V | W | L | |
|---|---|---|---|
| | | Steel Post | Wood Post |
| 0 - 16 1/8 (0 - 410) | 24 (610) | 21 (530) | 23 (580) |
| >16 1/8 - 28 1/8 (>410 - 714) | 12 (305) | 8 (203) | 10 (250) |
| >28 1/8 - 38 5/8 (>714 - 981) | 12 - 0 (305 - 0) | 8 (203) | 10 (250) |

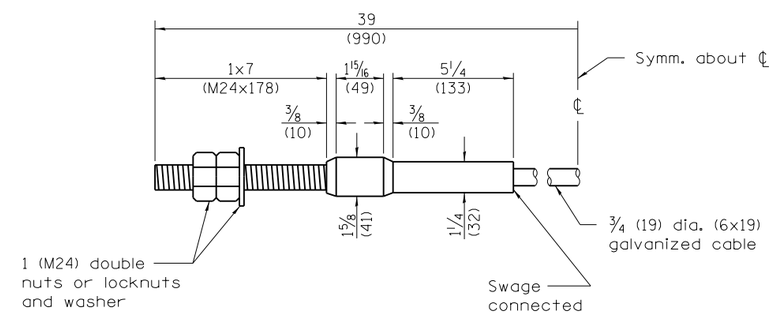


**CABLE ASSEMBLY**

(40,000 lbs. (18,100 kg) min. breaking strength)
Tighten to taut tension.

Illinois Department of Transportation

APPROVED January 1, 2012
ENGINEER OF LOCAL ROADS AND STREETS
APPROVED January 1, 2012
ENGINEER OF DESIGN AND ENVIRONMENT

ISSUED 1-1-08

# STEEL PLATE BEAM GUARDRAIL 29" (731mm) HEIGHT

(Sheet 4 of 4)

**STANDARD B.L.R. 26-3**

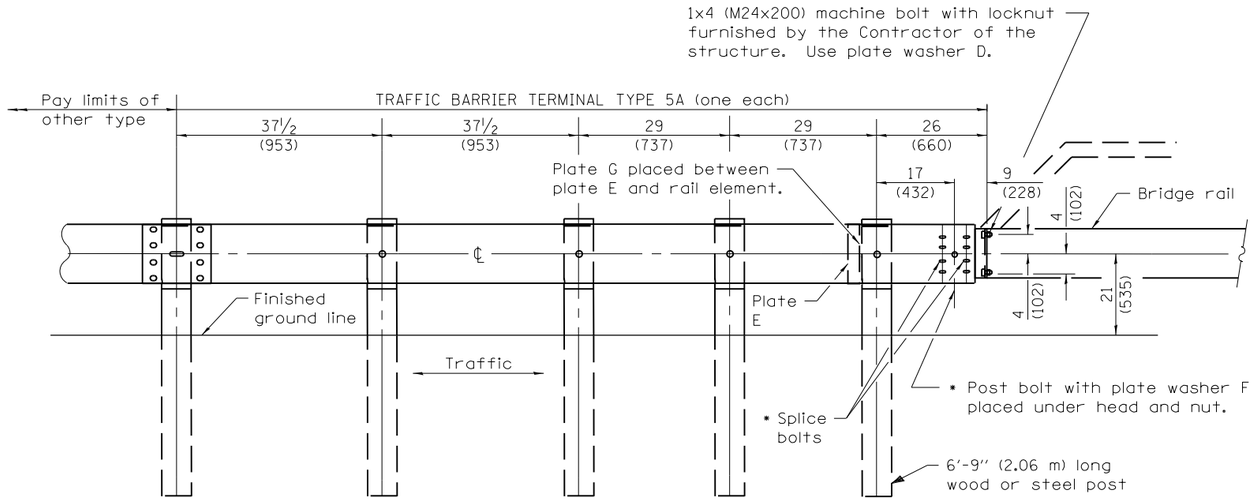


## TYPE 5A – STEEL BRIDGE RAIL

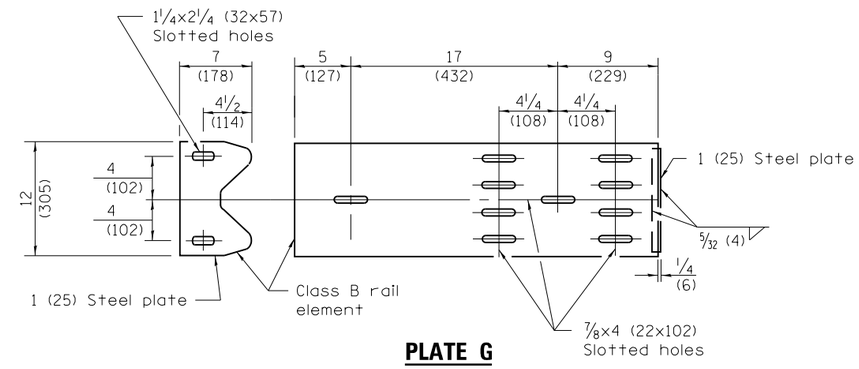


## PLATE G

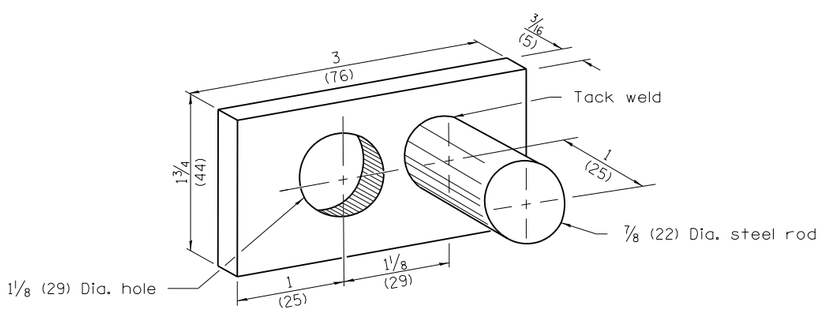


## PLATE WASHER D

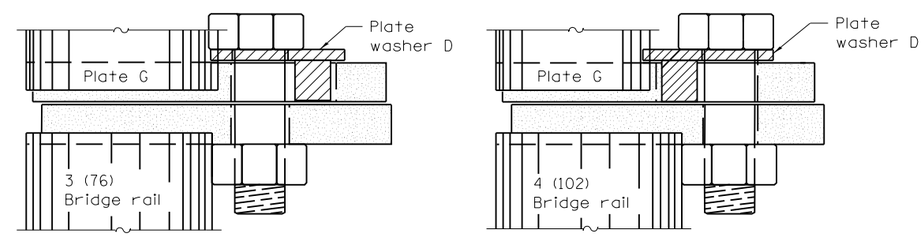


## PLACEMENT OF PLATE WASHER D

(PLAN)

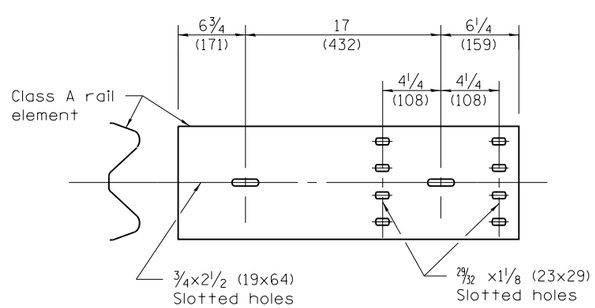


## PLATE E

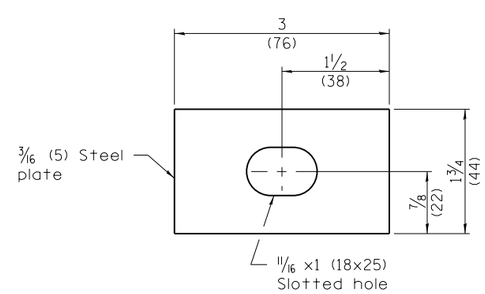


## PLATE WASHER F

## GENERAL NOTES

See Standard B.L.R. 26 for details of guardrail not shown.

Install plate washer D so the 1 (25) projection fills the remainder of the slotted holes in the 1 (25) end plate on plate G after the 1 (M24) dia. bolts are in place.

When an expansion joint exists below the connector, bolts shall be provided with a locknut or double nuts and shall be tightened only to a point that will allow plate G to be free to move.

The face of the guardrail shall be installed flush with the face of the bridge rail.

When this terminal is used with Standard 630001, the guardrail shall transition down to the height of the terminal.

All dimensions are in inches (millimeters) unless otherwise shown.

Illinois Department of Transportation

APPROVED January 1, 2009
ENGINEER OF LOCAL ROADS AND STREETS
APPROVED January 1, 2009
ENGINEER OF DESIGN AND ENVIRONMENT

ISSUED 1-1-08

| DATE | REVISIONS |
|---|---|
| 1-1-09 | Switched units to |
| | English (metric). |
| | |
| 1-1-08 | New Standard. Was part |
| | of Std. 631026 prior to |
| | January 1, 2007. |

# TRAFFIC BARRIER TERMINAL TYPE 5A

STANDARD B.L.R. 27–1