Illinois Department of Transportation

Phase I Report Approval

Key Route: I-57 Marked Route/Road Name: I-57

Job No.: P-99-005-13 Contract No.: N/A

Section: I-57 Add Lane-2 Project Length: 33 miles

PPS No.: N/A County(ies): Williamson, Franklin, & Jefferson

Location/Limits: Begins 1/2 mile North of Stiritz Road and ends at the I-64/I-57 Interchange

General Description of Existing Facility: I-57 is a 4-lane interstate with a posted speed of 70 mph and a 2016 ADT of 38,250.

Need for Proposed Improvement: To increase capacity of the interstate/

Scope of Project: ☐ New Construction ☐ Reconstruction ☐ 3R ☐ 3P

☐ SMART ☒ Other Widening > 6'

General Description of Proposed Improvement: Proposed work includes adding a lane in both the northbound and southbound directions. Median ditches will be graded and median drainage structures widened or a closed median with concrete barrier will be used. Existing structures will be widened.

Environmental Processing: ☐ EIS ☐ EA ☒ Federal Approved CE

☐ State Approved CE ☐ Other

Approximate Amount of ROW to be Purchased: 0 Parcels Totaling 0 Acres.

Number of Businesses 0 and Residences 0 to be Acquired. ROW Cost: $ 0

Estimated Program Cost: $ $185,000,000 (in FY N/A) Fund Type: not programmed

Construction Cost: $ $185,000,000 Utility Reloc. Cost: $ 0 Consultant PE Cost: $ 0

Design Exceptions:

- Level One Required? ☐ Yes ☒ No
- Level Two Required? ☐ Yes ☒ No
- If yes, note date approved:

Type of Public Involvement Activity:

- Public Hearing Offered? ☐ Yes ☒ No
- Informational Meeting Held? ☐ Yes ☒ No
- Property Owners Contacted? ☐ Yes ☒ No

Regional Design Approval Jeffrey L Keirn Date: 1/25/17

IDOT Regional Engineer Signature

Printed 1/11/2017

BDE 1201 (Rev. 02/09/16)
Formerly BDE 2601

Illinois Department of Transportation

Categorical Exclusion Determination and Approval

Key Route	Marked Route/Road Name
FAI-57	I-57
Section	**Job Number**
I-57 Add Lane 2	P-99-005-13
County(ies)	**Contract Number**
FRANKLIN, JEFFERSON, AND WILLIAMSON	N/A

☐ State Approved Categorical Exclusion (CE)

IDOT has addressed all environmental requirements for this project and determined that it has met the following requirements for a State Approved CE in the CE Programmatic Agreement (approved 10/14/15): (1) the scope is consistent with the project scope listed in Appendix ☐ A or ☐ B , item number _____ and (2) none of the circumstances in Section V exist. Therefore, on behalf of FHWA, IDOT hereby approves this project as a State Approved CE.

Approved by
Signature of Regional Engineer _____ Date _____

☒ Federal Approved Categorical Exclusion

After reviewing the project information provided, FHWA has determined that this project will not have any significant impacts on the human environment and approves its designation as a Federal Approved CE.

Approved by
Signature of FHWA Representative _____ Date 01/25/2017

Wetland Impacts Involved

☐ Yes ☒ No

The FHWA issued a programmatic Wetland Finding for CEs on October 14, 2015, in compliance with Executive Order 11990, Protection of Wetlands. The programmatic Wetland Finding is contained in the CE Agreements, available online in the BDE Manual Appendix A.

Illinois Department of Transportation

FACT SHEET
ROADWAY IMPROVEMENT

ROUTE: FAI 57 (I-57)

COUNTY: Williamson, Franklin, & Jefferson

SECTION: I-57 Add Lane-2 **PPS NO.:** N/A

JOB NO.: P-99-005-13 **CONTRACT NO.:** N/A

PROGRAMMED YR.: Not programmed at this point

TERMINI: Begins at station 58+00 (½ mile north of Stiritz Rd) in Williamson County & ends at the I-64/I-57 Interchange in Jefferson County

HIGHWAY FUNCTIONAL CLASSIFICATION: I-57 (FAI 57) - Interstate

TRUCK ROUTE CLASS: I-57 (FAI 57) - CLASS I

TYPE OF IMPROVEMENT: Proposed work includes adding a lane in both the northbound and southbound directions. Median ditches will be graded and median drainage structures widened or a closed median with concrete barrier will be used. Existing structures will be widened.

TYPE OF PROJECT FUNDING: 90% Federal / 10% State Interstate Maintenance

NATIONAL HIGHWAY SYSTEM? X YES __ NO

CURRENT ADT:	ADT(2016)	%TRUCKS
I-57 (NB and SB)		
At Johnston City	37,500	28%
At West Frankfort	34,500	32%
At Benton	31,300	41%
At Ina	30,600	39%
At I-57/I-64 Interchange	38,700	34%

SURROUNDING LAND USE: Residential, commercial, & agricultural

RIGHT-OF-WAY WIDTH : Existing ROW width varies

PAVEMENT SURFACE CONDITION: CRS north of Benton = 8.6
CRS south of Benton = 8.5

NUMBER OF LANES:	EXISTING	PROPOSED
I-57 NB	2-12' lanes	3-12' lanes
I-57 SB	2-12' lanes	3-12' lanes

SHOULDER WIDTH:

	EXISTING	PROPOSED
I-57 SB (inside)	6' HMA	12' HMA
I-57 SB (outside)	10' HMA	12' HMA
I-57 NB (inside)	6' HMA	12' HMA
I-57 NB (outside)	10' HMA	12' HMA

CLEAR ZONE WIDTH:

I-57	30'	30'
Vertical Alignment	Meets Design Policy	Meets Design Policy

Right of Way Required - 0 takings

ARE THERE ANY BRIDGES IN THIS SECTION? X YES __NO

WHAT HAS A FIELD CHECK INDICATED ON CULVERT EXTENSIONS, SIDE ROAD CULVERT IMPROVEMENTS, AND OTHER SAFETY WORK? Adjust/extend median drainage structures. Policy guardrail will be placed.

WHAT HAS A REVIEW OF ACCIDENT DATA SHOWN?

There are 0 -5% locations on I-57 within the project limits.

	POSTED SPEED:	**DESIGN SPEED:**
I-57	70 mph	70 mph

CHECK DESIGN POLICY USED:

_ Policies for the rehabilitation of highways and bridges on unmarked routes of the state highway system in Illinois.

_ 3R Policies for the rehabilitation of arterial highways and bridges for other than freeways and expressways on the federal-aid system in Illinois.

X Reconstruction Policy for rural and urban freeways on the federal-aid system in Illinois.

LIST AND INDICATE REASONS FOR POLICY DEVIATIONS:

DO EXISTING ALIGNMENTS MEET POLICY?
HORIZONTAL: X Yes __ No
VERTICAL: X Yes __ No

IS RESURFACING THICKNESS IN ACCORD WITH APPROPRIATE "3R GUIDELINES" AND BDE PROCEDURE MEMORANDUM 29-02?
X Yes __ No

REASONS: N/A

DISCUSS OTHER DEVIATIONS: N/A

TRAFFIC MANAGEMENT ANALYSIS: Will be completed when project is funded

RAILROAD DATA: N/A

BICYCLE AND PEDESTRIAN ACCOMMODATION: Bicycle and pedestrian access is prohibited along the fully access controlled highway facility.

PARKING: N/A

DESCRIBE ANY PROPOSED ADA WORK (SIDEWALK RAMPS, ETC.): N/A

SIGNALS TO BE INSTALLED OR MODERNIZED? N/A

LIGHTING: Existing lighting at interchanges will remain in place.

UTILITIES/ENCROACHMENTS: All utilities will be adjusted before or during construction.

DRAINAGE (FLOODPLAIN, DETENTION, ETC.): N/A

4(f) SITES ON FEDERAL-AID PROJECTS? __ Yes X No

IS AN ENVIRONMENTAL SURVEY REQUEST REQUIRED (BY DEPARTMENT POLICY)?
x Yes __ No

DESCRIBE ANY IDENTIFIED ENVIRONMENTAL ISSUES (INCLUDE ANALYSES OF CONSTRUCTION NOISE AND AIR QUALITY):

Biological Clearance: January 31, 2014
Cultural Clearance: March 12, 2014 Special Waste: October 2, 2014

NOISE ANALYSIS:
The Federal Highway Administration (FHWA) Traffic Noise Model (TNM) was used to model the existing condition, the build year (2015 - Build and No-Build scenerios) and the Design Year (2040 - Build and No-Build scenarios). The noise analysis for the receptor sites analyzed, has shown that the predicted noise levels will exceed the FHWA Noise Abatement Criteria (NAC). The predicted noise levels were analyzed using 58 receptor sites utilizing TNM are as follows:

Existing year, no-build scenerio: 49 dB to 76 dB
Design year (2024), no-build scenario: 51 dB to 78dB
Design year (2024), build scenario: 51 dB to 78 dB

Based on the modeled analysis, a traffic noise impact will occur and, therefore, based on feasibility and reasonableness criteria noise barriers are recommended north of the outlet mall in West Frankfort and at KOA Campground on the west side of I-57 near Petroff Rd.

AIR QUALITY ANALYSIS:
No portion of this project is within a designated nonattainment or maintenance area for any of the air pollutants for which the USEPA has established standards. Accordingly, a conformity determination under 40 CFR Part 93 ("Determining Conformity of Federal Actions to State or Federal Implementation Plans") is not required.

This project is of a type qualifying as a categorical exclusion (Federal Approved CE) under 23 CFR 771.117(c), or exempt under the Clean Air Act conformity rule under 40 CFR 93.126, and, as such, a Mobile Source Air Toxics analysis is not required.

In accordance with the IDOT-IEPA "Agreement on Microscale Air Quality Assessments for IDOT-Sponsored Transportation Projects," this project is exempt from a project-level carbon monoxide analysis because no intersections are being improved with the proposed project.

PERMIT STATUS (TOPIC 6-280), SECTION 404/401WQC, NPDES:

404/401WQC: Will be requested when project is funded

NPDES: Will be completed when project is funded

HAZARDOUS MAILBOXES: None

CLEARINGHOUSE SIGN-OFF FOR FEDERAL-AID PROJECTS:
State- N/A
Regional- N/A

HAVE ANY SPECIAL EROSION CONTROL OR TREE RETENTION COMMITMENTS BEEN MADE? ___ Yes _X_ No

LIST OF EXHIBITS

1. Location Map
2. Typical
3. Cost Estimate Form
4. Accident Data
5. District Coordination Meeting Minutes
6. Interstate Safety Review Meeting Minutes
7. Environmental Documentation
8. Design Criteria Checklist

EXHIBIT 1

LOCATION MAP

LOCATION MAP

FAI 57 (I-57)
SECTION I-57 Add Lane-2
Williamson, Franklin, & Jefferson Counties

THIS IS AN ADD LANE PROJECT PROPOSED FOR BOTH THE NORTHBOUND AND SOUTHBOUND LANES OF INTERSTATE 57.

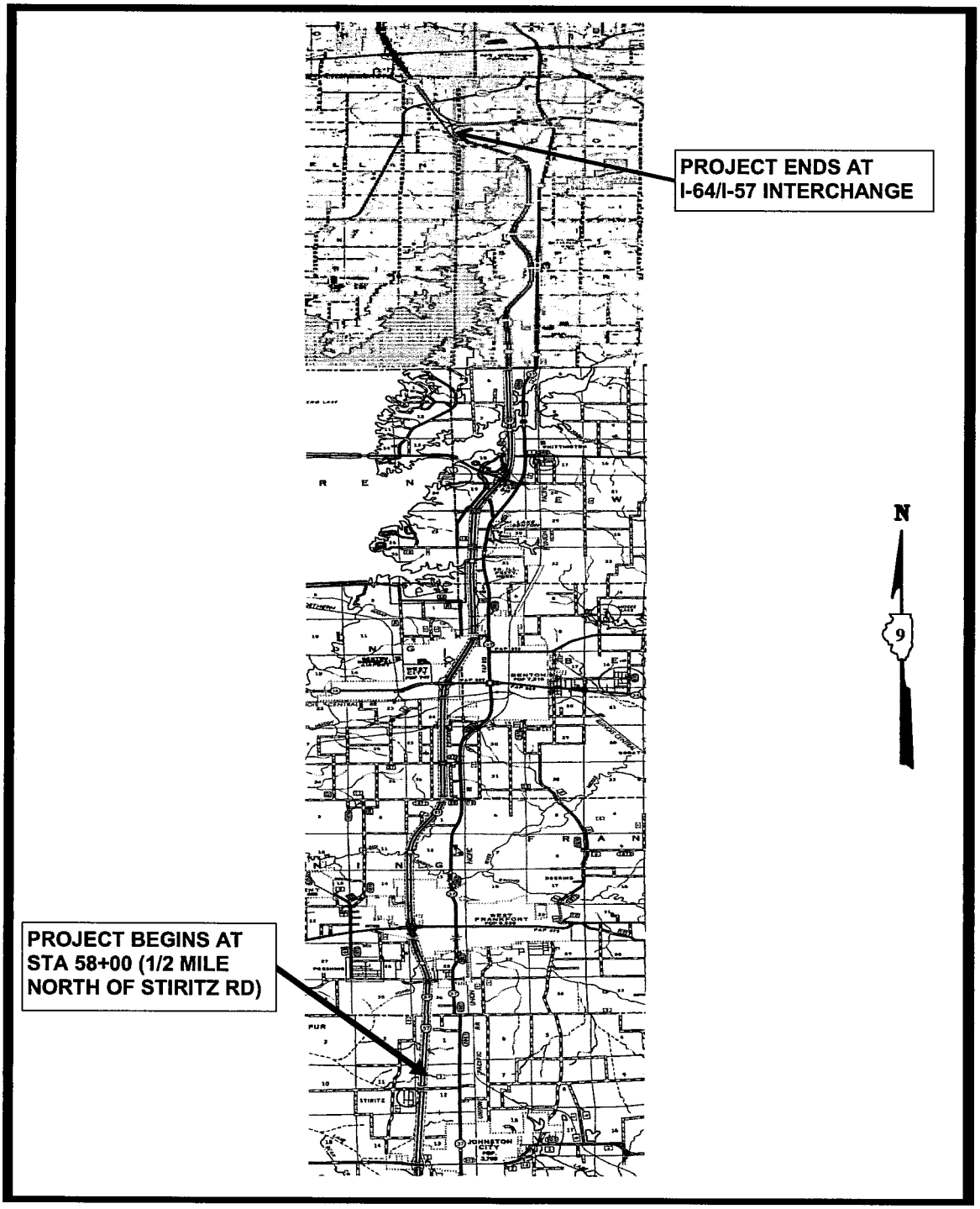

EXHIBIT 2

TYPICALS

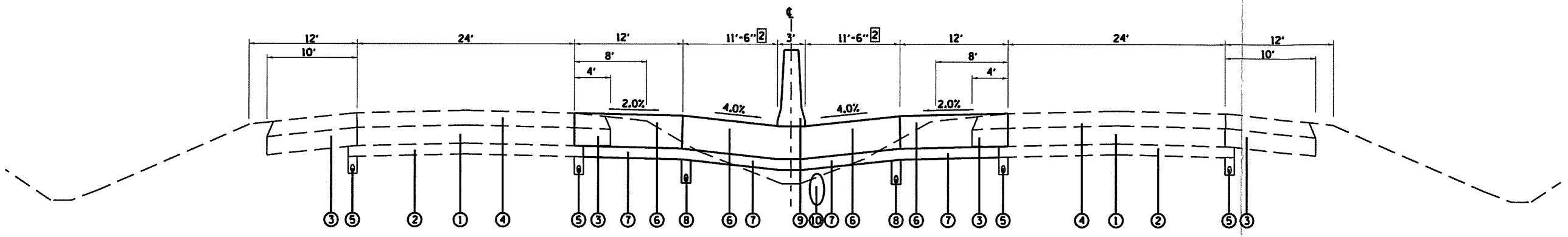

TANGENT SECTION

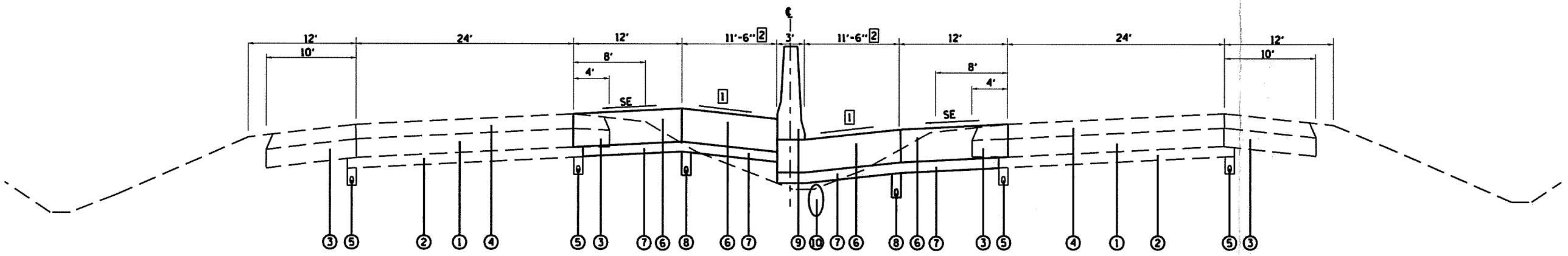

SUPERELEVATION SECTION

1 SEE STANDARD 482001 FOR SHOULDER CROSS SLOPE

2 12' SHOULDERS ARE DESIRABLE
10' SHOULDERS ARE ACCEPTABLE

NOTES:
1. ASSUMES FUTURE EXISTING OUTSIDE SHOULDER IS ADEQUATE TO CARRY TEMPORARY TRAFFIC DURING CONSTRUCTION.
2. PAVEMENT DESIGN BY IDOT

LEGEND

1. EXISTING RUBBILIZED PCC PAVEMENT 10"
2. EXISTING SUBBASE GRANULAR MATERIAL 6"
3. EXISTING STABILIZED SHOULDER
4. EXISTING HMA PAVEMENT
5. EXISTING SUB-SURFACE DRAINS
6. PROPOSED FULL DEPTH HMA PAVEMENT
7. PROPOSED SUBBASE GRANULAR MATERIAL
8. PROPOSED SUB-SURFACE DRAINS
9. PROPOSED CONCRETE BARRIER DOUBLE FACE 42" HEIGHT
10. PROPOSED STORM SEWER

FILE NAME = pw:\\IL084EBIDINTEG.illinois.gov:PWIDOT\Documents\IDOT Offices\District 9\Projects\I57_ADD_LANE_2\CADData\CADsheets\existing_50_median_cols-inside_widening.dgn	USER NAME = steinc	DESIGNED -	REVISED -
		DRAWN RLC-Stiritz	REVISED -
	PLOT SCALE = 102.996 ' / in.	CHECKED -	REVISED -
$MODELNAME$	PLOT DATE = 12/21/2016	DATE -	REVISED -

STATE OF ILLINOIS
DEPARTMENT OF TRANSPORTATION

TYPICAL SECTION – INSIDE WIDENING
EXISTING 50' MEDIAN

SCALE: _____ | SHEET ___ OF ___ SHEETS | STA. _____ | TO STA. _____

F.A.I RTE.	SECTION	COUNTY	TOTAL SHEETS	SHEET NO.
57	1-57 ADD LANE-2	*		
		CONTRACT NO. _____		
	ILLINOIS FED. AID PROJECT			

*WILLIAMSON & FRANKLIN

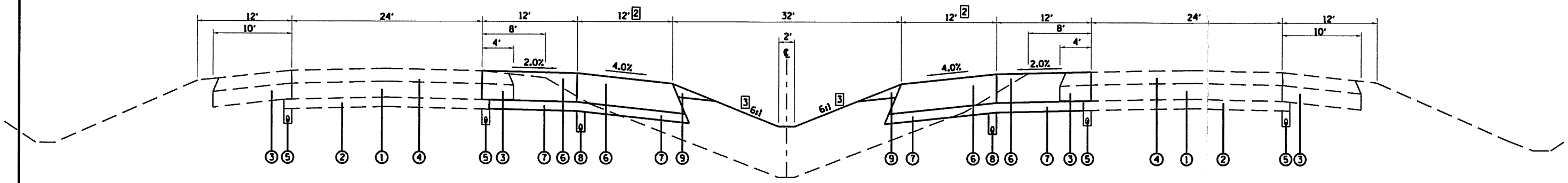

TANGENT SECTION

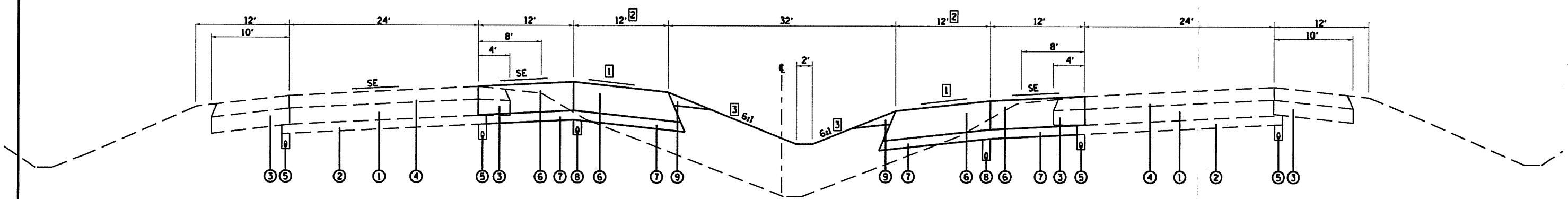

SUPERELEVATION SECTION

1 SEE STANDARD 482001 FOR SHOULDER CROSS SLOPE

2 12' SHOULDERS ARE DESIRABLE
10' SHOULDERS ARE ACCEPTABLE

3 VARIES 10:1 TO 4:1 TO OBTAIN POSITIVE DRAINAGE

NOTES:
1. ASSUMES FUTURE EXISTING OUTSIDE SHOULDER IS ADEQUATE TO CARRY TEMPORARY TRAFFIC DURING CONSTRUCTION.
2. PAVEMENT DESIGN BY IDOT

LEGEND

1. EXISTING RUBBILIZED PCC PAVEMENT 10"
2. EXISTING SUBBASE GRANULAR MATERIAL 6"
3. EXISTING STABILIZED SHOULDER
4. EXISTING HMA PAVEMENT
5. EXISTING SUB-SURFACE DRAINS
6. PROPOSED FULL DEPTH HMA PAVEMENT
7. PROPOSED SUBBASE GRANULAR MATERIAL
8. PROPOSED SUB-SURFACE DRAINS
9. PROPOSED AGGREGATE SHOULDERS

FILE NAME = pw:\\IL084EBIDINTEG.illinois.gov:PWIDOT\Documents\IDOT Offices\District 9\Projects\157-ADD LANE-2\RLC-Stiritz\CADData\CADsheets\exhibits\typicals-inside_widening.dgn	USER NAME = steincw	DESIGNED -	REVISED -	STATE OF ILLINOIS DEPARTMENT OF TRANSPORTATION	TYPICAL SECTION – INSIDE WIDENING EXISTING 80' MEDIAN	F.A.I RTE. 57	SECTION 1-57 ADD LANE-2	COUNTY *	TOTAL SHEETS / SHEET NO.
	PLOT SCALE = 102.996 ' / in.	DRAWN	REVISED					CONTRACT NO.	
$MODELNAME$	PLOT DATE = 12/21/2016	CHECKED -	REVISED -		SCALE: SHEET OF SHEETS STA. TO STA.		ILLINOIS FED. AID PROJECT		
		DATE -	REVISED -						

*WILLIAMSON & FRANKLIN

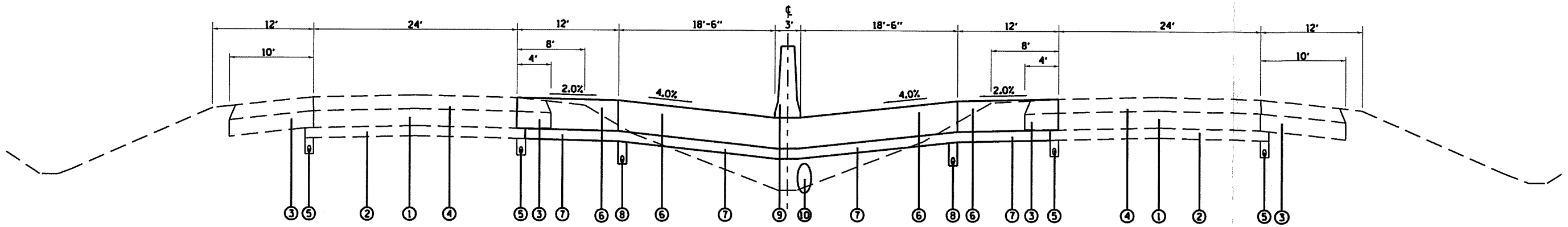

TANGENT SECTION

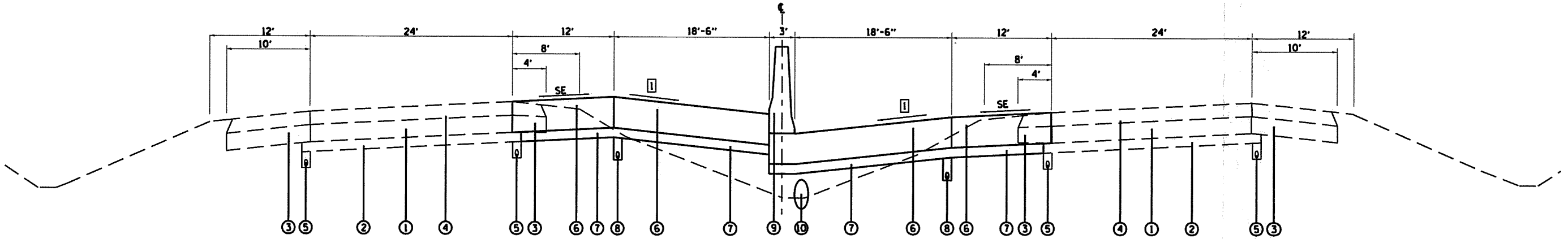

SUPERELEVATION SECTION

1 SEE STANDARD 482001 FOR SHOULDER CROSS SLOPE

NOTES:
1. ASSUMES FUTURE EXISTING OUTSIDE SHOULDER IS ADEQUATE TO CARRY TEMPORARY TRAFFIC DURING CONSTRUCTION.
2. PAVEMENT DESIGN BY IDOT

LEGEND

① EXISTING RUBBILIZED PCC PAVEMENT 10"
② EXISTING SUBBASE GRANULAR MATERIAL 6"
③ EXISTING STABILIZED SHOULDER
④ EXISTING HMA PAVEMENT
⑤ EXISTING SUB-SURFACE DRAINS
⑥ PROPOSED FULL DEPTH HMA PAVEMENT
⑦ PROPOSED SUBBASE GRANULAR MATERIAL
⑧ PROPOSED SUB-SURFACE DRAINS
⑨ PROPOSED CONCRETE BARRIER DOUBLE FACE 42" HEIGHT
⑩ PROPOSED STORM SEWER

FILE NAME = pw:\\IL084EBIDINTEG.illinois.gov:PWIDOT\Documents\IDOT Offices\District 9\Projects\157	USER NAME = steinew	DESIGNED -	REVISED -
		DRAWN RLC-Stiritz\CADData\CADsheets\ex	REVISED -
$MODELNAME$	PLOT SCALE = 102.996 ' / in.	CHECKED -	REVISED -
	PLOT DATE = 12/21/2016	DATE -	REVISED -

STATE OF ILLINOIS
DEPARTMENT OF TRANSPORTATION

TYPICAL SECTION – INSIDE WIDENING
EXISTING 64' MEDIAN

SCALE: _____ SHEET ___ OF ___ SHEETS STA. _____ TO STA. _____

F.A.I RTE.	SECTION	COUNTY	TOTAL SHEETS	SHEET NO.
57	I-57 ADD LANE-2	*		

CONTRACT NO. _____

ILLINOIS FED. AID PROJECT

*WILLIAMSON & FRANKLIN

EXHIBIT 3

COST ESTIMATE FORM

PRELIMINARY ESTIMATE OF COST

Roadway Item	Unit	Cost / Unit	Estimated Quantity	Cost
Earth Excavation	CU YD	$10	154,500	$1,545,000
Furnished Excavation	CU YD	$10	4,200	$42,000
Seeding	ACRE	$2,000	8	$15,000
Erosion Control - Ditch Checks	EACH	$200	45	$9,000
Inlet & Pipe Protection	EACH	$200	615	$123,000
Shoulder Removal	SQ YD	$8	458,250	$3,666,000
Pavement	SQ YD	$85	393,000	$33,405,000
Shoulders	SQ YD	$85	803,400	$68,289,000
Aggregate Shoulders	SQ YD	$20	69,000	$1,380,000
Widen I-57 Structures	SQ FT	$150	66,080	$10,200,000
Replace Deck & Widen Str.	EACH	Varies	1	$3,300,000
Reconstruct Structure	EACH	Varies	1	$3,900,000
Culverts (small)	FOOT	$50	900	$45,000
Storm Sewers	FOOT	$50	93,150	$4,657,500
Storm Sewers (Slotted Drain)	FOOT	$100	100,650	$10,065,000
Pipe Underdrains	FOOT	$7	294,750	$2,063,250
Manholes/Inlets	EACH	$2,000	540	$1,080,000
Modify Manholes/Inlets	EACH	$2,000	75	$150,000
Concrete Median Barrier	FOOT	$65	139,500	$9,067,500
Cable Median Barrier	FOOT	$30	7,950	$238,500
Guardrail	FOOT	$20	0	$0
Traffic Control	LSUM	$2,000,000	1	$2,000,000
Mobilization	LSUM	$5,000,000	1	$5,000,000
			SUBTOTAL	**$160,200,000**
			Contingency 15%	$24,030,000
			TOTAL	**$184,200,000**

EXHIBIT 4

ACCIDENT DATA

ILLINOIS DEPARTMENT OF TRANSPORTATION

GIS Crash Report Details: 2010-2015 Crashes

I-57 Herrin Rd to I-64

Route	Mile	Case ID#	Collision Type	Surface /Weather	Crash Date Time		Direction	Driver Condition	Vehicle Type	Maneuver Code	Fatal Count	Injury Count	Injury Type	Lighting
	0	201001136489	Fixed Object	Snow or Slush Snow	02 / 14 / 10 18 :00	V1 V2	West	Normal	Passenger	Skidding/Control Loss	0	0	PD	Darkness
	0	201001229104	Pedalcyclist	Dry Clear	06 / 25 / 10 16 :00	V1 V2	N/A East	N/A Normal	N/A Motorcycle (Over 150cc)	N/A Straight Ahead	0	2	A-Injury	Daylight
	0	201001266528	Fixed Object	Dry Clear	07 / 30 / 10 00 :00	V1 V2	North	Alcohol Impaired	Passenger	Other	0	1	B-Injury	Darkness
	0	201001376894	Fixed Object	Wet Rain	11 / 30 / 10 08 :00	V1 V2	West	Normal	Pickup	Straight Ahead	0	0	PD	Daylight
	0	201101025207	Fixed Object	Snow or Slush Snow	02 / 10 / 11 00 :00	V1 V2	North	Normal	Tractor With Semi-Trailer	Turning Left	0	0	PD	Darkness
	0	201101070803	Fixed Object	Dry Clear	01 / 30 / 11 03 :00	V1 V2	Northeast	Asleep/Fainted	Passenger	Skidding/Control Loss	0	1	B-Injury	Darkness
	0	201101078923	Overturned	Dry Clear	04 / 06 / 11 05 :00	V1 V2	West	Normal	Tractor With Semi-Trailer	Straight Ahead	0	1	B-Injury	Darkness
	0	201101145991	Animal	Dry Clear	05 / 21 / 11 23 :00	V1 V2	South	Normal	Passenger	Straight Ahead	0	0	PD	Darkness
	0	201101175449	Sideswipe Same Direction	Dry Clear	06 / 18 / 11 22 :00	V1 V2	West West	Other/Unknown Normal	Unknown Pickup	Passing/Overtaking Straight Ahead	0	0	PD	Darkness
	0	201101178134	Other Object	Dry Clear	06 / 17 / 11 16 :00	V1 V2	West	Normal	Passenger	Negotiating A Curve	1	0	Fatal	Daylight
	0	201101178269	Rear End	Dry Clear	05 / 07 / 11 20 :00	V1 V2	East East	Normal Normal	Pickup SUV	Straight Ahead Slow/Stop - Left Turn	0	1	C-Injury	Darkness, Lighted Road
	0	201101296465	Rear End	Dry Clear	08 / 10 / 11 20 :00	V1 V2	East East	Normal Normal	Passenger Passenger	Straight Ahead Straight Ahead	0	1	C-Injury	Darkness, Lighted Road

ILLINOIS DEPARTMENT OF TRANSPORTATION

GIS Crash Report Details: 2010-2015 Crashes

I-57 Herrin Rd to I-64

Route	Mile	Case ID#	Collision Type	Surface /Weather	Crash Date Time		Direction	Driver Condition	Vehicle Type	Maneuver Code	Fatal Count	Injury Count	Injury Type	Lighting
	0	201101322219	Parked Motor Vehicle	Wet Rain	09 / 25 / 11 02 :00	V1 V2	Southeast Southwest	Normal	Passenger Tractor With Semi-Trailer	Backing Parked	0	0	PD	Darkness
	0	201101403679	Rear End	Dry Clear	10 / 16 / 11 16 :00	V1 V2	West West	Normal Normal	Passenger Passenger	Straight Ahead Slow/Stop - Left Turn	0	0	PD	Daylight
	0	201101403731	Parked Motor Vehicle	Dry Clear	12 / 16 / 11 07 :00	V1 V2	North North	Normal	Tractor With Semi-Trailer Tractor With Semi-Trailer	Changing Lanes Parked	0	0	PD	Dawn
	0	201101408684	Rear End	Wet Rain	11 / 21 / 11 17 :00	V1 V2	South South	Normal Normal	Passenger Passenger	Slow/Stop In Traffic Slow/Stop In Traffic	0	0	PD	Darkness, Lighted Road
	0	201101434006	Animal	Dry Clear	11 / 09 / 11 20 :00	V1 V2	East	Normal	Passenger	Straight Ahead	0	0	PD	Darkness, Lighted Road
	0	201201011973	Rear End	Dry Clear	01 / 03 / 12 16 :00	V1 V2	East East	Normal Normal	Passenger Passenger	Straight Ahead Slow/Stop - Left Turn	0	0	PD	Daylight
	0	201201110607	Sideswipe Opposite Direction	Dry Clear	04 / 19 / 12 08 :00	V1 V2	East West	Normal Normal	Passenger Other Vehicle With Trailer	Straight Ahead Straight Ahead	0	0	PD	Daylight
	0	201201163483	Rear End	Dry Clear	06 / 06 / 12 13 :00	V1 V2	West West	Normal Normal	Passenger Passenger	Straight Ahead Slow/Stop - Left Turn	0	0	PD	Daylight
	0	201201163491	Turning		06 / 23 / 12 20 :00	V1 V2	Unknown Unknown	Other/Unknown Other/Unknown	Motorcycle (Over 150cc) Passenger	Straight Ahead Turning Left	0	1	A-Injury	
	0	201201163511	Fixed Object	Other Clear	06 / 14 / 12 14 :00	V1 V2	West	Normal	Passenger	Avoiding Vehicle/Objects	0	0	PD	Daylight
	0	201201180405	Overturned	Dry Clear	07 / 05 / 12 23 :00	V1 V2	North	Alcohol Impaired	Pickup	Diverging	0	1	B-Injury	Darkness
	0	201201336646	Fixed Object	Snow or Slush Snow	12 / 26 / 12 11 :00	V1 V2	South	Normal	Passenger	Straight Ahead	0	0	PD	Daylight

ILLINOIS DEPARTMENT OF TRANSPORTATION

GIS Crash Report Details: 2010-2015 Crashes

I-57 Herrin Rd to I-64

Route	Mile	Case ID#	Collision Type	Surface /Weather	Crash Date Time		Direction	Driver Condition	Vehicle Type	Maneuver Code	Fatal Count	Injury Count	Injury Type	Lighting
	0	201201363727	Rear End	Dry Clear	09 / 15 / 12 14 :00	V1 V2	West West	Normal Normal	Van/Mini-Van Passenger	Straight Ahead Straight Ahead	0	1	B-Injury	Daylight
	0	201201422942	Fixed Object	Dry Clear	12 / 08 / 12 17 :00	V1 V2	West	Normal	Passenger	Skidding/Control Loss	0	0	PD	Darkness
	0	201301055829	Animal	Dry Clear	01 / 23 / 13 21 :00	V1 V2	West	Normal	Passenger	Straight Ahead	0	0	PD	Darkness
	0	201301073661	Rear End	Wet Clear	03 / 29 / 13 04 :00	V1 V2	North North	Alcohol Impaired Normal	Passenger Tractor With Semi-Trailer	Straight Ahead Starting In Traffic	0	0	PD	Darkness
	0	201301105065	Rear End	Dry Clear	03 / 13 / 13 18 :00	V1 V2	East East	Normal Normal	Pickup Passenger	Straight Ahead Slow/Stop - Left Turn	0	0	PD	Daylight
	0	201301128030	Fixed Object	Dry Clear	05 / 24 / 13 06 :00	V1 V2	South	Normal	Passenger	Straight Ahead	0	0	PD	Daylight
	0	201301131074	Rear End	Dry Clear	05 / 12 / 13 11 :00	V1 V2	West West	Normal Normal	Pickup SUV	Straight Ahead Slow/Stop - Left Turn	0	1	B-Injury	Daylight
	0	201301131088	Rear End	Dry Clear	05 / 18 / 13 15 :00	V1 V2	West West	Normal Normal	Passenger Pickup	Straight Ahead Slow/Stop - Left Turn	0	0	PD	Daylight
	0	201301271452	Fixed Object	Dry Clear	08 / 08 / 13 23 :00	V1 V2	North	Normal	Tractor Without Semi-Trailer	Straight Ahead	0	0	PD	Darkness, Lighted Road
	0	201301342990	Fixed Object	Dry Clear	09 / 09 / 13 12 :00	V1 V2	North	Normal	Passenger	Straight Ahead	0	0	PD	Daylight
	0	201400032961	Parked Motor Vehicle	Wet Clear	02 / 18 / 14 22 :00	V1 V2	South Unknown	Normal	Tractor With Semi-Trailer Tractor With Semi-Trailer	Backing Parked	0	0	PD	Darkness, Lighted Road
	0	201400159405	Rear End	Dry Clear	03 / 18 / 14 13 :00	V1 V2	East East	Normal Normal	Pickup Pickup	Straight Ahead Slow/Stop In Traffic	0	0	PD	Daylight

ILLINOIS DEPARTMENT OF TRANSPORTATION

GIS Crash Report Details: 2010-2015 Crashes

I-57 Herrin Rd to I-64

Route	Mile	Case ID#	Collision Type	Surface /Weather	Crash Date Time		Direction	Driver Condition	Vehicle Type	Maneuver Code	Fatal Count	Injury Count	Injury Type	Lighting
	0	201400200363	Rear End	Dry Clear	07 / 15 / 14 14 :00	V1 V2	North North	Normal Normal	Passenger SUV	Straight Ahead Slow/Stop - Right Turn	0	0	PD	Daylight
	0	201400228269	Angle	Dry Clear	09 / 08 / 14 17 :00	V1 V2	South West	Normal Normal	Passenger Passenger	Straight Ahead Straight Ahead	0	0	PD	Daylight
	0	201400247625	Animal	Dry Clear	09 / 16 / 14 04 :00	V1 V2	South	Normal	Passenger	Straight Ahead	0	0	PD	Darkness
	0	201400262327	Sideswipe Same Direction	Wet Rain	10 / 15 / 14 18 :00	V1 V2	South South	Normal Normal	Tractor With Semi-Trailer Passenger	Changing Lanes Straight Ahead	0	0	PD	Darkness, Lighted Road
	0	201400281375	Angle	Dry Clear	06 / 19 / 14 17 :00	V1 V2	North West	Normal Normal	SUV Passenger	Straight Ahead Straight Ahead	0	6	A-Injury	Daylight
	0	201400282568	Animal	Dry Clear	10 / 17 / 14 02 :00	V1 V2	South	Normal	Passenger	Straight Ahead	0	0	PD	Darkness
	0	201400325835	Turning	Dry Clear	07 / 06 / 14 12 :00	V1 V2	East East	Normal Normal	Van/Mini-Van Passenger	U-Turn Straight Ahead	0	0	PD	Daylight
	0	201400373212	Head On	Wet Rain	08 / 16 / 14 13 :00	V1 V2	Northeast Southwest	Normal Normal	Passenger Passenger	Skidding/Control Loss Straight Ahead	0	3	A-Injury	Daylight
	0	201400376406	Animal	Dry Clear	11 / 22 / 14 20 :00	V1 V2	South	Normal	Passenger	Straight Ahead	0	0	PD	Darkness
	0	201400385301	Rear End	Dry Clear	09 / 03 / 14 15 :00	V1 V2	South South	Normal Normal	Passenger Passenger	Slow/Stop - Right Turn Slow/Stop - Right Turn	0	0	PD	Daylight
	0	201501024115	Overturned	Dry Clear	01 / 20 / 15 16 :00	V1 V2	Northeast	Normal	Tractor With Semi-Trailer	Straight Ahead	0	1	A-Injury	Daylight
	0	201501025779	Turning	Dry Severe Cross Wind	01 / 07 / 15 17 :00	V1 V2	North North	Normal Normal	Tractor With Semi-Trailer Passenger	Turning Right Slow/Stop - Right Turn	0	0	PD	Dawn
I 057	67.1	201001011254	Fixed Object	Snow or Slush Snow	01 / 07 / 10 09 :00	V1 V2	South	Normal	Passenger	Straight Ahead	0	0	PD	Daylight

ILLINOIS DEPARTMENT OF TRANSPORTATION

GIS Crash Report Details: 2010-2015 Crashes

I-57 Herrin Rd to I-64

Route	Mile	Case ID#	Collision Type	Surface /Weather	Crash Date Time		Direction	Driver Condition	Vehicle Type	Maneuver Code	Fatal Count	Injury Count	Injury Type	Lighting
I 057	62.04	201001012040	Sideswipe Same Direction	Snow or Slush Snow	01 / 07 / 10 23 :00	V1 V2	South South	Normal Other/Unknown	SUV Tractor With Semi-Trailer	Skidding/Control Loss Unknown	0	1	C-Injury	Darkness
I 057	60.16	201001012102	Fixed Object	Snow or Slush Snow	01 / 07 / 10 06 :00	V1 V2	North	Normal	Van/Mini-Van	Changing Lanes	0	0	PD	Dawn
I 057	58.95	201001014430	Sideswipe Same Direction	Dry Clear	01 / 09 / 10 15 :00	V1 V2	South South	Normal Normal	Passenger Passenger	Changing Lanes Avoiding Vehicle/Objects	0	1	C-Injury	Daylight
I 057	74.42	201001014436	Sideswipe Same Direction	Dry Clear	01 / 01 / 10 18 :00	V1 V2	South South	Drug Impaired Normal	Passenger Other	Straight Ahead Straight Ahead	0	0	PD	Darkness
I 057	85.6	201001014522	Rear End	Dry Clear	01 / 12 / 10 13 :00	V1 V2	South South	Normal Normal	Pickup Passenger	Straight Ahead Slow/Stop In Traffic	0	4	B-Injury	Daylight
I 057	67.1	201001017177	Sideswipe Same Direction	Wet Clear	01 / 21 / 10 16 :00	V1 V2	South South	Normal Normal	Passenger SUV	Passing/Overtaking Straight Ahead	0	0	PD	Daylight
I 057	59.1	201001020102	Fixed Object	Snow or Slush Snow	01 / 29 / 10 19 :00	V1 V2	South	Normal	Pickup	Straight Ahead	0	0	PD	Darkness
I 057	68.11	201001020114	Overturned	Snow or Slush Snow	01 / 29 / 10 20 :00	V1 V2	Southwest	Normal	SUV	Straight Ahead	0	0	PD	Darkness
I 057	70.1	201001021951	Animal	Wet Rain	02 / 05 / 10 05 :00	V1 V2	North	Normal	Pickup	Straight Ahead	0	0	PD	Darkness
I 057	89.64	201001022190	Fixed Object	Snow or Slush Snow	01 / 29 / 10 22 :00	V1 V2	South	Normal	Pickup	Straight Ahead	0	0	PD	Darkness
I 057	84.74	201001022773	Fixed Object	Wet Snow	02 / 06 / 10 07 :00	V1 V2	North	Normal	Passenger	Skidding/Control Loss	0	0	PD	Daylight
I 057	83.7	201001026327	Fixed Object	Snow or Slush Snow	02 / 15 / 10 04 :00	V1 V2	North	Normal	Passenger	Straight Ahead	0	0	PD	Darkness
I 057	63.55	201001026417	Sideswipe Same Direction	Dry Clear	02 / 12 / 10 16 :00	V1 V2	South South	Normal Normal	Tractor With Semi-Trailer Passenger	Passing/Overtaking Straight Ahead	0	0	PD	Daylight

ILLINOIS DEPARTMENT OF TRANSPORTATION

GIS Crash Report Details: 2010-2015 Crashes

I-57 Herrin Rd to I-64

Route	Mile	Case ID#	Collision Type	Surface /Weather	Crash Date Time		Direction	Driver Condition	Vehicle Type	Maneuver Code	Fatal Count	Injury Count	Injury Type	Lighting
I 057	78.6	201001026570	Overturned	Dry Clear	02 / 12 / 10 12 :00	V1 V2	South	Normal	Passenger	Passing/Overtaking	0	1	B-Injury	Daylight
I 057	76.6	201001027741	Rear End	Dry Clear	02 / 12 / 10 07 :00	V1 V2	South South	Fatigued Normal	Pickup Passenger	Straight Ahead Straight Ahead	0	0	PD	Daylight
I 057	85.6	201001027748	Overturned	Snow or Slush Snow	02 / 14 / 10 08 :00	V1 V2	North	Normal	Pickup	Passing/Overtaking	0	0	PD	Daylight
I 057	79.12	201001028446	Sideswipe Same Direction	Snow or Slush Snow	02 / 14 / 10 09 :00	V1 V2	North North	Normal Normal	Passenger Tractor With Semi-Trailer	Passing/Overtaking Straight Ahead	0	0	PD	Daylight
I 057	65.08	201001029879	Other Non-Collision	Dry Clear	02 / 20 / 10 04 :00	V1 V2	South	Other/Unknown	Passenger	Straight Ahead	0	3	C-Injury	Darkness
I 057	80.41	201001029902	Animal	Dry Clear	02 / 21 / 10 11 :00	V1 V2	North	Normal	SUV	Straight Ahead	0	0	PD	Daylight
I 057	85.9	201001030777	Animal	Dry Clear	02 / 24 / 10 18 :00	V1 V2	North	Normal	Passenger	Straight Ahead	0	0	PD	Darkness
I 057	68.11	201001036377	Overturned	Snow or Slush Snow	01 / 07 / 10 08 :00	V1 V2	North	Normal	Pickup	Skidding/Control Loss	0	2	B-Injury	Daylight
I 057	64.98	201001036491	Animal	Dry Clear	02 / 21 / 10 15 :00	V1 V2	North	Normal	Van/Mini-Van	Straight Ahead	0	0	PD	Daylight
I 057	79.6	201001038623	Fixed Object	Dry Clear	03 / 07 / 10 10 :00	V1 V2	North	Normal	Passenger	Avoiding Vehicle/Objects	0	0	PD	Daylight
I 057	83.71	201001039416	Animal	Dry Clear	03 / 07 / 10 21 :00	V1 V2	South	Normal	Passenger	Straight Ahead	0	0	PD	Darkness
I 057	71.14	201001042434	Sideswipe Same Direction	Dry Clear	03 / 10 / 10 15 :00	V1 V2	South South	Normal Normal	Passenger Tractor With Semi-Trailer	Merging Straight Ahead	0	0	PD	Daylight

ILLINOIS DEPARTMENT OF TRANSPORTATION

GIS Crash Report Details: 2010-2015 Crashes

I-57 Herrin Rd to I-64

Route	Mile	Case ID#	Collision Type	Surface /Weather	Crash Date Time		Direction	Driver Condition	Vehicle Type	Maneuver Code	Fatal Count	Injury Count	Injury Type	Lighting
I 057	72.01	201001046951	Pedestrian	Dry Clear	03 / 06 / 10 03 :00	V1 V2	N/A North	N/A Normal	N/A Passenger	N/A Straight Ahead	1	0	Fatal	Darkness
I 057	85.6	201001052948	Other Object	Dry Clear	03 / 17 / 10 22 :00	V1 V2	South	Normal	Passenger	Straight Ahead	0	0	PD	Darkness
I 057	85.6	201001052954	Other Object	Dry Clear	03 / 17 / 10 22 :00	V1 V2	South	Normal	Passenger	Straight Ahead	0	0	PD	Darkness
I 057	83.06	201001053402	Animal	Dry Clear	03 / 13 / 10 13 :00	V1 V2	South	Normal	Van/Mini-Van	Straight Ahead	0	0	PD	Daylight
I 057	79.1	201001053443	Sideswipe Same Direction	Wet Rain	03 / 13 / 10 16 :00	V1 V2	North North	Normal Normal	SUV SUV	Passing/Overtaking Straight Ahead	0	0	PD	Daylight
I 057	71.14	201001057561	Animal	Dry Clear	03 / 20 / 10 06 :00	V1 V2	North	Normal	Pickup	Straight Ahead	0	0	PD	Dawn
I 057	89.53	201001058099	Fixed Object	Wet Rain	03 / 21 / 10 14 :00	V1 V2	North	Normal	Passenger	Straight Ahead	0	0	PD	Daylight
I 057	65.08	201001064962	Overturned	Dry Clear	03 / 24 / 10 16 :00	V1 V2	North	Fatigued	Pickup	Passing/Overtaking	0	1	B-Injury	Daylight
I 057	77.58	201001070265	Fixed Object	Dry Clear	04 / 02 / 10 14 :00	V1 V2	South	Normal	Passenger	Straight Ahead	0	0	PD	Daylight
I 057	64.18	201001070268	Fixed Object	Dry Clear	04 / 02 / 10 13 :00	V1 V2	North	Asleep/Fainted	Passenger	Changing Lanes	0	1	A-Injury	Daylight
I 057	64.13	201001070371	Fixed Object	Dry Clear	03 / 30 / 10 18 :00	V1 V2	South	Normal	Tractor With Semi-Trailer	Straight Ahead	0	1	B-Injury	Daylight
I 057	91.98	201001084114	Fixed Object	Wet Rain	04 / 07 / 10 17 :00	V1 V2	North	Normal	Pickup	Straight Ahead	0	0	PD	Daylight
I 057	64.64	201001086249	Animal	Dry Clear	04 / 04 / 10 20 :00	V1 V2	North	Normal	Passenger	Straight Ahead	0	0	PD	Darkness

ILLINOIS DEPARTMENT OF TRANSPORTATION

GIS Crash Report Details: 2010-2015 Crashes

I-57 Herrin Rd to I-64

Route	Mile	Case ID#	Collision Type	Surface /Weather	Crash Date Time		Direction	Driver Condition	Vehicle Type	Maneuver Code	Fatal Count	Injury Count	Injury Type	Lighting
I 057	71.19	201001086781	Fixed Object	Dry Clear	04 / 17 / 10 01 :00	V1 V2	North	Fatigued	Tractor With Semi-Trailer	Unknown	0	1	A-Injury	Darkness
I 057	69.05	201001094537	Animal	Dry Clear	04 / 25 / 10 06 :00	V1 V2	North	Normal	SUV	Straight Ahead	0	0	PD	Daylight
I 057	61.63	201001096334	Animal	Wet Rain	04 / 25 / 10 17 :00	V1 V2	South	Normal	Passenger	Straight Ahead	0	0	PD	Daylight
I 057	71.34	201001101734	Fixed Object	Dry Clear	04 / 26 / 10 10 :00	V1 V2	North	Normal	Passenger	Changing Lanes	0	1	A-Injury	Daylight
I 057	73.58	201001105264	Animal	Dry Clear	04 / 27 / 10 20 :00	V1 V2	North	Normal	Passenger	Straight Ahead	0	0	PD	Darkness
I 057	88.59	201001108634	Fixed Object	Wet Rain	05 / 01 / 10 13 :00	V1 V2	North	Normal	Tractor With Semi-Trailer	Straight Ahead	0	0	PD	Daylight
I 057	64.13	201001109623	Fixed Object	Dry Clear	04 / 23 / 10 18 :00	V1 V2	N/A South	N/A Normal	N/A Passenger	N/A Passing/Overtaking	0	0	PD	Daylight
I 057	87.11	201001114063	Other Non-Collision	Dry Clear	05 / 03 / 10 15 :00	V1 V2	North North	Other/Unknown Normal	Passenger Tractor With Semi-Trailer	Skidding/Control Loss Straight Ahead	0	1	C-Injury	Daylight
I 057	67.1	201001120250	Fixed Object	Dry Clear	05 / 06 / 10 03 :00	V1 V2	North	Alcohol Impaired	Passenger	Other	0	1	A-Injury	Darkness
I 057	67.61	201001125704	Rear End	Dry Clear	05 / 06 / 10 13 :00	V1 V2	North North	Normal Normal	Pickup Passenger	Straight Ahead Other	0	0	PD	Daylight
I 057	71.14	201001128987	Other Object	Dry Clear	05 / 13 / 10 19 :00	V1 V2	North	Normal	Passenger	Avoiding Vehicle/Objects	0	2	B-Injury	Daylight
I 057	76.73	201001134646	Animal	Dry Clear	05 / 16 / 10 21 :00	V1 V2	North	Normal	Passenger	Straight Ahead	0	0	PD	Darkness
I 057	90.36	201001136478	Fixed Object	Snow or Slush Snow	02 / 14 / 10 19 :00	V1 V2	North	Normal	SUV	Skidding/Control Loss	0	1	A-Injury	Darkness

ILLINOIS DEPARTMENT OF TRANSPORTATION

GIS Crash Report Details: 2010-2015 Crashes

I-57 Herrin Rd to I-64

Route	Mile	Case ID#	Collision Type	Surface /Weather	Crash Date Time		Direction	Driver Condition	Vehicle Type	Maneuver Code	Fatal Count	Injury Count	Injury Type	Lighting
I 057	72.31	201001137161	Fixed Object	Dry Clear	05 / 25 / 10 03 :00	V1 V2	North	Asleep/Fainted	Tractor With Semi-Trailer	Straight Ahead	0	2	B-Injury	Darkness
I 057	65.39	201001138154	Other Object	Dry Clear	05 / 26 / 10 16 :00	V1 V2	North North	Normal Normal	Tractor Without Semi-Trailer SUV	Straight Ahead Straight Ahead	0	1	B-Injury	Daylight
I 057	61.1	201001145501	Rear End	Dry Clear	06 / 01 / 10 15 :00	V1 V2	North North	Normal Normal	Truck Single Unit Passenger	Straight Ahead Straight Ahead	0	0	PD	Daylight
I 057	68.11	201001146215	Turning	Dry Clear	05 / 29 / 10 17 :00	V1 V2	South South	Normal Normal	Passenger SUV	U-Turn Avoiding Vehicle/Objects	0	0	PD	Daylight
I 057	65.02	201001149873	Animal	Dry Clear	05 / 31 / 10 04 :00	V1 V2	North	Normal	Pickup	Straight Ahead	0	0	PD	Darkness
I 057	72.09	201001149883	Animal	Dry Clear	05 / 31 / 10 05 :00	V1 V2	South	Normal	Tractor With Semi-Trailer	Straight Ahead	0	0	PD	Dawn
I 057	60.08	201001158055	Fixed Object	Dry Clear	06 / 03 / 10 18 :00	V1 V2	North	Normal	Passenger	Straight Ahead	0	0	PD	Daylight
I 057	86.1	201001158070	Overturned	Dry Clear	06 / 05 / 10 05 :00	V1 V2	South	Asleep/Fainted	Passenger	Straight Ahead	0	1	A-Injury	Dawn
I 057	90.11	201001158864	Fixed Object	Wet Rain	03 / 09 / 10 08 :00	V1 V2	North	Normal	Passenger	Straight Ahead	0	0	PD	Daylight
I 057	91.98	201001158890	Animal	Dry Clear	03 / 07 / 10 03 :00	V1 V2	Northeast	Normal	Passenger	Straight Ahead	0	0	PD	Darkness
I 057	59.57	201001161776	Rear End	Dry Clear	06 / 07 / 10 16 :00	V1 V2	North North	Normal Normal	Passenger SUV	Slow/Stop In Traffic Slow/Stop In Traffic	0	3	B-Injury	Daylight
I 057	80.01	201001161778	Fixed Object	Dry Clear	06 / 13 / 10 16 :00	V1 V2	North	Normal	Passenger	Skidding/Control Loss	0	0	PD	Daylight
I 057	65.93	201001165867	Fixed Object	Wet Rain	06 / 17 / 10 11 :00	V1 V2	South	Normal	SUV	Straight Ahead	0	0	PD	Daylight

ILLINOIS DEPARTMENT OF TRANSPORTATION

GIS Crash Report Details: 2010-2015 Crashes

I-57 Herrin Rd to I-64

Route	Mile	Case ID#	Collision Type	Surface /Weather	Crash Date Time		Direction	Driver Condition	Vehicle Type	Maneuver Code	Fatal Count	Injury Count	Injury Type	Lighting
I 057	61.1	201001169964	Rear End	Dry Clear	06 / 13 / 10 17 :00	V1 V2	North North	Other/Unknown Other/Unknown	Tractor With Semi-Trailer Van/Mini-Van	Straight Ahead Slow/Stop In Traffic	0	6	A-Injury	Daylight
I 057	83.07	201001171942	Sideswipe Same Direction	Dry Clear	06 / 20 / 10 10 :00	V1 V2	South South	Normal Normal	Passenger Passenger	Changing Lanes Straight Ahead	0	0	PD	Daylight
I 057	65.08	201001173005	Rear End	Dry Clear	06 / 22 / 10 10 :00	V1 V2	North North	Normal Normal	Tractor With Semi-Trailer Truck Single Unit	Slow/Stop In Traffic Straight Ahead	0	0	PD	Daylight
I 057	59.09	201001175631	Other Object	Clear	05 / 07 / 10 18 :00	V1 V2	North	Normal	Passenger	Straight Ahead	0	0	PD	Daylight
I 057	65.08	201001176941	Overturned	Dry Clear	06 / 23 / 10 23 :00	V1 V2	South	Normal	Tractor With Semi-Trailer	Straight Ahead	0	1	C-Injury	Darkness
I 057	60.49	201001185626	Animal	Dry Clear	07 / 02 / 10 22 :00	V1 V2	North	Normal	Passenger	Straight Ahead	0	0	PD	Darkness
I 057	63.11	201001189017	Animal	Dry Clear	07 / 06 / 10 03 :00	V1 V2	South	Normal	SUV	Straight Ahead	0	0	PD	Darkness
I 057	66.23	201001189035	Fixed Object	Dry Clear	07 / 03 / 10 02 :00	V1 V2	North	Alcohol Impaired	SUV	Passing/Overtaking	0	0	PD	Darkness
I 057	89.17	201001190159	Overturned	Dry Clear	06 / 30 / 10 18 :00	V1 V2	South	Normal	Van/Mini-Van	Straight Ahead	0	5	A-Injury	Daylight
I 057	80.11	201001190848	Fixed Object	Dry Clear	07 / 02 / 10 15 :00	V1 V2	North	Alcohol Impaired	Passenger	Straight Ahead	0	0	PD	Daylight
I 057	70.62	201001191468	Fixed Object	Dry Clear	04 / 23 / 10 07 :00	V1 V2	North	Normal	Passenger	Straight Ahead	0	2	B-Injury	Daylight
I 057	65.33	201001191986	Rear End	Dry Clear	07 / 07 / 10 11 :00	V1 V2	North North	Normal Normal	Passenger Tractor With Semi-Trailer	Changing Lanes Straight Ahead	0	0	PD	Daylight
I 057	85.08	201001193314	Other Non-Collision	Dry Clear	07 / 03 / 10 13 :00	V1 V2	North	Normal	Pickup	Straight Ahead	0	0	PD	Daylight

ILLINOIS DEPARTMENT OF TRANSPORTATION

GIS Crash Report Details: 2010-2015 Crashes

I-57 Herrin Rd to I-64

Route	Mile	Case ID#	Collision Type	Surface /Weather	Crash Date Time		Direction	Driver Condition	Vehicle Type	Maneuver Code	Fatal Count	Injury Count	Injury Type	Lighting
I 057	64.84	201001193591	Sideswipe Same Direction	Dry Clear	07 / 06 / 10 10 :00	V1 V2	North North	Normal Normal	Passenger Tractor With Semi-Trailer	Changing Lanes Straight Ahead	0	0	PD	Daylight
I 057	70.93	201001197512	Rear End	Dry Clear	07 / 10 / 10 15 :00	V1 V2	North North	Normal Normal	Passenger Passenger	Straight Ahead Straight Ahead	0	0	PD	Daylight
I 057	84.46	201001201740	Animal	Dry Clear	07 / 13 / 10 00 :00	V1 V2	South	Normal	Tractor With Semi-Trailer	Straight Ahead	0	0	PD	Darkness
I 057	74.26	201001202262	Overturned	Dry Clear	07 / 16 / 10 05 :00	V1 V2	North	Normal	Tractor With Semi-Trailer	Merging	0	0	PD	Dawn
I 057	66.4	201001202316	Rear End	Dry Clear	07 / 17 / 10 14 :00	V1 V2	North North	Normal Normal	Van/Mini-Van Passenger	Straight Ahead Slow/Stop In Traffic	0	0	PD	Daylight
I 057	63.63	201001202331	Rear End	Dry Clear	07 / 17 / 10 12 :00	V1 V2	North North	Normal Normal	Passenger Passenger	Straight Ahead Straight Ahead	0	0	PD	Daylight
I 057	65.08	201001202332	Sideswipe Same Direction	Dry Clear	07 / 17 / 10 14 :00	V1 V2	North North	Normal Normal	Truck Single Unit Passenger	Changing Lanes Changing Lanes	0	0	PD	Daylight
I 057	87	201001209548	Overturned	Dry Clear	07 / 24 / 10 10 :00	V1 V2	N/A North	N/A Normal	N/A Motorcycle (Over 150cc)	N/A Straight Ahead	0	1	A-Injury	Daylight
I 057	62.74	201001209552	Overturned	Dry Clear	07 / 19 / 10 14 :00	V1 V2	North	Normal	Van/Mini-Van	Skidding/Control Loss	0	4	A-Injury	Daylight
I 057	72.09	201001209553	Sideswipe Same Direction	Dry Clear	07 / 22 / 10 11 :00	V1 V2	South South	Normal Normal	Tractor With Semi-Trailer Passenger	Starting In Traffic Straight Ahead	0	0	PD	Daylight
I 057	65.88	201001212584	Rear End	Dry Clear	07 / 15 / 10 14 :00	V1 V2	North North	Normal Drug Impaired	Tractor With Semi-Trailer Tractor With Semi-Trailer	Straight Ahead Straight Ahead	2	2	Fatal	Daylight
I 057	69.31	201001215597	Rear End	Dry Clear	07 / 26 / 10 17 :00	V1 V2	South South	Normal Normal	Passenger Pickup	Straight Ahead Slow/Stop In Traffic	0	0	PD	Daylight

ILLINOIS DEPARTMENT OF TRANSPORTATION

GIS Crash Report Details: 2010-2015 Crashes

I-57 Herrin Rd to I-64

Route	Mile	Case ID#	Collision Type	Surface /Weather	Crash Date Time		Direction	Driver Condition	Vehicle Type	Maneuver Code	Fatal Count	Injury Count	Injury Type	Lighting
I 057	84.25	201001218149	Sideswipe Same Direction	Dry Clear	07 / 28 / 10 09 :00	V1 V2	North North	Other/Unknown Normal	Tractor With Semi-Trailer Tractor With Semi-Trailer	Unknown Straight Ahead	0	0	PD	Daylight
I 057	76.11	201001218182	Sideswipe Same Direction	Dry Clear	07 / 29 / 10 13 :00	V1 V2	North North	Normal Normal	Other Vehicle With Trailer SUV	Changing Lanes Straight Ahead	0	0	PD	Daylight
I 057	85.6	201001218960	Overturned	Dry Clear	08 / 01 / 10 11 :00	V1 V2	South	Normal	SUV	Changing Lanes	0	0	PD	Daylight
I 057	75.11	201001219510	Sideswipe Same Direction	Dry Clear	07 / 21 / 10 08 :00	V1 V2	North North	Normal Normal	Passenger Tractor With Semi-Trailer	Changing Lanes Straight Ahead	0	0	PD	Daylight
I 057	71.82	201001219609	Rear End	Dry Clear	07 / 30 / 10 14 :00	V1 V2	North North	Normal Normal	Passenger Passenger	Straight Ahead Slow/Stop In Traffic	0	0	PD	Daylight
I 057	73.11	201001222504	Rear End	Dry Clear	08 / 01 / 10 16 :00	V1 V2	South South	Normal Normal	Pickup Tractor With Semi-Trailer	Slow/Stop In Traffic Slow/Stop In Traffic	0	2	B-Injury	Daylight
I 057	65.08	201001223108	Angle	Dry Clear	08 / 02 / 10 06 :00	V1 V2	Unknown North	Normal Normal	Other Van/Mini-Van	Unknown Straight Ahead	0	0	PD	Daylight
I 057	65.08	201001229253	Sideswipe Same Direction	Dry Clear	08 / 04 / 10 15 :00	V1 V2	North North	Normal Normal	Passenger Tractor With Semi-Trailer	Straight Ahead Straight Ahead	0	1	B-Injury	Daylight
I 057	65.09	201001231692	Rear End	Dry Clear	08 / 09 / 10 11 :00	V1 V2	South South	Normal Normal	Passenger SUV	Straight Ahead Slow/Stop In Traffic	0	0	PD	Daylight
I 057	74.12	201001232274	Sideswipe Same Direction	Dry Clear	07 / 22 / 10 16 :00	V1 V2	South South	Normal Normal	Pickup Passenger	Skidding/Control Loss Slow/Stop In Traffic	0	0	PD	Daylight
I 057	65.09	201001234561	Rear End	Dry Clear	08 / 09 / 10 11 :00	V1 V2	South South	Normal Normal	SUV Passenger	Straight Ahead Other	0	0	PD	Daylight
I 057	82.81	201001236985	Fixed Object	Wet Clear	08 / 12 / 10 18 :00	V1 V2	North	Normal	Passenger	Straight Ahead	0	0	PD	Daylight

ILLINOIS DEPARTMENT OF TRANSPORTATION

GIS Crash Report Details: 2010-2015 Crashes

I-57 Herrin Rd to I-64

Route	Mile	Case ID#	Collision Type	Surface /Weather	Crash Date Time		Direction	Driver Condition	Vehicle Type	Maneuver Code	Fatal Count	Injury Count	Injury Type	Lighting
I 057	78.93	201001239287	Overturned	Wet Severe Cross Wind	08 / 15 / 10 05 :00	V1 V2	South	Normal	Motor Driven Cycle	Straight Ahead	0	2	A-Injury	Dawn
I 057	91.26	201001244545	Sideswipe Same Direction	Dry Clear	08 / 19 / 10 10 :00	V1 V2	North North	Normal Normal	Passenger Pickup	Avoiding Vehicle/Objects Other	0	0	PD	Daylight
I 057	67.5	201001244561	Rear End	Dry Clear	08 / 18 / 10 11 :00	V1 V2	South South	Normal Normal	SUV Van/Mini-Van	Straight Ahead Slow/Stop In Traffic	0	6	A-Injury	Daylight
I 057	62.61	201001244685	Rear End	Dry Clear	08 / 12 / 10 11 :00	V1 V2	South South	Fatigued Normal	Tractor With Semi-Trailer Pickup	Straight Ahead Slow/Stop In Traffic	0	3	A-Injury	Daylight
I 057	65.08	201001245575	Rear End	Dry Clear	08 / 19 / 10 14 :00	V1 V2	South South	Normal Normal	Pickup Other	Straight Ahead Slow/Stop In Traffic	0	0	PD	Daylight
I 057	89.11	201001246689	Overturned	Wet Rain	05 / 01 / 10 13 :00	V1 V2	North	Normal	Motorcycle (Over 150cc)	Straight Ahead	0	1	B-Injury	Daylight
I 057	86.1	201001246984	Sideswipe Same Direction	Dry Clear	08 / 18 / 10 12 :00	V1 V2	South South	Normal Normal	Passenger Van/Mini-Van	Changing Lanes Straight Ahead	0	0	PD	Daylight
I 057	64.19	201001246985	Other Object	Dry Clear	08 / 18 / 10 13 :00	V1 V2	North	Normal	Tractor With Semi-Trailer	Straight Ahead	0	0	PD	Daylight
I 057	82.96	201001250136	Animal	Dry Clear	07 / 03 / 10 00 :00	V1 V2	South	Other/Unknown	Passenger	Straight Ahead	0	0	PD	Darkness
I 057	65.08	201001252639	Rear End	Dry Clear	08 / 23 / 10 11 :00	V1 V2	North North	Normal Normal	Passenger Pickup	Straight Ahead Straight Ahead	0	0	PD	Daylight
I 057	61.1	201001254236	Fixed Object	Dry Clear	08 / 18 / 10 17 :00	V1 V2	South	Normal	Passenger	Straight Ahead	0	0	PD	Daylight
I 057	72.08	201001256801	Rear End	Dry Clear	08 / 24 / 10 13 :00	V1 V2	North North	Other/Unknown Normal	Tractor With Semi-Trailer Passenger	Changing Lanes Straight Ahead	0	0	PD	Daylight
I 057	83.07	201001256952	Animal	Dry Clear	08 / 22 / 10 23 :00	V1 V2	South	Normal	Other	Straight Ahead	0	0	PD	Darkness

ILLINOIS DEPARTMENT OF TRANSPORTATION

GIS Crash Report Details: 2010-2015 Crashes

I-57 Herrin Rd to I-64

Route	Mile	Case ID#	Collision Type	Surface /Weather	Crash Date Time		Direction	Driver Condition	Vehicle Type	Maneuver Code	Fatal Count	Injury Count	Injury Type	Lighting
I 057	64.54	201001257924	Rear End	Dry Clear	08 / 25 / 10 16 :00	V1 V2	North North	Normal Normal	Tractor With Semi-Trailer Tractor With Semi-Trailer	Straight Ahead Slow/Stop In Traffic	0	0	PD	Daylight
I 057	82.87	201001264301	Other Object	Dry Clear	08 / 26 / 10 08 :00	V1 V2	North	Normal	Passenger	Passing/Overtaking	0	0	PD	Daylight
I 057	86.1	201001266227	Rear End	Dry Clear	09 / 02 / 10 16 :00	V1 V2	South South	Normal Normal	Tractor With Semi-Trailer Other Vehicle With Trailer	Straight Ahead Straight Ahead	0	0	PD	Daylight
I 057	66.09	201001270370	Rear End	Dry Clear	09 / 08 / 10 06 :00	V1 V2	South South	Asleep/Fainted Other/Unknown	Pickup Truck Single Unit	Straight Ahead Slow/Stop In Traffic	0	0	PD	Dawn
I 057	64.12	201001276696	Overturned	Dry Clear	09 / 02 / 10 14 :00	V1 V2	North	Normal	Other Vehicle With Trailer	Straight Ahead	0	1	A-Injury	Daylight
I 057	77.31	201001280387	Rear End	Dry Clear	09 / 11 / 10 11 :00	V1 V2	North North	Normal Normal	Pickup Passenger	Straight Ahead Straight Ahead	0	2	B-Injury	Daylight
I 057	61.1	201001282322	Rear End	Dry Clear	09 / 07 / 10 15 :00	V1 V2	South South	Normal Normal	Passenger Passenger	Passing/Overtaking Slow/Stop In Traffic	0	0	PD	Daylight
I 057	80.11	201001283159	Rear End	Dry Clear	09 / 17 / 10 15 :00	V1 V2	North North	Normal Normal	Passenger Tractor With Semi-Trailer	Straight Ahead Slow/Stop In Traffic	0	0	PD	Daylight
I 057	76.51	201001283294	Fixed Object	Dry Clear	09 / 14 / 10 14 :00	V1 V2	South South	Normal Normal	Truck Single Unit Tractor With Semi-Trailer	Straight Ahead Straight Ahead	0	0	PD	Daylight
I 057	79.61	201001286529	Fixed Object	Dry Clear	09 / 22 / 10 06 :00	V1 V2	South	Fatigued	Passenger	Skidding/Control Loss	0	0	PD	Dawn
I 057	70.88	201001292846	Rear End	Dry Clear	07 / 29 / 10 13 :00	V1 V2	South South	Normal Normal	SUV Passenger	Straight Ahead Slow/Stop In Traffic	0	3	C-Injury	Daylight
I 057	73.64	201001292863	Sideswipe Same Direction	Clear	07 / 29 / 10 15 :00	V1 V2	South South	Normal Normal	Passenger Tractor With Semi-Trailer	Merging Straight Ahead	0	0	PD	Daylight

ILLINOIS DEPARTMENT OF TRANSPORTATION

GIS Crash Report Details: 2010-2015 Crashes

I-57 Herrin Rd to I-64

Route	Mile	Case ID#	Collision Type	Surface /Weather	Crash Date Time		Direction	Driver Condition	Vehicle Type	Maneuver Code	Fatal Count	Injury Count	Injury Type	Lighting
I 057	85.06	201001293595	Sideswipe Same Direction	Dry Clear	09 / 24 / 10 13 :00	V1 V2	North North	Normal Normal	Passenger Tractor With Semi-Trailer	Passing/Overtaking Straight Ahead	0	0	PD	Daylight
I 057	83.29	201001293607	Sideswipe Same Direction	Dry Clear	09 / 24 / 10 15 :00	V1 V2	North North	Normal Normal	SUV Tractor With Semi-Trailer	Merging Straight Ahead	0	0	PD	Daylight
I 057	79.1	201001295882	Fixed Object	Dry Clear	09 / 28 / 10 00 :00	V1 V2	South	Asleep/Fainted	Passenger	Straight Ahead	0	1	B-Injury	Darkness
I 057	64.13	201001295891	Animal	Dry Clear	09 / 28 / 10 00 :00	V1 V2	North	Normal	Passenger	Straight Ahead	0	0	PD	Darkness
I 057	61.1	201001295920	Overturned	Dry Clear	09 / 22 / 10 03 :00	V1 V2	North	Asleep/Fainted	Passenger	Straight Ahead	0	0	PD	Darkness
I 057	61.1	201001295929	Animal	Dry Clear	09 / 28 / 10 03 :00	V1 V2	North	Normal	Passenger	Straight Ahead	0	0	PD	Darkness
I 057	69.28	201001299595	Other Object	Dry Clear	09 / 27 / 10 10 :00	V1 V2	South	Normal	Van/Mini-Van	Straight Ahead	0	0	PD	Daylight
I 057	59.88	201001304489	Animal	Dry Clear	10 / 03 / 10 21 :00	V1 V2	North	Normal	SUV	Straight Ahead	0	0	PD	Darkness
I 057	73.22	201001305131	Animal	Dry Clear	09 / 24 / 10 07 :00	V1 V2	South South	Normal Normal	Motorcycle (Over 150cc) Tractor With Semi-Trailer	Straight Ahead Straight Ahead	1	1	Fatal	Daylight
I 057	80.11	201001305776	Animal	Dry Clear	10 / 05 / 10 05 :00	V1 V2	South	Normal	Pickup	Straight Ahead	0	0	PD	Darkness
I 057	87.11	201001309899	Animal	Dry Clear	10 / 07 / 10 05 :00	V1 V2	South	Normal	Van/Mini-Van	Straight Ahead	0	0	PD	Darkness
I 057	61.53	201001311237	Other Non-Collision	Dry Clear	10 / 04 / 10 13 :00	V1 V2	South	Other/Unknown	Van/Mini-Van	Straight Ahead	0	1	B-Injury	Daylight

ILLINOIS DEPARTMENT OF TRANSPORTATION

GIS Crash Report Details: 2010-2015 Crashes

I-57 Herrin Rd to I-64

Route	Mile	Case ID#	Collision Type	Surface /Weather	Crash Date Time		Direction	Driver Condition	Vehicle Type	Maneuver Code	Fatal Count	Injury Count	Injury Type	Lighting
I 057	69.38	201001311238	Rear End	Dry Clear	10 / 08 / 10 15 :00	V1 V2	North North	Normal Normal	Van/Mini-Van Pickup	Straight Ahead Straight Ahead	0	0	PD	Daylight
I 057	71.6	201001311239	Animal	Dry Clear	10 / 03 / 10 09 :00	V1 V2	South	Normal	Passenger	Straight Ahead	0	0	PD	Daylight
I 057	70.1	201001311242	Sideswipe Same Direction	Wet Rain	09 / 26 / 10 13 :00	V1 V2	South South	Normal Normal	Tractor With Semi-Trailer Passenger	Changing Lanes Straight Ahead	0	0	PD	Daylight
I 057	79.05	201001311245	Fixed Object	Dry Clear	09 / 17 / 10 14 :00	V1 V2	North	Normal	Tractor With Semi-Trailer	Avoiding Vehicle/Objects	0	0	PD	Daylight
I 057	65.91	201001311585	Rear End	Dry Clear	10 / 10 / 10 16 :00	V1 V2	North North	Normal Normal	Pickup Pickup	Straight Ahead Straight Ahead	0	0	PD	Daylight
I 057	69.92	201001311597	Animal	Dry Clear	10 / 04 / 10 22 :00	V1 V2	North	Normal	Tractor With Semi-Trailer	Straight Ahead	0	0	PD	Darkness
I 057	84.07	201001315227	Rear End	Dry Clear	10 / 01 / 10 15 :00	V1 V2	North North	Normal Normal	Passenger SUV	Straight Ahead Straight Ahead	0	0	PD	Daylight
I 057	89.11	201001315247	Animal	Dry Clear	09 / 29 / 10 20 :00	V1 V2	North	Normal	Tractor With Semi-Trailer	Straight Ahead	0	0	PD	Darkness
I 057	80.88	201001319259	Sideswipe Same Direction	Dry Clear	10 / 10 / 10 22 :00	V1 V2	North North	Normal Normal	Tractor With Semi-Trailer Passenger	Straight Ahead Straight Ahead	0	0	PD	Darkness
I 057	82.86	201001319276	Overturned	Dry Clear	10 / 11 / 10 22 :00	V1 V2	North	Normal	Tractor With Semi-Trailer	Straight Ahead	0	1	A-Injury	Darkness
I 057	71.13	201001321458	Sideswipe Same Direction	Dry Clear	10 / 17 / 10 19 :00	V1 V2	Unknown South	Other/Unknown Other/Unknown	Unknown Passenger	Unknown Straight Ahead	0	0	PD	Dawn
I 057	88.11	201001324169	Parked Motor Vehicle	Dry Clear	08 / 12 / 10 19 :00	V1 V2	South South	Normal	Motorcycle (Over 150cc) Passenger	Slow/Stop In Traffic Parked	0	0	PD	Dusk
I 057	69.35	201001327434	Fixed Object	Dry Clear	10 / 08 / 10 11 :00	V1 V2	North	Normal	Tractor With Semi-Trailer	Changing Lanes	0	0	PD	Daylight

ILLINOIS DEPARTMENT OF TRANSPORTATION

GIS Crash Report Details: 2010-2015 Crashes

I-57 Herrin Rd to I-64

Route	Mile	Case ID#	Collision Type	Surface /Weather	Crash Date Time		Direction	Driver Condition	Vehicle Type	Maneuver Code	Fatal Count	Injury Count	Injury Type	Lighting
I 057	84.58	201001327502	Animal	Dry Clear	10 / 18 / 10 01 :00	V1 V2	South	Normal	Van/Mini-Van	Straight Ahead	0	0	PD	Darkness
I 057	88.88	201001329046	Other Non-Collision	Dry Clear	10 / 22 / 10 10 :00	V1 V2	North North	Normal Normal	Tractor With Semi-Trailer Passenger	Straight Ahead Avoiding Vehicle/Objects	0	0	PD	Daylight
I 057	88.11	201001329049	Animal	Dry Clear	10 / 22 / 10 06 :00	V1 V2	South	Normal	Tractor With Semi-Trailer	Straight Ahead	0	0	PD	Dawn
I 057	91.23	201001331353	Animal	Dry Clear	10 / 25 / 10 00 :00	V1 V2	North	Normal	Truck Single Unit	Straight Ahead	0	0	PD	Darkness
I 057	66.1	201001333537	Animal	Dry Clear	10 / 17 / 10 22 :00	V1 V2	South	Normal	Van/Mini-Van	Straight Ahead	0	0	PD	Darkness
I 057	65.36	201001342303	Other Object	Dry Clear	10 / 28 / 10 12 :00	V1 V2	South	Other/Unknown	Tractor With Semi-Trailer	Unknown	0	0	PD	Daylight
I 057	65.09	201001344329	Fixed Object	Dry Clear	11 / 04 / 10 11 :00	V1 V2	North	Normal	Passenger	Straight Ahead	0	0	PD	Daylight
I 057	63.11	201001344458	Animal	Wet Clear	11 / 03 / 10 06 :00	V1 V2	South	Normal	Passenger	Straight Ahead	0	1	B-Injury	Dawn
I 057	73.11	201001345421	Rear End	Dry Clear	10 / 10 / 10 23 :00	V1 V2	North North	Normal Normal	Passenger Tractor With Semi-Trailer	Straight Ahead Starting In Traffic	0	0	PD	Darkness
I 057	64.48	201001346288	Sideswipe Same Direction	Dry Clear	11 / 05 / 10 11 :00	V1 V2	North North	Normal Normal	Tractor With Semi-Trailer Passenger	Changing Lanes Straight Ahead	0	0	PD	Daylight
I 057	69.11	201001346588	Rear End	Dry Clear	10 / 12 / 10 17 :00	V1 V2	North North	Normal Normal	SUV SUV	Straight Ahead Straight Ahead	0	0	PD	Daylight
I 057	66.09	201001346605	Fixed Object	Dry Clear	10 / 19 / 10 18 :00	V1 V2	North	Normal	Tractor With Semi-Trailer	Avoiding Vehicle/Objects	0	0	PD	Darkness
I 057	67.49	201001346638	Animal	Dry Clear	11 / 05 / 10 01 :00	V1 V2	South	Normal	Pickup	Straight Ahead	0	0	PD	Darkness

ILLINOIS DEPARTMENT OF TRANSPORTATION

GIS Crash Report Details: 2010-2015 Crashes

I-57 Herrin Rd to I-64

Route	Mile	Case ID#	Collision Type	Surface /Weather	Crash Date Time		Direction	Driver Condition	Vehicle Type	Maneuver Code	Fatal Count	Injury Count	Injury Type	Lighting
I 057	62.07	201001346714	Animal	Dry Clear	10 / 23 / 10 22 :00	V1 V2	North	Normal	Passenger	Straight Ahead	0	0	PD	Darkness
I 057	84.08	201001346926	Other Non-Collision	Dry Clear	10 / 29 / 10 23 :00	V1 V2	North	Normal	Pickup	Avoiding Vehicle/Objects	0	0	PD	Darkness
I 057	71.81	201001347327	Animal	Dry Clear	11 / 01 / 10 21 :00	V1 V2	South	Normal	Passenger	Straight Ahead	0	0	PD	Darkness
I 057	82.18	201001347330	Animal	Dry Clear	11 / 06 / 10 02 :00	V1 V2	North	Normal	Passenger	Straight Ahead	0	2	B-Injury	Darkness
I 057	90.01	201001347341	Other Object	Dry Clear	11 / 07 / 10 12 :00	V1 V2	South South	Normal Normal	Tractor With Semi-Trailer Passenger	Straight Ahead Straight Ahead	0	0	PD	Daylight
I 057	67.1	201001347359	Overturned	Dry Clear	11 / 07 / 10 20 :00	V1 V2	South	Normal	Passenger	Avoiding Vehicle/Objects	0	2	B-Injury	Darkness
I 057	91.26	201001349465	Animal	Dry Clear	11 / 06 / 10 20 :00	V1 V2	South	Normal	Passenger	Straight Ahead	0	0	PD	Darkness
I 057	73.11	201001349476	Overturned	Dry Clear	11 / 07 / 10 18 :00	V1 V2	North	Normal	Tractor With Semi-Trailer	Changing Lanes	0	0	PD	Darkness
I 057	74.82	201001349934	Animal	Dry Clear	11 / 08 / 10 05 :00	V1 V2	South	Normal	Pickup	Straight Ahead	0	0	PD	Darkness
I 057	64.13	201001351540	Animal	Dry Clear	10 / 22 / 10 02 :00	V1 V2	North	Normal	Passenger	Straight Ahead	0	0	PD	Darkness
I 057	85.09	201001354436	Animal	Dry Clear	11 / 10 / 10 22 :00	V1 V2	South	Normal	Passenger	Straight Ahead	0	0	PD	Darkness
I 057	68.9	201001354458	Sideswipe Same Direction	Dry Clear	11 / 12 / 10 15 :00	V1 V2	North North	Normal Normal	Pickup SUV	Passing/Overtaking Straight Ahead	0	0	PD	Daylight
I 057	83.06	201001356068	Rear End	Dry Clear	09 / 12 / 10 15 :00	V1 V2	South South	Normal Normal	Passenger Pickup	Passing/Overtaking Straight Ahead	0	0	PD	Daylight

ILLINOIS DEPARTMENT OF TRANSPORTATION

GIS Crash Report Details: 2010-2015 Crashes

I-57 Herrin Rd to I-64

Route	Mile	Case ID#	Collision Type	Surface /Weather	Crash Date Time		Direction	Driver Condition	Vehicle Type	Maneuver Code	Fatal Count	Injury Count	Injury Type	Lighting
I 057	84.39	201001357058	Animal	Dry Clear	11 / 10 / 10 20 :00	V1 V2	South	Normal	Passenger	Straight Ahead	0	0	PD	Darkness
I 057	68.36	201001357172	Sideswipe Same Direction	Dry Clear	10 / 29 / 10 13 :00	V1 V2	North Unknown	Normal Other/Unknown	Passenger Unknown	Straight Ahead Unknown	0	0	PD	Daylight
I 057	85.6	201001357183	Animal	Dry Clear	11 / 13 / 10 19 :00	V1 V2	South	Normal	Van/Mini-Van	Straight Ahead	0	0	PD	Darkness
I 057	72.61	201001363396	Animal	Dry Clear	10 / 17 / 10 01 :00	V1 V2	South	Normal	Passenger	Straight Ahead	0	0	PD	Darkness
I 057	85.34	201001367113	Animal	Dry Clear	11 / 22 / 10 02 :00	V1 V2	South	Normal	Van/Mini-Van	Straight Ahead	0	0	PD	Darkness
I 057	64.49	201001371256	Animal	Dry Clear	11 / 17 / 10 21 :00	V1 V2	South	Normal	Passenger	Straight Ahead	0	0	PD	Darkness
I 057	70.1	201001371303	Animal	Dry Clear	11 / 15 / 10 17 :00	V1 V2	South	Normal	Passenger	Changing Lanes	0	1	C-Injury	Darkness
I 057	64.14	201001371312	Animal	Dry Clear	11 / 17 / 10 19 :00	V1 V2	South	Normal	Passenger	Straight Ahead	0	0	PD	Darkness
I 057	73.11	201001371764	Animal	Dry Clear	11 / 22 / 10 17 :00	V1 V2	North	Normal	Pickup	Straight Ahead	0	0	PD	Darkness
I 057	74.14	201001371827	Animal	Dry Clear	11 / 19 / 10 23 :00	V1 V2	South	Normal	Passenger	Straight Ahead	0	0	PD	Darkness
I 057	76.49	201001371837	Animal	Dry Clear	11 / 21 / 10 20 :00	V1 V2	South	Normal	Truck Single Unit	Straight Ahead	0	0	PD	Darkness
I 057	63.11	201001371838	Sideswipe Same Direction	Dry Clear	11 / 20 / 10 17 :00	V1 V2	South South	Normal Normal	Tractor With Semi-Trailer SUV	Changing Lanes Straight Ahead	0	0	PD	Darkness
I 057	72.4	201001372176	Rear End	Dry Clear	11 / 28 / 10 17 :00	V1 V2	North North	Normal Normal	Pickup SUV	Straight Ahead Straight Ahead	0	0	PD	Darkness

ILLINOIS DEPARTMENT OF TRANSPORTATION

GIS Crash Report Details: 2010-2015 Crashes

I-57 Herrin Rd to I-64

Route	Mile	Case ID#	Collision Type	Surface /Weather	Crash Date Time		Direction	Driver Condition	Vehicle Type	Maneuver Code	Fatal Count	Injury Count	Injury Type	Lighting
I 057	62.2	201001372799	Animal	Dry Clear	10 / 13 / 10 06 :00	V1 V2	South	Other/Unknown	Passenger	Straight Ahead	0	0	PD	Dawn
I 057	77.12	201001376959	Overturned	Dry Clear	11 / 28 / 10 12 :00	V1 V2	North	Normal	Passenger	Straight Ahead	0	1	A-Injury	Daylight
I 057	77.12	201001377030	Animal	Dry Clear	11 / 27 / 10 05 :00	V1 V2	North	Normal	Tractor With Semi-Trailer	Straight Ahead	0	0	PD	Darkness
I 057	73.11	201001378047	Animal	Dry Clear	11 / 26 / 10 00 :00	V1 V2	North	Normal	Passenger	Straight Ahead	0	0	PD	Darkness
I 057	72.09	201001378058	Animal	Dry Clear	11 / 30 / 10 21 :00	V1 V2	South	Normal	Van/Mini-Van	Straight Ahead	0	0	PD	Darkness
I 057	59.11	201001381461	Animal	Dry Clear	11 / 27 / 10 04 :00	V1 V2	South	Normal	Tractor With Semi-Trailer	Straight Ahead	0	0	PD	Darkness
I 057	66.59	201001382344	Overturned	Dry Clear	12 / 03 / 10 07 :00	V1 V2	North	Normal	SUV	Straight Ahead	0	1	A-Injury	Daylight
I 057	66.89	201001382710	Fixed Object	Dry Clear	11 / 30 / 10 09 :00	V1 V2	North	Normal	Passenger	Straight Ahead	0	0	PD	Daylight
I 057	91.26	201001383323	Animal	Dry Clear	11 / 30 / 10 17 :00	V1 V2	North	Normal	Passenger	Straight Ahead	0	0	PD	Darkness
I 057	65.59	201001387035	Animal	Dry Clear	12 / 04 / 10 05 :00	V1 V2	North	Normal	SUV	Straight Ahead	0	0	PD	Darkness
I 057	91.98	201001388216	Animal	Dry Clear	10 / 30 / 10 02 :00	V1 V2	West	Normal	Passenger	Straight Ahead	0	0	PD	Darkness
I 057	63.11	201001388231	Animal	Dry Clear	12 / 02 / 10 06 :00	V1 V2	South	Normal	Pickup	Straight Ahead	0	0	PD	Dawn
I 057	78.06	201001388631	Sideswipe Same Direction	Dry Clear	12 / 09 / 10 20 :00	V1 V2	North North	Other/Unknown Normal	Tractor With Semi-Trailer Tractor With Semi-Trailer	Unknown Straight Ahead	0	0	PD	Darkness

ILLINOIS DEPARTMENT OF TRANSPORTATION

GIS Crash Report Details: 2010-2015 Crashes

I-57 Herrin Rd to I-64

Route	Mile	Case ID#	Collision Type	Surface /Weather	Crash Date Time		Direction	Driver Condition	Vehicle Type	Maneuver Code	Fatal Count	Injury Count	Injury Type	Lighting
I 057	86.86	201001397695	Fixed Object	Ice Other	12 / 16 / 10 06 :00	V1 V2	North	Normal	Pickup	Skidding/Control Loss	0	0	PD	Darkness
I 057	71.34	201001398619	Sideswipe Same Direction	Snow or Slush Snow	12 / 12 / 10 07 :00	V1 V2	North North	Normal Normal	Passenger Passenger	Straight Ahead Straight Ahead	0	1	C-Injury	Daylight
I 057	71.8	201001398628	Fixed Object	Snow or Slush Snow	12 / 12 / 10 07 :00	V1 V2	North	Normal	Tractor With Semi-Trailer	Skidding/Control Loss	0	0	PD	Daylight
I 057	89.11	201001398652	Fixed Object	Ice Snow	12 / 12 / 10 08 :00	V1 V2	North	Normal	Pickup	Straight Ahead	0	1	C-Injury	Daylight
I 057	68.6	201001399866	Sideswipe Same Direction	Wet Clear	12 / 17 / 10 08 :00	V1 V2	North North	Normal Normal	SUV SUV	Straight Ahead Straight Ahead	0	0	PD	Daylight
I 057	83.05	201001407047	Rear End	Ice Sleet/Hail	12 / 15 / 10 23 :00	V1 V2	North North	Normal Normal	Tractor With Semi-Trailer Pickup	Straight Ahead Straight Ahead	0	0	PD	Darkness
I 057	65.08	201001407082	Animal	Dry Clear	12 / 21 / 10 16 :00	V1 V2	North	Normal	Passenger	Straight Ahead	0	0	PD	Dusk
I 057	82.18	201001407083	Fixed Object	Ice Rain	12 / 15 / 10 23 :00	V1 V2	North	Normal	Tractor With Semi-Trailer	Avoiding Vehicle/Objects	0	0	PD	Darkness
I 057	84.08	201001408591	Overturned	Snow or Slush Snow	12 / 24 / 10 10 :00	V1 V2	South	Normal	Passenger	Straight Ahead	0	1	B-Injury	Daylight
I 057	77.12	201001409263	Sideswipe Same Direction	Snow or Slush Snow	12 / 24 / 10 15 :00	V1 V2	South South	Normal Normal	Passenger Tractor With Semi-Trailer	Straight Ahead Straight Ahead	0	0	PD	Daylight
I 057	88.11	201001409264	Fixed Object	Dry Clear	12 / 18 / 10 22 :00	V1 V2	North	Normal	Tractor With Semi-Trailer	Straight Ahead	0	0	PD	Darkness
I 057	84.08	201001409267	Fixed Object	Snow or Slush Snow	12 / 24 / 10 21 :00	V1 V2	North	Normal	Passenger	Skidding/Control Loss	0	0	PD	Darkness
I 057	75.11	201001412602	Fixed Object	Dry Clear	11 / 04 / 10 03 :00	V1 V2	North	Alcohol Impaired	Pickup	Straight Ahead	0	1	A-Injury	Darkness

ILLINOIS DEPARTMENT OF TRANSPORTATION

GIS Crash Report Details: 2010-2015 Crashes

I-57 Herrin Rd to I-64

Route	Mile	Case ID#	Collision Type	Surface /Weather	Crash Date Time		Direction	Driver Condition	Vehicle Type	Maneuver Code	Fatal Count	Injury Count	Injury Type	Lighting
I 057	79.98	201001413872	Sideswipe Opposite Direction	Wet Rain	12 / 29 / 10 13 :00	V1 V2	South North	Normal Normal	Passenger Bus Over 15 Passengers	Straight Ahead Straight Ahead	0	2	A-Injury	Daylight
I 057	85.09	201001414540	Fixed Object	Snow or Slush Snow	12 / 24 / 10 07 :00	V1 V2	South	Normal	Passenger	Straight Ahead	0	0	PD	Darkness
I 057	60.39	201001421969	Rear End	Dry Clear	11 / 28 / 10 14 :00	V1 V2	South South	Normal Normal	Passenger Passenger	Skidding/Control Loss Slow/Stop In Traffic	0	1	C-Injury	Daylight
I 057	88.11	201001428315	Sideswipe Same Direction	Snow or Slush Snow	12 / 24 / 10 16 :00	V1 V2	North North	Normal Normal	Passenger Pickup	Straight Ahead Straight Ahead	0	1	B-Injury	Daylight
I 057	81.13	201001431214	Overturned	Ice Snow	12 / 12 / 10 22 :00	V1 V2	North	Normal	Tractor With Semi-Trailer	Straight Ahead	0	1	C-Injury	Darkness
I 057	89.15	201001443906	Fixed Object	Ice Snow	12 / 12 / 10 08 :00	V1 V2	South	Normal	Pickup	Straight Ahead	0	0	PD	Daylight
I 057	71.38	201001450362	Fixed Object	Snow or Slush Snow	12 / 12 / 10 07 :00	V1 V2	North	Normal	Other Vehicle With Trailer	Skidding/Control Loss	0	0	PD	Daylight
I 057	90.11	201001451358	Rear End	Snow or Slush Snow	12 / 12 / 10 09 :00	V1 V2	North North	Normal Normal	Tractor With Semi-Trailer Tractor With Semi-Trailer	Straight Ahead Starting In Traffic	0	0	PD	Daylight
I 057	92.01	201001457503	Other Non-Collision	Snow	12 / 12 / 10 15 :00	V1 V2	North	Normal	Van/Mini-Van	Straight Ahead	0	0	PD	Daylight
I 057	76.1	201001457518	Sideswipe Same Direction	Dry Clear	12 / 14 / 10 09 :00	V1 V2	South South	Asleep/Fainted Normal	Passenger Tractor With Semi-Trailer	Straight Ahead Straight Ahead	0	0	PD	Daylight
I 057	66.09	201001462578	Sideswipe Same Direction	Dry Clear	12 / 30 / 10 10 :00	V1 V2	South South	Normal Normal	Tractor With Semi-Trailer SUV	Changing Lanes Straight Ahead	0	0	PD	Daylight
I 057	78.06	201101010309	Sideswipe Same Direction	Dry Clear	01 / 03 / 11 07 :00	V1 V2	South South	Asleep/Fainted Normal	Passenger Tractor With Semi-Trailer	Straight Ahead Straight Ahead	0	0	PD	Daylight

ILLINOIS DEPARTMENT OF TRANSPORTATION

GIS Crash Report Details: 2010-2015 Crashes

I-57 Herrin Rd to I-64

Route	Mile	Case ID#	Collision Type	Surface /Weather	Crash Date Time		Direction	Driver Condition	Vehicle Type	Maneuver Code	Fatal Count	Injury Count	Injury Type	Lighting
I 057	64.4	201101013242	Angle	Snow or Slush Snow	01 / 11 / 11 07 :00	V1 V2	Southeast South	Normal Normal	Pickup Tractor With Semi-Trailer	Skidding/Control Loss Straight Ahead	0	1	B-Injury	Daylight
I 057	85.5	201101013980	Animal	Dry Clear	01 / 15 / 11 07 :00	V1 V2	South	Normal	SUV	Straight Ahead	0	0	PD	Daylight
I 057	66.81	201101015360	Fixed Object	Dry Clear	01 / 15 / 11 23 :00	V1 V2	South	Other/Unknown	Passenger	Straight Ahead	0	0	PD	Darkness
I 057	62.1	201101015367	Animal	Dry Clear	01 / 17 / 11 04 :00	V1 V2	North	Normal	Passenger	Straight Ahead	0	0	PD	Darkness
I 057	64.12	201101016752	Fixed Object	Snow or Slush Snow	01 / 20 / 11 13 :00	V1 V2	North	Normal	SUV	Straight Ahead	0	0	PD	Daylight
I 057	91.26	201101016757	Sideswipe Same Direction	Dry Clear	01 / 14 / 11 08 :00	V1 V2	South Unknown	Normal Other/Unknown	Passenger Unknown	Straight Ahead Unknown	0	3	B-Injury	Daylight
I 057	78.54	201101016797	Sideswipe Same Direction	Snow or Slush Snow	01 / 20 / 11 11 :00	V1 V2	South South	Normal Normal	Tractor With Semi-Trailer Passenger	Straight Ahead Straight Ahead	0	0	PD	Daylight
I 057	71.35	201101016801	Sideswipe Same Direction	Snow or Slush Snow	01 / 20 / 11 09 :00	V1 V2	South South	Normal Normal	Pickup Tractor With Semi-Trailer	Skidding/Control Loss Straight Ahead	0	0	PD	Daylight
I 057	69.28	201101017842	Overturned	Dry Clear	01 / 18 / 11 19 :00	V1 V2	North	Normal	Pickup	Straight Ahead	0	1	B-Injury	Darkness
I 057	63.11	201101019770	Other Non-Collision	Dry Clear	01 / 19 / 11 03 :00	V1 V2	North	Alcohol Impaired	Passenger	Straight Ahead	0	0	PD	Darkness
I 057	70.1	201101019910	Sideswipe Same Direction	Dry Clear	01 / 28 / 11 14 :00	V1 V2	South South	Normal Normal	Passenger Passenger	Avoiding Vehicle/Objects Straight Ahead	0	1	B-Injury	Daylight
I 057	72.85	201101019911	Animal	Dry Clear	01 / 28 / 11 21 :00	V1 V2	South	Normal	Truck Single Unit	Straight Ahead	0	0	PD	Darkness

ILLINOIS DEPARTMENT OF TRANSPORTATION

GIS Crash Report Details: 2010-2015 Crashes

I-57 Herrin Rd to I-64

Route	Mile	Case ID#	Collision Type	Surface /Weather	Crash Date Time		Direction	Driver Condition	Vehicle Type	Maneuver Code	Fatal Count	Injury Count	Injury Type	Lighting
I 057	87.61	201101020485	Fixed Object	Dry Clear	01 / 30 / 11 15 :00	V1 V2	South	Alcohol Impaired	Van/Mini-Van	Straight Ahead	0	0	PD	Daylight
I 057	73.11	201101025217	Sideswipe Same Direction	Dry Clear	02 / 02 / 11 19 :00	V1 V2	South Unknown	Normal Other/Unknown	Passenger Unknown	Straight Ahead Unknown	0	0	PD	Darkness
I 057	59.22	201101025537	Rear End	Snow or Slush Snow	02 / 09 / 11 12 :00	V1 V2	South South	Normal Normal	Pickup Tractor With Semi-Trailer	Skidding/Control Loss Straight Ahead	0	0	PD	Daylight
I 057	63.21	201101026193	Animal	Dry Clear	02 / 12 / 11 14 :00	V1 V2	South	Normal	Van/Mini-Van	Straight Ahead	0	0	PD	Daylight
I 057	67.37	201101029760	Rear End	Dry Clear	02 / 16 / 11 04 :00	V1 V2	North North	Other/Unknown Normal	Tractor With Semi-Trailer Tractor With Semi-Trailer	Straight Ahead Slow/Stop In Traffic	0	3	A-Injury	Darkness
I 057	69.11	201101031352	Fixed Object	Dry Clear	02 / 16 / 11 05 :00	V1 V2	South	Alcohol Impaired	Passenger	Straight Ahead	0	1	A-Injury	Darkness
I 057	87.92	201101031834	Sideswipe Same Direction	Dry Other	02 / 26 / 11 10 :00	V1 V2	South South	Asleep/Fainted Other/Unknown	Passenger Tractor With Semi-Trailer	Skidding/Control Loss Straight Ahead	0	0	PD	Daylight
I 057	59.2	201101037235	Fixed Object	Wet Rain	02 / 24 / 11 16 :00	V1 V2	South	Normal	Passenger	Straight Ahead	0	0	PD	Daylight
I 057	90.11	201101037914	Animal	Dry Clear	03 / 04 / 11 02 :00	V1 V2	South	Normal	Passenger	Straight Ahead	0	0	PD	Darkness
I 057	59.1	201101041520	Head On	Snow or Slush Snow	02 / 09 / 11 12 :00	V1 V2	North South	Normal Normal	Passenger Tractor With Semi-Trailer	Changing Lanes Straight Ahead	0	1	B-Injury	Daylight
I 057	65.08	201101045932	Fixed Object	Dry Clear	03 / 07 / 11 15 :00	V1 V2	North	Normal	Pickup	Straight Ahead	0	1	B-Injury	Daylight
I 057	89.11	201101047818	Sideswipe Same Direction	Wet Rain	03 / 13 / 11 23 :00	V1 V2	North North	Normal Normal	Van/Mini-Van Passenger	Skidding/Control Loss Straight Ahead	0	0	PD	Darkness

ILLINOIS DEPARTMENT OF TRANSPORTATION

GIS Crash Report Details: 2010-2015 Crashes

I-57 Herrin Rd to I-64

Route	Mile	Case ID#	Collision Type	Surface /Weather	Crash Date Time		Direction	Driver Condition	Vehicle Type	Maneuver Code	Fatal Count	Injury Count	Injury Type	Lighting
I 057	64.13	201101049841	Sideswipe Same Direction	Wet Clear	03 / 15 / 11 16 :00	V1 V2	North North	Normal Normal	Tractor With Semi-Trailer Passenger	Changing Lanes Passing/Overtaking	0	0	PD	Daylight
I 057	71.08	201101055570	Sideswipe Same Direction	Dry Clear	03 / 13 / 11 22 :00	V1 V2	North North	Normal Normal	Tractor With Semi-Trailer Passenger	Passing/Overtaking Straight Ahead	0	1	A-Injury	Darkness
I 057	59.1	201101063447	Fixed Object	Ice Snow	02 / 09 / 11 13 :00	V1 V2	South	Normal	Pickup	Skidding/Control Loss	0	1	B-Injury	Daylight
I 057	59.1	201101063493	Rear End	Ice Snow	02 / 09 / 11 13 :00	V1 V2	South South	Normal Normal	Passenger Passenger	Skidding/Control Loss Straight Ahead	0	0	PD	Daylight
I 057	61.1	201101063533	Fixed Object	Ice Snow	02 / 09 / 11 14 :00	V1 V2	South	Normal	Passenger	Straight Ahead	0	0	PD	Daylight
I 057	75	201101064249	Overturned	Dry Clear	03 / 20 / 11 17 :00	V1 V2	South	Normal	Other Vehicle With Trailer	Straight Ahead	0	0	PD	Daylight
I 057	83.06	201101064571	Rear End	Dry Clear	03 / 25 / 11 06 :00	V1 V2	North North	Fatigued Normal	Passenger Tractor With Semi-Trailer	Straight Ahead Straight Ahead	0	1	B-Injury	Daylight
I 057	71.15	201101064659	Overturned	Dry Clear	03 / 20 / 11 15 :00	V1 V2	South	Normal	Passenger	Straight Ahead	0	0	PD	Daylight
I 057	68.37	201101066750	Fixed Object	Snow or Slush Snow	02 / 09 / 11 13 :00	V1 V2	South	Alcohol Impaired	Passenger	Skidding/Control Loss	0	0	PD	Daylight
I 057	66.59	201101067904	Other Non-Collision	Dry Clear	03 / 21 / 11 16 :00	V1 V2	North	Normal	Pickup	Straight Ahead	0	0	PD	Daylight
I 057	60.34	201101068088	Sideswipe Same Direction	Dry Clear	03 / 21 / 11 12 :00	V1 V2	North North	Normal Normal	Passenger Tractor With Semi-Trailer	Passing/Overtaking Straight Ahead	0	2	B-Injury	Daylight
I 057	65.29	201101068390	Fixed Object	Snow or Slush Snow	02 / 05 / 11 08 :00	V1 V2	North	Normal	SUV	Skidding/Control Loss	0	0	PD	Daylight

ILLINOIS DEPARTMENT OF TRANSPORTATION

GIS Crash Report Details: 2010-2015 Crashes

I-57 Herrin Rd to I-64

Route	Mile	Case ID#	Collision Type	Surface /Weather	Crash Date Time		Direction	Driver Condition	Vehicle Type	Maneuver Code	Fatal Count	Injury Count	Injury Type	Lighting
I 057	70.1	201101077730	Animal	Dry Clear	04 / 03 / 11 16 :00	V1 V2	North	Normal	Passenger	Straight Ahead	0	0	PD	Daylight
I 057	64.11	201101077909	Animal	Dry Clear	04 / 05 / 11 10 :00	V1 V2	South	Normal	Pickup	Straight Ahead	0	0	PD	Daylight
I 057	88.61	201101087230	Animal	Wet Rain	04 / 11 / 11 05 :00	V1 V2	North	Normal	Passenger	Straight Ahead	0	0	PD	Dawn
I 057	84.08	201101100578	Fixed Object	Dry Clear	04 / 02 / 11 01 :00	V1 V2	North	Alcohol Impaired	Passenger	Straight Ahead	0	0	PD	Darkness
I 057	72.05	201101102415	Animal	Dry Clear	04 / 21 / 11 02 :00	V1 V2	South	Normal	Passenger	Straight Ahead	0	0	PD	Darkness
I 057	61.09	201101106248	Fixed Object	Dry Clear	04 / 22 / 11 01 :00	V1 V2	North	Alcohol Impaired	Passenger	Straight Ahead	0	1	A-Injury	Darkness
I 057	66.09	201101115590	Sideswipe Same Direction	Dry Clear	05 / 01 / 11 12 :00	V1 V2	South South	Normal Normal	Tractor With Semi-Trailer Passenger	Straight Ahead Straight Ahead	0	0	PD	Daylight
I 057	89.05	201101115656	Fixed Object	Dry Clear	04 / 13 / 11 05 :00	V1 V2	North	Illness	Tractor With Semi-Trailer	Changing Lanes	0	1	B-Injury	Darkness
I 057	83.63	201101115685	Fixed Object	Wet Clear	04 / 22 / 11 16 :00	V1 V2	North	Asleep/Fainted	Passenger	Straight Ahead	0	1	B-Injury	Daylight
I 057	64.8	201101118576	Sideswipe Same Direction	Dry Clear	05 / 03 / 11 20 :00	V1 V2	North North	Normal Normal	Passenger Passenger	Changing Lanes Straight Ahead	0	0	PD	Darkness
I 057	91.98	201101123796	Other Object	Dry Clear	04 / 23 / 11 12 :00	V1 V2	North North	Other/Unknown Normal	Tractor With Semi-Trailer Passenger	Straight Ahead Straight Ahead	0	0	PD	Daylight
I 057	67.1	201101131416	Fixed Object	Dry Clear	05 / 04 / 11 18 :00	V1 V2	North	Normal	Motorcycle (Over 150cc)	Straight Ahead	0	1	B-Injury	Daylight
I 057	59.18	201101131721	Other Non-Collision	Dry Clear	05 / 12 / 11 06 :00	V1 V2	North North	Normal Normal	Tractor With Semi-Trailer Passenger	Straight Ahead Straight Ahead	0	0	PD	Daylight

ILLINOIS DEPARTMENT OF TRANSPORTATION

GIS Crash Report Details: 2010-2015 Crashes

I-57 Herrin Rd to I-64

Route	Mile	Case ID#	Collision Type	Surface /Weather	Crash Date Time		Direction	Driver Condition	Vehicle Type	Maneuver Code	Fatal Count	Injury Count	Injury Type	Lighting
I 057	78.57	201101131899	Rear End	Wet Rain	04 / 23 / 11 06 :00	V1 V2	South South	Other/Unknown Normal	Tractor With Semi-Trailer Passenger	Changing Lanes Passing/Overtaking	0	2	B-Injury	Daylight
I 057	66.09	201101133053	Rear End	Dry Clear	05 / 06 / 11 15 :00	V1 V2	South South	Normal Normal	Passenger Passenger	Slow/Stop In Traffic Slow/Stop In Traffic	0	0	PD	Daylight
I 057	71.37	201101133310	Sideswipe Same Direction	Dry Clear	05 / 06 / 11 16 :00	V1 V2	South South	Normal Normal	Passenger Tractor With Semi-Trailer	Merging Straight Ahead	0	0	PD	Daylight
I 057	87.79	201101133578	Animal	Wet Rain	05 / 15 / 11 23 :00	V1 V2	South	Normal	Passenger	Straight Ahead	0	0	PD	Darkness
I 057	82.18	201101135223	Rear End	Dry Clear	05 / 06 / 11 15 :00	V1 V2	North North	Normal Normal	Tractor With Semi-Trailer Pickup	Straight Ahead Slow/Stop In Traffic	0	2	C-Injury	Daylight
I 057	59.83	201101141952	Animal	Dry Clear	05 / 15 / 11 13 :00	V1 V2	North	Normal	Passenger	Straight Ahead	0	0	PD	Daylight
I 057	69.12	201101142835	Animal	Dry Clear	05 / 18 / 11 05 :00	V1 V2	South	Normal	Passenger	Straight Ahead	0	0	PD	Dawn
I 057	90.13	201101142863	Animal	Dry Clear	05 / 19 / 11 02 :00	V1 V2	North	Normal	Tractor With Semi-Trailer	Straight Ahead	0	0	PD	Darkness
I 057	73	201101143604	Animal	Dry Clear	05 / 22 / 11 15 :00	V1 V2	South	Normal	Passenger	Straight Ahead	0	0	PD	Daylight
I 057	66.09	201101145878	Rear End	Dry Clear	05 / 06 / 11 18 :00	V1 V2	South South	Normal Normal	Tractor With Semi-Trailer Van/Mini-Van	Straight Ahead Straight Ahead	0	0	PD	Daylight
I 057	66.18	201101145924	Fixed Object	Dry Clear	05 / 22 / 11 19 :00	V1 V2	North	Asleep/Fainted	SUV	Straight Ahead	0	0	PD	Daylight
I 057	64.38	201101154061	Animal	Dry Clear	06 / 01 / 11 05 :00	V1 V2	South	Normal	Passenger	Straight Ahead	0	0	PD	Dawn
I 057	83.57	201101155052	Sideswipe Same Direction	Dry Clear	05 / 11 / 11 21 :00	V1 V2	South South	Normal Normal	Tractor With Semi-Trailer Passenger	Straight Ahead Straight Ahead	0	3	B-Injury	Darkness

ILLINOIS DEPARTMENT OF TRANSPORTATION

GIS Crash Report Details: 2010-2015 Crashes

I-57 Herrin Rd to I-64

Route	Mile	Case ID#	Collision Type	Surface /Weather	Crash Date Time		Direction	Driver Condition	Vehicle Type	Maneuver Code	Fatal Count	Injury Count	Injury Type	Lighting
I 057	68.15	201101155114	Overturned	Dry Clear	05 / 28 / 11 07 :00	V1 V2	North	Normal	Passenger	Passing/Overtaking	0	3	B-Injury	Daylight
I 057	63.59	201101155492	Rear End	Dry Clear	05 / 17 / 11 21 :00	V1 V2	North North	Drug Impaired Normal	Passenger Pickup	Straight Ahead Straight Ahead	0	0	PD	Darkness
I 057	83.06	201101156577	Animal	Dry Clear	06 / 03 / 11 03 :00	V1 V2	North	Normal	Pickup	Straight Ahead	0	0	PD	Darkness
I 057	90.1	201101157505	Animal	Dry Clear	05 / 11 / 11 20 :00	V1 V2	North	Normal	Passenger	Straight Ahead	0	0	PD	Darkness
I 057	70.09	201101157578	Sideswipe Same Direction	Dry Clear	05 / 27 / 11 17 :00	V1 V2	South South	Normal Normal	Tractor With Semi-Trailer Passenger	Changing Lanes Straight Ahead	0	0	PD	Daylight
I 057	88.36	201101163066	Fixed Object	Snow or Slush Snow	02 / 05 / 11 02 :00	V1 V2	South	Normal	Passenger	Skidding/Control Loss	0	1	A-Injury	Darkness
I 057	87.61	201101163920	Overturned	Dry Clear	06 / 02 / 11 10 :00	V1 V2	North	Normal	SUV	Avoiding Vehicle/Objects	1	1	Fatal	Daylight
I 057	91.77	201101164462	Sideswipe Same Direction	Dry Clear	06 / 08 / 11 11 :00	V1 V2	North North	Normal Normal	Tractor With Semi-Trailer Passenger	Straight Ahead Merging	0	1	C-Injury	Daylight
I 057	73.11	201101164482	Animal	Dry Clear	06 / 05 / 11 01 :00	V1 V2	South	Normal	Passenger	Straight Ahead	0	0	PD	Darkness
I 057	67.1	201101164864	Overturned	Dry Clear	06 / 09 / 11 02 :00	V1 V2	South	Normal	Passenger	Straight Ahead	0	0	PD	Darkness
I 057	87.51	201101166840	Rear End	Dry Clear	06 / 10 / 11 12 :00	V1 V2	South South	Normal Normal	Passenger Passenger	Straight Ahead Straight Ahead	0	0	PD	Daylight
I 057	78.06	201101175458	Sideswipe Same Direction	Dry Clear	06 / 09 / 11 18 :00	V1 V2	North North	Normal Normal	Other Vehicle With Trailer SUV	Changing Lanes Straight Ahead	0	0	PD	Daylight
I 057	61.2	201101178249	Other Non-Collision	Dry Clear	05 / 13 / 11 08 :00	V1 V2	South	Normal	Passenger	Straight Ahead	0	0	PD	Daylight

ILLINOIS DEPARTMENT OF TRANSPORTATION

GIS Crash Report Details: 2010-2015 Crashes

I-57 Herrin Rd to I-64

Route	Mile	Case ID#	Collision Type	Surface /Weather	Crash Date Time		Direction	Driver Condition	Vehicle Type	Maneuver Code	Fatal Count	Injury Count	Injury Type	Lighting
I 057	64.13	201101180301	Rear End	Dry Clear	06 / 20 / 11 16 :00	V1 V2	North North	Other/Unknown Normal	Passenger Tractor With Semi-Trailer	Straight Ahead Straight Ahead	0	0	PD	Daylight
I 057	67.11	201101180327	Animal	Dry Clear	06 / 14 / 11 21 :00	V1 V2	Unknown	Normal	Passenger	Straight Ahead	0	0	PD	Darkness
I 057	71.14	201101183914	Sideswipe Same Direction	Dry Clear	06 / 03 / 11 13 :00	V1 V2	N/A South	N/A Normal	N/A Van/Mini-Van	N/A Slow/Stop In Traffic	0	0	PD	Daylight
I 057	59.48	201101184537	Animal	Dry Clear	06 / 22 / 11 21 :00	V1 V2	South	Normal	Passenger	Straight Ahead	0	0	PD	Darkness
I 057	89.46	201101184941	Sideswipe Same Direction	Dry Clear	06 / 26 / 11 15 :00	V1 V2	North North	Normal Normal	SUV SUV	Passing/Overtaking Slow/Stop In Traffic	0	1	C-Injury	Daylight
I 057	82.86	201101185263	Overturned	Dry Clear	06 / 12 / 11 08 :00	V1 V2	North	Other/Unknown	Passenger	Skidding/Control Loss	0	2	A-Injury	Daylight
I 057	67.1	201101192116	Sideswipe Same Direction	Dry Clear	06 / 28 / 11 10 :00	V1 V2	South South	Normal Normal	Pickup Passenger	Changing Lanes Straight Ahead	0	0	PD	Daylight
I 057	61.09	201101192118	Rear End	Dry Clear	07 / 01 / 11 13 :00	V1 V2	North North	Normal Normal	Passenger Passenger	Straight Ahead Slow/Stop In Traffic	0	0	PD	Daylight
I 057	70.1	201101192148	Rear End	Dry Clear	06 / 29 / 11 16 :00	V1 V2	South South	Normal Normal	Pickup SUV	Slow/Stop In Traffic Slow/Stop In Traffic	0	3	B-Injury	Daylight
I 057	87.34	201101192156	Rear End	Dry Clear	06 / 30 / 11 16 :00	V1 V2	North North	Normal Normal	SUV SUV	Slow/Stop In Traffic Slow/Stop In Traffic	0	0	PD	Daylight
I 057	60.9	201101192226	Overturned	Dry Clear	06 / 20 / 11 02 :00	V1 V2	North	Fatigued	Pickup	Straight Ahead	0	2	B-Injury	Darkness
I 057	73.12	201101192276	Rear End	Dry Clear	07 / 01 / 11 12 :00	V1 V2	South South	Normal Normal	Other Passenger	Slow/Stop In Traffic Slow/Stop In Traffic	0	1	C-Injury	Daylight
I 057	72.1	201101192279	Rear End	Dry Clear	07 / 01 / 11 11 :00	V1 V2	South South	Normal Normal	Tractor With Semi-Trailer Passenger	Slow/Stop In Traffic Slow/Stop In Traffic	0	2	C-Injury	Daylight

ILLINOIS DEPARTMENT OF TRANSPORTATION

GIS Crash Report Details: 2010-2015 Crashes

I-57 Herrin Rd to I-64

Route	Mile	Case ID#	Collision Type	Surface /Weather	Crash Date Time		Direction	Driver Condition	Vehicle Type	Maneuver Code	Fatal Count	Injury Count	Injury Type	Lighting
I 057	69.89	201101192366	Rear End	Dry Clear	07 / 01 / 11 19 :00	V1 V2	South South	Normal Normal	SUV Passenger	Straight Ahead Slow/Stop In Traffic	0	0	PD	Daylight
I 057	60.57	201101197379	Rear End	Dry Clear	07 / 07 / 11 09 :00	V1 V2	South South	Asleep/Fainted Normal	Passenger SUV	Skidding/Control Loss Straight Ahead	0	1	B-Injury	Daylight
I 057	78.6	201101198025	Rear End	Dry Clear	06 / 29 / 11 09 :00	V1 V2	South South	Normal Normal	Tractor With Semi-Trailer Passenger	Straight Ahead Slow/Stop In Traffic	0	0	PD	Daylight
I 057	67.12	201101199082	Rear End	Dry Clear	07 / 05 / 11 11 :00	V1 V2	South South	Normal Normal	Tractor With Semi-Trailer Passenger	Slow/Stop In Traffic Slow/Stop In Traffic	0	0	PD	Daylight
I 057	72.11	201101199083	Sideswipe Same Direction	Dry Clear	07 / 05 / 11 14 :00	V1 V2	South South	Normal Normal	Truck Single Unit Passenger	Changing Lanes Straight Ahead	0	0	PD	Daylight
I 057	64.4	201101199437	Sideswipe Same Direction	Dry Clear	07 / 09 / 11 15 :00	V1 V2	South South	Normal Normal	Passenger Tractor With Semi-Trailer	Changing Lanes Straight Ahead	0	2	B-Injury	Daylight
I 057	86.1	201101204635	Rear End	Wet Rain	03 / 14 / 11 12 :00	V1 V2	North North	Normal Normal	Passenger Tractor With Semi-Trailer	Straight Ahead Straight Ahead	0	0	PD	Daylight
I 057	91.26	201101207564	Sideswipe Same Direction	Wet Rain	07 / 07 / 11 21 :00	V1 V2	North North	Normal Normal	Passenger Tractor With Semi-Trailer	Straight Ahead Passing/Overtaking	0	2	C-Injury	Darkness
I 057	82.19	201101207582	Rear End	Dry Clear	06 / 28 / 11 18 :00	V1 V2	South South	Normal Normal	Tractor With Semi-Trailer Tractor With Semi-Trailer	Slow/Stop In Traffic Slow/Stop In Traffic	0	0	PD	Daylight
I 057	64.13	201101207652	Rear End	Dry Clear	06 / 30 / 11 12 :00	V1 V2	North North	Normal Normal	SUV Passenger	Straight Ahead Slow/Stop In Traffic	0	1	C-Injury	Daylight
I 057	69.6	201101207666	Animal	Dry Clear	06 / 29 / 11 06 :00	V1 V2	North	Normal	Pickup	Straight Ahead	0	0	PD	Daylight
I 057	64.4	201101207680	Sideswipe Same Direction	Dry Clear	06 / 29 / 11 13 :00	V1 V2	South South	Normal Normal	Passenger Passenger	Merging Merging	0	0	PD	Daylight

ILLINOIS DEPARTMENT OF TRANSPORTATION

GIS Crash Report Details: 2010-2015 Crashes

I-57 Herrin Rd to I-64

Route	Mile	Case ID#	Collision Type	Surface /Weather	Crash Date Time		Direction	Driver Condition	Vehicle Type	Maneuver Code	Fatal Count	Injury Count	Injury Type	Lighting
I 057	72.09	201101209442	Other Object	Dry Clear	07 / 09 / 11 17 :00	V1 V2	North South	Normal Normal	SUV Tractor With Semi-Trailer	Straight Ahead Straight Ahead	0	0	PD	Daylight
I 057	60.08	201101209468	Fixed Object	Dry Clear	07 / 12 / 11 20 :00	V1 V2	North North	Normal Normal	Tractor With Semi-Trailer Van/Mini-Van	Changing Lanes Avoiding Vehicle/Objects	0	0	PD	Dusk
I 057	90.21	201101211540	Sideswipe Same Direction	Dry Clear	07 / 11 / 11 10 :00	V1 V2	North North	Normal Normal	SUV Passenger	Changing Lanes Changing Lanes	0	0	PD	Daylight
I 057	71.04	201101212739	Rear End	Dry Clear	07 / 01 / 11 13 :00	V1 V2	South South	Normal Normal	SUV Passenger	Straight Ahead Slow/Stop In Traffic	0	0	PD	Daylight
I 057	69.61	201101216122	Rear End	Dry Clear	06 / 30 / 11 11 :00	V1 V2	South South	Normal Normal	Truck Single Unit Passenger	Straight Ahead Straight Ahead	0	0	PD	Daylight
I 057	91.26	201101223283	Animal	Wet Rain	04 / 16 / 11 09 :00	V1 V2	North	Normal	Passenger	Straight Ahead	0	0	PD	Daylight
I 057	67.1	201101223606	Rear End	Dry Clear	07 / 01 / 11 11 :00	V1 V2	South South	Normal Normal	SUV Passenger	Changing Lanes Slow/Stop In Traffic	0	1	C-Injury	Daylight
I 057	65.27	201101224829	Rear End	Dry Clear	07 / 21 / 11 17 :00	V1 V2	N/A South	N/A Normal	N/A Tractor With Semi-Trailer	N/A Straight Ahead	0	1	B-Injury	Daylight
I 057	68.11	201101225046	Rear End	Dry Clear	07 / 22 / 11 09 :00	V1 V2	South South	Normal Normal	Motorcycle (Over 150cc) Passenger	Skidding/Control Loss Slow/Stop In Traffic	0	2	A-Injury	Daylight
I 057	78.06	201101225180	Sideswipe Same Direction	Dry Clear	07 / 22 / 11 15 :00	V1 V2	South South	Normal Normal	Tractor With Semi-Trailer Pickup	Straight Ahead Passing/Overtaking	0	0	PD	Daylight
I 057	64.12	201101225536	Sideswipe Same Direction	Dry Clear	07 / 27 / 11 14 :00	V1 V2	North North	Normal Normal	Truck Single Unit Passenger	Skidding/Control Loss Avoiding Vehicle/Objects	0	1	A-Injury	Daylight
I 057	91.26	201101227495	Rear End	Dry Clear	06 / 11 / 11 09 :00	V1 V2	South South	Normal Normal	SUV Passenger	Straight Ahead Straight Ahead	0	0	PD	Daylight

ILLINOIS DEPARTMENT OF TRANSPORTATION

GIS Crash Report Details: 2010-2015 Crashes

I-57 Herrin Rd to I-64

Route	Mile	Case ID#	Collision Type	Surface /Weather	Crash Date Time		Direction	Driver Condition	Vehicle Type	Maneuver Code	Fatal Count	Injury Count	Injury Type	Lighting
I 057	79.1	201101229151	Fixed Object	Dry Clear	07 / 30 / 11 22 :00	V1 V2	North	Normal	Tractor With Semi-Trailer	Skidding/Control Loss	0	1	B-Injury	Darkness
I 057	79.98	201101229971	Rear End	Dry Clear	07 / 31 / 11 13 :00	V1 V2	South South	Normal Normal	SUV SUV	Straight Ahead Slow/Stop In Traffic	0	0	PD	Daylight
I 057	80.11	201101229976	Fixed Object	Dry Clear	07 / 31 / 11 12 :00	V1 V2	South	Normal	SUV	Avoiding Vehicle/Objects	0	0	PD	Daylight
I 057	64.41	201101234267	Rear End	Dry Clear	06 / 28 / 11 10 :00	V1 V2	North North	Normal Normal	Passenger SUV	Slow/Stop In Traffic Slow/Stop In Traffic	0	0	PD	Daylight
I 057	80.08	201101234338	Rear End	Dry Clear	07 / 30 / 11 23 :00	V1 V2	South South	Normal Normal	Passenger Truck Single Unit	Straight Ahead Slow/Stop In Traffic	0	1	A-Injury	Darkness
I 057	80.05	201101234361	Sideswipe Same Direction	Dry Clear	07 / 28 / 11 12 :00	V1 V2	South South	Normal Normal	Tractor With Semi-Trailer Passenger	Changing Lanes Straight Ahead	0	2	A-Injury	Daylight
I 057	69.11	201101234959	Sideswipe Same Direction	Dry Clear	07 / 28 / 11 22 :00	V1 V2	North North	Normal Normal	Tractor With Semi-Trailer Passenger	Changing Lanes Straight Ahead	0	0	PD	Darkness
I 057	68.13	201101234987	Rear End	Dry Clear	08 / 03 / 11 16 :00	V1 V2	North North	Asleep/Fainted Normal	Passenger SUV	Straight Ahead Slow/Stop In Traffic	0	0	PD	Daylight
I 057	77.13	201101238069	Rear End	Dry Clear	06 / 26 / 11 17 :00	V1 V2	South South	Other/Unknown Normal	Passenger Pickup	Straight Ahead Slow/Stop In Traffic	0	0	PD	Daylight
I 057	64.13	201101240181	Rear End	Dry Clear	08 / 04 / 11 15 :00	V1 V2	North North	Normal Normal	Passenger Passenger	Straight Ahead Other	0	0	PD	Daylight
I 057	74.82	201101242458	Overturned	Dry Clear	08 / 07 / 11 05 :00	V1 V2	North	Normal	Passenger	Straight Ahead	0	0	PD	Daylight
I 057	61.1	201101242461	Animal	Dry Clear	08 / 10 / 11 02 :00	V1 V2	North	Normal	Pickup	Straight Ahead	0	0	PD	Darkness
I 057	73.38	201101245396	Overturned	Dry Clear	08 / 07 / 11 14 :00	V1 V2	South	Normal	SUV	Skidding/Control Loss	0	1	A-Injury	Daylight

ILLINOIS DEPARTMENT OF TRANSPORTATION

GIS Crash Report Details: 2010-2015 Crashes

I-57 Herrin Rd to I-64

Route	Mile	Case ID#	Collision Type	Surface /Weather	Crash Date Time		Direction	Driver Condition	Vehicle Type	Maneuver Code	Fatal Count	Injury Count	Injury Type	Lighting
I 057	73.11	201101245873	Other Object	Dry Clear	08 / 14 / 11 01 :00	V1 V2	South	Normal	Passenger	Straight Ahead	0	0	PD	Darkness
I 057	77.12	201101251332	Animal	Dry Clear	08 / 16 / 11 23 :00	V1 V2	South	Normal	Passenger	Straight Ahead	0	0	PD	Darkness
I 057	60.08	201101253151	Animal	Dry Clear	08 / 16 / 11 21 :00	V1 V2	South	Normal	Passenger	Straight Ahead	0	0	PD	Darkness
I 057	64.62	201101255933	Sideswipe Same Direction	Dry Clear	08 / 15 / 11 12 :00	V1 V2	North North	Normal Normal	Passenger Passenger	Changing Lanes Straight Ahead	0	0	PD	Daylight
I 057	74.14	201101259123	Sideswipe Same Direction	Dry Clear	08 / 12 / 11 18 :00	V1 V2	South South	Normal Normal	Tractor With Semi-Trailer Pickup	Avoiding Vehicle/Objects Other	0	0	PD	Daylight
I 057	88.12	201101259159	Fixed Object	Dry Clear	08 / 12 / 11 07 :00	V1 V2	South	Normal	Passenger	Straight Ahead	0	5	B-Injury	Daylight
I 057	74.39	201101260994	Fixed Object	Dry Clear	07 / 11 / 11 08 :00	V1 V2	North	Asleep/Fainted	Passenger	Skidding/Control Loss	0	0	PD	Daylight
I 057	71.84	201101261595	Animal	Clear	07 / 27 / 11 21 :00	V1 V2	South	Normal	Passenger	Straight Ahead	0	0	PD	Darkness, Lighted Road
I 057	80.11	201101267865	Rear End	Dry Clear	08 / 23 / 11 15 :00	V1 V2	North North	Normal Normal	Tractor With Semi-Trailer Passenger	Changing Lanes Straight Ahead	0	0	PD	Daylight
I 057	65.35	201101273779	Rear End	Dry Clear	09 / 05 / 11 17 :00	V1 V2	North North	Normal Normal	Passenger Van/Mini-Van	Passing/Overtaking Straight Ahead	0	1	B-Injury	Daylight
I 057	61.41	201101275727	Sideswipe Same Direction	Dry Clear	09 / 06 / 11 20 :00	V1 V2	North North	Normal Normal	Other Tractor With Semi-Trailer	Changing Lanes Straight Ahead	0	0	PD	Darkness
I 057	83.56	201101277308	Fixed Object	Dry Clear	09 / 07 / 11 08 :00	V1 V2	South	Normal	Pickup	Straight Ahead	0	0	PD	Daylight
I 057	71.13	201101277316	Fixed Object	Dry Clear	09 / 06 / 11 07 :00	V1 V2	North	Illness	Passenger	Changing Lanes	0	1	C-Injury	Daylight

ILLINOIS DEPARTMENT OF TRANSPORTATION

GIS Crash Report Details: 2010-2015 Crashes

I-57 Herrin Rd to I-64

Route	Mile	Case ID#	Collision Type	Surface /Weather	Crash Date Time		Direction	Driver Condition	Vehicle Type	Maneuver Code	Fatal Count	Injury Count	Injury Type	Lighting
I 057	83.57	201101277823	Other Object	Dry Clear	08 / 04 / 11 07 :00	V1 V2	South	Normal	SUV	Avoiding Vehicle/Objects	0	0	PD	Daylight
I 057	75.13	201101278112	Fixed Object	Wet Rain	09 / 09 / 11 13 :00	V1 V2	South	Normal	Passenger	Changing Lanes	0	0	PD	Daylight
I 057	61.1	201101278132	Overturned	Dry Clear	09 / 06 / 11 20 :00	V1 V2	North	Normal	Passenger	Skidding/Control Loss	0	0	PD	Darkness
I 057	83.06	201101278136	Sideswipe Same Direction	Dry Clear	09 / 10 / 11 11 :00	V1 V2	South South	Normal Normal	Passenger Tractor With Semi-Trailer	Changing Lanes Straight Ahead	0	0	PD	Daylight
I 057	65.39	201101283348	Other Object	Dry Rain	09 / 14 / 11 17 :00	V1 V2	North	Normal	Passenger	Straight Ahead	0	0	PD	Daylight
I 057	77.12	201101290721	Rear End	Dry Clear	09 / 15 / 11 13 :00	V1 V2	North North	Other/Unknown Normal	Motorcycle (Over 150cc) Motorcycle (Over 150cc)	Skidding/Control Loss Straight Ahead	0	1	A-Injury	Daylight
I 057	68.11	201101293248	Animal	Dry Clear	09 / 16 / 11 19 :00	V1 V2	North	Normal	SUV	Straight Ahead	0	0	PD	Darkness
I 057	64.59	201101295214	Fixed Object	Dry Clear	09 / 14 / 11 07 :00	V1 V2	North	Normal	Tractor With Semi-Trailer	Straight Ahead	0	0	PD	Daylight
I 057	69.6	201101302197	Animal	Dry Clear	09 / 11 / 11 18 :00	V1 V2	North	Normal	Passenger	Straight Ahead	0	0	PD	Dusk
I 057	65.08	201101303166	Other Non-Collision	Dry Clear	08 / 31 / 11 18 :00	V1 V2	North North	Normal Normal	Tractor With Semi-Trailer Tractor With Semi-Trailer	Straight Ahead Straight Ahead	0	0	PD	Daylight
I 057	80.09	201101313421	Fixed Object	Dry Clear	10 / 06 / 11 14 :00	V1 V2	South	Normal	Motor Driven Cycle	Skidding/Control Loss	0	1	A-Injury	Daylight
I 057	88.2	201101322169	Animal	Dry Clear	10 / 12 / 11 02 :00	V1 V2	North	Normal	Tractor With Semi-Trailer	Straight Ahead	0	0	PD	Darkness

ILLINOIS DEPARTMENT OF TRANSPORTATION

GIS Crash Report Details: 2010-2015 Crashes

I-57 Herrin Rd to I-64

Route	Mile	Case ID#	Collision Type	Surface /Weather	Crash Date Time		Direction	Driver Condition	Vehicle Type	Maneuver Code	Fatal Count	Injury Count	Injury Type	Lighting
I 057	80.53	201101322184	Animal	Dry Clear	10 / 15 / 11 01 :00	V1 V2	North	Normal	Passenger	Straight Ahead	0	0	PD	Darkness
I 057	65.08	201101322190	Animal	Dry Clear	10 / 15 / 11 04 :00	V1 V2	North	Normal	Passenger	Straight Ahead	0	0	PD	Darkness
I 057	74.18	201101322192	Animal	Dry Clear	10 / 15 / 11 02 :00	V1 V2	South	Normal	Tractor With Semi-Trailer	Straight Ahead	0	0	PD	Darkness
I 057	77.06	201101322198	Animal	Dry Clear	10 / 16 / 11 04 :00	V1 V2	North	Normal	Passenger	Straight Ahead	0	0	PD	Darkness
I 057	64.13	201101323662	Overturned	Dry Clear	10 / 11 / 11 21 :00	V1 V2	South	Normal	Passenger	Avoiding Vehicle/Objects	0	0	PD	Darkness
I 057	82.51	201101323671	Animal	Dry Clear	10 / 14 / 11 00 :00	V1 V2	South	Normal	Pickup	Straight Ahead	0	0	PD	Darkness
I 057	75.13	201101323685	Animal	Dry Clear	10 / 04 / 11 21 :00	V1 V2	South	Normal	Tractor With Semi-Trailer	Straight Ahead	0	0	PD	Darkness
I 057	76.1	201101324899	Animal	Dry Clear	10 / 16 / 11 01 :00	V1 V2	North	Normal	Passenger	Straight Ahead	0	0	PD	Darkness
I 057	82.18	201101324931	Rear End	Dry Clear	10 / 16 / 11 15 :00	V1 V2	North North	Normal Normal	Pickup Van/Mini-Van	Straight Ahead Slow/Stop In Traffic	0	1	A-Injury	Daylight
I 057	64.9	201101324932	Animal	Dry Clear	10 / 16 / 11 21 :00	V1 V2	South	Normal	Passenger	Straight Ahead	0	0	PD	Darkness
I 057	82.18	201101333268	Rear End	Dry Clear	10 / 16 / 11 16 :00	V1 V2	North North	Normal Normal	Passenger Passenger	Slow/Stop In Traffic Slow/Stop In Traffic	0	0	PD	Daylight
I 057	80.92	201101333312	Sideswipe Same Direction	Dry Clear	10 / 17 / 11 15 :00	V1 V2	North North	Normal Had Been Drinking	Tractor With Semi-Trailer Passenger	Straight Ahead Passing/Overtaking	0	0	PD	Daylight
I 057	89.12	201101336595	Animal	Dry Clear	10 / 28 / 11 00 :00	V1 V2	South	Normal	Tractor With Semi-Trailer	Straight Ahead	0	0	PD	Darkness

ILLINOIS DEPARTMENT OF TRANSPORTATION

GIS Crash Report Details: 2010-2015 Crashes

I-57 Herrin Rd to I-64

Route	Mile	Case ID#	Collision Type	Surface /Weather	Crash Date Time		Direction	Driver Condition	Vehicle Type	Maneuver Code	Fatal Count	Injury Count	Injury Type	Lighting
I 057	61.1	201101338479	Animal	Clear	10 / 30 / 11 20 :00	V1 V2	South	Normal	Passenger	Straight Ahead	0	0	PD	Darkness
I 057	78.06	201101340431	Animal	Dry Clear	11 / 01 / 11 06 :00	V1 V2	North	Normal	Passenger	Straight Ahead	0	0	PD	Dawn
I 057	77.37	201101341533	Animal	Dry Clear	10 / 28 / 11 19 :00	V1 V2	South	Normal	SUV	Straight Ahead	0	0	PD	Darkness
I 057	73.71	201101341539	Animal	Dry Clear	10 / 29 / 11 22 :00	V1 V2	North	Normal	Passenger	Straight Ahead	0	0	PD	Darkness
I 057	68.11	201101345249	Animal	Dry Clear	11 / 03 / 11 03 :00	V1 V2	North	Normal	Passenger	Straight Ahead	0	0	PD	Darkness
I 057	65	201101345464	Animal	Dry Clear	10 / 29 / 11 07 :00	V1 V2	North	Normal	Passenger	Straight Ahead	0	0	PD	Daylight
I 057	67.06	201101345467	Animal	Dry Clear	10 / 29 / 11 13 :00	V1 V2	South	Normal	Passenger	Straight Ahead	0	0	PD	Daylight
I 057	67.36	201101345976	Animal	Dry Clear	11 / 06 / 11 17 :00	V1 V2	South	Normal	Passenger	Straight Ahead	0	0	PD	Darkness
I 057	91.3	201101349211	Animal	Dry Clear	11 / 02 / 11 05 :00	V1 V2	South	Normal	Passenger	Straight Ahead	0	0	PD	Daylight
I 057	91.5	201101352650	Animal	Dry Clear	11 / 10 / 11 00 :00	V1 V2	South	Normal	Van/Mini-Van	Straight Ahead	0	0	PD	Darkness
I 057	88.11	201101352657	Animal	Dry Clear	11 / 10 / 11 06 :00	V1 V2	South	Normal	Tractor With Semi-Trailer	Straight Ahead	0	0	PD	Dawn
I 057	67.6	201101353106	Animal	Dry Clear	11 / 10 / 11 20 :00	V1 V2	South	Normal	Pickup	Straight Ahead	0	0	PD	Darkness
I 057	59.87	201101353138	Animal	Dry Clear	11 / 10 / 11 21 :00	V1 V2	South	Normal	Passenger	Straight Ahead	0	0	PD	Darkness

ILLINOIS DEPARTMENT OF TRANSPORTATION

GIS Crash Report Details: 2010-2015 Crashes

I-57 Herrin Rd to I-64

Route	Mile	Case ID#	Collision Type	Surface /Weather	Crash Date Time		Direction	Driver Condition	Vehicle Type	Maneuver Code	Fatal Count	Injury Count	Injury Type	Lighting
I 057	65.34	201101353313	Sideswipe Same Direction	Dry Clear	11 / 11 / 11 17 :00	V1 V2	South South	Other/Unknown Normal	Tractor With Semi-Trailer Other Vehicle With Trailer	Passing/Overtaking Straight Ahead	0	0	PD	Darkness
I 057	67.46	201101353346	Animal	Dry Clear	11 / 11 / 11 01 :00	V1 V2	North	Normal	SUV	Straight Ahead	0	0	PD	Darkness
I 057	87.57	201101353506	Animal	Dry Clear	11 / 12 / 11 05 :00	V1 V2	North	Normal	Passenger	Straight Ahead	0	0	PD	Darkness
I 057	67.11	201101362085	Animal	Dry Clear	11 / 12 / 11 04 :00	V1 V2	South	Normal	SUV	Straight Ahead	0	0	PD	Darkness
I 057	66.59	201101362715	Animal	Dry Clear	11 / 17 / 11 12 :00	V1 V2	North	Normal	Passenger	Straight Ahead	0	0	PD	Daylight
I 057	70.61	201101362948	Animal	Wet Rain	11 / 20 / 11 11 :00	V1 V2	North	Normal	Pickup	Straight Ahead	0	0	PD	Daylight
I 057	59.11	201101364124	Fixed Object	Dry Clear	11 / 04 / 11 21 :00	V1 V2	N/A South	N/A Normal	N/A Passenger	N/A Avoiding Vehicle/Objects	0	1	A-Injury	Darkness
I 057	67.1	201101364129	Fixed Object	Dry Clear	11 / 08 / 11 01 :00	V1 V2	North	Normal	Tractor With Semi-Trailer	Straight Ahead	0	0	PD	Darkness
I 057	86.26	201101365110	Animal	Dry Clear	11 / 15 / 11 05 :00	V1 V2	South	Normal	Passenger	Straight Ahead	0	0	PD	Dawn
I 057	86.26	201101365124	Animal	Dry Clear	11 / 15 / 11 05 :00	V1 V2	South	Normal	Tractor With Semi-Trailer	Straight Ahead	0	0	PD	Dawn
I 057	88.06	201101365143	Animal	Dry Rain	11 / 21 / 11 20 :00	V1 V2	South	Normal	Tractor With Semi-Trailer	Straight Ahead	0	0	PD	Darkness
I 057	87.11	201101367693	Sideswipe Same Direction	Dry Clear	11 / 17 / 11 16 :00	V1 V2	North North	Normal Other/Unknown	Tractor With Semi-Trailer Tractor With Semi-Trailer	Straight Ahead Other	0	0	PD	Daylight

ILLINOIS DEPARTMENT OF TRANSPORTATION

GIS Crash Report Details: 2010-2015 Crashes

I-57 Herrin Rd to I-64

Route	Mile	Case ID#	Collision Type	Surface /Weather	Crash Date Time		Direction	Driver Condition	Vehicle Type	Maneuver Code	Fatal Count	Injury Count	Injury Type	Lighting
I 057	86.1	201101368552	Sideswipe Same Direction	Dry Clear	11 / 27 / 11 18 :00	V1 V2	South South	Other/Unknown Normal	Tractor With Semi-Trailer Passenger	Changing Lanes Straight Ahead	0	0	PD	Darkness
I 057	67.35	201101368606	Animal	Dry Clear	11 / 08 / 11 00 :00	V1 V2	South	Normal	Passenger	Straight Ahead	0	0	PD	Darkness
I 057	91.29	201101370623	Animal	Dry Clear	11 / 18 / 11 21 :00	V1 V2	North	Normal	Van/Mini-Van	Straight Ahead	0	0	PD	Darkness
I 057	82.18	201101370624	Sideswipe Opposite Direction	Dry Clear	11 / 25 / 11 01 :00	V1 V2	South North	Alcohol Impaired Normal	Passenger Passenger	Skidding/Control Loss Straight Ahead	0	0	PD	Darkness
I 057	71.16	201101370648	Animal	Dry Clear	11 / 23 / 11 22 :00	V1 V2	South	Normal	Passenger	Straight Ahead	0	0	PD	Darkness
I 057	78.06	201101371351	Animal	Wet Rain	11 / 14 / 11 16 :00	V1 V2	South	Normal	Tractor With Semi-Trailer	Straight Ahead	0	0	PD	Dusk
I 057	69.11	201101371353	Overturned	Wet Rain	11 / 15 / 11 15 :00	V1 V2	North	Normal	Truck Single Unit	Avoiding Vehicle/Objects	0	0	PD	Daylight
I 057	86.95	201101371398	Fixed Object	Wet Rain	11 / 28 / 11 07 :00	V1 V2	North	Normal	Pickup	Avoiding Vehicle/Objects	0	1	B-Injury	Daylight
I 057	71.16	201101371417	Animal	Dry Clear	11 / 23 / 11 22 :00	V1 V2	South	Normal	Tractor With Semi-Trailer	Straight Ahead	0	0	PD	Darkness
I 057	70.35	201101376886	Sideswipe Same Direction	Wet Rain	11 / 28 / 11 11 :00	V1 V2	North North	Illness Normal	Van/Mini-Van SUV	Changing Lanes Straight Ahead	0	1	B-Injury	Daylight
I 057	74.14	201101376929	Fixed Object	Wet Rain	11 / 28 / 11 11 :00	V1 V2	North	Illness	Passenger	Skidding/Control Loss	0	1	A-Injury	Daylight
I 057	91.98	201101378538	Sideswipe Same Direction	Wet Rain	11 / 28 / 11 19 :00	V1 V2	South South	Normal Normal	Tractor With Semi-Trailer SUV	Skidding/Control Loss Straight Ahead	0	0	PD	Darkness
I 057	87.11	201101378662	Rear End	Dry Clear	11 / 17 / 11 18 :00	V1 V2	South South	Normal Normal	Tractor With Semi-Trailer Passenger	Slow/Stop In Traffic Slow/Stop In Traffic	0	2	A-Injury	Darkness

ILLINOIS DEPARTMENT OF TRANSPORTATION

GIS Crash Report Details: 2010-2015 Crashes

I-57 Herrin Rd to I-64

Route	Mile	Case ID#	Collision Type	Surface /Weather	Crash Date Time		Direction	Driver Condition	Vehicle Type	Maneuver Code	Fatal Count	Injury Count	Injury Type	Lighting
I 057	88.9	201101380345	Animal	Dry Clear	12 / 03 / 11 18 :00	V1 V2	North	Normal	Passenger	Straight Ahead	0	0	PD	Darkness
I 057	86.54	201101384835	Animal	Dry Clear	12 / 08 / 11 09 :00	V1 V2	South	Normal	Tractor With Semi-Trailer	Straight Ahead	0	0	PD	Daylight
I 057	66.91	201101384858	Animal	Dry Clear	12 / 02 / 11 12 :00	V1 V2	South	Normal	Van/Mini-Van	Straight Ahead	0	0	PD	Daylight
I 057	67.4	201101384926	Animal	Dry Clear	11 / 24 / 11 06 :00	V1 V2	North	Normal	Passenger	Straight Ahead	0	0	PD	Dawn
I 057	85.09	201101390405	Animal	Dry Clear	11 / 25 / 11 19 :00	V1 V2	North	Normal	Passenger	Straight Ahead	0	0	PD	Darkness
I 057	86.1	201101404397	Fixed Object	Dry Clear	10 / 23 / 11 05 :00	V1 V2	North	Alcohol Impaired	SUV	Skidding/Control Loss	0	1	B-Injury	Darkness
I 057	73.14	201101405512	Animal	Dry Clear	11 / 16 / 11 21 :00	V1 V2	South	Normal	Passenger	Straight Ahead	0	0	PD	Darkness
I 057	85.09	201101405648	Rear End	Dry Clear	10 / 16 / 11 13 :00	V1 V2	North North	Normal Normal	Passenger SUV	Straight Ahead Slow/Stop In Traffic	0	0	PD	Daylight
I 057	89.11	201101405666	Rear End	Dry Clear	10 / 16 / 11 13 :00	V1 V2	North North	Normal Normal	Pickup SUV	Straight Ahead Straight Ahead	0	0	PD	Daylight
I 057	69.37	201101408404	Fixed Object	Dry Clear	12 / 12 / 11 08 :00	V1 V2	North	Normal	Tractor With Semi-Trailer	Straight Ahead	0	0	PD	Daylight
I 057	83.07	201101410699	Fixed Object	Dry Clear	12 / 29 / 11 11 :00	V1 V2	South South	Normal Other/Unknown	Tractor With Semi-Trailer Unknown	Straight Ahead Unknown	0	0	PD	Daylight
I 057	69.11	201101412606	Animal	Dry Clear	11 / 19 / 11 17 :00	V1 V2	North	Normal	Pickup	Straight Ahead	0	0	PD	Darkness
I 057	75.11	201101413202	Sideswipe Same Direction	Dry Clear	12 / 28 / 11 17 :00	V1 V2	North North	Normal Normal	Tractor With Semi-Trailer SUV	Changing Lanes Straight Ahead	0	0	PD	Daylight

ILLINOIS DEPARTMENT OF TRANSPORTATION

GIS Crash Report Details: 2010-2015 Crashes

I-57 Herrin Rd to I-64

Route	Mile	Case ID#	Collision Type	Surface /Weather	Crash Date Time		Direction	Driver Condition	Vehicle Type	Maneuver Code	Fatal Count	Injury Count	Injury Type	Lighting
I 057	70.59	201101413575	Fixed Object	Dry Clear	11 / 13 / 11 11 :00	V1 V2	South	Normal	Tractor With Semi-Trailer	Avoiding Vehicle/Objects	0	0	PD	Daylight
I 057	84.09	201101454078	Animal	Dry Clear	11 / 26 / 11 13 :00	V1 V2	South	Normal	Pickup	Straight Ahead	0	0	PD	Daylight
I 057	59.1	201101457847	Animal	Dry Clear	11 / 10 / 11 22 :00	V1 V2	North	Normal	Passenger	Straight Ahead	0	0	PD	Darkness
I 057	65.33	201101457852	Animal	Dry Clear	11 / 09 / 11 19 :00	V1 V2	South	Normal	Tractor With Semi-Trailer	Straight Ahead	0	0	PD	Darkness
I 057	71.14	201201010621	Animal	Dry Clear	01 / 01 / 12 14 :00	V1 V2	South	Normal	Passenger	Straight Ahead	0	0	PD	Daylight
I 057	59.12	201201010636	Animal	Dry Clear	01 / 01 / 12 04 :00	V1 V2	South	Normal	Passenger	Straight Ahead	0	0	PD	Darkness
I 057	82.2	201201010962	Animal	Dry Clear	01 / 03 / 12 08 :00	V1 V2	South	Normal	Passenger	Straight Ahead	0	0	PD	Daylight
I 057	75.15	201201013031	Fixed Object	Dry Clear	01 / 10 / 12 13 :00	V1 V2	South	Asleep/Fainted	Passenger	Straight Ahead	0	0	PD	Daylight
I 057	79.1	201201013077	Fixed Object	Wet Clear	01 / 12 / 12 20 :00	V1 V2	North	Normal	Tractor With Semi-Trailer	Straight Ahead	0	0	PD	Daylight
I 057	91.98	201201013079	Fixed Object	Snow or Slush Snow	01 / 12 / 12 19 :00	V1 V2	North	Normal	Pickup	Straight Ahead	0	0	PD	Darkness
I 057	60.08	201201014836	Sideswipe Same Direction	Dry Clear	01 / 15 / 12 23 :00	V1 V2	South South	Other/Unknown Normal	Pickup Tractor With Semi-Trailer	Changing Lanes Straight Ahead	0	0	PD	Darkness
I 057	70.54	201201018037	Fixed Object	Wet Clear	01 / 22 / 12 13 :00	V1 V2	South South	Normal Normal	Tractor With Semi-Trailer SUV	Changing Lanes Straight Ahead	0	0	PD	Daylight
I 057	82.54	201201018950	Sideswipe Same Direction	Wet Clear	01 / 26 / 12 10 :00	V1 V2	South South	Normal Normal	Pickup Tractor With Semi-Trailer	Passing/Overtaking Straight Ahead	0	0	PD	Daylight

ILLINOIS DEPARTMENT OF TRANSPORTATION

GIS Crash Report Details: 2010-2015 Crashes

I-57 Herrin Rd to I-64

Route	Mile	Case ID#	Collision Type	Surface /Weather	Crash Date Time		Direction	Driver Condition	Vehicle Type	Maneuver Code	Fatal Count	Injury Count	Injury Type	Lighting
I 057	91.98	201201019026	Fixed Object	Snow or Slush Snow	01 / 12 / 12 15 :00	V1 V2	North	Normal	Passenger	Straight Ahead	0	1	C-Injury	Daylight
I 057	81.13	201201019286	Fixed Object	Wet Rain	01 / 28 / 12 00 :00	V1 V2	North	Alcohol Impaired	Pickup	Skidding/Control Loss	0	0	PD	Darkness
I 057	69.09	201201022697	Animal	Dry Clear	02 / 07 / 12 02 :00	V1 V2	North	Normal	Van/Mini-Van	Straight Ahead	0	0	PD	Darkness
I 057	72.09	201201022698	Animal	Dry Clear	02 / 07 / 12 02 :00	V1 V2	North	Normal	Passenger	Straight Ahead	0	0	PD	Darkness
I 057	59.57	201201025733	Animal	Dry Clear	02 / 14 / 12 13 :00	V1 V2	South	Normal	Passenger	Straight Ahead	0	0	PD	Daylight
I 057	68.11	201201026353	Other Non-Collision	Snow or Slush Snow	02 / 13 / 12 21 :00	V1 V2	South	Normal	Passenger	Straight Ahead	0	1	C-Injury	Darkness
I 057	86.61	201201044757	Fixed Object	Dry Clear	02 / 24 / 12 21 :00	V1 V2	North	Normal	Passenger	Straight Ahead	0	4	A-Injury	Darkness
I 057	61.1	201201044768	Sideswipe Same Direction	Dry Clear	02 / 16 / 12 20 :00	V1 V2	North North	Normal Other/Unknown	Tractor With Semi-Trailer Passenger	Straight Ahead Other	0	1	A-Injury	Darkness
I 057	61.1	201201049149	Rear End	Dry Clear	02 / 29 / 12 09 :00	V1 V2	North North	Normal Normal	Pickup Tractor With Semi-Trailer	Straight Ahead Straight Ahead	0	0	PD	Daylight
I 057	71.38	201201049175	Rear End	Dry Clear	02 / 27 / 12 11 :00	V1 V2	South South	Normal Normal	Passenger SUV	Avoiding Vehicle/Objects Straight Ahead	0	0	PD	Daylight
I 057	73.5	201201053209	Fixed Object	Wet Clear	03 / 04 / 12 22 :00	V1 V2	North	Normal	Passenger	Straight Ahead	0	1	A-Injury	Darkness
I 057	65.08	201201054560	Sideswipe Same Direction	Dry Clear	03 / 11 / 12 12 :00	V1 V2	South South	Normal Normal	Tractor With Semi-Trailer Passenger	Straight Ahead Avoiding Vehicle/Objects	0	0	PD	Daylight

ILLINOIS DEPARTMENT OF TRANSPORTATION

GIS Crash Report Details: 2010-2015 Crashes

I-57 Herrin Rd to I-64

Route	Mile	Case ID#	Collision Type	Surface /Weather	Crash Date Time		Direction	Driver Condition	Vehicle Type	Maneuver Code	Fatal Count	Injury Count	Injury Type	Lighting
I 057	64.11	201201055190	Sideswipe Same Direction	Dry Clear	03 / 10 / 12 19 :00	V1 V2	North North	Fatigued Normal	Passenger SUV	Straight Ahead Straight Ahead	0	0	PD	Darkness
I 057	89.81	201201055798	Fixed Object	Dry Clear	03 / 12 / 12 14 :00	V1 V2	South	Normal	Passenger	Straight Ahead	0	0	PD	Daylight
I 057	80.11	201201058676	Animal	Dry Clear	03 / 14 / 12 09 :00	V1 V2	North	Normal	Van/Mini-Van	Straight Ahead	0	1	B-Injury	Daylight
I 057	69.11	201201060121	Other Object	Dry Clear	03 / 17 / 12 19 :00	V1 V2	North	Normal	Passenger	Straight Ahead	0	0	PD	Darkness
I 057	60.08	201201061358	Rear End	Dry Clear	03 / 07 / 12 08 :00	V1 V2	South South	Other/Unknown Normal	Passenger Tractor With Semi-Trailer	Straight Ahead Straight Ahead	0	1	A-Injury	Daylight
I 057	89.34	201201068434	Other Object	Wet Clear	03 / 25 / 12 07 :00	V1 V2	North North	Normal Normal	Truck Single Unit Passenger	Straight Ahead Straight Ahead	0	0	PD	Daylight
I 057	85.09	201201068468	Sideswipe Same Direction	Dry Clear	03 / 17 / 12 06 :00	V1 V2	South South	Normal Normal	Tractor Without Semi-Trailer Passenger	Straight Ahead Straight Ahead	0	0	PD	Darkness
I 057	64.14	201201069984	Angle	Wet Rain	03 / 22 / 12 11 :00	V1 V2	East South	Normal Normal	Pickup Tractor With Semi-Trailer	Slow/Stop - Left Turn Straight Ahead	0	1	A-Injury	Daylight
I 057	83.06	201201080315	Rear End	Dry Clear	04 / 01 / 12 16 :00	V1 V2	North North	Normal Normal	Passenger Truck Single Unit	Straight Ahead Straight Ahead	0	0	PD	Daylight
I 057	72.36	201201081441	Sideswipe Same Direction	Dry Clear	04 / 05 / 12 22 :00	V1 V2	North North	Normal Other/Unknown	Passenger Tractor With Semi-Trailer	Straight Ahead Straight Ahead	0	4	B-Injury	Darkness
I 057	74.14	201201081775	Animal	Dry Clear	04 / 02 / 12 01 :00	V1 V2	North	Normal	Van/Mini-Van	Straight Ahead	0	0	PD	Darkness
I 057	76.09	201201085938	Fixed Object	Dry Clear	04 / 10 / 12 07 :00	V1 V2	North	Asleep/Fainted	Passenger	Straight Ahead	0	0	PD	Daylight

ILLINOIS DEPARTMENT OF TRANSPORTATION

GIS Crash Report Details: 2010-2015 Crashes

I-57 Herrin Rd to I-64

Route	Mile	Case ID#	Collision Type	Surface /Weather	Crash Date Time		Direction	Driver Condition	Vehicle Type	Maneuver Code	Fatal Count	Injury Count	Injury Type	Lighting
I 057	73.12	201201087976	Other Non-Collision	Dry Clear	03 / 03 / 12 10 :00	V1 V2	North North	Other/Unknown Normal	Tractor With Semi-Trailer Passenger	Unknown Straight Ahead	0	0	PD	Daylight
I 057	68.99	201201089286	Rear End	Dry Clear	04 / 11 / 12 11 :00	V1 V2	South South	Normal Normal	Passenger Van/Mini-Van	Straight Ahead Straight Ahead	0	3	B-Injury	Daylight
I 057	90.11	201201089349	Rear End	Dry Clear	04 / 12 / 12 18 :00	V1 V2	North North	Normal Normal	Passenger Passenger	Slow/Stop In Traffic Slow/Stop In Traffic	0	0	PD	Daylight
I 057	63.11	201201089350	Animal	Dry Clear	04 / 12 / 12 19 :00	V1 V2	South	Normal	Passenger	Straight Ahead	0	0	PD	Darkness
I 057	67.1	201201094269	Rear End	Dry Clear	04 / 11 / 12 17 :00	V1 V2	South South	Normal Normal	Van/Mini-Van Tractor With Semi-Trailer	Straight Ahead Slow/Stop In Traffic	0	1	A-Injury	Daylight
I 057	61.1	201201094272	Animal	Dry Clear	04 / 18 / 12 19 :00	V1 V2	North	Normal	SUV	Straight Ahead	0	0	PD	Darkness
I 057	78.06	201201098708	Fixed Object	Dry Clear	04 / 15 / 12 12 :00	V1 V2	North	Normal	Passenger	Skidding/Control Loss	0	0	PD	Daylight
I 057	65.08	201201100908	Other Object	Dry Clear	04 / 25 / 12 02 :00	V1 V2	North North	Normal Normal	Passenger Tractor With Semi-Trailer	Straight Ahead Straight Ahead	0	0	PD	Darkness, Lighted Road
I 057	76.1	201201101077	Animal	Dry Clear	04 / 22 / 12 04 :00	V1 V2	South	Normal	Passenger	Straight Ahead	0	0	PD	Darkness
I 057	59.1	201201101078	Fixed Object	Dry Clear	03 / 29 / 12 16 :00	V1 V2	South	Normal	Passenger	Straight Ahead	0	0	PD	Daylight
I 057	92.02	201201101140	Sideswipe Same Direction	Dry Clear	04 / 08 / 12 17 :00	V1 V2	North North	Other/Unknown Normal	Passenger Passenger	Passing/Overtaking Straight Ahead	0	0	PD	Daylight
I 057	66.19	201201101320	Sideswipe Same Direction	Dry Clear	04 / 28 / 12 10 :00	V1 V2	North North	Normal Normal	Truck Single Unit Passenger	Changing Lanes Slow/Stop In Traffic	0	0	PD	Daylight

ILLINOIS DEPARTMENT OF TRANSPORTATION

GIS Crash Report Details: 2010-2015 Crashes

I-57 Herrin Rd to I-64

Route	Mile	Case ID#	Collision Type	Surface /Weather	Crash Date Time		Direction	Driver Condition	Vehicle Type	Maneuver Code	Fatal Count	Injury Count	Injury Type	Lighting
I 057	63.92	201201106095	Rear End	Dry Clear	05 / 03 / 12 14 :00	V1 V2	North North	Normal Normal	Passenger Tractor With Semi-Trailer	Starting In Traffic Slow/Stop In Traffic	0	1	B-Injury	Daylight
I 057	78.66	201201106110	Fixed Object	Dry Clear	04 / 27 / 12 08 :00	V1 V2	South	Normal	Passenger	Skidding/Control Loss	0	0	PD	Daylight
I 057	76.08	201201107388	Other Object	Dry Clear	05 / 03 / 12 13 :00	V1 V2	North North	Normal Normal	Tractor With Semi-Trailer Passenger	Straight Ahead Straight Ahead	0	0	PD	Daylight
I 057	73.11	201201111876	Animal	Dry Clear	05 / 06 / 12 00 :00	V1 V2	South	Normal	Tractor With Semi-Trailer	Straight Ahead	0	0	PD	Darkness
I 057	91.98	201201114575	Animal	Dry Clear	05 / 06 / 12 02 :00	V1 V2	North	Normal	Passenger	Straight Ahead	0	0	PD	Darkness, Lighted Road
I 057	90.11	201201114742	Rear End	Dry Clear	05 / 13 / 12 17 :00	V1 V2	North North	Normal Normal	SUV Van/Mini-Van	Straight Ahead Slow/Stop In Traffic	0	0	PD	Daylight
I 057	65.47	201201125153	Rear End	Dry Clear	05 / 24 / 12 15 :00	V1 V2	North North	Normal Normal	Tractor With Semi-Trailer Pickup	Straight Ahead Slow/Stop In Traffic	0	0	PD	Daylight
I 057	61.1	201201127032	Rear End	Dry Clear	05 / 10 / 12 22 :00	V1 V2	North North	Normal Normal	Passenger Van/Mini-Van	Straight Ahead Straight Ahead	0	1	B-Injury	Darkness
I 057	69.44	201201127549	Animal	Dry Clear	05 / 23 / 12 05 :00	V1 V2	South	Normal	Tractor With Semi-Trailer	Straight Ahead	0	0	PD	Dawn
I 057	68.11	201201128743	Other Object	Dry Clear	05 / 25 / 12 15 :00	V1 V2	South South	Normal Normal	Tractor With Semi-Trailer SUV	Straight Ahead Straight Ahead	0	0	PD	Daylight
I 057	88.11	201201128778	Animal	Dry Clear	05 / 26 / 12 05 :00	V1 V2	South	Normal	Passenger	Straight Ahead	0	0	PD	Darkness
I 057	63.52	201201128815	Rear End	Dry Clear	05 / 26 / 12 14 :00	V1 V2	South South	Normal Normal	Other Vehicle With Trailer Passenger	Straight Ahead Straight Ahead	0	1	B-Injury	Daylight
I 057	91.98	201201131881	Sideswipe Same Direction	Dry Clear	05 / 15 / 12 21 :00	V1 V2	South South	Normal Normal	Tractor With Semi-Trailer Passenger	Changing Lanes Straight Ahead	0	0	PD	Darkness

ILLINOIS DEPARTMENT OF TRANSPORTATION

GIS Crash Report Details: 2010-2015 Crashes

I-57 Herrin Rd to I-64

Route	Mile	Case ID#	Collision Type	Surface /Weather	Crash Date Time		Direction	Driver Condition	Vehicle Type	Maneuver Code	Fatal Count	Injury Count	Injury Type	Lighting
I 057	70.08	201201132091	Other Non-Collision	Dry Clear	05 / 07 / 12 21 :00	V1 V2	North	Normal	Pickup	Straight Ahead	0	0	PD	Darkness
I 057	91.26	201201136053	Rear End	Dry Clear	06 / 03 / 12 17 :00	V1 V2	North North	Normal Normal	Tractor With Semi-Trailer Passenger	Straight Ahead Slow/Stop In Traffic	0	2	A-Injury	Daylight
I 057	84.08	201201136057	Animal	Dry Clear	06 / 03 / 12 04 :00	V1 V2	South	Normal	Passenger	Straight Ahead	0	0	PD	Darkness
I 057	59.1	201201136060	Animal	Dry Clear	05 / 25 / 12 19 :00	V1 V2	South	Normal	Pickup	Straight Ahead	0	0	PD	Daylight
I 057	87.48	201201137968	Animal	Dry Clear	06 / 05 / 12 21 :00	V1 V2	North	Normal	Tractor With Semi-Trailer	Straight Ahead	0	0	PD	Darkness
I 057	91.87	201201138590	Rear End	Dry Clear	06 / 08 / 12 16 :00	V1 V2	North North	Normal Normal	Van/Mini-Van Pickup	Slow/Stop In Traffic Slow/Stop In Traffic	0	0	PD	Daylight
I 057	64.86	201201139249	Fixed Object	Dry Clear	06 / 03 / 12 08 :00	V1 V2	North	Asleep/Fainted	Passenger	Changing Lanes	0	1	B-Injury	Daylight
I 057	59.1	201201139254	Rear End	Dry Clear	06 / 08 / 12 07 :00	V1 V2	North North	Other/Unknown Normal	Tractor With Semi-Trailer Passenger	Changing Lanes Straight Ahead	0	0	PD	Daylight
I 057	89.36	201201139889	Fixed Object	Snow or Slush Snow	01 / 12 / 12 18 :00	V1 V2	North	Normal	Pickup	Skidding/Control Loss	0	0	PD	Darkness
I 057	87.11	201201139890	Fixed Object	Snow or Slush Snow	01 / 12 / 12 18 :00	V1 V2	North	Normal	Pickup	Skidding/Control Loss	0	0	PD	Darkness
I 057	91.26	201201139891	Other Non-Collision	Snow or Slush Snow	01 / 12 / 12 19 :00	V1 V2	North	Normal	Pickup	Straight Ahead	0	0	PD	Darkness
I 057	63.11	201201141817	Animal	Dry Clear	06 / 09 / 12 14 :00	V1 V2	South	Normal	Passenger	Straight Ahead	0	0	PD	Daylight
I 057	89.11	201201146251	Fixed Object	Snow	01 / 12 / 12 19 :00	V1 V2	South	Normal	SUV	Skidding/Control Loss	0	0	PD	Darkness

ILLINOIS DEPARTMENT OF TRANSPORTATION

GIS Crash Report Details: 2010-2015 Crashes

I-57 Herrin Rd to I-64

Route	Mile	Case ID#	Collision Type	Surface /Weather	Crash Date Time		Direction	Driver Condition	Vehicle Type	Maneuver Code	Fatal Count	Injury Count	Injury Type	Lighting
I 057	83.06	201201152982	Sideswipe Same Direction	Dry Clear	06 / 13 / 12 10 :00	V1 V2	South South	Asleep/Fainted Normal	Passenger Tractor With Semi-Trailer	Skidding/Control Loss Straight Ahead	0	1	B-Injury	Daylight
I 057	65.36	201201156225	Overturned	Dry Clear	06 / 12 / 12 13 :00	V1 V2	South South	Normal Normal	Tractor With Semi-Trailer Pickup	Avoiding Vehicle/Objects Straight Ahead	0	1	C-Injury	Daylight
I 057	77.12	201201158541	Fixed Object	Dry Clear	06 / 17 / 12 22 :00	V1 V2	North	Normal	Passenger	Skidding/Control Loss	0	0	PD	Darkness
I 057	75.09	201201158907	Overturned	Dry Clear	06 / 19 / 12 02 :00	V1 V2	North	Normal	Passenger	Straight Ahead	0	0	PD	Darkness
I 057	89.11	201201160101	Fixed Object	Dry Clear	06 / 22 / 12 14 :00	V1 V2	South	Illness	Passenger	Straight Ahead	0	1	B-Injury	Daylight
I 057	67.94	201201161172	Sideswipe Same Direction	Dry Clear	07 / 11 / 12 17 :00	V1 V2	South South	Normal Normal	Tractor With Semi-Trailer Passenger	Straight Ahead Straight Ahead	0	0	PD	Daylight
I 057	91.77	201201163874	Rear End	Dry Clear	06 / 27 / 12 14 :00	V1 V2	Unknown North	Other/Unknown Normal	Unknown Passenger	Unknown Straight Ahead	0	0	PD	Daylight
I 057	85.6	201201167994	Overturned	Dry Clear	06 / 21 / 12 15 :00	V1 V2	South	Drug Impaired	Passenger	Straight Ahead	0	1	A-Injury	Daylight
I 057	62.1	201201177169	Animal	Dry Clear	07 / 05 / 12 20 :00	V1 V2	North	Normal	Passenger	Straight Ahead	0	0	PD	Darkness
I 057	59.1	201201179818	Animal	Dry Clear	04 / 12 / 12 19 :00	V1 V2	South	Normal	SUV	Straight Ahead	0	0	PD	Dusk
I 057	71.14	201201183227	Fixed Object	Dry Clear	07 / 07 / 12 05 :00	V1 V2	North	Asleep/Fainted	Passenger	Skidding/Control Loss	0	0	PD	Dawn
I 057	74.4	201201184235	Other Non-Collision	Dry Clear	07 / 11 / 12 03 :00	V1 V2	South	Normal	Passenger	Straight Ahead	0	0	PD	Darkness
I 057	64.61	201201184476	Sideswipe Same Direction	Dry Clear	07 / 11 / 12 18 :00	V1 V2	Unknown South	Other/Unknown Normal	Pickup SUV	Unknown Straight Ahead	0	0	PD	Daylight

ILLINOIS DEPARTMENT OF TRANSPORTATION

GIS Crash Report Details: 2010-2015 Crashes

I-57 Herrin Rd to I-64

Route	Mile	Case ID#	Collision Type	Surface /Weather	Crash Date Time		Direction	Driver Condition	Vehicle Type	Maneuver Code	Fatal Count	Injury Count	Injury Type	Lighting
I 057	61.6	201201187024	Rear End	Dry Clear	07 / 20 / 12 11 :00	V1 V2	North North	Normal Normal	Passenger Van/Mini-Van	Straight Ahead Slow/Stop In Traffic	0	0	PD	Daylight
I 057	88.11	201201187107	Rear End	Dry Clear	07 / 20 / 12 15 :00	V1 V2	North North	Normal Normal	Passenger Tractor With Semi-Trailer	Skidding/Control Loss Slow/Stop In Traffic	0	1	A-Injury	Daylight
I 057	72.09	201201190446	Other Non-Collision	Dry Clear	07 / 24 / 12 12 :00	V1 V2	South	Normal	Tractor With Semi-Trailer	Slow/Stop In Traffic	0	0	PD	Daylight
I 057	71.43	201201191053	Fixed Object	Dry Clear	08 / 07 / 12 19 :00	V1 V2	South	Normal	Tractor With Semi-Trailer	Straight Ahead	0	0	PD	Daylight
I 057	91.98	201201192089	Sideswipe Same Direction	Dry Clear	04 / 24 / 12 12 :00	V1 V2	North North	Other/Unknown Other/Unknown	Tractor With Semi-Trailer Pickup	Changing Lanes Straight Ahead	0	0	PD	Daylight
I 057	71.14	201201193761	Rear End	Dry Clear	07 / 26 / 12 05 :00	V1 V2	South South	Normal Normal	Passenger Pickup	Straight Ahead Slow/Stop In Traffic	0	2	B-Injury	Daylight
I 057	86.1	201201201359	Sideswipe Same Direction	Dry Clear	05 / 07 / 12 13 :00	V1 V2	North North	Other/Unknown Normal	Unknown SUV	Straight Ahead Straight Ahead	0	0	PD	Daylight
I 057	69.96	201201201665	Overturned	Dry Clear	07 / 28 / 12 18 :00	V1 V2	South	Normal	SUV	Straight Ahead	0	1	B-Injury	Daylight
I 057	66.6	201201203003	Animal	Dry Clear	08 / 26 / 12 21 :00	V1 V2	South	Normal	Passenger	Straight Ahead	0	0	PD	Darkness
I 057	91.59	201201211883	Rear End	Dry Clear	08 / 29 / 12 23 :00	V1 V2	South South	Normal Normal	Tractor With Semi-Trailer Passenger	Straight Ahead Straight Ahead	0	0	PD	Darkness
I 057	76.41	201201211885	Sideswipe Same Direction	Dry Clear	08 / 30 / 12 16 :00	V1 V2	South South	Normal Normal	Passenger SUV	Avoiding Vehicle/Objects Straight Ahead	0	0	PD	Daylight
I 057	91.56	201201211916	Sideswipe Same Direction	Dry Clear	05 / 20 / 12 13 :00	V1 V2	North North	Normal Normal	Passenger Tractor With Semi-Trailer	Changing Lanes Straight Ahead	0	0	PD	Daylight

ILLINOIS DEPARTMENT OF TRANSPORTATION

GIS Crash Report Details: 2010-2015 Crashes

I-57 Herrin Rd to I-64

Route	Mile	Case ID#	Collision Type	Surface /Weather	Crash Date Time		Direction	Driver Condition	Vehicle Type	Maneuver Code	Fatal Count	Injury Count	Injury Type	Lighting
I 057	70.1	201201235481	Sideswipe Same Direction	Dry Clear	08 / 14 / 12 17 :00	V1 V2	North North	Normal Normal	Pickup Van/Mini-Van	Straight Ahead Straight Ahead	0	0	PD	Daylight
I 057	79.9	201201252156	Animal	Dry Clear	10 / 12 / 12 18 :00	V1 V2	South	Normal	SUV	Straight Ahead	0	0	PD	Darkness
I 057	61.06	201201252159	Animal	Dry Clear	10 / 19 / 12 19 :00	V1 V2	North	Normal	Passenger	Straight Ahead	0	0	PD	Darkness
I 057	70.61	201201253260	Sideswipe Same Direction	Dry Clear	10 / 03 / 12 07 :00	V1 V2	North North	Normal Normal	Tractor With Semi-Trailer Passenger	Changing Lanes Straight Ahead	0	0	PD	Daylight
I 057	91.35	201201253737	Sideswipe Same Direction	Dry Clear	08 / 31 / 12 18 :00	V1 V2	South South	Other/Unknown Normal	Pickup SUV	Passing/Overtaking Straight Ahead	0	0	PD	Daylight
I 057	65.34	201201256476	Animal	Wet Rain	09 / 02 / 12 07 :00	V1 V2	North	Normal	Pickup	Straight Ahead	0	0	PD	Daylight
I 057	87.11	201201257091	Overturned	Dry Clear	09 / 03 / 12 16 :00	V1 V2	North	Normal	Passenger	Skidding/Control Loss	0	0	PD	Daylight
I 057	74.74	201201262230	Animal	Dry Clear	10 / 28 / 12 19 :00	V1 V2	South	Normal	Passenger	Straight Ahead	0	0	PD	Darkness
I 057	87.24	201201265236	Animal	Dry Clear	10 / 18 / 12 22 :00	V1 V2	North	Normal	Passenger	Straight Ahead	0	0	PD	Darkness
I 057	59.8	201201268890	Animal	Dry Fog/Smoke/Haze	11 / 06 / 12 22 :00	V1 V2	South	Normal	Passenger	Straight Ahead	0	0	PD	Darkness
I 057	87.11	201201269877	Fixed Object	Dry Clear	11 / 13 / 12 08 :00	V1 V2	South	Normal	Tractor With Semi-Trailer	Straight Ahead	0	0	PD	Daylight
I 057	63.03	201201279997	Fixed Object	Dry Clear	11 / 18 / 12 22 :00	V1 V2	North	Illness	Passenger	Straight Ahead	0	1	A-Injury	Darkness
I 057	64.8	201201282864	Sideswipe Same Direction	Dry Clear	09 / 26 / 12 10 :00	V1 V2	North North	Normal Normal	Passenger Tractor With Semi-Trailer	Changing Lanes Avoiding Vehicle/Objects	0	0	PD	Daylight

ILLINOIS DEPARTMENT OF TRANSPORTATION

GIS Crash Report Details: 2010-2015 Crashes

I-57 Herrin Rd to I-64

Route	Mile	Case ID#	Collision Type	Surface /Weather	Crash Date Time		Direction	Driver Condition	Vehicle Type	Maneuver Code	Fatal Count	Injury Count	Injury Type	Lighting
I 057	69.11	201201282982	Animal	Dry Clear	07 / 29 / 12 13 :00	V1 V2	South	Normal	Pickup	Straight Ahead	0	0	PD	Daylight
I 057	71.85	201201286754	Animal	Dry Clear	10 / 28 / 12 19 :00	V1 V2	North	Normal	SUV	Straight Ahead	0	0	PD	Daylight
I 057	87.53	201201286803	Animal	Dry Clear	10 / 30 / 12 02 :00	V1 V2	North	Normal	Tractor With Semi-Trailer	Straight Ahead	0	0	PD	Darkness
I 057	73.35	201201286807	Animal	Dry Clear	10 / 30 / 12 04 :00	V1 V2	North	Normal	Passenger	Straight Ahead	0	0	PD	Darkness
I 057	83.06	201201287689	Overturned	Dry Clear	10 / 01 / 12 05 :00	V1 V2	South	Normal	Passenger	Negotiating A Curve	0	2	A-Injury	Darkness
I 057	72.61	201201290945	Rear End	Dry Clear	11 / 15 / 12 12 :00	V1 V2	South South	Other/Unknown Normal	Passenger Tractor With Semi-Trailer	Avoiding Vehicle/Objects Slow/Stop In Traffic	0	1	B-Injury	Daylight
I 057	65.08	201201292378	Animal	Dry Clear	10 / 04 / 12 06 :00	V1 V2	South	Normal	Tractor With Semi-Trailer	Straight Ahead	0	0	PD	Darkness
I 057	78.06	201201293508	Animal	Dry Clear	10 / 05 / 12 05 :00	V1 V2	North	Normal	Tractor With Semi-Trailer	Straight Ahead	0	0	PD	Darkness
I 057	71.61	201201294616	Animal	Dry Clear	10 / 06 / 12 23 :00	V1 V2	North	Normal	Passenger	Straight Ahead	0	0	PD	Darkness
I 057	86.1	201201294978	Animal	Dry Clear	10 / 07 / 12 19 :00	V1 V2	North	Normal	Passenger	Straight Ahead	0	0	PD	Darkness
I 057	68.11	201201296051	Animal	Dry Clear	10 / 09 / 12 21 :00	V1 V2	South	Normal	Passenger	Straight Ahead	0	0	PD	Darkness
I 057	68.11	201201297442	Animal	Dry Clear	10 / 09 / 12 21 :00	V1 V2	North	Normal	Truck Single Unit	Straight Ahead	0	0	PD	Darkness
I 057	78.06	201201299809	Sideswipe Same Direction	Dry Clear	10 / 19 / 12 16 :00	V1 V2	South South	Normal Other/Unknown	Passenger Tractor With	Straight Ahead Changing Lanes	0	0	PD	Daylight

ILLINOIS DEPARTMENT OF TRANSPORTATION

GIS Crash Report Details: 2010-2015 Crashes

I-57 Herrin Rd to I-64

Route	Mile	Case ID#	Collision Type	Surface /Weather	Crash Date Time		Direction	Driver Condition	Vehicle Type	Maneuver Code	Fatal Count	Injury Count	Injury Type	Lighting
				Clear					Semi-Trailer					
I 057	73.66	201201299842	Sideswipe Same Direction	Dry Clear	10 / 19 / 12 17 :00	V1 V2	North North	Normal Normal	Tractor With Semi-Trailer Passenger	Changing Lanes Straight Ahead	0	0	PD	Daylight
I 057	75.09	201201299903	Animal	Dry Clear	10 / 19 / 12 18 :00	V1 V2	North	Normal	Pickup	Straight Ahead	0	0	PD	Darkness
I 057	61.21	201201299985	Animal		10 / 19 / 12 23 :00	V1 V2	North	Other/Unknown	Pickup	Unknown	0	0	PD	
I 057	88.11	201201300380	Animal	Dry Clear	10 / 20 / 12 20 :00	V1 V2	South	Normal	Passenger	Straight Ahead	0	1	B-Injury	Darkness
I 057	85.09	201201301386	Sideswipe Same Direction	Wet Clear	10 / 23 / 12 20 :00	V1 V2	North North	Normal Normal	Tractor With Semi-Trailer Tractor With Semi-Trailer	Passing/Overtaking Straight Ahead	0	0	PD	Darkness
I 057	64.11	201201303598	Animal	Dry Clear	10 / 27 / 12 22 :00	V1 V2	North	Normal	Tractor With Semi-Trailer	Straight Ahead	0	0	PD	Darkness
I 057	68.09	201201303657	Animal	Dry Clear	10 / 28 / 12 00 :00	V1 V2	South	Normal	Passenger	Straight Ahead	0	0	PD	Darkness
I 057	60.29	201201303697	Animal	Dry Clear	10 / 28 / 12 01 :00	V1 V2	South	Normal	Passenger	Straight Ahead	0	0	PD	Darkness
I 057	88.01	201201304548	Animal	Dry Clear	10 / 29 / 12 03 :00	V1 V2	South	Normal	Passenger	Straight Ahead	0	0	PD	Darkness
I 057	91.49	201201307138	Sideswipe Same Direction	Dry Clear	10 / 31 / 12 10 :00	V1 V2	North North	Other/Unknown Normal	Pickup Tractor With Semi-Trailer	Changing Lanes Straight Ahead	0	0	PD	Daylight
I 057	69.61	201201313744	Animal	Dry Clear	11 / 09 / 12 04 :00	V1 V2	North	Normal	Passenger	Straight Ahead	0	0	PD	Darkness
I 057	62.12	201201314364	Animal	Dry Clear	10 / 28 / 12 02 :00	V1 V2	North	Normal	SUV	Straight Ahead	0	1	B-Injury	Darkness

ILLINOIS DEPARTMENT OF TRANSPORTATION

GIS Crash Report Details: 2010-2015 Crashes

I-57 Herrin Rd to I-64

Route	Mile	Case ID#	Collision Type	Surface /Weather	Crash Date Time		Direction	Driver Condition	Vehicle Type	Maneuver Code	Fatal Count	Injury Count	Injury Type	Lighting
I 057	71.12	201201314365	Animal	Dry Clear	10 / 28 / 12 00 :00	V1 V2	North	Normal	Passenger	Straight Ahead	0	0	PD	Darkness
I 057	85.09	201201315231	Animal	Dry Clear	11 / 13 / 12 03 :00	V1 V2	South	Normal	Tractor With Semi-Trailer	Straight Ahead	0	0	PD	Darkness
I 057	70.21	201201315456	Sideswipe Same Direction	Dry Clear	11 / 13 / 12 15 :00	V1 V2	North North	Normal Normal	Passenger Van/Mini-Van	Straight Ahead Changing Lanes	0	0	PD	Daylight
I 057	65.1	201201315687	Animal	Dry Clear	11 / 14 / 12 07 :00	V1 V2	South	Normal	Passenger	Straight Ahead	0	1	C-Injury	Daylight
I 057	87.11	201201317380	Animal	Dry Clear	11 / 18 / 12 18 :00	V1 V2	North	Normal	SUV	Straight Ahead	0	0	PD	Darkness
I 057	80.66	201201317391	Other Object	Dry Clear	11 / 18 / 12 18 :00	V1 V2	N/A South	N/A Normal	N/A Passenger	N/A Straight Ahead	0	0	PD	Darkness
I 057	91.59	201201317413	Other Non-Collision	Dry Clear	11 / 18 / 12 20 :00	V1 V2	South	Normal	Tractor With Semi-Trailer	Changing Lanes	0	0	PD	Darkness
I 057	87.11	201201317570	Fixed Object	Dry Clear	11 / 19 / 12 13 :00	V1 V2	N/A North	N/A Normal	N/A Passenger	N/A Avoiding Vehicle/Objects	0	0	PD	Daylight
I 057	74.16	201201320646	Overturned	Dry Clear	11 / 29 / 12 06 :00	V1 V2	South	Alcohol Impaired	Passenger	Skidding/Control Loss	0	1	A-Injury	Dawn
I 057	60.08	201201321236	Rear End	Dry Clear	12 / 01 / 12 02 :00	V1 V2	North North	Other/Unknown Normal	Pickup Tractor With Semi-Trailer	Straight Ahead Straight Ahead	0	1	A-Injury	Darkness
I 057	66.59	201201322505	Fixed Object	Dry Clear	12 / 05 / 12 09 :00	V1 V2	North	Normal	Passenger	Unknown	0	0	PD	Daylight
I 057	78.06	201201323851	Animal	Dry Clear	12 / 08 / 12 00 :00	V1 V2	South	Normal	Passenger	Straight Ahead	0	0	PD	Darkness
I 057	90.09	201201325690	Sideswipe Same Direction	Dry Clear	12 / 11 / 12 13 :00	V1 V2	South South	Normal Normal	Tractor With Semi-Trailer Passenger	Straight Ahead Straight Ahead	0	1	C-Injury	Daylight

ILLINOIS DEPARTMENT OF TRANSPORTATION

GIS Crash Report Details: 2010-2015 Crashes

I-57 Herrin Rd to I-64

Route	Mile	Case ID#	Collision Type	Surface /Weather	Crash Date Time		Direction	Driver Condition	Vehicle Type	Maneuver Code	Fatal Count	Injury Count	Injury Type	Lighting
I 057	59.15	201201331829	Sideswipe Same Direction	Wet Rain	12 / 09 / 12 17 :00	V1 V2	North North	Normal Normal	Passenger Tractor With Semi-Trailer	Merging Changing Lanes	0	1	C-Injury	Darkness
I 057	74.2	201201334771	Animal	Dry Clear	10 / 24 / 12 04 :00	V1 V2	South	Normal	Pickup	Straight Ahead	0	0	PD	Darkness
I 057	60.08	201201334777	Animal	Wet Rain	11 / 05 / 12 19 :00	V1 V2	South	Normal	Passenger	Straight Ahead	0	0	PD	Darkness
I 057	73.11	201201334787	Animal	Dry Clear	11 / 14 / 12 01 :00	V1 V2	North	Normal	Van/Mini-Van	Straight Ahead	0	0	PD	Darkness
I 057	73.11	201201335404	Animal	Dry Clear	12 / 22 / 12 04 :00	V1 V2	North	Normal	Passenger	Straight Ahead	0	0	PD	Darkness
I 057	80.11	201201336178	Rear End	Dry Clear	12 / 24 / 12 03 :00	V1 V2	North North	Other/Unknown Normal	Tractor With Semi-Trailer Passenger	Straight Ahead Straight Ahead	0	0	PD	Darkness
I 057	85.09	201201336365	Fixed Object	Dry Clear	12 / 24 / 12 21 :00	V1 V2	South	Normal	Pickup	Skidding/Control Loss	0	0	PD	Darkness
I 057	75.6	201201336425	Animal	Dry Clear	12 / 25 / 12 07 :00	V1 V2	South	Normal	SUV	Straight Ahead	0	0	PD	Daylight
I 057	59.1	201201336636	Fixed Object	Snow or Slush Snow	12 / 26 / 12 11 :00	V1 V2	South	Normal	Passenger	Straight Ahead	0	0	PD	Daylight
I 057	58.96	201201338192	Fixed Object	Wet Snow	12 / 29 / 12 08 :00	V1 V2	South	Normal	Tractor With Semi-Trailer	Straight Ahead	0	1	C-Injury	Daylight
I 057	75.09	201201343483	Sideswipe Same Direction	Dry Clear	12 / 12 / 12 22 :00	V1 V2	Unknown North	Other/Unknown Normal	Unknown Passenger	Unknown Straight Ahead	0	0	PD	Darkness
I 057	76.1	201201351389	Fixed Object	Dry Clear	09 / 08 / 12 10 :00	V1 V2	South	Normal	Passenger	Straight Ahead	0	0	PD	Daylight
I 057	72.09	201201397148	Animal	Clear	11 / 03 / 12 00 :00	V1 V2	South	Other/Unknown	Other	Straight Ahead	0	0	PD	Darkness

ILLINOIS DEPARTMENT OF TRANSPORTATION

GIS Crash Report Details: 2010-2015 Crashes

I-57 Herrin Rd to I-64

Route	Mile	Case ID#	Collision Type	Surface /Weather	Crash Date Time		Direction	Driver Condition	Vehicle Type	Maneuver Code	Fatal Count	Injury Count	Injury Type	Lighting
I 057	71.11	201201398337	Animal	Wet Rain	11 / 05 / 12 18 :00	V1 V2	North	Normal	SUV	Straight Ahead	0	1	C-Injury	Darkness
I 057	92.01	201201405430	Sideswipe Same Direction	Dry Clear	11 / 13 / 12 11 :00	V1 V2	North North	Other/Unknown Normal	Unknown Passenger	Passing/Overtaking Straight Ahead	0	0	PD	Daylight
I 057	84.59	201201405450	Animal	Clear	11 / 13 / 12 07 :00	V1 V2	North	Normal	Passenger	Straight Ahead	0	0	PD	Daylight
I 057	71.14	201201407706	Rear End	Dry Clear	11 / 16 / 12 11 :00	V1 V2	South South	Normal Normal	Passenger SUV	Slow/Stop In Traffic Slow/Stop In Traffic	0	0	PD	Daylight
I 057	83.06	201201409752	Other Non-Collision	Dry Clear	11 / 19 / 12 10 :00	V1 V2	North	Normal	Passenger	Straight Ahead	0	0	PD	Daylight
I 057	83.57	201201412524	Fixed Object	Dry Clear	11 / 23 / 12 13 :00	V1 V2	South	Asleep/Fainted	Passenger	Passing/Overtaking	0	1	B-Injury	Daylight
I 057	83.06	201201434667	Overturned	Dry Clear	12 / 22 / 12 21 :00	V1 V2	North	Drug Impaired	Passenger	Skidding/Control Loss	0	4	A-Injury	Darkness
I 057	62.1	201301013194	Overturned	Wet Clear	01 / 10 / 13 17 :00	V1 V2	North	Illness	Passenger	Straight Ahead	0	1	A-Injury	Darkness
I 057	63.11	201301014990	Animal	Wet Rain	01 / 13 / 13 08 :00	V1 V2	South	Normal	Passenger	Straight Ahead	0	0	PD	Daylight
I 057	77.74	201301015052	Fixed Object	Ice Sleet/Hail	01 / 13 / 13 11 :00	V1 V2	North North	Normal Normal	SUV Tractor With Semi-Trailer	Merging Straight Ahead	0	0	PD	Daylight
I 057	69.21	201301016376	Animal	Dry Clear	01 / 14 / 13 17 :00	V1 V2	North	Normal	Passenger	Straight Ahead	0	0	PD	Darkness
I 057	70.1	201301017135	Fixed Object	Dry Clear	01 / 15 / 13 19 :00	V1 V2	South	Normal	Passenger	Skidding/Control Loss	0	0	PD	Darkness
I 057	72.8	201301017784	Animal	Dry Clear	01 / 17 / 13 08 :00	V1 V2	North	Normal	Passenger	Straight Ahead	0	0	PD	Daylight

ILLINOIS DEPARTMENT OF TRANSPORTATION

GIS Crash Report Details: 2010-2015 Crashes

I-57 Herrin Rd to I-64

Route	Mile	Case ID#	Collision Type	Surface /Weather	Crash Date Time		Direction	Driver Condition	Vehicle Type	Maneuver Code	Fatal Count	Injury Count	Injury Type	Lighting
I 057	91.86	201301022634	Other Object	Dry Clear	01 / 25 / 13 17 :00	V1 V2	N/A South	N/A Normal	N/A Van/Mini-Van	N/A Avoiding Vehicle/Objects	0	0	PD	Darkness
I 057	67.1	201301022863	Fixed Object	Ice Sleet/Hail	01 / 27 / 13 07 :00	V1 V2	North	Normal	Pickup	Skidding/Control Loss	0	0	PD	Daylight
I 057	67	201301022870	Fixed Object	Ice Rain	01 / 27 / 13 08 :00	V1 V2	North	Normal	Passenger	Skidding/Control Loss	0	0	PD	Daylight
I 057	68.11	201301025347	Fixed Object	Dry Snow	01 / 31 / 13 18 :00	V1 V2	North North	Normal Normal	Passenger Passenger	Straight Ahead Straight Ahead	0	1	B-Injury	Darkness
I 057	63.86	201301025359	Rear End	Wet Clear	01 / 31 / 13 19 :00	V1 V2	North North	Normal Normal	Pickup Passenger	Straight Ahead Slow/Stop In Traffic	0	0	PD	Darkness
I 057	72.95	201301029467	Sideswipe Same Direction	Wet Clear	02 / 04 / 13 14 :00	V1 V2	South South	Other/Unknown Normal	Passenger Tractor With Semi-Trailer	Changing Lanes Straight Ahead	0	1	B-Injury	Daylight
I 057	59.1	201301030491	Sideswipe Same Direction	Dry Clear	04 / 04 / 13 10 :00	V1 V2	South South	Normal Other/Unknown	Passenger Pickup	Straight Ahead Unknown	0	0	PD	Daylight
I 057	79.1	201301030896	Animal	Dry Clear	02 / 05 / 13 17 :00	V1 V2	South	Normal	Passenger	Straight Ahead	0	0	PD	Darkness
I 057	80.11	201301031397	Sideswipe Same Direction	Dry Clear	04 / 21 / 13 20 :00	V1 V2	South South	Normal Normal	Passenger Tractor With Semi-Trailer	Straight Ahead Straight Ahead	0	0	PD	Darkness
I 057	63.92	201301038566	Fixed Object	Dry Clear	01 / 04 / 13 14 :00	V1 V2	North	Normal	Passenger	Skidding/Control Loss	0	1	A-Injury	Daylight
I 057	74.27	201301044195	Rear End	Dry Clear	02 / 16 / 13 05 :00	V1 V2	North North	Had Been Drinking Normal	SUV Tractor With Semi-Trailer	Straight Ahead Entering Traffic Lane Fr	0	3	B-Injury	Darkness
I 057	63.62	201301055028	Overturned	Ice Sleet/Hail	02 / 21 / 13 13 :00	V1 V2	South	Normal	Passenger	Straight Ahead	0	2	A-Injury	Daylight

ILLINOIS DEPARTMENT OF TRANSPORTATION

GIS Crash Report Details: 2010-2015 Crashes

I-57 Herrin Rd to I-64

Route	Mile	Case ID#	Collision Type	Surface /Weather	Crash Date Time		Direction	Driver Condition	Vehicle Type	Maneuver Code	Fatal Count	Injury Count	Injury Type	Lighting
I 057	63.07	201301055183	Fixed Object	Ice Sleet/Hail	02 / 21 / 13 14 :00	V1 V2	South	Normal	Passenger	Straight Ahead	0	0	PD	Daylight
I 057	65.72	201301055257	Fixed Object	Snow or Slush Sleet/Hail	02 / 21 / 13 15 :00	V1 V2	South	Normal	Passenger	Straight Ahead	0	0	PD	Daylight
I 057	64.13	201301055499	Fixed Object	Snow or Slush Snow	02 / 21 / 13 16 :00	V1 V2	South	Normal	SUV	Changing Lanes	0	0	PD	Daylight
I 057	83.06	201301055766	Fixed Object	Ice Sleet/Hail	02 / 21 / 13 18 :00	V1 V2	North	Normal	Passenger	Straight Ahead	0	0	PD	Darkness
I 057	67.1	201301059567	Fixed Object	Snow or Slush Snow	02 / 03 / 13 02 :00	V1 V2	South	Alcohol Impaired	Passenger	Skidding/Control Loss	0	0	PD	Darkness
I 057	60.08	201301062115	Animal	Dry Clear	02 / 25 / 13 20 :00	V1 V2	South	Normal	Passenger	Straight Ahead	0	0	PD	Darkness
I 057	65.08	201301063786	Sideswipe Same Direction	Wet Snow	03 / 01 / 13 11 :00	V1 V2	North North	Normal Normal	Other Passenger	Avoiding Vehicle/Objects Straight Ahead	0	0	PD	Daylight
I 057	62.1	201301064960	Other Non-Collision	Dry Clear	03 / 04 / 13 17 :00	V1 V2	North	Normal	Passenger	Straight Ahead	0	0	PD	Dusk
I 057	64.11	201301067269	Animal	Dry Clear	03 / 09 / 13 18 :00	V1 V2	North	Normal	Passenger	Straight Ahead	0	0	PD	Darkness
I 057	78.06	201301067588	Sideswipe Same Direction	Wet Rain	03 / 10 / 13 15 :00	V1 V2	North North	Normal Normal	Pickup Passenger	Changing Lanes Straight Ahead	0	0	PD	Daylight
I 057	72.09	201301067966	Animal	Dry Clear	03 / 11 / 13 19 :00	V1 V2	North	Normal	Passenger	Straight Ahead	0	0	PD	Darkness
I 057	64.13	201301068793	Sideswipe Same Direction	Dry Clear	03 / 13 / 13 18 :00	V1 V2	South South	Normal Normal	Tractor With Semi-Trailer Passenger	Changing Lanes Straight Ahead	0	0	PD	Daylight
I 057	62.08	201301070653	Sideswipe Same Direction	Dry Clear	03 / 19 / 13 14 :00	V1 V2	North North	Normal Other/Unknown	Tractor With Semi-Trailer Passenger	Changing Lanes Straight Ahead	0	1	A-Injury	Daylight

ILLINOIS DEPARTMENT OF TRANSPORTATION

GIS Crash Report Details: 2010-2015 Crashes

I-57 Herrin Rd to I-64

Route	Mile	Case ID#	Collision Type	Surface /Weather	Crash Date Time		Direction	Driver Condition	Vehicle Type	Maneuver Code	Fatal Count	Injury Count	Injury Type	Lighting
I 057	66.11	201301070771	Sideswipe Same Direction	Snow or Slush Sleet/Hail	03 / 24 / 13 11 :00	V1 V2	South South	Normal Normal	Passenger SUV	Straight Ahead Straight Ahead	0	0	PD	Daylight
I 057	91.26	201301071849	Sideswipe Same Direction	Dry Clear	03 / 23 / 13 13 :00	V1 V2	South South	Normal Normal	Passenger SUV	Changing Lanes Passing/Overtaking	0	0	PD	Daylight
I 057	73.11	201301072066	Animal	Wet Rain	03 / 24 / 13 08 :00	V1 V2	South	Normal	Passenger	Straight Ahead	0	0	PD	Daylight
I 057	63.13	201301073340	Sideswipe Same Direction	Dry Clear	03 / 28 / 13 07 :00	V1 V2	South South	Fatigued Normal	Passenger Tractor With Semi-Trailer	Passing/Overtaking Straight Ahead	0	1	B-Injury	Daylight
I 057	68.11	201301073602	Animal	Dry Clear	03 / 28 / 13 20 :00	V1 V2	South	Normal	Pickup	Straight Ahead	0	0	PD	Darkness
I 057	74.14	201301073634	Animal	Dry Clear	03 / 27 / 13 23 :00	V1 V2	South	Normal	Pickup	Straight Ahead	0	0	PD	Darkness
I 057	85.09	201301080552	Animal	Dry Clear	05 / 25 / 13 03 :00	V1 V2	North	Normal	Passenger	Turning Right	0	0	PD	Daylight
I 057	61.6	201301080920	Rear End	Dry Clear	04 / 01 / 13 02 :00	V1 V2	North North	Normal Normal	Passenger Passenger	Straight Ahead Avoiding Vehicle/Objects	0	0	PD	Darkness
I 057	61.6	201301080923	Animal	Dry Clear	04 / 01 / 13 02 :00	V1 V2	North	Normal	Passenger	Straight Ahead	0	0	PD	Darkness
I 057	73.71	201301080960	Animal	Dry Clear	04 / 01 / 13 04 :00	V1 V2	South	Normal	Pickup	Straight Ahead	0	0	PD	Darkness
I 057	88.11	201301081742	Other Object	Dry Clear	05 / 26 / 13 20 :00	V1 V2	South	Normal	Van/Mini-Van	Straight Ahead	0	0	PD	Darkness
I 057	88.21	201301082706	Animal	Dry Clear	04 / 02 / 13 22 :00	V1 V2	North	Normal	Passenger	Straight Ahead	0	0	PD	Darkness
I 057	91.77	201301083723	Sideswipe Same Direction	Dry Clear	04 / 03 / 13 10 :00	V1 V2	North North	Normal Normal	Tractor With Semi-Trailer Pickup	Straight Ahead Straight Ahead	0	0	PD	Daylight

ILLINOIS DEPARTMENT OF TRANSPORTATION

GIS Crash Report Details: 2010-2015 Crashes

I-57 Herrin Rd to I-64

Route	Mile	Case ID#	Collision Type	Surface /Weather	Crash Date Time		Direction	Driver Condition	Vehicle Type	Maneuver Code	Fatal Count	Injury Count	Injury Type	Lighting
I 057	89.77	201301087540	Other Non-Collision	Dry Clear	04 / 06 / 13 18 :00	V1 V2	South	Normal	Other Vehicle With Trailer	Skidding/Control Loss	0	0	PD	Daylight
I 057	83.15	201301087719	Overturned	Dry Clear	04 / 07 / 13 06 :00	V1 V2	North	Fatigued	Passenger	Straight Ahead	0	1	B-Injury	Dawn
I 057	65.59	201301089349	Rear End	Dry Clear	04 / 09 / 13 15 :00	V1 V2	Unknown South	Other/Unknown Normal	Unknown SUV	Unknown Straight Ahead	0	0	PD	Daylight
I 057	71.04	201301094609	Sideswipe Same Direction	Dry Clear	04 / 16 / 13 10 :00	V1 V2	South South	Normal Normal	Passenger Tractor With Semi-Trailer	Changing Lanes Straight Ahead	0	1	B-Injury	Daylight
I 057	92.03	201301098955	Sideswipe Same Direction	Dry Clear	04 / 23 / 13 07 :00	V1 V2	South South	Normal Normal	Van/Mini-Van Tractor With Semi-Trailer	Straight Ahead Straight Ahead	0	0	PD	Daylight
I 057	84.08	201301101396	Animal	Dry Clear	04 / 25 / 13 20 :00	V1 V2	North	Normal	Tractor With Semi-Trailer	Straight Ahead	0	0	PD	Darkness
I 057	67.12	201301102561	Overturned	Snow or Slush Rain	04 / 27 / 13 15 :00	V1 V2	South	Normal	Passenger	Avoiding Vehicle/Objects	0	0	PD	Daylight
I 057	65.08	201301105497	Fixed Object	Dry Clear	05 / 01 / 13 19 :00	V1 V2	North	Normal	Tractor With Semi-Trailer	Straight Ahead	0	0	PD	Darkness
I 057	64.13	201301107074	Sideswipe Same Direction	Wet Rain	05 / 04 / 13 01 :00	V1 V2	North North	Normal Normal	Truck Single Unit Tractor With Semi-Trailer	Changing Lanes Straight Ahead	0	0	PD	Darkness
I 057	83.26	201301107505	Fixed Object	Wet Rain	05 / 04 / 13 12 :00	V1 V2	South	Normal	Passenger	Skidding/Control Loss	0	3	B-Injury	Daylight
I 057	74.13	201301107739	Animal	Wet Rain	05 / 04 / 13 20 :00	V1 V2	North	Normal	Passenger	Straight Ahead	0	0	PD	Darkness
I 057	67.08	201301108021	Fixed Object	Wet Rain	05 / 05 / 13 12 :00	V1 V2	North South	Normal Normal	Tractor With Semi-Trailer Passenger	Straight Ahead Straight Ahead	0	0	PD	Daylight

ILLINOIS DEPARTMENT OF TRANSPORTATION

GIS Crash Report Details: 2010-2015 Crashes

I-57 Herrin Rd to I-64

Route	Mile	Case ID#	Collision Type	Surface /Weather	Crash Date Time		Direction	Driver Condition	Vehicle Type	Maneuver Code	Fatal Count	Injury Count	Injury Type	Lighting
I 057	90.2	201301109007	Other Non-Collision	Dry Clear	05 / 07 / 13 18 :00	V1 V2	North	Normal	Pickup	Avoiding Vehicle/Objects	0	0	PD	Daylight
I 057	68.11	201301109053	Sideswipe Same Direction	Dry Clear	05 / 07 / 13 22 :00	V1 V2	North North	Normal Normal	Passenger Tractor With Semi-Trailer	Changing Lanes Straight Ahead	0	0	PD	Darkness
I 057	69.31	201301109606	Animal	Dry Clear	05 / 09 / 13 05 :00	V1 V2	North	Normal	Pickup	Straight Ahead	0	0	PD	Dawn
I 057	91.98	201301110294	Sideswipe Same Direction	Wet Rain	05 / 09 / 13 18 :00	V1 V2	South South	Normal Normal	Bus Over 15 Passengers Other Vehicle With Trailer	Unknown Unknown	0	0	PD	Daylight
I 057	90.11	201301112913	Sideswipe Same Direction	Dry Clear	05 / 11 / 13 15 :00	V1 V2	South South	Normal Normal	Tractor With Semi-Trailer Passenger	Changing Lanes Straight Ahead	0	0	PD	Daylight
I 057	63.11	201301115330	Sideswipe Same Direction	Dry Clear	05 / 13 / 13 07 :00	V1 V2	South South	Other/Unknown Normal	Tractor With Semi-Trailer Passenger	Unknown Straight Ahead	0	0	PD	Daylight
I 057	88.61	201301115872	Rear End	Dry Clear	05 / 13 / 13 15 :00	V1 V2	North North	Normal Normal	Passenger Pickup	Straight Ahead Slow/Stop In Traffic	0	2	B-Injury	Daylight
I 057	72.09	201301116093	Animal	Dry Clear	05 / 13 / 13 19 :00	V1 V2	South	Normal	Passenger	Straight Ahead	0	0	PD	Dusk
I 057	60.08	201301117999	Rear End	Dry Clear	05 / 15 / 13 12 :00	V1 V2	North North	Normal Normal	Passenger Passenger	Slow/Stop In Traffic Slow/Stop In Traffic	0	0	PD	Daylight
I 057	60.08	201301118140	Rear End	Dry Clear	05 / 15 / 13 14 :00	V1 V2	North North	Medicated Normal	Tractor With Semi-Trailer Pickup	Straight Ahead Slow/Stop In Traffic	0	2	A-Injury	Daylight
I 057	78.6	201301123172	Fixed Object	Dry Clear	05 / 20 / 13 00 :00	V1 V2	South	Alcohol Impaired	Pickup	Changing Lanes	0	0	PD	Darkness
I 057	87.06	201301128290	Overturned	Dry Clear	05 / 24 / 13 16 :00	V1 V2	South	Normal	Passenger	Passing/Overtaking	0	1	A-Injury	Daylight

ILLINOIS DEPARTMENT OF TRANSPORTATION

GIS Crash Report Details: 2010-2015 Crashes

I-57 Herrin Rd to I-64

Route	Mile	Case ID#	Collision Type	Surface /Weather	Crash Date Time		Direction	Driver Condition	Vehicle Type	Maneuver Code	Fatal Count	Injury Count	Injury Type	Lighting
I 057	78.06	201301130623	Animal	Dry Clear	05 / 25 / 13 02 :00	V1 V2	North	Normal	Passenger	Straight Ahead	0	0	PD	Darkness
I 057	59.2	201301130738	Animal	Dry Clear	05 / 27 / 13 05 :00	V1 V2	North	Normal	Van/Mini-Van	Straight Ahead	0	0	PD	Dawn
I 057	60.08	201301182127	Fixed Object	Dry Clear	06 / 12 / 13 04 :00	V1 V2	South	Fatigued	Pickup	Skidding/Control Loss	0	1	B-Injury	Darkness
I 057	59.1	201301204248	Animal	Dry Clear	06 / 15 / 13 08 :00	V1 V2	North	Normal	Passenger	Straight Ahead	0	0	PD	Daylight
I 057	91.98	201301238182	Sideswipe Same Direction	Clear	11 / 16 / 13 12 :00	V1 V2	South South	Normal Normal	SUV Tractor With Semi-Trailer	Other Straight Ahead	0	0	PD	Daylight
I 057	59.1	201301239151	Other Object	Dry Clear	06 / 23 / 13 02 :00	V1 V2	North	Normal	Passenger	Straight Ahead	0	0	PD	Darkness
I 057	68.11	201301240833	Animal	Wet Rain	06 / 24 / 13 01 :00	V1 V2	South	Normal	Pickup	Straight Ahead	0	0	PD	Darkness
I 057	76.51	201301242009	Sideswipe Same Direction	Dry Clear	06 / 24 / 13 15 :00	V1 V2	North North	Normal Normal	Passenger Passenger	Straight Ahead Straight Ahead	0	0	PD	Daylight
I 057	60.08	201301242112	Fixed Object	Dry Clear	06 / 24 / 13 15 :00	V1 V2	North	Normal	Passenger	Straight Ahead	0	0	PD	Daylight
I 057	87.11	201301243995	Sideswipe Same Direction	Dry Clear	06 / 25 / 13 13 :00	V1 V2	North North	Normal Normal	Passenger Tractor With Semi-Trailer	Changing Lanes Straight Ahead	0	0	PD	Daylight
I 057	74.3	201301245905	Rear End	Dry Clear	07 / 04 / 13 08 :00	V1 V2	North North	Normal Normal	SUV Tractor With Semi-Trailer	Slow/Stop In Traffic Straight Ahead	0	0	PD	Daylight
I 057	90.11	201301246422	Fixed Object	Dry Clear	07 / 30 / 13 04 :00	V1 V2	South	Normal	Tractor With Semi-Trailer	Straight Ahead	0	2	A-Injury	Darkness

ILLINOIS DEPARTMENT OF TRANSPORTATION

GIS Crash Report Details: 2010-2015 Crashes

I-57 Herrin Rd to I-64

Route	Mile	Case ID#	Collision Type	Surface /Weather	Crash Date Time		Direction	Driver Condition	Vehicle Type	Maneuver Code	Fatal Count	Injury Count	Injury Type	Lighting
I 057	65.08	201301246478	Rear End	Wet Rain	07 / 30 / 13 17 :00	V1 V2	South South	Normal Normal	Tractor With Semi-Trailer Tractor With Semi-Trailer	Straight Ahead Slow/Stop In Traffic	0	0	PD	Daylight
I 057	64.66	201301246660	Rear End	Dry Clear	08 / 07 / 13 13 :00	V1 V2	South South	Normal Normal	Tractor With Semi-Trailer Passenger	Straight Ahead Changing Lanes	0	0	PD	Daylight
I 057	68.09	201301246870	Rear End	Dry Clear	08 / 16 / 13 07 :00	V1 V2	South South	Normal Normal	Passenger Tractor With Semi-Trailer	Straight Ahead Straight Ahead	0	0	PD	Daylight
I 057	66.07	201301247861	Fixed Object	Dry Clear	09 / 22 / 13 12 :00	V1 V2	North North	Normal Normal	Truck Single Unit Tractor With Semi-Trailer	Avoiding Vehicle/Objects Straight Ahead	0	0	PD	Daylight
I 057	70.1	201301247879	Sideswipe Same Direction	Dry Clear	09 / 23 / 13 10 :00	V1 V2	South South	Normal Normal	Tractor With Semi-Trailer Tractor With Semi-Trailer	Straight Ahead Slow/Stop In Traffic	0	1	B-Injury	Daylight
I 057	91.77	201301248015	Sideswipe Same Direction	Dry Clear	09 / 27 / 13 21 :00	V1 V2	North North	Other/Unknown Normal	Tractor With Semi-Trailer Passenger	Merging Straight Ahead	0	0	PD	Darkness, Lighted Road
I 057	59.1	201301248016	Sideswipe Same Direction	Dry Clear	09 / 27 / 13 20 :00	V1 V2	North North	Normal Normal	Tractor With Semi-Trailer Passenger	Straight Ahead Straight Ahead	0	0	PD	Darkness
I 057	90.11	201301248718	Sideswipe Same Direction	Dry Clear	10 / 24 / 13 16 :00	V1 V2	South Unknown	Alcohol Impaired Other/Unknown	Tractor With Semi-Trailer Unknown	Straight Ahead Straight Ahead	0	0	PD	Daylight
I 057	89.11	201301249065	Rear End	Dry Clear	10 / 30 / 13 16 :00	V1 V2	North North	Normal Normal	Passenger Tractor With Semi-Trailer	Straight Ahead Slow/Stop In Traffic	0	0	PD	Daylight
I 057	91.26	201301250195	Rear End	Dry Clear	11 / 03 / 13 18 :00	V1 V2	North North	Normal Normal	Tractor With Semi-Trailer Passenger	Straight Ahead Straight Ahead	0	0	PD	Darkness
I 057	74.24	201301250731	Turning	Dry Clear	11 / 05 / 13 13 :00	V1 V2	North North	Normal Normal	Passenger Tractor With Semi-Trailer	Straight Ahead Turning Left	0	0	PD	Daylight
I 057	85.09	201301250975	Sideswipe Same Direction	Snow or Slush Snow	12 / 06 / 13 07 :00	V1 V2	North North	Normal Normal	Tractor With Semi-Trailer Tractor With Semi-Trailer	Skidding/Control Loss Slow/Stop In Traffic	0	0	PD	Daylight

ILLINOIS DEPARTMENT OF TRANSPORTATION

GIS Crash Report Details: 2010-2015 Crashes

I-57 Herrin Rd to I-64

Route	Mile	Case ID#	Collision Type	Surface /Weather	Crash Date Time		Direction	Driver Condition	Vehicle Type	Maneuver Code	Fatal Count	Injury Count	Injury Type	Lighting
I 057	65.08	201301252003	Animal	Wet Other	11 / 12 / 13 02 :00	V1 V2	South	Normal	Tractor With Semi-Trailer	Straight Ahead	0	0	PD	Darkness
I 057	60.08	201301252212	Animal	Dry Clear	11 / 16 / 13 02 :00	V1 V2	North	Normal	Tractor With Semi-Trailer	Straight Ahead	0	0	PD	Darkness
I 057	65.08	201301252375	Rear End	Dry Clear	11 / 20 / 13 16 :00	V1 V2	South South	Normal Normal	Tractor With Semi-Trailer Tractor With Semi-Trailer	Straight Ahead Slow/Stop In Traffic	0	0	PD	Daylight
I 057	92.01	201301252501	Rear End	Dry Clear	11 / 22 / 13 14 :00	V1 V2	South South	Normal Normal	Tractor With Semi-Trailer Tractor With Semi-Trailer	Straight Ahead Slow/Stop In Traffic	0	0	PD	Daylight
I 057	83.06	201301252731	Animal	Dry Clear	11 / 30 / 13 15 :00	V1 V2	South	Normal	Tractor With Semi-Trailer	Straight Ahead	0	0	PD	Darkness
I 057	74.14	201301262385	Fixed Object	Dry Clear	06 / 29 / 13 23 :00	V1 V2	South	Normal	Passenger	Straight Ahead	0	0	PD	Darkness
I 057	91.76	201301266131	Sideswipe Same Direction	Wet Rain	11 / 06 / 13 18 :00	V1 V2	North North	Other/Unknown Normal	Tractor With Semi-Trailer Pickup	Straight Ahead Merging	0	0	PD	Darkness
I 057	91.98	201301267441	Rear End	Dry Clear	07 / 05 / 13 07 :00	V1 V2	North North	Normal Normal	Other SUV	Straight Ahead Straight Ahead	0	1	B-Injury	Daylight
I 057	77.14	201301268307	Fixed Object	Dry Clear	07 / 06 / 13 09 :00	V1 V2	South	Normal	Passenger	Avoiding Vehicle/Objects	0	0	PD	Daylight
I 057	59.1	201301268984	Animal	Dry Clear	07 / 06 / 13 20 :00	V1 V2	North	Normal	Passenger	Straight Ahead	0	0	PD	Darkness
I 057	81.13	201301271818	Overturned	Dry Clear	12 / 24 / 13 12 :00	V1 V2	South North	Normal Normal	SUV Tractor With Semi-Trailer	Skidding/Control Loss Straight Ahead	2	4	Fatal	Daylight
I 057	59.1	201301271886	Sideswipe Same Direction	Dry Clear	11 / 26 / 13 18 :00	V1 V2	North North	Had Been Drinking Normal	Passenger Tractor With Semi-Trailer	Straight Ahead Straight Ahead	0	0	PD	Darkness

ILLINOIS DEPARTMENT OF TRANSPORTATION

GIS Crash Report Details: 2010-2015 Crashes

I-57 Herrin Rd to I-64

Route	Mile	Case ID#	Collision Type	Surface /Weather	Crash Date Time		Direction	Driver Condition	Vehicle Type	Maneuver Code	Fatal Count	Injury Count	Injury Type	Lighting
I 057	68.11	201301272026	Overturned	Dry Snow	12 / 06 / 13 07 :00	V1 V2	South	Normal	Tractor With Semi-Trailer	Straight Ahead	0	0	PD	Daylight
I 057	71.53	201301272028	Other Non-Collision	Snow or Slush Snow	12 / 06 / 13 15 :00	V1 V2	North	Normal	Tractor With Semi-Trailer	Slow/Stop In Traffic	0	0	PD	Daylight
I 057	71.5	201301272029	Rear End	Snow or Slush Snow	12 / 06 / 13 15 :00	V1 V2	North North	Normal Normal	Passenger Tractor With Semi-Trailer	Straight Ahead Slow/Stop In Traffic	0	0	PD	Daylight
I 057	82.87	201301272062	Sideswipe Same Direction	Ice Clear	12 / 07 / 13 17 :00	V1 V2	North North	Normal Normal	Truck Single Unit Tractor With Semi-Trailer	Merging Straight Ahead	0	0	PD	Darkness
I 057	82.88	201301272078	Angle	Snow or Slush Clear	12 / 08 / 13 07 :00	V1 V2	Southeast South	Normal Normal	Other Vehicle With Trailer Tractor With Semi-Trailer	Skidding/Control Loss Avoiding Vehicle/Objects	0	0	PD	Daylight
I 057	69.14	201301272115	Overturned	Dry Clear	12 / 09 / 13 05 :00	V1 V2	South	Normal	Tractor With Semi-Trailer	Changing Lanes	0	0	PD	Darkness
I 057	91.98	201301272267	Animal	Dry Clear	12 / 11 / 13 00 :00	V1 V2	South	Normal	Tractor Without Semi-Trailer	Straight Ahead	0	0	PD	Darkness
I 057	87.11	201301272628	Animal	Wet Snow	12 / 09 / 13 20 :00	V1 V2	South	Normal	Tractor With Semi-Trailer	Straight Ahead	0	0	PD	Darkness
I 057	92	201301272645	Sideswipe Same Direction	Dry Clear	11 / 22 / 13 16 :00	V1 V2	Unknown North	Other/Unknown Normal	Unknown Pickup	Unknown Straight Ahead	0	0	PD	Daylight
I 057	86.01	201301275588	Overturned	Dry Clear	07 / 10 / 13 02 :00	V1 V2	South	Fatigued	Pickup	Straight Ahead	0	0	PD	Darkness
I 057	69	201301279978	Animal	Dry Clear	07 / 15 / 13 05 :00	V1 V2	South	Normal	Pickup	Straight Ahead	0	0	PD	Dawn
I 057	70.1	201301280649	Animal	Wet Clear	07 / 15 / 13 16 :00	V1 V2	South	Normal	Motorcycle (Over 150cc)	Straight Ahead	0	1	A-Injury	Daylight

ILLINOIS DEPARTMENT OF TRANSPORTATION

GIS Crash Report Details: 2010-2015 Crashes

I-57 Herrin Rd to I-64

Route	Mile	Case ID#	Collision Type	Surface /Weather	Crash Date Time		Direction	Driver Condition	Vehicle Type	Maneuver Code	Fatal Count	Injury Count	Injury Type	Lighting
I 057	78.4	201301281134	Overturned	Dry Clear	07 / 16 / 13 10 :00	V1 V2	North	Normal	Other Vehicle With Trailer	Straight Ahead	0	0	PD	Daylight
I 057	91.86	201301292403	Sideswipe Same Direction	Dry Clear	07 / 22 / 13 13 :00	V1 V2	North North	Normal Normal	Van/Mini-Van Passenger	Changing Lanes Straight Ahead	0	0	PD	Daylight
I 057	67.12	201301295288	Animal	Dry Clear	08 / 24 / 13 03 :00	V1 V2	South	Normal	Pickup	Straight Ahead	0	0	PD	Darkness
I 057	67.1	201301295772	Animal	Dry Clear	10 / 07 / 13 23 :00	V1 V2	North	Normal	SUV	Straight Ahead	0	0	PD	Darkness
I 057	68.11	201301295878	Animal	Dry Clear	10 / 15 / 13 05 :00	V1 V2	North	Normal	Truck Single Unit	Straight Ahead	0	0	PD	Darkness
I 057	67.1	201301296044	Animal	Dry Clear	10 / 21 / 13 03 :00	V1 V2	South	Normal	Passenger	Straight Ahead	0	0	PD	Darkness
I 057	89.62	201301296059	Animal	Dry Clear	10 / 21 / 13 23 :00	V1 V2	South	Normal	Pickup	Straight Ahead	0	0	PD	Darkness
I 057	63.11	201301296097	Animal	Dry Clear	10 / 22 / 13 18 :00	V1 V2	South	Normal	Passenger	Straight Ahead	0	1	B-Injury	Darkness
I 057	60.08	201301296186	Animal	Dry Clear	10 / 25 / 13 21 :00	V1 V2	South	Normal	Pickup	Straight Ahead	0	0	PD	Darkness
I 057	72.77	201301296209	Animal	Dry Clear	10 / 26 / 13 13 :00	V1 V2	South	Normal	Pickup	Straight Ahead	0	0	PD	Daylight
I 057	77.23	201301296227	Animal	Dry Clear	10 / 27 / 13 01 :00	V1 V2	North	Normal	Passenger	Straight Ahead	0	0	PD	Darkness
I 057	64.13	201301296248	Animal	Dry Clear	10 / 27 / 13 05 :00	V1 V2	North	Normal	Pickup	Straight Ahead	0	0	PD	Darkness
I 057	71.58	201301296399	Animal	Dry Clear	11 / 02 / 13 04 :00	V1 V2	South	Normal	Passenger	Straight Ahead	0	0	PD	Darkness, Lighted Road

ILLINOIS DEPARTMENT OF TRANSPORTATION

GIS Crash Report Details: 2010-2015 Crashes

I-57 Herrin Rd to I-64

Route	Mile	Case ID#	Collision Type	Surface /Weather	Crash Date Time		Direction	Driver Condition	Vehicle Type	Maneuver Code	Fatal Count	Injury Count	Injury Type	Lighting
I 057	77.12	201301296555	Animal	Dry Clear	11 / 05 / 13 18 :00	V1 V2	North	Normal	Pickup	Straight Ahead	0	0	PD	Darkness
I 057	84.08	201301296574	Animal	Wet Rain	11 / 06 / 13 05 :00	V1 V2	North	Normal	Passenger	Straight Ahead	0	0	PD	Darkness
I 057	59.05	201301296619	Animal	Dry Clear	11 / 07 / 13 05 :00	V1 V2	South	Normal	SUV	Straight Ahead	0	0	PD	Darkness
I 057	90.11	201301296748	Animal	Dry Clear	11 / 09 / 13 09 :00	V1 V2	South	Normal	Van/Mini-Van	Straight Ahead	0	0	PD	Daylight
I 057	75.11	201301297016	Animal	Dry Clear	11 / 14 / 13 21 :00	V1 V2	North	Normal	Pickup	Straight Ahead	0	0	PD	Darkness
I 057	91.98	201301297053	Animal	Dry Clear	11 / 15 / 13 16 :00	V1 V2	South	Normal	Passenger	Straight Ahead	0	0	PD	Daylight
I 057	66.07	201301297129	Animal	Dry Clear	11 / 16 / 13 20 :00	V1 V2	North	Normal	Passenger	Straight Ahead	0	1	C-Injury	Darkness
I 057	77.59	201301297179	Animal	Wet Clear	11 / 17 / 13 21 :00	V1 V2	North	Normal	Passenger	Straight Ahead	0	0	PD	Darkness
I 057	61.08	201301297257	Animal	Dry Clear	11 / 19 / 13 01 :00	V1 V2	North	Normal	Passenger	Straight Ahead	0	0	PD	Darkness
I 057	68.11	201301297411	Animal	Wet Rain	11 / 21 / 13 22 :00	V1 V2	North	Normal	Pickup	Straight Ahead	0	0	PD	Darkness
I 057	83.06	201301297430	Animal		11 / 22 / 13 08 :00	V1 V2	South	Other/Unknown	Passenger	Straight Ahead	0	0	PD	Daylight
I 057	76.58	201301297465	Animal	Dry Clear	11 / 23 / 13 06 :00	V1 V2	North	Normal	SUV	Straight Ahead	0	0	PD	Dawn
I 057	68.61	201301297509	Animal	Dry Clear	11 / 24 / 13 22 :00	V1 V2	North	Normal	Passenger	Straight Ahead	0	0	PD	Darkness

ILLINOIS DEPARTMENT OF TRANSPORTATION

GIS Crash Report Details: 2010-2015 Crashes

I-57 Herrin Rd to I-64

Route	Mile	Case ID#	Collision Type	Surface /Weather	Crash Date Time		Direction	Driver Condition	Vehicle Type	Maneuver Code	Fatal Count	Injury Count	Injury Type	Lighting
I 057	63.13	201301297657	Animal	Dry Clear	11 / 30 / 13 06 :00	V1 V2	North	Normal	Passenger	Straight Ahead	0	0	PD	Daylight
I 057	77.12	201301298052	Animal	Dry Clear	12 / 18 / 13 22 :00	V1 V2	North	Normal	Passenger	Straight Ahead	0	0	PD	Darkness
I 057	64.13	201301298126	Animal	Dry Clear	12 / 30 / 13 01 :00	V1 V2	North	Normal	SUV	Straight Ahead	0	0	PD	Darkness
I 057	91.35	201301298167	Animal	Dry Clear	12 / 27 / 13 17 :00	V1 V2	North	Normal	Passenger	Straight Ahead	0	0	PD	Darkness
I 057	69.55	201301298539	Fixed Object	Dry Clear	07 / 24 / 13 22 :00	V1 V2	South	Alcohol Impaired	Pickup	Unknown	0	0	PD	Darkness
I 057	73.64	201301302856	Fixed Object	Wet Clear	08 / 02 / 13 23 :00	V1 V2	South	Normal	Pickup	Avoiding Vehicle/Objects	0	0	PD	Darkness
I 057	71.37	201301305116	Fixed Object	Dry Clear	08 / 18 / 13 07 :00	V1 V2	South	Fatigued	Passenger	Straight Ahead	0	2	B-Injury	Daylight
I 057	88.11	201301333371	Overturned	Dry Clear	08 / 25 / 13 13 :00	V1 V2	South	Normal	Pickup	Straight Ahead	0	0	PD	Daylight
I 057	73.11	201301334312	Other Non-Collision	Dry Clear	08 / 26 / 13 12 :00	V1 V2	South	Normal	Pickup	Straight Ahead	0	0	PD	Daylight
I 057	72.09	201301335512	Overturned	Dry Clear	08 / 28 / 13 18 :00	V1 V2	South	Normal	Passenger	Straight Ahead	0	1	A-Injury	Daylight
I 057	79.1	201301335538	Fixed Object	Dry Clear	08 / 29 / 13 02 :00	V1 V2	North	Normal	Passenger	Straight Ahead	0	3	A-Injury	Darkness
I 057	87.11	201301336505	Fixed Object	Dry Clear	09 / 01 / 13 13 :00	V1 V2	South	Normal	Passenger	Straight Ahead	0	0	PD	Daylight
I 057	60.08	201301341821	Rear End	Dry Clear	09 / 08 / 13 00 :00	V1 V2	North North	Fatigued Normal	Passenger Passenger	Straight Ahead Straight Ahead	0	0	PD	Darkness

ILLINOIS DEPARTMENT OF TRANSPORTATION

GIS Crash Report Details: 2010-2015 Crashes

I-57 Herrin Rd to I-64

Route	Mile	Case ID#	Collision Type	Surface /Weather	Crash Date Time		Direction	Driver Condition	Vehicle Type	Maneuver Code	Fatal Count	Injury Count	Injury Type	Lighting
I 057	63.11	201301348026	Fixed Object	Dry Clear	09 / 16 / 13 04 :00	V1 V2	South	Other/Unknown	Passenger	Straight Ahead	0	0	PD	Darkness
I 057	60.08	201301370396	Animal	Dry Clear	10 / 24 / 13 17 :00	V1 V2	South	Normal	Passenger	Straight Ahead	0	0	PD	Darkness
I 057	87.61	201301374007	Animal	Dry Clear	10 / 28 / 13 04 :00	V1 V2	South	Normal	Passenger	Straight Ahead	0	0	PD	Darkness
I 057	59.1	201301381069	Animal	Other Clear	11 / 04 / 13 08 :00	V1 V2	South	Normal	Passenger	Turning Right	0	0	PD	Darkness
I 057	77.12	201301381307	Rear End	Dry Clear	10 / 14 / 13 15 :00	V1 V2	South South	Alcohol Impaired Normal	Passenger Passenger	Changing Lanes Straight Ahead	0	0	PD	Daylight
I 057	61.1	201301386241	Rear End	Dry Clear	11 / 04 / 13 09 :00	V1 V2	North North	Normal Normal	Passenger Passenger	Straight Ahead Straight Ahead	0	3	A-Injury	Daylight
I 057	85.09	201301395457	Overturned	Dry Clear	11 / 18 / 13 21 :00	V1 V2	South	Other/Unknown	Passenger	Straight Ahead	0	1	A-Injury	Darkness
I 057	73.1	201301407916	Other Object	Dry Clear	12 / 04 / 13 21 :00	V1 V2	South	Other/Unknown	Passenger	Avoiding Vehicle/Objects	0	0	PD	Darkness
I 057	86.1	201301409419	Rear End	Snow or Slush Snow	12 / 06 / 13 20 :00	V1 V2	South South	Normal Normal	Passenger Passenger	Avoiding Vehicle/Objects Straight Ahead	0	2	B-Injury	Darkness, Lighted Road
I 057	91.71	201301436144	Other Object	Dry Clear	11 / 02 / 13 15 :00	V1 V2	North North	Normal Normal	Passenger Passenger	Avoiding Vehicle/Objects Straight Ahead	0	0	PD	Daylight
I 057	61.1	201301436451	Overturned	Dry Clear	11 / 04 / 13 09 :00	V1 V2	South	Normal	Passenger	Passing/Overtaking	0	0	PD	Daylight
I 057	65.67	201301437824	Fixed Object	Dry Clear	11 / 08 / 13 18 :00	V1 V2	South North	Other/Unknown Normal	Passenger Pickup	Other Straight Ahead	0	2	B-Injury	Darkness
I 057	91.98	201301437959	Rear End	Dry Clear	11 / 09 / 13 12 :00	V1 V2	South South	Normal Normal	Passenger SUV	Straight Ahead Slow/Stop In Traffic	0	0	PD	Daylight

ILLINOIS DEPARTMENT OF TRANSPORTATION

GIS Crash Report Details: 2010-2015 Crashes

I-57 Herrin Rd to I-64

Route	Mile	Case ID#	Collision Type	Surface /Weather	Crash Date Time		Direction	Driver Condition	Vehicle Type	Maneuver Code	Fatal Count	Injury Count	Injury Type	Lighting
I 057	68.11	201301438391	Other Object	Dry Clear	11 / 11 / 13 13 :00	V1 V2	North	Fatigued	Van/Mini-Van	Other	0	0	PD	Daylight
I 057	64.13	201301439175	Sideswipe Same Direction	Dry Clear	11 / 13 / 13 19 :00	V1 V2	South South	Normal Normal	Passenger Pickup	Straight Ahead Straight Ahead	0	0	PD	Darkness
I 057	92.03	201301442713	Rear End	Dry Clear	11 / 25 / 13 23 :00	V1 V2	North North	Drug Impaired Normal	Passenger Passenger	Straight Ahead Slow/Stop In Traffic	0	0	PD	Darkness
I 057	64.13	201301442905	Sideswipe Same Direction	Dry Clear	11 / 26 / 13 17 :00	V1 V2	North North	Normal Normal	Passenger Pickup	Passing/Overtaking Straight Ahead	0	0	PD	Darkness
I 057	86.1	201301443863	Fixed Object	Dry Clear	12 / 01 / 13 04 :00	V1 V2	North	Fatigued	Passenger	Straight Ahead	0	2	A-Injury	Darkness
I 057	63	201301443960	Rear End	Dry Clear	12 / 01 / 13 15 :00	V1 V2	South South	Normal Normal	SUV Passenger	Slow/Stop In Traffic Slow/Stop In Traffic	0	0	PD	Daylight
I 057	63.11	201301443961	Rear End	Dry Clear	12 / 01 / 13 15 :00	V1 V2	South South	Normal Normal	SUV Passenger	Straight Ahead Slow/Stop - Left Turn	0	0	PD	Daylight
I 057	72.09	201301445046	Fixed Object	Ice Sleet/Hail	12 / 05 / 13 12 :00	V1 V2	South	Normal	Passenger	Straight Ahead	0	0	PD	Daylight
I 057	62.61	201301445049	Fixed Object	Snow or Slush Sleet/Hail	12 / 05 / 13 12 :00	V1 V2	North	Normal	Passenger	Skidding/Control Loss	0	1	C-Injury	Daylight
I 057	64.08	201301445169	Overturned	Snow or Slush Snow	12 / 05 / 13 19 :00	V1 V2	North	Normal	SUV	Straight Ahead	0	0	PD	Darkness
I 057	85.3	201301445515	Sideswipe Same Direction	Snow or Slush Clear	12 / 06 / 13 21 :00	V1 V2	South South	Other/Unknown Normal	Tractor With Semi-Trailer Pickup	Straight Ahead Straight Ahead	0	0	PD	Darkness
I 057	65.08	201301450988	Fixed Object	Dry Clear	12 / 20 / 13 05 :00	V1 V2	North	Normal	Passenger	Avoiding Vehicle/Objects	0	0	PD	Darkness
I 057	67.23	201301452695	Other Non-Collision	Dry Clear	12 / 26 / 13 08 :00	V1 V2	North	Normal	Passenger	Skidding/Control Loss	0	0	PD	Daylight

ILLINOIS DEPARTMENT OF TRANSPORTATION

GIS Crash Report Details: 2010-2015 Crashes

I-57 Herrin Rd to I-64

Route	Mile	Case ID#	Collision Type	Surface /Weather	Crash Date Time		Direction	Driver Condition	Vehicle Type	Maneuver Code	Fatal Count	Injury Count	Injury Type	Lighting
I 057	76.84	201301454736	Fixed Object	Dry Clear	07 / 29 / 13 10 :00	V1 V2	North	Normal	Truck Single Unit	Starting In Traffic	0	0	PD	Daylight
I 057	91.39	201400002347	Sideswipe Same Direction	Snow or Slush Clear	01 / 06 / 14 13 :00	V1 V2	Southwest Southwest	Other/Unknown Normal	Tractor With Semi-Trailer Truck Single Unit	Skidding/Control Loss Other	0	0	PD	Daylight
I 057	67.4	201400005113	Rear End	Dry Clear	01 / 15 / 14 07 :00	V1 V2	South South	Other/Unknown Normal	Tractor With Semi-Trailer Passenger	Passing/Overtaking Straight Ahead	0	0	PD	Daylight
I 057	61.55	201400005652	Fixed Object	Dry Clear	01 / 14 / 14 19 :00	V1 V2	South	Other/Unknown	Tractor With Semi-Trailer	Straight Ahead	0	0	PD	Darkness
I 057	88.11	201400022887	Fixed Object	Dry Clear	01 / 26 / 14 20 :00	V1 V2	South	Fatigued	Tractor With Semi-Trailer	Straight Ahead	0	0	PD	Darkness
I 057	82.18	201400022890	Other Non-Collision	Ice Snow	02 / 04 / 14 19 :00	V1 V2	South	Normal	Tractor With Semi-Trailer	Straight Ahead	0	0	PD	Darkness
I 057	81.36	201400022893	Rear End	Ice Snow	02 / 04 / 14 20 :00	V1 V2	South South	Normal Normal	Tractor With Semi-Trailer Passenger	Straight Ahead Other	0	0	PD	Darkness
I 057	82.18	201400022895	Rear End	Ice Snow	02 / 04 / 14 20 :00	V1 V2	South South	Normal Normal	Tractor With Semi-Trailer Tractor With Semi-Trailer	Skidding/Control Loss Slow/Stop In Traffic	0	1	C-Injury	Darkness
I 057	79.45	201400027601	Rear End	Dry Clear	03 / 04 / 14 15 :00	V1 V2	North North	Normal Normal	Pickup Tractor With Semi-Trailer	Unknown Slow/Stop In Traffic	0	2	A-Injury	Daylight
I 057	79.46	201400030571	Sideswipe Same Direction	Dry Clear	03 / 04 / 14 15 :00	V1 V2	North North	Normal Normal	Pickup Tractor With Semi-Trailer	Straight Ahead Slow/Stop In Traffic	0	0	PD	Daylight
I 057	83.56	201400033140	Sideswipe Same Direction	Dry Clear	03 / 21 / 14 01 :00	V1 V2	South South	Drug Impaired Normal	SUV SUV	Passing/Overtaking Straight Ahead	1	1	Fatal	Darkness
I 057	71.35	201400034392	Fixed Object	Wet Rain	04 / 03 / 14 08 :00	V1 V2	South South	Normal Normal	Passenger Passenger	Skidding/Control Loss Slow/Stop In Traffic	0	1	B-Injury	Daylight

ILLINOIS DEPARTMENT OF TRANSPORTATION

GIS Crash Report Details: 2010-2015 Crashes

I-57 Herrin Rd to I-64

Route	Mile	Case ID#	Collision Type	Surface /Weather	Crash Date Time		Direction	Driver Condition	Vehicle Type	Maneuver Code	Fatal Count	Injury Count	Injury Type	Lighting
I 057	69.11	201400034510	Sideswipe Same Direction	Dry Clear	04 / 02 / 14 19 :00	V1 V2	South South	Normal Normal	Passenger Tractor With Semi-Trailer	Passing/Overtaking Straight Ahead	0	0	PD	Darkness
I 057	72.1	201400035715	Overturned	Wet Rain	04 / 03 / 14 18 :00	V1 V2	South	Normal	Tractor With Semi-Trailer	Straight Ahead	0	0	PD	Darkness
I 057	64.49	201400036307	Rear End	Dry Clear	03 / 11 / 14 13 :00	V1 V2	North North	Normal Normal	Pickup Tractor With Semi-Trailer	Straight Ahead Slow/Stop In Traffic	0	1	B-Injury	Daylight
I 057	78.06	201400036583	Sideswipe Same Direction	Dry Clear	03 / 26 / 14 18 :00	V1 V2	North North	Normal Normal	Passenger Tractor With Semi-Trailer	Passing/Overtaking Straight Ahead	0	0	PD	Daylight
I 057	66.96	201400037960	Sideswipe Same Direction	Dry Clear	04 / 13 / 14 18 :00	V1 V2	South South	Normal Normal	Passenger Tractor With Semi-Trailer	Straight Ahead Straight Ahead	0	0	PD	Daylight
I 057	89.11	201400040143	Sideswipe Same Direction	Dry Clear	04 / 18 / 14 08 :00	V1 V2	North North	Illness Normal	Pickup Tractor With Semi-Trailer	Entering Traffic Lane Fr Straight Ahead	0	1	C-Injury	Daylight
I 057	63.11	201400042121	Sideswipe Same Direction	Dry Clear	04 / 17 / 14 16 :00	V1 V2	South South	Normal Normal	Passenger Tractor With Semi-Trailer	Changing Lanes Straight Ahead	0	0	PD	Daylight
I 057	63.11	201400042135	Sideswipe Same Direction	Dry Clear	04 / 17 / 14 19 :00	V1 V2	South South	Normal Normal	Tractor Without Semi-Trailer Passenger	Changing Lanes Straight Ahead	0	0	PD	Daylight
I 057	68.06	201400043138	Sideswipe Same Direction	Wet Clear	04 / 28 / 14 19 :00	V1 V2	North North	Normal Normal	Pickup Tractor With Semi-Trailer	Straight Ahead Straight Ahead	0	0	PD	Darkness
I 057	63.84	201400043271	Rear End	Dry Clear	04 / 23 / 14 12 :00	V1 V2	South South	Normal Normal	Passenger Tractor With Semi-Trailer	Straight Ahead Slow/Stop In Traffic	0	0	PD	Daylight
I 057	71.52	201400043792	Sideswipe Same Direction	Dry Clear	04 / 16 / 14 22 :00	V1 V2	South South	Normal Normal	Passenger Tractor Without Semi-Trailer	Passing/Overtaking Straight Ahead	0	0	PD	Darkness
I 057	69.11	201400050461	Fixed Object	Dry Clear	05 / 02 / 14 18 :00	V1 V2	South	Illness	Tractor With Semi-Trailer	Straight Ahead	0	0	PD	Daylight

ILLINOIS DEPARTMENT OF TRANSPORTATION

GIS Crash Report Details: 2010-2015 Crashes

I-57 Herrin Rd to I-64

Route	Mile	Case ID#	Collision Type	Surface /Weather	Crash Date Time		Direction	Driver Condition	Vehicle Type	Maneuver Code	Fatal Count	Injury Count	Injury Type	Lighting
I 057	89.11	201400053524	Sideswipe Same Direction	Dry Clear	05 / 20 / 14 14 :00	V1 V2	North North	Other/Unknown Normal	Passenger Tractor With Semi-Trailer	Unknown Changing Lanes	0	0	PD	Daylight
I 057	90.09	201400054715	Rear End	Wet Clear	05 / 26 / 14 15 :00	V1 V2	North North	Normal Normal	Tractor With Semi-Trailer Tractor With Semi-Trailer	Straight Ahead Slow/Stop In Traffic	0	0	PD	Daylight
I 057	91.98	201400057893	Sideswipe Same Direction	Dry Clear	06 / 04 / 14 09 :00	V1 V2	South South	Normal Normal	Tractor With Semi-Trailer Passenger	Passing/Overtaking Straight Ahead	0	0	PD	Daylight
I 057	68.11	201400059658	Animal	Dry Clear	06 / 01 / 14 21 :00	V1 V2	South	Normal	Tractor With Semi-Trailer	Straight Ahead	0	0	PD	Darkness
I 057	74.13	201400086405	Fixed Object	Dry Clear	06 / 26 / 14 09 :00	V1 V2	South	Normal	Tractor With Semi-Trailer	Avoiding Vehicle/Objects	0	0	PD	Daylight
I 057	65.39	201400096658	Fixed Object	Ice Snow	02 / 04 / 14 15 :00	V1 V2	South	Normal	SUV	Skidding/Control Loss	0	0	PD	Daylight
I 057	59.08	201400099811	Rear End	Dry Clear	06 / 12 / 14 18 :00	V1 V2	North North	Normal Normal	Passenger Tractor With Semi-Trailer	Straight Ahead Straight Ahead	0	1	B-Injury	Daylight
I 057	63.2	201400101296	Overturned	Dry Clear	06 / 30 / 14 09 :00	V1 V2	South	Normal	Tractor With Semi-Trailer	Straight Ahead	0	0	PD	Daylight
I 057	73.98	201400102156	Animal	Dry Clear	06 / 06 / 14 01 :00	V1 V2	South	Normal	Tractor With Semi-Trailer	Straight Ahead	0	0	PD	Darkness
I 057	75.11	201400107676	Sideswipe Same Direction	Wet Rain	06 / 29 / 14 09 :00	V1 V2	North North	Normal Normal	Tractor With Semi-Trailer Passenger	Straight Ahead Straight Ahead	0	0	PD	Daylight
I 057	67.1	201400107689	Sideswipe Same Direction	Dry Clear	06 / 25 / 14 13 :00	V1 V2	South South	Normal Normal	Tractor With Semi-Trailer Tractor With Semi-Trailer	Skidding/Control Loss Other	0	0	PD	Daylight
I 057	70.04	201400107710	Rear End	Dry Clear	07 / 04 / 14 15 :00	V1 V2	South South	Normal Normal	Pickup Tractor With Semi-Trailer	Straight Ahead Slow/Stop In Traffic	0	0	PD	Daylight

ILLINOIS DEPARTMENT OF TRANSPORTATION

GIS Crash Report Details: 2010-2015 Crashes

I-57 Herrin Rd to I-64

Route	Mile	Case ID#	Collision Type	Surface /Weather	Crash Date Time		Direction	Driver Condition	Vehicle Type	Maneuver Code	Fatal Count	Injury Count	Injury Type	Lighting
I 057	78.06	201400107732	Fixed Object	Dry Clear	07 / 07 / 14 09 :00	V1 V2	South	Normal	Tractor With Semi-Trailer	Straight Ahead	0	0	PD	Daylight
I 057	92	201400119175	Angle	Dry Clear	06 / 20 / 14 01 :00	V1 V2	South East	Normal Normal	Tractor With Semi-Trailer SUV	Backing Straight Ahead	0	3	A-Injury	Darkness
I 057	59.1	201400129338	Animal	Dry Clear	03 / 01 / 14 02 :00	V1 V2	Unknown	Other/Unknown	Passenger	Unknown	0	0	PD	Darkness
I 057	74.5	201400131827	Rear End	Dry Clear	06 / 24 / 14 14 :00	V1 V2	South South	Normal Normal	Tractor With Semi-Trailer SUV	Straight Ahead Slow/Stop In Traffic	0	0	PD	Daylight
I 057	91.37	201400138554	Other Object	Dry Clear	07 / 26 / 14 18 :00	V1 V2	North	Normal	Tractor With Semi-Trailer	Skidding/Control Loss	0	0	PD	Daylight
I 057	84.08	201400150429	Overturned	Snow or Slush Snow	01 / 16 / 14 06 :00	V1 V2	North	Normal	Pickup	Skidding/Control Loss	0	0	PD	Dusk
I 057	78.63	201400151688	Rear End	Dry Clear	01 / 18 / 14 13 :00	V1 V2	South South	Normal Normal	Passenger Van/Mini-Van	Passing/Overtaking Straight Ahead	0	0	PD	Daylight
I 057	72.06	201400152391	Animal	Dry Clear	01 / 20 / 14 11 :00	V1 V2	South	Normal	Passenger	Straight Ahead	0	0	PD	Daylight
I 057	77.77	201400153216	Sideswipe Same Direction	Dry Clear	01 / 21 / 14 17 :00	V1 V2	South South	Normal Normal	SUV Passenger	Straight Ahead Straight Ahead	0	0	PD	Darkness
I 057	68.24	201400154214	Rear End	Dry Clear	01 / 23 / 14 15 :00	V1 V2	North North	Other/Unknown Normal	Passenger Pickup	Straight Ahead Straight Ahead	0	1	A-Injury	Daylight
I 057	75.33	201400154540	Sideswipe Same Direction	Dry Clear	01 / 24 / 14 09 :00	V1 V2	South South	Other/Unknown Normal	Pickup Passenger	Unknown Straight Ahead	0	0	PD	Daylight
I 057	64.13	201400159917	Fixed Object	Ice Snow	02 / 04 / 14 20 :00	V1 V2	North	Normal	Passenger	Skidding/Control Loss	0	1	B-Injury	Darkness
I 057	65.21	201400159980	Fixed Object	Snow or Slush Snow	02 / 04 / 14 22 :00	V1 V2	North	Normal	Passenger	Straight Ahead	0	0	PD	Darkness

ILLINOIS DEPARTMENT OF TRANSPORTATION

GIS Crash Report Details: 2010-2015 Crashes

I-57 Herrin Rd to I-64

Route	Mile	Case ID#	Collision Type	Surface /Weather	Crash Date Time		Direction	Driver Condition	Vehicle Type	Maneuver Code	Fatal Count	Injury Count	Injury Type	Lighting
I 057	59.61	201400163337	Other Object	Dry Clear	02 / 11 / 14 18 :00	V1 V2	North	Normal	Passenger	Straight Ahead	0	0	PD	Darkness
I 057	70.1	201400168162	Animal	Dry Clear	02 / 23 / 14 23 :00	V1 V2	South	Normal	Passenger	Straight Ahead	0	0	PD	Darkness
I 057	85.09	201400169953	Fixed Object	Snow or Slush Clear	03 / 02 / 14 11 :00	V1 V2	North North	Normal Normal	Passenger Van/Mini-Van	Passing/Overtaking Straight Ahead	0	0	PD	Daylight
I 057	72.84	201400170135	Fixed Object	Snow or Slush Snow	03 / 02 / 14 15 :00	V1 V2	South	Normal	Passenger	Straight Ahead	0	0	PD	Daylight
I 057	83.06	201400170532	Fixed Object	Ice Snow	03 / 03 / 14 23 :00	V1 V2	South	Normal	Passenger	Straight Ahead	0	0	PD	Darkness
I 057	64.33	201400172026	Sideswipe Same Direction	Dry Clear	03 / 08 / 14 12 :00	V1 V2	South South	Normal Normal	Pickup SUV	Changing Lanes Straight Ahead	0	0	PD	Daylight
I 057	66.6	201400172056	Fixed Object	Wet Rain	03 / 08 / 14 16 :00	V1 V2	North	Normal	Passenger	Straight Ahead	0	0	PD	Dusk
I 057	66.09	201400172533	Rear End	Dry Clear	03 / 11 / 14 13 :00	V1 V2	North North	Normal Normal	SUV Other	Straight Ahead Slow/Stop In Traffic	0	2	A-Injury	Daylight
I 057	70.76	201400173345	Fixed Object	Dry Clear	03 / 14 / 14 00 :00	V1 V2	South	Normal	Passenger	Skidding/Control Loss	0	2	B-Injury	Darkness
I 057	83.06	201400173563	Animal	Dry Clear	03 / 14 / 14 22 :00	V1 V2	North	Normal	Passenger	Straight Ahead	0	0	PD	Darkness
I 057	61.1	201400174501	Other Object	Dry Clear	08 / 15 / 14 15 :00	V1 V2	South North	Normal Normal	Tractor With Semi-Trailer Passenger	Straight Ahead Straight Ahead	0	0	PD	Daylight
I 057	60.08	201400174525	Overturned	Dry Clear	08 / 16 / 14 03 :00	V1 V2	North	Normal	Truck Single Unit	Skidding/Control Loss	0	0	PD	Darkness
I 057	60.09	201400174812	Fixed Object	Dry Clear	08 / 22 / 14 04 :00	V1 V2	South	Normal	Tractor With Semi-Trailer	Straight Ahead	0	0	PD	Darkness

ILLINOIS DEPARTMENT OF TRANSPORTATION

GIS Crash Report Details: 2010-2015 Crashes

I-57 Herrin Rd to I-64

Route	Mile	Case ID#	Collision Type	Surface /Weather	Crash Date Time		Direction	Driver Condition	Vehicle Type	Maneuver Code	Fatal Count	Injury Count	Injury Type	Lighting
I 057	70.1	201400176003	Fixed Object	Wet Rain	03 / 24 / 14 22 :00	V1 V2	North	Normal	Pickup	Skidding/Control Loss	0	2	B-Injury	Darkness
I 057	62.57	201400176399	Sideswipe Same Direction	Dry Clear	03 / 26 / 14 14 :00	V1 V2	North North	Normal Normal	Passenger Truck Single Unit	Straight Ahead Other	0	1	B-Injury	Daylight
I 057	76.1	201400177294	Rear End	Dry Clear	03 / 30 / 14 10 :00	V1 V2	North North	Normal Normal	Pickup Passenger	Straight Ahead Slow/Stop In Traffic	0	0	PD	Daylight
I 057	66.98	201400177375	Animal	Dry Clear	03 / 30 / 14 18 :00	V1 V2	North	Normal	Passenger	Straight Ahead	0	0	PD	Dusk
I 057	77.03	201400178343	Animal	Dry Clear	04 / 05 / 14 15 :00	V1 V2	South	Normal	Passenger	Straight Ahead	0	0	PD	Daylight
I 057	59.1	201400179265	Sideswipe Same Direction	Dry Clear	04 / 11 / 14 09 :00	V1 V2	North North	Normal Normal	Tractor With Semi-Trailer Passenger	Changing Lanes Straight Ahead	0	0	PD	Daylight
I 057	77.12	201400179574	Overturned	Dry Clear	04 / 12 / 14 21 :00	V1 V2	South	Normal	Pickup	Skidding/Control Loss	0	0	PD	Darkness
I 057	80.11	201400180296	Fixed Object	Dry Clear	08 / 17 / 14 16 :00	V1 V2	North	Illness	Passenger	Straight Ahead	0	2	A-Injury	Daylight
I 057	60.53	201400181026	Rear End	Dry Clear	04 / 18 / 14 11 :00	V1 V2	North North	Normal Normal	Passenger Passenger	Changing Lanes Straight Ahead	0	0	PD	Daylight
I 057	70.36	201400181058	Fixed Object	Dry Clear	04 / 18 / 14 14 :00	V1 V2	South	Normal	Pickup	Avoiding Vehicle/Objects	0	0	PD	Daylight
I 057	68.8	201400181405	Sideswipe Same Direction	Dry Clear	04 / 20 / 14 14 :00	V1 V2	North North	Normal Normal	Passenger Passenger	Changing Lanes Straight Ahead	0	0	PD	Daylight
I 057	69.16	201400181563	Other Non-Collision	Dry Clear	04 / 21 / 14 15 :00	V1 V2	Southeast	Normal	Pickup	Skidding/Control Loss	0	3	A-Injury	Daylight
I 057	62.1	201400181883	Fixed Object	Dry Clear	04 / 23 / 14 09 :00	V1 V2	South	Normal	Passenger	Avoiding Vehicle/Objects	0	0	PD	Daylight

ILLINOIS DEPARTMENT OF TRANSPORTATION

GIS Crash Report Details: 2010-2015 Crashes

I-57 Herrin Rd to I-64

Route	Mile	Case ID#	Collision Type	Surface /Weather	Crash Date Time		Direction	Driver Condition	Vehicle Type	Maneuver Code	Fatal Count	Injury Count	Injury Type	Lighting
I 057	64.86	201400182079	Rear End	Dry Clear	04 / 24 / 14 14 :00	V1 V2	South South	Normal Normal	Passenger Pickup	Avoiding Vehicle/Objects Diverging	0	0	PD	Daylight
I 057	66.9	201400182383	Fixed Object	Wet Rain	04 / 24 / 14 23 :00	V1 V2	South	Normal	Passenger	Straight Ahead	0	0	PD	Darkness
I 057	65.19	201400183852	Animal	Dry Clear	05 / 03 / 14 23 :00	V1 V2	North	Normal	Pickup	Straight Ahead	0	0	PD	Darkness
I 057	71.65	201400184274	Sideswipe Same Direction	Dry Clear	05 / 05 / 14 17 :00	V1 V2	North North	Normal Normal	Passenger Passenger	Negotiating A Curve Straight Ahead	0	0	PD	Daylight
I 057	71.66	201400186879	Sideswipe Same Direction	Dry Clear	05 / 22 / 14 10 :00	V1 V2	South South	Normal Normal	Pickup Passenger	Straight Ahead Straight Ahead	0	0	PD	Daylight
I 057	84.08	201400186977	Animal	Dry Clear	05 / 22 / 14 22 :00	V1 V2	South	Normal	Passenger	Straight Ahead	0	0	PD	Darkness
I 057	59.94	201400187962	Other Non-Collision	Dry Clear	05 / 29 / 14 16 :00	V1 V2	North	Normal	Truck Single Unit	Straight Ahead	0	1	B-Injury	Daylight
I 057	91.98	201400188063	Fixed Object	Wet Rain	05 / 30 / 14 13 :00	V1 V2	South	Normal	Passenger	Changing Lanes	0	0	PD	Daylight
I 057	64.13	201400188850	Animal	Dry Clear	06 / 03 / 14 19 :00	V1 V2	North	Normal	Passenger	Straight Ahead	0	0	PD	Daylight
I 057	84.63	201400188860	Fixed Object	Wet Clear	06 / 04 / 14 16 :00	V1 V2	North	Normal	Pickup	Straight Ahead	0	0	PD	Daylight
I 057	69.24	201400189171	Animal	Dry Clear	06 / 06 / 14 11 :00	V1 V2	North	Normal	SUV	Straight Ahead	0	0	PD	Daylight
I 057	87.15	201400189512	Animal	Dry Clear	06 / 07 / 14 06 :00	V1 V2	South	Normal	Passenger	Straight Ahead	0	0	PD	Daylight
I 057	61.8	201400189716	Fixed Object	Dry Clear	06 / 08 / 14 14 :00	V1 V2	N/A North	N/A Normal	N/A Passenger	N/A Passing/Overtaking	0	0	PD	Daylight

ILLINOIS DEPARTMENT OF TRANSPORTATION

GIS Crash Report Details: 2010-2015 Crashes

I-57 Herrin Rd to I-64

Route	Mile	Case ID#	Collision Type	Surface /Weather	Crash Date Time		Direction	Driver Condition	Vehicle Type	Maneuver Code	Fatal Count	Injury Count	Injury Type	Lighting
I 057	60.08	201400189808	Animal	Wet Clear	06 / 09 / 14 04 :00	V1 V2	North	Normal	SUV	Straight Ahead	0	0	PD	Darkness
I 057	59.37	201400190142	Rear End	Wet Clear	06 / 10 / 14 09 :00	V1 V2	North North	Normal Normal	Pickup Passenger	Straight Ahead Slow/Stop In Traffic	0	0	PD	Daylight
I 057	72.47	201400190727	Rear End	Dry Clear	06 / 13 / 14 18 :00	V1 V2	North North	Normal Normal	Passenger Passenger	Straight Ahead Straight Ahead	0	2	B-Injury	Daylight
I 057	71.14	201400190977	Animal	Dry Clear	06 / 15 / 14 04 :00	V1 V2	South	Normal	Passenger	Straight Ahead	0	0	PD	Darkness
I 057	80.14	201400191786	Animal	Dry Clear	06 / 19 / 14 23 :00	V1 V2	South	Normal	Passenger	Straight Ahead	0	0	PD	Darkness
I 057	65.69	201400193494	Rear End	Wet Rain	06 / 24 / 14 10 :00	V1 V2	South South	Normal Normal	Passenger Passenger	Slow/Stop In Traffic Slow/Stop In Traffic	0	1	C-Injury	Daylight
I 057	64.13	201400196703	Sideswipe Same Direction	Dry Clear	07 / 02 / 14 18 :00	V1 V2	North North	Normal Normal	Passenger Passenger	Changing Lanes Straight Ahead	0	0	PD	Daylight
I 057	84.06	201400197558	Rear End	Dry Clear	07 / 05 / 14 22 :00	V1 V2	North North	Normal Normal	Passenger Passenger	Straight Ahead Straight Ahead	0	2	B-Injury	Darkness
I 057	80.52	201400198005	Rear End	Dry Clear	07 / 07 / 14 15 :00	V1 V2	South South	Normal Normal	Pickup Passenger	Straight Ahead Straight Ahead	0	0	PD	Daylight
I 057	81.13	201400198096	Rear End	Dry Clear	07 / 07 / 14 23 :00	V1 V2	South South	Normal Normal	Passenger Passenger	Straight Ahead Straight Ahead	0	0	PD	Darkness
I 057	72.71	201400198219	Fixed Object	Dry Clear	07 / 08 / 14 10 :00	V1 V2	North	Normal	Passenger	Slow/Stop In Traffic	0	0	PD	Daylight
I 057	69.91	201400199730	Animal	Dry Clear	07 / 13 / 14 06 :00	V1 V2	North	Normal	Passenger	Straight Ahead	0	0	PD	Daylight
I 057	91.16	201400201841	Fixed Object	Dry Clear	07 / 21 / 14 11 :00	V1 V2	South	Other/Unknown	Unknown	Straight Ahead	0	0	PD	Daylight

ILLINOIS DEPARTMENT OF TRANSPORTATION

GIS Crash Report Details: 2010-2015 Crashes

I-57 Herrin Rd to I-64

Route	Mile	Case ID#	Collision Type	Surface /Weather	Crash Date Time		Direction	Driver Condition	Vehicle Type	Maneuver Code	Fatal Count	Injury Count	Injury Type	Lighting
I 057	76.4	201400202315	Fixed Object	Wet Rain	07 / 23 / 14 09 :00	V1 V2	South	Normal	SUV	Avoiding Vehicle/Objects	0	0	PD	Daylight
I 057	71.14	201400203189	Overturned	Dry Clear	07 / 27 / 14 04 :00	V1 V2	North	Normal	Pickup	Straight Ahead	0	0	PD	Darkness
I 057	80.21	201400203254	Overturned	Dry Clear	07 / 27 / 14 14 :00	V1 V2	North	Normal	Motorcycle (Over 150cc)	Straight Ahead	0	0	PD	Daylight
I 057	66.09	201400203385	Rear End	Dry Rain	07 / 28 / 14 10 :00	V1 V2	North North	Normal Normal	Passenger Passenger	Changing Lanes Straight Ahead	0	0	PD	Daylight
I 057	82.2	201400203573	Fixed Object	Dry Clear	07 / 29 / 14 09 :00	V1 V2	N/A South	N/A Normal	N/A SUV	N/A Straight Ahead	0	1	B-Injury	Daylight
I 057	66.09	201400204582	Rear End	Dry Clear	07 / 30 / 14 15 :00	V1 V2	North North	Normal Normal	Passenger Other Vehicle With Trailer	Straight Ahead Slow/Stop In Traffic	0	0	PD	Daylight
I 057	65.21	201400204595	Rear End	Dry Clear	07 / 30 / 14 15 :00	V1 V2	North North	Normal Normal	Passenger Pickup	Straight Ahead Slow/Stop In Traffic	0	0	PD	Daylight
I 057	91.96	201400205089	Animal	Dry Clear	07 / 31 / 14 18 :00	V1 V2	South	Normal	Passenger	Straight Ahead	0	0	PD	Daylight
I 057	79.39	201400207272	Rear End	Dry Clear	08 / 05 / 14 23 :00	V1 V2	South South	Normal Normal	Passenger Other	Straight Ahead Straight Ahead	0	0	PD	Darkness
I 057	71.13	201400211071	Fixed Object	Dry Clear	09 / 08 / 14 12 :00	V1 V2	North	Other/Unknown	Passenger	Skidding/Control Loss	0	1	B-Injury	Daylight
I 057	62.26	201400211174	Fixed Object	Dry Clear	09 / 09 / 14 13 :00	V1 V2	North	Normal	Tractor Without Semi-Trailer	Straight Ahead	0	0	PD	Daylight
I 057	77.03	201400211272	Rear End	Dry Clear	08 / 14 / 14 10 :00	V1 V2	South South	Normal Normal	Passenger Van/Mini-Van	Straight Ahead Slow/Stop In Traffic	0	0	PD	Daylight
I 057	76.82	201400212802	Sideswipe Same Direction	Dry Clear	09 / 04 / 14 08 :00	V1 V2	South South	Normal Normal	Tractor With Semi-Trailer Passenger	Passing/Overtaking Straight Ahead	0	0	PD	Daylight

ILLINOIS DEPARTMENT OF TRANSPORTATION

GIS Crash Report Details: 2010-2015 Crashes

I-57 Herrin Rd to I-64

Route	Mile	Case ID#	Collision Type	Surface /Weather	Crash Date Time		Direction	Driver Condition	Vehicle Type	Maneuver Code	Fatal Count	Injury Count	Injury Type	Lighting
I 057	86.61	201400212992	Other Non-Collision	Dry Clear	04 / 11 / 14 18 :00	V1 V2	North	Normal	Passenger	Skidding/Control Loss	0	0	PD	Daylight
I 057	71.45	201400215832	Overturned	Dry Clear	08 / 20 / 14 12 :00	V1 V2	North	Other/Unknown	Passenger	Negotiating A Curve	0	0	PD	Daylight
I 057	89.11	201400216179	Rear End	Dry Clear	09 / 11 / 14 21 :00	V1 V2	North North	Normal Normal	Bus Over 15 Passengers SUV	Slow/Stop In Traffic Slow/Stop In Traffic	0	3	B-Injury	Darkness
I 057	63.11	201400216450	Fixed Object	Dry Clear	09 / 13 / 14 00 :00	V1 V2	North	Drug Impaired	Pickup	Straight Ahead	0	1	B-Injury	Darkness
I 057	91.84	201400221243	Animal	Dry Clear	08 / 30 / 14 00 :00	V1 V2	South	Normal	Passenger	Straight Ahead	0	0	PD	Darkness
I 057	91.98	201400222266	Fixed Object	Wet Rain	09 / 10 / 14 21 :00	V1 V2	South South	Other/Unknown Normal	Passenger Tractor With Semi-Trailer	Straight Ahead Straight Ahead	0	0	PD	Darkness
I 057	91.98	201400226145	Sideswipe Same Direction	Wet Rain	08 / 27 / 14 03 :00	V1 V2	North North	Other/Unknown Normal	Tractor With Semi-Trailer Passenger	Passing/Overtaking Straight Ahead	0	0	PD	Daylight
I 057	71.14	201400226288	Pedestrian	Dry Clear	09 / 12 / 14 17 :00	V1 V2	N/A South	N/A Normal	N/A Passenger	N/A Slow/Stop In Traffic	0	1	B-Injury	Daylight
I 057	91.98	201400232306	Sideswipe Same Direction	Dry Clear	08 / 14 / 14 09 :00	V1 V2	South South	Normal Normal	Tractor With Semi-Trailer Passenger	Straight Ahead Slow/Stop In Traffic	0	0	PD	Daylight
I 057	69.61	201400233576	Fixed Object	Dry Clear	05 / 15 / 14 06 :00	V1 V2	South	Illness	Van/Mini-Van	Other	0	0	PD	Daylight
I 057	69.54	201400239041	Sideswipe Opposite Direction	Dry Clear	09 / 28 / 14 08 :00	V1 V2	South North	Normal Normal	Passenger Tractor With Semi-Trailer	Straight Ahead Straight Ahead	0	1	B-Injury	Daylight
I 057	79.48	201400239163	Fixed Object	Dry Clear	09 / 28 / 14 11 :00	V1 V2	North	Normal	Pickup	Changing Lanes	0	3	B-Injury	Daylight

ILLINOIS DEPARTMENT OF TRANSPORTATION

GIS Crash Report Details: 2010-2015 Crashes

I-57 Herrin Rd to I-64

Route	Mile	Case ID#	Collision Type	Surface /Weather	Crash Date Time		Direction	Driver Condition	Vehicle Type	Maneuver Code	Fatal Count	Injury Count	Injury Type	Lighting
I 057	76.1	201400247683	Animal	Dry Clear	10 / 04 / 14 22 :00	V1 V2	North	Normal	Motorcycle (Over 150cc)	Straight Ahead	0	1	B-Injury	Darkness
I 057	80.69	201400251799	Rear End	Dry Clear	09 / 19 / 14 22 :00	V1 V2	North North	Normal Normal	Passenger Pickup	Straight Ahead Straight Ahead	0	0	PD	Darkness
I 057	76.1	201400257724	Rear End	Dry Clear	09 / 30 / 14 14 :00	V1 V2	South South	Normal Normal	Passenger Passenger	Straight Ahead Straight Ahead	0	1	C-Injury	Daylight
I 057	70.1	201400262481	Fixed Object	Dry Clear	10 / 19 / 14 07 :00	V1 V2	North	Normal	Passenger	Straight Ahead	0	1	B-Injury	Daylight
I 057	70.91	201400269827	Animal	Dry Clear	05 / 19 / 14 03 :00	V1 V2	North	Normal	Passenger	Straight Ahead	0	0	PD	Darkness
I 057	65.07	201400279419	Animal	Dry Clear	10 / 31 / 14 18 :00	V1 V2	South	Normal	Passenger	Straight Ahead	0	1	B-Injury	Darkness
I 057	82.18	201400279491	Sideswipe Same Direction	Dry Clear	10 / 31 / 14 23 :00	V1 V2	South South	Other/Unknown Normal	Passenger Tractor With Semi-Trailer	Changing Lanes Straight Ahead	0	0	PD	Darkness
I 057	71.14	201400281917	Rear End	Wet Clear	10 / 15 / 14 22 :00	V1 V2	South South	Normal Normal	Passenger Passenger	Merging Merging	0	0	PD	Darkness, Lighted Road
I 057	86.1	201400283743	Other Non-Collision	Dry Clear	09 / 17 / 14 19 :00	V1 V2	North	Normal	Truck Single Unit	Straight Ahead	0	1	C-Injury	Darkness
I 057	81.13	201400284709	Animal	Dry Clear	11 / 05 / 14 03 :00	V1 V2	South	Normal	Tractor With Semi-Trailer	Straight Ahead	0	0	PD	Darkness
I 057	68.65	201400290672	Rear End	Dry Clear	10 / 21 / 14 13 :00	V1 V2	North North	Normal Normal	Passenger SUV	Straight Ahead Slow/Stop In Traffic	0	0	PD	Daylight
I 057	71.57	201400292344	Angle	Dry Clear	10 / 21 / 14 10 :00	V1 V2	West North	Normal Normal	Passenger Van/Mini-Van	Straight Ahead Slow/Stop - Left Turn	0	1	C-Injury	Daylight
I 057	71.57	201400292352	Sideswipe Same Direction	Dry Clear	10 / 29 / 14 16 :00	V1 V2	West West	Normal Normal	Tractor With Semi-Trailer Other	Changing Lanes Starting In Traffic	0	0	PD	Daylight

ILLINOIS DEPARTMENT OF TRANSPORTATION

GIS Crash Report Details: 2010-2015 Crashes

I-57 Herrin Rd to I-64

Route	Mile	Case ID#	Collision Type	Surface /Weather	Crash Date Time		Direction	Driver Condition	Vehicle Type	Maneuver Code	Fatal Count	Injury Count	Injury Type	Lighting
I 057	60.1	201400295597	Other Object	Dry Clear	10 / 24 / 14 18 :00	V1 V2	North	Normal	Passenger	Straight Ahead	0	0	PD	Darkness
I 057	77.59	201400298475	Rear End	Dry Clear	10 / 29 / 14 06 :00	V1 V2	South South	Normal Normal	Pickup Passenger	Straight Ahead Straight Ahead	0	0	PD	Dawn
I 057	59.1	201400299896	Animal	Wet Clear	10 / 31 / 14 01 :00	V1 V2	South	Normal	Passenger	Straight Ahead	0	0	PD	Darkness
I 057	88.11	201400299909	Animal	Dry Clear	10 / 31 / 14 01 :00	V1 V2	South	Normal	Passenger	Straight Ahead	0	0	PD	Darkness
I 057	59.23	201400300849	Animal	Dry Clear	11 / 01 / 14 05 :00	V1 V2	South	Normal	Passenger	Straight Ahead	0	0	PD	Darkness
I 057	86.91	201400301599	Animal	Dry Clear	11 / 02 / 14 00 :00	V1 V2	North	Normal	Passenger	Straight Ahead	0	0	PD	Darkness
I 057	83.06	201400301951	Animal	Dry Clear	11 / 02 / 14 23 :00	V1 V2	South	Normal	Passenger	Straight Ahead	0	0	PD	Darkness
I 057	91.16	201400305137	Animal	Dry Clear	06 / 07 / 14 12 :00	V1 V2	South	Normal	Van/Mini-Van	Straight Ahead	0	0	PD	Daylight
I 057	63.11	201400306622	Animal	Dry Clear	11 / 15 / 14 02 :00	V1 V2	North	Normal	Truck Single Unit	Straight Ahead	0	0	PD	Darkness
I 057	85.09	201400309696	Rear End	Dry Clear	10 / 30 / 14 13 :00	V1 V2	North North	Normal Normal	Passenger Tractor With Semi-Trailer	Straight Ahead Straight Ahead	0	1	B-Injury	Daylight
I 057	58.82	201400309910	Fixed Object	Dry Clear	11 / 02 / 14 18 :00	V1 V2	South	Normal	Tractor With Semi-Trailer	Straight Ahead	0	0	PD	Darkness
I 057	79.1	201400310876	Animal	Dry Clear	11 / 06 / 14 21 :00	V1 V2	North	Normal	Tractor With Semi-Trailer	Straight Ahead	0	0	PD	Darkness
I 057	65.79	201400311964	Fixed Object	Dry Clear	11 / 12 / 14 03 :00	V1 V2	North	Other/Unknown	Truck Single Unit	Skidding/Control Loss	0	0	PD	Darkness

ILLINOIS DEPARTMENT OF TRANSPORTATION

GIS Crash Report Details: 2010-2015 Crashes

I-57 Herrin Rd to I-64

Route	Mile	Case ID#	Collision Type	Surface /Weather	Crash Date Time		Direction	Driver Condition	Vehicle Type	Maneuver Code	Fatal Count	Injury Count	Injury Type	Lighting
I 057	86.1	201400313899	Rear End	Dry Clear	10 / 16 / 14 13 :00	V1 V2	South South	Normal Normal	Passenger Passenger	Straight Ahead Slow/Stop In Traffic	0	0	PD	Daylight
I 057	76.1	201400314039	Animal	Dry Clear	11 / 22 / 14 17 :00	V1 V2	North	Normal	Truck Single Unit	Straight Ahead	0	0	PD	Darkness
I 057	65.07	201400314120	Sideswipe Same Direction	Wet Rain	11 / 23 / 14 17 :00	V1 V2	North North	Normal Normal	SUV Tractor With Semi-Trailer	Changing Lanes Straight Ahead	0	0	PD	Darkness
I 057	70.1	201400314927	Sideswipe Same Direction	Wet Rain	11 / 30 / 14 18 :00	V1 V2	South South	Normal Normal	Tractor With Semi-Trailer Passenger	Straight Ahead Straight Ahead	0	0	PD	Darkness
I 057	71.14	201400314982	Rear End	Dry Clear	12 / 02 / 14 21 :00	V1 V2	South South	Normal Other/Unknown	Passenger Passenger	Straight Ahead Passing/Overtaking	0	1	B-Injury	Darkness
I 057	72.1	201400316445	Animal	Dry Clear	10 / 31 / 14 04 :00	V1 V2	South	Normal	Pickup	Straight Ahead	0	0	PD	Darkness
I 057	80.09	201400318739	Animal	Dry Clear	11 / 01 / 14 03 :00	V1 V2	North	Normal	Pickup	Straight Ahead	0	0	PD	Darkness
I 057	62.39	201400319949	Animal	Dry Clear	12 / 06 / 14 06 :00	V1 V2	South	Normal	Tractor With Semi-Trailer	Straight Ahead	0	0	PD	Dawn
I 057	83.36	201400320501	Animal	Dry Clear	11 / 02 / 14 21 :00	V1 V2	South	Normal	Passenger	Straight Ahead	0	0	PD	Darkness
I 057	83.06	201400320528	Animal	Dry Clear	11 / 03 / 14 00 :00	V1 V2	South	Normal	Passenger	Straight Ahead	0	0	PD	Darkness
I 057	59.15	201400322747	Angle	Dry Clear	11 / 06 / 14 18 :00	V1 V2	West North	Normal Normal	Passenger SUV	Merging Straight Ahead	0	0	PD	Darkness, Lighted Road
I 057	81.13	201400324536	Animal	Dry Clear	11 / 07 / 14 21 :00	V1 V2	North	Normal	Passenger	Straight Ahead	0	0	PD	Darkness
I 057	59.34	201400324707	Animal	Dry Clear	11 / 08 / 14 01 :00	V1 V2	South	Normal	Passenger	Straight Ahead	0	0	PD	Darkness

ILLINOIS DEPARTMENT OF TRANSPORTATION

GIS Crash Report Details: 2010-2015 Crashes

I-57 Herrin Rd to I-64

Route	Mile	Case ID#	Collision Type	Surface /Weather	Crash Date Time		Direction	Driver Condition	Vehicle Type	Maneuver Code	Fatal Count	Injury Count	Injury Type	Lighting
I 057	72.1	201400324776	Fixed Object	Dry Clear	06 / 05 / 14 17 :00	V1 V2	North	Normal	Van/Mini-Van	Straight Ahead	0	0	PD	Daylight
I 057	59.29	201400326095	Other Object	Dry Clear	11 / 09 / 14 03 :00	V1 V2	South	Normal	Van/Mini-Van	Straight Ahead	0	0	PD	Darkness
I 057	60.94	201400326116	Animal	Dry Clear	11 / 09 / 14 03 :00	V1 V2	North	Normal	Passenger	Straight Ahead	0	0	PD	Darkness
I 057	70.1	201400327576	Animal	Dry Clear	11 / 11 / 14 10 :00	V1 V2	South	Normal	Passenger	Straight Ahead	0	0	PD	Daylight
I 057	60.08	201400332987	Animal	Dry Clear	11 / 12 / 14 19 :00	V1 V2	South	Normal	Pickup	Straight Ahead	0	0	PD	Darkness
I 057	84.08	201400333646	Fixed Object	Dry Clear	11 / 13 / 14 09 :00	V1 V2	North	Normal	Passenger	Changing Lanes	0	0	PD	Daylight
I 057	86.1	201400334612	Rear End	Dry Clear	12 / 11 / 14 12 :00	V1 V2	North North	Normal Normal	Tractor With Semi-Trailer Tractor With Semi-Trailer	Straight Ahead Straight Ahead	0	0	PD	Daylight
I 057	60.08	201400336867	Animal	Dry Clear	11 / 14 / 14 19 :00	V1 V2	South	Normal	Van/Mini-Van	Straight Ahead	0	0	PD	Darkness
I 057	80.11	201400336912	Animal	Dry Clear	11 / 14 / 14 21 :00	V1 V2	North	Normal	Pickup	Straight Ahead	0	0	PD	Darkness
I 057	69.09	201400337027	Animal	Dry Clear	11 / 15 / 14 02 :00	V1 V2	South	Normal	SUV	Straight Ahead	0	0	PD	Darkness
I 057	67.1	201400337112	Animal	Dry Clear	11 / 15 / 14 10 :00	V1 V2	South	Normal	Pickup	Straight Ahead	0	0	PD	Daylight
I 057	91.16	201400342249	Animal	Dry Clear	11 / 15 / 14 04 :00	V1 V2	South	Normal	Tractor With Semi-Trailer	Straight Ahead	0	0	PD	Darkness
I 057	68.11	201400356214	Other Non-Collision	Dry Clear	12 / 31 / 14 17 :00	V1 V2	South South	Normal Normal	Tractor With Semi-Trailer Passenger	Straight Ahead Straight Ahead	0	0	PD	Darkness

ILLINOIS DEPARTMENT OF TRANSPORTATION

GIS Crash Report Details: 2010-2015 Crashes

I-57 Herrin Rd to I-64

Route	Mile	Case ID#	Collision Type	Surface /Weather	Crash Date Time		Direction	Driver Condition	Vehicle Type	Maneuver Code	Fatal Count	Injury Count	Injury Type	Lighting
I 057	81.13	201400361618	Sideswipe Same Direction	Dry Clear	07 / 24 / 14 17 :00	V1 V2	North North	Normal Normal	Passenger Passenger	Changing Lanes Straight Ahead	0	0	PD	Daylight
I 057	73.11	201400362239	Animal	Dry Clear	11 / 17 / 14 15 :00	V1 V2	North	Normal	Passenger	Straight Ahead	0	0	PD	Daylight
I 057	63.11	201400362904	Animal	Dry Clear	11 / 17 / 14 18 :00	V1 V2	North	Normal	Pickup	Straight Ahead	0	0	PD	Darkness
I 057	60.57	201400366543	Fixed Object	Wet Rain	10 / 13 / 14 16 :00	V1 V2	South	Normal	Passenger	Straight Ahead	0	2	A-Injury	Daylight
I 057	61.12	201400374774	Animal	Dry Clear	11 / 21 / 14 15 :00	V1 V2	South	Other/Unknown	Passenger	Straight Ahead	0	0	PD	Daylight
I 057	60.07	201400380953	Animal	Dry Clear	11 / 25 / 14 20 :00	V1 V2	North	Normal	SUV	Straight Ahead	0	0	PD	Darkness
I 057	70.12	201400381023	Animal	Dry Clear	11 / 26 / 14 02 :00	V1 V2	South	Normal	Passenger	Straight Ahead	0	0	PD	Darkness
I 057	71.57	201400381464	Angle	Dry Clear	08 / 27 / 14 12 :00	V1 V2	West Southeast	Normal Normal	Pickup Passenger	Straight Ahead Starting In Traffic	0	1	B-Injury	Daylight
I 057	91.7	201400384520	Fixed Object	Ice Sleet/Hail	12 / 01 / 14 07 :00	V1 V2	South	Normal	Passenger	Straight Ahead	0	0	PD	Daylight
I 057	86.1	201400386263	Animal	Wet Rain	12 / 04 / 14 06 :00	V1 V2	South	Normal	Tractor With Semi-Trailer	Straight Ahead	0	0	PD	Darkness
I 057	69.11	201400388722	Sideswipe Same Direction	Dry Clear	12 / 06 / 14 05 :00	V1 V2	South South	Other/Unknown Normal	Passenger Passenger	Passing/Overtaking Straight Ahead	0	0	PD	Darkness
I 057	59.08	201400390666	Animal	Dry Clear	12 / 08 / 14 18 :00	V1 V2	North	Normal	Passenger	Straight Ahead	0	0	PD	Darkness
I 057	79.1	201400391447	Animal	Dry Clear	12 / 10 / 14 06 :00	V1 V2	North	Normal	Passenger	Straight Ahead	0	0	PD	Daylight

ILLINOIS DEPARTMENT OF TRANSPORTATION

GIS Crash Report Details: 2010-2015 Crashes

I-57 Herrin Rd to I-64

Route	Mile	Case ID#	Collision Type	Surface /Weather	Crash Date Time		Direction	Driver Condition	Vehicle Type	Maneuver Code	Fatal Count	Injury Count	Injury Type	Lighting
I 057	73.13	201400395083	Sideswipe Same Direction	Wet Rain	12 / 15 / 14 16 :00	V1 V2	South Unknown	Fatigued Other/Unknown	Passenger Unknown	Straight Ahead Unknown	0	0	PD	Dusk
I 057	78.79	201400395417	Animal	Dry Clear	12 / 17 / 14 15 :00	V1 V2	North	Normal	SUV	Straight Ahead	0	0	PD	Daylight
I 057	80.87	201400399894	Overturned	Dry Clear	12 / 25 / 14 10 :00	V1 V2	North	Other/Unknown	Van/Mini-Van	Skidding/Control Loss	0	0	PD	Daylight
I 057	62.1	201400400724	Animal	Wet Clear	12 / 27 / 14 06 :00	V1 V2	South	Normal	SUV	Straight Ahead	0	0	PD	Darkness
I 057	71.57	201400409628	Rear End	Clear	10 / 06 / 14 16 :00	V1 V2	East East	Normal Normal	Passenger Pickup	Straight Ahead Straight Ahead	0	0	PD	Daylight
I 057	70.29	201400409636	Animal	Dry Clear	10 / 05 / 14 23 :00	V1 V2	South	Normal	SUV	Straight Ahead	0	0	PD	Darkness
I 057	65.08	201400430140	Other Object	Clear	11 / 02 / 14 19 :00	V1 V2	South	Other/Unknown	Passenger	Unknown	0	0	PD	Darkness
I 057	75.11	201400430710	Animal	Dry Clear	11 / 03 / 14 04 :00	V1 V2	North	Normal	Passenger	Straight Ahead	0	1	C-Injury	Darkness
I 057	63.11	201400432548	Animal	Wet Rain	11 / 23 / 14 19 :00	V1 V2	North	Normal	Passenger	Straight Ahead	0	0	PD	Darkness
I 057	59.42	201501015227	Other Object	Wet Rain	01 / 03 / 15 06 :00	V1 V2	North	Normal	Tractor With Semi-Trailer	Avoiding Vehicle/Objects	0	0	PD	Darkness
I 057	69.15	201501027305	Overturned	Dry Snow	02 / 02 / 15 05 :00	V1 V2	South	Normal	Tractor With Semi-Trailer	Straight Ahead	0	1	B-Injury	Darkness
I 057	60.08	201501048812	Fixed Object	Dry Clear	03 / 12 / 15 04 :00	V1 V2	South	Normal	Passenger	Skidding/Control Loss	0	1	B-Injury	Darkness
I 057	73.21	201501051479	Animal	Wet Rain	01 / 02 / 15 17 :00	V1 V2	North	Normal	Passenger	Straight Ahead	0	0	PD	Darkness

ILLINOIS DEPARTMENT OF TRANSPORTATION

GIS Crash Report Details: 2010-2015 Crashes

I-57 Herrin Rd to I-64

Route	Mile	Case ID#	Collision Type	Surface /Weather	Crash Date Time		Direction	Driver Condition	Vehicle Type	Maneuver Code	Fatal Count	Injury Count	Injury Type	Lighting
I 057	61.6	201501064250	Rear End	Wet Clear	01 / 15 / 15 07 :00	V1 V2	South South	Normal Normal	Passenger Passenger	Straight Ahead Slow/Stop In Traffic	0	1	C-Injury	Daylight
I 057	60.6	201501064251	Rear End	Wet Snow	01 / 15 / 15 07 :00	V1 V2	Unknown South	Other/Unknown Normal	Unknown Van/Mini-Van	Unknown Slow/Stop In Traffic	0	0	PD	Daylight
I 057	88.92	201501064857	Fixed Object	Dry Clear	03 / 23 / 15 11 :00	V1 V2	North	Normal	Passenger	Straight Ahead	0	1	B-Injury	Daylight
I 057	75.37	201501065541	Other Non-Collision	Dry Clear	03 / 31 / 15 08 :00	V1 V2	South North	Normal Normal	Tractor With Semi-Trailer Passenger	Straight Ahead Straight Ahead	0	1	A-Injury	Darkness
I 057	91.95	201501073424	Other Non-Collision	Dry Clear	01 / 30 / 15 16 :00	V1 V2	N/A South	N/A Normal	N/A Passenger	N/A Avoiding Vehicle/Objects	0	0	PD	Daylight
I 057	82.85	201501074996	Other Non-Collision	Dry Clear	04 / 16 / 15 04 :00	V1 V2	North	Normal	Van/Mini-Van	Straight Ahead	0	1	B-Injury	Daylight
I 057	79.1	201501076966	Other Object	Dry Clear	02 / 02 / 15 08 :00	V1 V2	North North	Normal Normal	Passenger Passenger	Skidding/Control Loss Straight Ahead	0	0	PD	Daylight
I 057	59.15	201501077186	Sideswipe Same Direction	Dry Clear	04 / 14 / 15 21 :00	V1 V2	North North	Alcohol Impaired Normal	Motorcycle (Over 150cc) Tractor With Semi-Trailer	Passing/Overtaking Straight Ahead	1	0	Fatal	Darkness
I 057	91.98	201501082978	Other Object	Dry Clear	02 / 13 / 15 19 :00	V1 V2	North	Normal	Passenger	Straight Ahead	0	0	PD	Darkness
I 057	91.98	201501082979	Other Object	Dry Clear	02 / 13 / 15 19 :00	V1 V2	North	Normal	Passenger	Straight Ahead	0	0	PD	Darkness
I 057	79.16	201501083397	Animal	Dry Clear	04 / 22 / 15 03 :00	V1 V2	South	Normal	Tractor With Semi-Trailer	Straight Ahead	0	0	PD	Darkness
I 057	67.59	201501083584	Animal	Dry Clear	04 / 21 / 15 05 :00	V1 V2	South	Normal	SUV	Straight Ahead	0	0	PD	Dawn
I 057	83.14	201501083585	Animal	Dry Clear	04 / 19 / 15 23 :00	V1 V2	North	Normal	Tractor With Semi-Trailer	Straight Ahead	0	0	PD	Darkness

ILLINOIS DEPARTMENT OF TRANSPORTATION

GIS Crash Report Details: 2010-2015 Crashes

I-57 Herrin Rd to I-64

Route	Mile	Case ID#	Collision Type	Surface /Weather	Crash Date Time		Direction	Driver Condition	Vehicle Type	Maneuver Code	Fatal Count	Injury Count	Injury Type	Lighting
I 057	84.08	201501084334	Other Non-Collision	Wet Clear	02 / 17 / 15 06 :00	V1 V2	North	Normal	Passenger	Straight Ahead	0	0	PD	Daylight
I 057	91.43	201501085742	Parked Motor Vehicle	Snow or Slush Snow	02 / 18 / 15 08 :00	V1 V2	South South	Normal	Passenger Passenger	Skidding/Control Loss Parked	0	0	PD	Daylight
I 057	59.05	201501085808	Animal	Dry Clear	05 / 03 / 15 11 :00	V1 V2	South	Normal	Passenger	Straight Ahead	0	0	PD	Darkness
I 057	84.02	201501088797	Animal	Dry Clear	05 / 06 / 15 23 :00	V1 V2	South	Normal	SUV	Straight Ahead	0	0	PD	Darkness
I 057	87.11	201501094892	Animal	Dry Clear	05 / 13 / 15 08 :00	V1 V2	North	Normal	Passenger	Straight Ahead	0	0	PD	Dusk
I 057	88.91	201501094908	Animal	Dry Clear	05 / 14 / 15 05 :00	V1 V2	North	Normal	Passenger	Straight Ahead	0	0	PD	Darkness
I 057	76.2	201501098472	Animal	Dry Clear	05 / 18 / 15 21 :00	V1 V2	South	Normal	Passenger	Straight Ahead	0	0	PD	Darkness
I 057	65.26	201501098750	Animal	Wet Rain	05 / 21 / 15 02 :00	V1 V2	North	Normal	Passenger	Straight Ahead	0	0	PD	Darkness, Lighted Road
I 057	88.94	201501098753	Overturned	Dry Clear	05 / 18 / 15 08 :00	V1 V2	South	Normal	Tractor With Semi-Trailer	Straight Ahead	0	1	B-Injury	Darkness
I 057	70.18	201501100819	Animal	Dry Clear	05 / 23 / 15 15 :00	V1 V2	North	Normal	Van/Mini-Van	Straight Ahead	0	0	PD	Daylight
I 057	64.26	201501101228	Animal	Dry Clear	05 / 23 / 15 19 :00	V1 V2	North	Normal	Pickup	Straight Ahead	0	0	PD	Dusk
I 057	71.38	201501101865	Animal	Dry Clear	05 / 10 / 15 23 :00	V1 V2	North	Normal	SUV	Straight Ahead	0	0	PD	Darkness
I 057	75.39	201501103401	Animal	Dry Clear	05 / 21 / 15 19 :00	V1 V2	North	Normal	Passenger	Straight Ahead	0	0	PD	Daylight

ILLINOIS DEPARTMENT OF TRANSPORTATION

GIS Crash Report Details: 2010-2015 Crashes

I-57 Herrin Rd to I-64

Route	Mile	Case ID#	Collision Type	Surface /Weather	Crash Date Time		Direction	Driver Condition	Vehicle Type	Maneuver Code	Fatal Count	Injury Count	Injury Type	Lighting
I 057	70.1	201501103403	Animal		05 / 21 / 15 02 :00	V1 V2	North	Normal	Passenger	Straight Ahead	0	0	PD	Darkness
I 057	87.02	201501112043	Sideswipe Same Direction	Dry Clear	05 / 21 / 15 18 :00	V1 V2	North North	Normal Normal	SUV Tractor With Semi-Trailer	Straight Ahead Straight Ahead	0	1	B-Injury	Daylight
I 057	90.6	201501117445	Animal	Wet Rain	06 / 16 / 15 21 :00	V1 V2	South	Normal	Passenger	Straight Ahead	0	0	PD	Darkness
I 057	65.08	201501117449	Rear End	Wet Rain	06 / 16 / 15 22 :00	V1 V2	North North	Normal Normal	Passenger SUV	Straight Ahead Straight Ahead	0	1	C-Injury	Darkness
I 057	91.9	201501118002	Overturned	Wet Rain	06 / 14 / 15 02 :00	V1 V2	South	Had Been Drinking	Motorcycle (Over 150cc)	Straight Ahead	0	1	A-Injury	Darkness
I 057	73.45	201501121491	Animal	Wet Clear	06 / 21 / 15 02 :00	V1 V2	South	Normal	Passenger	Straight Ahead	0	0	PD	Darkness
I 057	71.14	201501123830	Animal	Wet Rain	06 / 26 / 15 00 :00	V1 V2	South	Other/Unknown	Van/Mini-Van	Unknown	0	0	PD	Darkness
I 057	64.13	201501127992	Rear End	Dry Clear	06 / 24 / 15 19 :00	V1 V2	North North	Normal Normal	Passenger Passenger	Straight Ahead Straight Ahead	0	3	B-Injury	Daylight
I 057	73.11	201501132519	Rear End	Dry Clear	06 / 07 / 15 10 :00	V1 V2	South South	Normal Normal	Passenger Pickup	Straight Ahead Straight Ahead	0	1	B-Injury	Darkness
I 057	80.81	201501143197	Overturned	Dry Clear	07 / 26 / 15 02 :00	V1 V2	North	Normal	Passenger	Straight Ahead	0	1	B-Injury	Darkness
I 057	82.78	201501144528	Animal	Dry Clear	07 / 26 / 15 20 :00	V1 V2	South	Normal	Tractor With Semi-Trailer	Straight Ahead	0	0	PD	Darkness
I 057	80.6	201501146575	Rear End	Dry Clear	07 / 22 / 15 17 :00	V1 V2	South South	Normal Normal	Tractor With Semi-Trailer Van/Mini-Van	Straight Ahead Slow/Stop In Traffic	0	3	A-Injury	Daylight
I 057	90.77	201501147576	Animal	Wet Rain	04 / 25 / 15 20 :00	V1 V2	North	Normal	Passenger	Straight Ahead	0	0	PD	Dusk

ILLINOIS DEPARTMENT OF TRANSPORTATION

GIS Crash Report Details: 2010-2015 Crashes

I-57 Herrin Rd to I-64

Route	Mile	Case ID#	Collision Type	Surface /Weather	Crash Date Time		Direction	Driver Condition	Vehicle Type	Maneuver Code	Fatal Count	Injury Count	Injury Type	Lighting
I 057	71.37	201501150883	Rear End	Dry Clear	08 / 01 / 15 12 :00	V1 V2	North North	Normal Normal	Tractor With Semi-Trailer SUV	Straight Ahead Slow/Stop In Traffic	0	1	B-Injury	Daylight
I 057	68.58	201501150887	Animal	Dry Clear	07 / 24 / 15 07 :00	V1 V2	South	Normal	Passenger	Straight Ahead	0	0	PD	Daylight
I 057	72.85	201501151740	Overturned	Dry Clear	08 / 01 / 15 02 :00	V1 V2	South	Normal	SUV	Skidding/Control Loss	0	2	A-Injury	Darkness
I 057	73.06	201501158951	Animal	Dry Clear	08 / 17 / 15 23 :00	V1 V2	North	Normal	Passenger	Straight Ahead	0	0	PD	Darkness
I 057	69.11	201501158952	Other Non-Collision	Dry Clear	08 / 18 / 15 04 :00	V1 V2	South	Normal	Motorcycle (Over 150cc)	Straight Ahead	0	1	B-Injury	Daylight
I 057	63.17	201501168719	Overturned	Dry Clear	08 / 21 / 15 21 :00	V1 V2	North	Normal	Passenger	Straight Ahead	0	2	B-Injury	Darkness
I 057	60.64	201501181847	Fixed Object	Dry Clear	07 / 26 / 15 06 :00	V1 V2	South	Normal	SUV	Skidding/Control Loss	0	3	B-Injury	Daylight
I 057	67.43	201501181852	Sideswipe Same Direction	Dry Clear	08 / 07 / 15 07 :00	V1 V2	South South	Normal Normal	Pickup Passenger	Merging Avoiding Vehicle/Objects	0	1	B-Injury	Daylight
I 057	86.83	201501183574	Animal	Dry Clear	09 / 13 / 15 02 :00	V1 V2	North	Normal	Passenger	Straight Ahead	0	0	PD	Darkness
I 057	73.37	201501191304	Animal	Wet Clear	08 / 30 / 15 06 :00	V1 V2	North	Normal	Passenger	Straight Ahead	0	0	PD	Daylight
I 057	77.12	201501206746	Animal	Dry Clear	10 / 04 / 15 06 :00	V1 V2	North	Normal	SUV	Straight Ahead	0	0	PD	Darkness
I 057	62.61	201501209943	Overturned	Dry Clear	01 / 17 / 15 00 :00	V1 V2	North	Normal	Tractor With Semi-Trailer	Passing/Overtaking	0	0	PD	Darkness
I 057	66.97	201501211012	Animal	Dry Clear	09 / 24 / 15 21 :00	V1 V2	North	Normal	Passenger	Straight Ahead	0	0	PD	Darkness

ILLINOIS DEPARTMENT OF TRANSPORTATION

GIS Crash Report Details: 2010-2015 Crashes

I-57 Herrin Rd to I-64

Route	Mile	Case ID#	Collision Type	Surface /Weather	Crash Date Time		Direction	Driver Condition	Vehicle Type	Maneuver Code	Fatal Count	Injury Count	Injury Type	Lighting
I 057	67.46	201501211040	Animal	Dry Clear	09 / 25 / 15 19 :00	V1 V2	South	Normal	Passenger	Straight Ahead	0	0	PD	Darkness
I 057	70.07	201501211043	Rear End	Dry Clear	10 / 04 / 15 15 :00	V1 V2	South South	Normal Normal	Passenger Passenger	Skidding/Control Loss Straight Ahead	0	2	B-Injury	Daylight
I 057	65.08	201501226047	Animal	Dry Clear	10 / 26 / 15 06 :00	V1 V2	South	Normal	Passenger	Straight Ahead	0	0	PD	Dawn
I 057	65.06	201501231095	Animal	Dry Clear	10 / 23 / 15 09 :00	V1 V2	North	Normal	Truck Single Unit	Straight Ahead	0	0	PD	Darkness
I 057	76.04	201501231096	Animal	Dry Clear	10 / 29 / 15 06 :00	V1 V2	South	Normal	Pickup	Straight Ahead	0	0	PD	Darkness
I 057	90.38	201501231712	Animal	Dry Clear	10 / 30 / 15 05 :00	V1 V2	Southeast	Normal	Passenger	Straight Ahead	0	0	PD	Darkness
I 057	76.79	201501232725	Animal	Dry Clear	10 / 31 / 15 01 :00	V1 V2	North	Normal	Truck Single Unit	Straight Ahead	0	0	PD	Darkness
I 057	74.14	201501235791	Animal	Dry Clear	10 / 25 / 15 19 :00	V1 V2	North	Normal	Passenger	Straight Ahead	0	0	PD	Darkness
I 057	62.12	201501235802	Animal	Dry Clear	09 / 22 / 15 22 :00	V1 V2	North	Normal	Tractor With Semi-Trailer	Straight Ahead	0	0	PD	Darkness
I 057	61.09	201501235815	Animal	Dry Clear	10 / 25 / 15 01 :00	V1 V2	South	Normal	Passenger	Straight Ahead	0	0	PD	Darkness
I 057	59.19	201501235816	Animal	Dry Clear	10 / 11 / 15 20 :00	V1 V2	North	Normal	Pickup	Straight Ahead	0	0	PD	Darkness
I 057	83.57	201501235818	Animal	Dry Clear	10 / 25 / 15 22 :00	V1 V2	South	Normal	Passenger	Straight Ahead	0	0	PD	Darkness
I 057	73.13	201501239858	Animal	Dry Clear	11 / 01 / 15 22 :00	V1 V2	North	Normal	Passenger	Straight Ahead	0	0	PD	Darkness

ILLINOIS DEPARTMENT OF TRANSPORTATION

GIS Crash Report Details: 2010-2015 Crashes

I-57 Herrin Rd to I-64

Route	Mile	Case ID#	Collision Type	Surface /Weather	Crash Date Time		Direction	Driver Condition	Vehicle Type	Maneuver Code	Fatal Count	Injury Count	Injury Type	Lighting
I 057	74.2	201501239861	Animal	Dry Clear	11 / 06 / 15 22 :00	V1 V2	North	Normal	Tractor With Semi-Trailer	Straight Ahead	0	0	PD	Darkness
I 057	71.08	201501239867	Animal	Dry Clear	10 / 28 / 15 09 :00	V1 V2	North	Normal	Passenger	Straight Ahead	0	0	PD	Darkness
I 057	86.26	201501239868	Animal	Dry Clear	11 / 06 / 15 09 :00	V1 V2	North	Normal	Passenger	Straight Ahead	0	0	PD	Darkness
I 057	87.43	201501239876	Animal	Dry Clear	11 / 01 / 15 00 :00	V1 V2	North	Normal	Passenger	Straight Ahead	0	0	PD	Darkness
I 057	82.99	201501242122	Animal	Dry Clear	11 / 08 / 15 12 :00	V1 V2	North	Normal	Passenger	Straight Ahead	0	0	PD	Darkness
I 057	59.08	201501246372	Animal	Dry Clear	11 / 12 / 15 22 :00	V1 V2	South	Normal	Passenger	Straight Ahead	0	0	PD	Darkness
I 057	62.38	201501247250	Animal	Dry Clear	11 / 15 / 15 10 :00	V1 V2	North	Normal	Pickup	Straight Ahead	0	0	PD	Daylight
I 057	67.8	201501248427	Animal	Dry Clear	11 / 07 / 15 07 :00	V1 V2	South	Normal	Tractor With Semi-Trailer	Straight Ahead	0	0	PD	Daylight
I 057	71.28	201501248931	Animal		11 / 12 / 15 05 :00	V1 V2	South	Normal	Tractor With Semi-Trailer	Straight Ahead	0	0	PD	Darkness
I 057	86.57	201501250275	Animal	Dry Clear	11 / 15 / 15 23 :00	V1 V2	South	Normal	Passenger	Straight Ahead	0	0	PD	Darkness
I 057	64.38	201501259058	Animal	Dry Clear	11 / 24 / 15 04 :00	V1 V2	South	Normal	Passenger	Straight Ahead	0	0	PD	Darkness
I 057	62.04	201501259087	Animal	Dry Clear	11 / 18 / 15 18 :00	V1 V2	South	Normal	Passenger	Straight Ahead	0	0	PD	Darkness
I 057	91.03	201501259117	Animal	Dry Clear	11 / 24 / 15 23 :00	V1 V2	South	Normal	Passenger	Straight Ahead	0	0	PD	Darkness

ILLINOIS DEPARTMENT OF TRANSPORTATION

GIS Crash Report Details: 2010-2015 Crashes

I-57 Herrin Rd to I-64

Route	Mile	Case ID#	Collision Type	Surface /Weather	Crash Date Time		Direction	Driver Condition	Vehicle Type	Maneuver Code	Fatal Count	Injury Count	Injury Type	Lighting
I 057	75.74	201501262044	Animal	Dry Clear	11 / 20 / 15 23 :00	V1 V2	North	Normal	Passenger	Straight Ahead	0	0	PD	Darkness
I 057	69.29	201501262045	Animal	Wet Rain	11 / 27 / 15 21 :00	V1 V2	South	Normal	Passenger	Straight Ahead	0	0	PD	Darkness
I 057	67.92	201501262055	Animal	Dry Clear	11 / 27 / 15 03 :00	V1 V2	South	Normal	SUV	Straight Ahead	0	0	PD	Darkness
I 057	79.72	201501263156	Animal	Dry Clear	11 / 25 / 15 00 :00	V1 V2	South	Normal	Van/Mini-Van	Straight Ahead	0	0	PD	Darkness
I 057	70.2	201501263743	Animal	Dry Clear	11 / 22 / 15 17 :00	V1 V2	North	Normal	Tractor With Semi-Trailer	Straight Ahead	0	0	PD	Darkness
I 057	91.9	201501265431	Animal	Dry Clear	11 / 21 / 15 20 :00	V1 V2	North	Normal	Passenger	Straight Ahead	0	0	PD	Darkness, Lighted Road
I 057	73.32	201501268557	Overturned	Dry Clear	08 / 07 / 15 06 :00	V1 V2	North	Normal	Van/Mini-Van	Straight Ahead	0	1	B-Injury	Daylight
I 057	62.1	201501269437	Animal	Wet Clear	11 / 29 / 15 02 :00	V1 V2	North	Normal	Passenger	Straight Ahead	0	0	PD	Darkness
I 057	63.21	201501269438	Animal	Dry Clear	11 / 29 / 15 22 :00	V1 V2	South	Normal	Passenger	Straight Ahead	0	0	PD	Darkness
I 057	75.99	201501271773	Animal	Dry Clear	12 / 06 / 15 01 :00	V1 V2	South	Normal	Passenger	Straight Ahead	0	0	PD	Darkness
I 057	62.92	201501272606	Sideswipe Same Direction	Dry Clear	11 / 05 / 15 11 :00	V1 V2	North North	Normal Normal	Passenger Tractor With Semi-Trailer	Passing/Overtaking Straight Ahead	0	1	B-Injury	Daylight
I 057	59.16	201501273268	Fixed Object	Dry Clear	12 / 03 / 15 03 :00	V1 V2	North	Normal	Van/Mini-Van	Skidding/Control Loss	0	1	B-Injury	Darkness
I 057	90.22	201501275554	Sideswipe Same Direction	Wet Rain	11 / 17 / 15 23 :00	V1 V2	North North	Normal Normal	Tractor With Semi-Trailer Passenger	Passing/Overtaking Straight Ahead	0	2	B-Injury	Darkness

ILLINOIS DEPARTMENT OF TRANSPORTATION

GIS Crash Report Details: 2010-2015 Crashes

I-57 Herrin Rd to I-64

Route	Mile	Case ID#	Collision Type	Surface /Weather	Crash Date Time		Direction	Driver Condition	Vehicle Type	Maneuver Code	Fatal Count	Injury Count	Injury Type	Lighting
I 057	87.19	201501280249	Animal	Wet Clear	12 / 14 / 15 04 :00	V1 V2	North	Normal	Tractor With Semi-Trailer	Straight Ahead	0	0	PD	Darkness
I 057	86.84	201501280266	Animal	Dry Clear	12 / 14 / 15 23 :00	V1 V2	South	Normal	SUV	Straight Ahead	0	1	B-Injury	Darkness
I 057	68.11	201501286003	Animal	Dry Clear	12 / 16 / 15 22 :00	V1 V2	South	Normal	Pickup	Straight Ahead	0	0	PD	Darkness
I 057	64.35	201501288197	Rear End	Dry Clear	12 / 22 / 15 12 :00	V1 V2	North North	Normal Normal	Tractor With Semi-Trailer Pickup	Straight Ahead Slow/Stop In Traffic	0	2	B-Injury	Daylight
I 057	62.95	201501289986	Animal	Dry Clear	12 / 25 / 15 04 :00	V1 V2	South	Normal	Tractor With Semi-Trailer	Straight Ahead	0	0	PD	Darkness
I 057	74.07	201501297099	Animal	Dry Clear	12 / 31 / 15 01 :00	V1 V2	North	Normal	Van/Mini-Van	Straight Ahead	0	0	PD	Darkness
I 057	81.13	201501317322	Overturned	Dry Clear	03 / 08 / 15 14 :00	V1 V2	South	Fatigued	Passenger	Skidding/Control Loss	0	1	B-Injury	Daylight
I 057	77.12	201501323398	Rear End	Dry Clear	05 / 22 / 15 19 :00	V1 V2	North North	Normal Normal	Motorcycle (Over 150cc) Passenger	Straight Ahead Slow/Stop In Traffic	0	1	A-Injury	Darkness
I 057	72.28	201501344704	Fixed Object	Dry Clear	12 / 03 / 15 07 :00	V1 V2	North	Normal	Passenger	Skidding/Control Loss	0	0	PD	Daylight
I 057	77.19	201501382683	Animal	Dry Clear	10 / 26 / 15 04 :00	V1 V2	North	Normal	Passenger	Straight Ahead	0	0	PD	Darkness
I 057	61.1	201501383185	Animal	Dry Clear	10 / 29 / 15 16 :00	V1 V2	North	Other/Unknown	Pickup	Straight Ahead	0	0	PD	Darkness
I 057	67.61	201501385451	Animal	Dry Clear	11 / 21 / 15 01 :00	V1 V2	North	Normal	Van/Mini-Van	Straight Ahead	0	0	PD	Darkness
I 057	77.12	201501386692	Animal	Dry Clear	12 / 12 / 15 19 :00	V1 V2	North	Other/Unknown	Passenger	Straight Ahead	0	0	PD	Darkness

ILLINOIS DEPARTMENT OF TRANSPORTATION

GIS Crash Report Details: 2010-2015 Crashes

I-57 Herrin Rd to I-64

Route	Mile	Case ID#	Collision Type	Surface /Weather	Crash Date Time		Direction	Driver Condition	Vehicle Type	Maneuver Code	Fatal Count	Injury Count	Injury Type	Lighting
I 057	75.11	201501391567	Animal	Dry Fog/Smoke/Haze	11 / 04 / 15 04 :00	V1 V2	North	Normal	Passenger	Straight Ahead	0	0	PD	Darkness
I 057	59.1	201501405212	Animal	Dry Fog/Smoke/Haze	11 / 02 / 15 03 :00	V1 V2	North	Normal	Pickup	Straight Ahead	0	0	PD	Darkness
I 064	78.23	201001120152	Animal	Dry Clear	05 / 10 / 10 03 :00	V1 V2	West	Normal	Passenger	Straight Ahead	0	0	PD	Darkness
I 064	78.22	201101146289	Animal	Dry Clear	05 / 18 / 11 05 :00	V1 V2	West	Normal	Tractor With Semi-Trailer	Straight Ahead	0	0	PD	Darkness
I 064	78.23	201101455039	Rear End	Dry Clear	12 / 26 / 11 18 :00	V1 V2	East East	Normal Normal	Passenger Passenger	Straight Ahead Straight Ahead	0	0	PD	Darkness
I 064	78.42	201201081684	Animal	Dry Clear	04 / 07 / 12 06 :00	V1 V2	West	Normal	Pickup	Straight Ahead	0	0	PD	Daylight
I 064	78.09	201301010220	Fixed Object	Wet Clear	01 / 01 / 13 18 :00	V1 V2	South	Normal	Passenger	Skidding/Control Loss	0	0	PD	Darkness
I 064	78.22	201400351182	Rear End	Dry Clear	12 / 20 / 14 01 :00	V1 V2	South South	Alcohol Impaired Normal	Passenger Pickup	Skidding/Control Loss Straight Ahead	0	2	A-Injury	Darkness
I 064	78.33	201501188193	Fixed Object	Dry Clear	01 / 16 / 15 18 :00	V1 V2	Southeast	Alcohol Impaired	Pickup	Negotiating A Curve	0	0	PD	Darkness
IL149	35.45	201001049014	Turning	Wet Clear	01 / 11 / 10 08 :00	V1 V2	West South	Normal Normal	Pickup Van/Mini-Van	Straight Ahead Turning Left	0	2	C-Injury	Daylight
IL149	35.61	201001049081	Rear End	Dry Clear	01 / 25 / 10 16 :00	V1 V2	North North	Normal Normal	Passenger Passenger	Straight Ahead Straight Ahead	0	0	PD	Daylight
IL149	35.45	201001068050	Rear End	Wet Rain	02 / 05 / 10 14 :00	V1 V2	West West	Normal Normal	Van/Mini-Van SUV	Straight Ahead Slow/Stop - Left Turn	0	0	PD	Daylight
IL149	35.61	201001098093	Turning	Dry Clear	02 / 23 / 10 16 :00	V1 V2	West North	Normal Normal	Pickup Pickup	Straight Ahead Turning Left	0	0	PD	Daylight

ILLINOIS DEPARTMENT OF TRANSPORTATION

GIS Crash Report Details: 2010-2015 Crashes

I-57 Herrin Rd to I-64

Route	Mile	Case ID#	Collision Type	Surface /Weather	Crash Date Time		Direction	Driver Condition	Vehicle Type	Maneuver Code	Fatal Count	Injury Count	Injury Type	Lighting
IL149	35.61	201001124174	Turning	Dry Clear	03 / 03 / 10 14 :00	V1 V2	Northeast Northeast	Other/Unknown Normal	Tractor With Semi-Trailer Passenger	Turning Right Turning Right	0	0	PD	Daylight
IL149	35.61	201001141550	Fixed Object	Dry Clear	03 / 25 / 10 04 :00	V1 V2	North	Drug Impaired	Passenger	Straight Ahead	0	1	A-Injury	Darkness, Lighted Road
IL149	35.61	201001235688	Rear End	Dry Clear	06 / 14 / 10 12 :00	V1 V2	East East	Normal Normal	Passenger SUV	Straight Ahead Slow/Stop In Traffic	0	2	C-Injury	Daylight
IL149	35.45	201001248771	Turning	Clear	07 / 18 / 10 16 :00	V1 V2	East West	Other/Unknown Normal	Passenger Passenger	Straight Ahead Turning Left	0	0	PD	Daylight
IL149	35.45	201001332039	Sideswipe Same Direction	Dry	09 / 23 / 10 10 :00	V1 V2	West West	Normal Normal	Passenger Passenger	Straight Ahead Slow/Stop - Left Turn	0	0	PD	Daylight
IL149	35.61	201001464471	Rear End	Wet Clear	12 / 29 / 10 16 :00	V1 V2	East East	Normal Normal	SUV Passenger	Slow/Stop In Traffic Slow/Stop In Traffic	0	0	PD	Darkness, Lighted Road
IL149	35.61	201101058026	Rear End	Dry Clear	01 / 06 / 11 11 :00	V1 V2	West West	Normal Normal	Passenger Passenger	Unknown Unknown	0	0	PD	Daylight
IL149	35.45	201101168972	Turning	Dry Clear	05 / 10 / 11 14 :00	V1 V2	South East	Normal Normal	Passenger Passenger	Turning Left Straight Ahead	0	2	C-Injury	Daylight
IL149	35.45	201101169567	Rear End	Wet Rain	05 / 23 / 11 15 :00	V1 V2	South South	Fatigued Normal	Passenger Pickup	Straight Ahead Straight Ahead	0	0	PD	Daylight
IL149	35.61	201101214622	Rear End	Dry Clear	06 / 01 / 11 14 :00	V1 V2	North North	Normal Normal	Passenger Passenger	Starting In Traffic Slow/Stop - Right Turn	0	1	C-Injury	Daylight
IL149	35.45	201101296735	Turning	Dry Clear	08 / 09 / 11 08 :00	V1 V2	Southwest West	Normal Normal	Pickup Pickup	Turning Right Straight Ahead	0	0	PD	Daylight
IL149	35.48	201101365142	Animal	Wet Clear	11 / 21 / 11 18 :00	V1 V2	West	Normal	Passenger	Straight Ahead	0	0	PD	Darkness, Lighted Road
IL149	35.61	201101375866	Turning	Dry Clear	10 / 24 / 11 14 :00	V1 V2	East West	Normal Normal	Passenger Passenger	Turning Left Straight Ahead	0	0	PD	Daylight

ILLINOIS DEPARTMENT OF TRANSPORTATION

GIS Crash Report Details: 2010-2015 Crashes

I-57 Herrin Rd to I-64

Route	Mile	Case ID#	Collision Type	Surface /Weather	Crash Date Time		Direction	Driver Condition	Vehicle Type	Maneuver Code	Fatal Count	Injury Count	Injury Type	Lighting
IL149	35.61	201101410832	Rear End	Wet Rain	11 / 28 / 11 09 :00	V1 V2	West West	Normal Normal	Other Pickup	Straight Ahead Slow/Stop In Traffic	0	2	C-Injury	Daylight
IL149	35.61	201101411409	Angle	Dry Clear	10 / 29 / 11 16 :00	V1 V2	South West	Normal Normal	Passenger SUV	Unknown Straight Ahead	0	0	PD	Daylight
IL149	35.61	201101444225	Turning	Dry Clear	12 / 09 / 11 05 :00	V1 V2	East Northwest	Normal Normal	Passenger Pickup	Straight Ahead Turning Left	0	0	PD	Darkness
IL149	35.61	201201034177	Turning	Dry Clear	01 / 03 / 12 16 :00	V1 V2	East West	Normal Normal	Passenger Passenger	Turning Left Straight Ahead	0	2	C-Injury	Dusk
IL149	35.45	201201034255	Turning	Dry Clear	01 / 24 / 12 09 :00	V1 V2	South East	Normal Normal	Pickup Passenger	Turning Left Straight Ahead	0	0	PD	Daylight
IL149	35.45	201201057930	Turning	Wet Rain	02 / 15 / 12 19 :00	V1 V2	West South	Normal Normal	SUV SUV	Straight Ahead Turning Left	0	1	B-Injury	Darkness, Lighted Road
IL149	35.49	201201073254	Fixed Object	Dry Clear	02 / 14 / 12 14 :00	V1 V2	East	Normal	Passenger	Straight Ahead	0	0	PD	Daylight
IL149	35.45	201201080730	Turning	Dry Clear	03 / 30 / 12 12 :00	V1 V2	East East	Normal Normal	SUV Pickup	Straight Ahead Turning Left	0	2	B-Injury	Daylight
IL149	35.61	201201109935	Rear End	Wet Clear	04 / 12 / 12 15 :00	V1 V2	West West	Normal Normal	Passenger Pickup	Slow/Stop In Traffic Slow/Stop In Traffic	0	0	PD	Daylight
IL149	35.61	201201141663	Angle	Dry Clear	05 / 05 / 12 22 :00	V1 V2	North West	Normal Normal	Pickup Pickup	Straight Ahead Starting In Traffic	0	0	PD	Darkness
IL149	35.61	201201163513	Rear End	Dry Clear	06 / 09 / 12 17 :00	V1 V2	West West	Normal Normal	Passenger Truck Single Unit	Slow/Stop In Traffic Straight Ahead	0	2	B-Injury	Daylight
IL149	35.45	201201173127	Rear End	Dry Clear	04 / 06 / 12 13 :00	V1 V2	South South	Normal Normal	SUV Passenger	Slow/Stop In Traffic Slow/Stop In Traffic	0	0	PD	Daylight
IL149	35.45	201201252155	Rear End	Dry Clear	10 / 12 / 12 17 :00	V1 V2	East East	Normal Normal	Passenger Passenger	Straight Ahead Slow/Stop In Traffic	0	0	PD	Daylight

ILLINOIS DEPARTMENT OF TRANSPORTATION

GIS Crash Report Details: 2010-2015 Crashes

I-57 Herrin Rd to I-64

Route	Mile	Case ID#	Collision Type	Surface /Weather	Crash Date Time		Direction	Driver Condition	Vehicle Type	Maneuver Code	Fatal Count	Injury Count	Injury Type	Lighting
IL149	35.45	201201265990	Angle	Dry Clear	10 / 27 / 12 17 :00	V1 V2	South West	Normal Normal	Tractor With Semi-Trailer Passenger	Straight Ahead Stralght Ahead	0	0	PD	Daylight
IL149	35.45	201201365254	Turning	Dry Clear	11 / 30 / 12 17 :00	V1 V2	West East	Normal Normal	Passenger Pickup	Turning Left Straight Ahead	0	1	B-Injury	Dusk
IL149	35.61	201201399593	Rear End	Dry Clear	11 / 06 / 12 10 :00	V1 V2	Unknown Unknown	Other/Unknown Normal	Passenger Passenger	Straight Ahead Slow/Stop - Right Turn	0	0	PD	Daylight
IL149	35.61	201201406294	Turning	Dry Clear	03 / 08 / 12 15 :00	V1 V2	Northeast West	Normal Normal	Tractor With Semi-Trailer Passenger	Turning Left Straight Ahead	0	2	B-Injury	Daylight
IL149	35.45	201201427128	Turning	Dry Clear	12 / 14 / 12 17 :00	V1 V2	West East	Normal Normal	Passenger Passenger	Turning Left Straight Ahead	0	2	B-Injury	Darkness, Lighted Road
IL149	35.45	201301041455	Rear End	Dry Clear	01 / 07 / 13 18 :00	V1 V2	East East	Other/Unknown Normal	Passenger Pickup	Straight Ahead Slow/Stop In Traffic	0	0	PD	Darkness
IL149	35.45	201301095813	Turning	Wet Snow	02 / 28 / 13 14 :00	V1 V2	South East	Normal Normal	Passenger Passenger	Turning Left Straight Ahead	0	1	C-Injury	Daylight
IL149	35.61	201301100426	Rear End	Wet Rain	03 / 01 / 13 12 :00	V1 V2	West West	Normal Normal	SUV Pickup	Straight Ahead Straight Ahead	0	0	PD	Daylight
IL149	35.61	201301143004	Turning	Dry Clear	06 / 13 / 13 14 :00	V1 V2	East North	Normal Normal	Passenger SUV	Straight Ahead Turning Left	0	0	PD	Daylight
IL149	35.56	201301163553	Animal	Dry Clear	08 / 23 / 13 03 :00	V1 V2	West	Normal	Passenger	Straight Ahead	0	0	PD	Darkness
IL149	35.61	201301321664	Rear End	Dry Clear	08 / 14 / 13 16 :00	V1 V2	North North	Normal Normal	Passenger Passenger	Slow/Stop - Right Turn Slow/Stop - Right Turn	0	0	PD	Daylight
IL149	35.45	201301327753	Turning	Dry Clear	09 / 13 / 13 17 :00	V1 V2	West East	Normal Normal	Passenger Pickup	Turning Left Straight Ahead	0	0	PD	Daylight
IL149	35.61	201301386342	Rear End	Dry Clear	11 / 10 / 13 15 :00	V1 V2	Northeast Northeast	Normal Normal	Passenger SUV	Straight Ahead Straight Ahead	0	0	PD	Daylight

ILLINOIS DEPARTMENT OF TRANSPORTATION

GIS Crash Report Details: 2010-2015 Crashes

I-57 Herrin Rd to I-64

Route	Mile	Case ID#	Collision Type	Surface /Weather	Crash Date Time		Direction	Driver Condition	Vehicle Type	Maneuver Code	Fatal Count	Injury Count	Injury Type	Lighting
IL149	35.61	201301417268	Turning	Dry Cloudy/Overcast	12 / 13 / 13 13 :00	V1 V2	Northwest West	Normal Normal	Passenger SUV	Turning Left Straight Ahead	0	0	PD	Daylight
IL149	35.5	201301454694	Rear End	Dry Clear	06 / 02 / 13 15 :00	V1 V2	East East	Normal Normal	Pickup Passenger	Straight Ahead Other	0	0	PD	Daylight
IL149	35.45	201400132674	Angle	Dry Clear	03 / 04 / 14 17 :00	V1 V2	West South	Normal Normal	Passenger Passenger	Backing Straight Ahead	0	1	B-Injury	Daylight
IL149	35.61	201400208014	Rear End	Dry Clear	08 / 07 / 14 08 :00	V1 V2	West West	Normal Normal	Passenger Pickup	Straight Ahead Slow/Stop In Traffic	0	0	PD	Daylight
IL149	35.61	201400251787	Turning	Dry Clear	05 / 30 / 14 15 :00	V1 V2	Northeast East	Normal Normal	Passenger Passenger	Turning Right Straight Ahead	0	0	PD	Daylight
IL149	35.51	201400460662	Fixed Object	Dry Clear	12 / 29 / 14 22 :00	V1 V2	North	Alcohol Impaired	Passenger	Turning Right	0	1	B-Injury	Darkness, Lighted Road
IL149	35.45	201501334858	Rear End	Dry Clear	07 / 21 / 15 12 :00	V1 V2	West West	Normal Normal	Pickup Passenger	Straight Ahead Slow/Stop In Traffic	0	2	C-Injury	Daylight
IL154	63.35	201101306464	Angle	Dry Clear	09 / 28 / 11 08 :00	V1 V2	North West	Normal Normal	Tractor With Semi-Trailer Motor Driven Cycle	Straight Ahead Stralght Ahead	0	2	A-Injury	Daylight
IL154	63.35	201400444779	Turning	Wet Rain	11 / 23 / 14 19 :00	V1 V2	West North	Normal Normal	Passenger Passenger	Straight Ahead Turning Right	0	0	PD	Darkness
IL154	63.19	201400454586	Animal	Dry Clear	12 / 10 / 14 20 :00	V1 V2	West	Normal	SUV	Straight Ahead	0	0	PD	Darkness
TS918	3.94	201001043040	Rear End	Dry Clear	01 / 04 / 10 17 :00	V1 V2	Southwest Southwest	Normal Normal	Pickup Passenger	Slow/Stop - Right Turn Straight Ahead	0	0	PD	Darkness, Lighted Road
TS918	3.94	201001182495	Turning	Dry Clear	03 / 20 / 10 20 :00	V1 V2	South East	Normal Other/Unknown	Passenger Unknown	Turning Left Straight Ahead	0	0	PD	Darkness, Lighted Road

Total Injuries: 417

Total Fatalities: 10

Total Crashes: 121
5

DATE: 08/10/2016

ILLINOIS DEPARTMENT OF TRANSPORTATION

GIS Crash Report Details: 2010-2015 Crashes

I-57 Herrin Rd to I-64

Route	Mile	Case ID#	Collision Type	Surface /Weather	Crash Date Time	Direction	Driver Condition	Vehicle Type	Maneuver Code	Fatal Count	Injury Count	Injury Type	Lighting

ILLINOIS DEPARTMENT OF TRANSPORTATION

GIS Crash Report Details: 2010-2015 Crashes

I-57 Herrin Rd to I-64

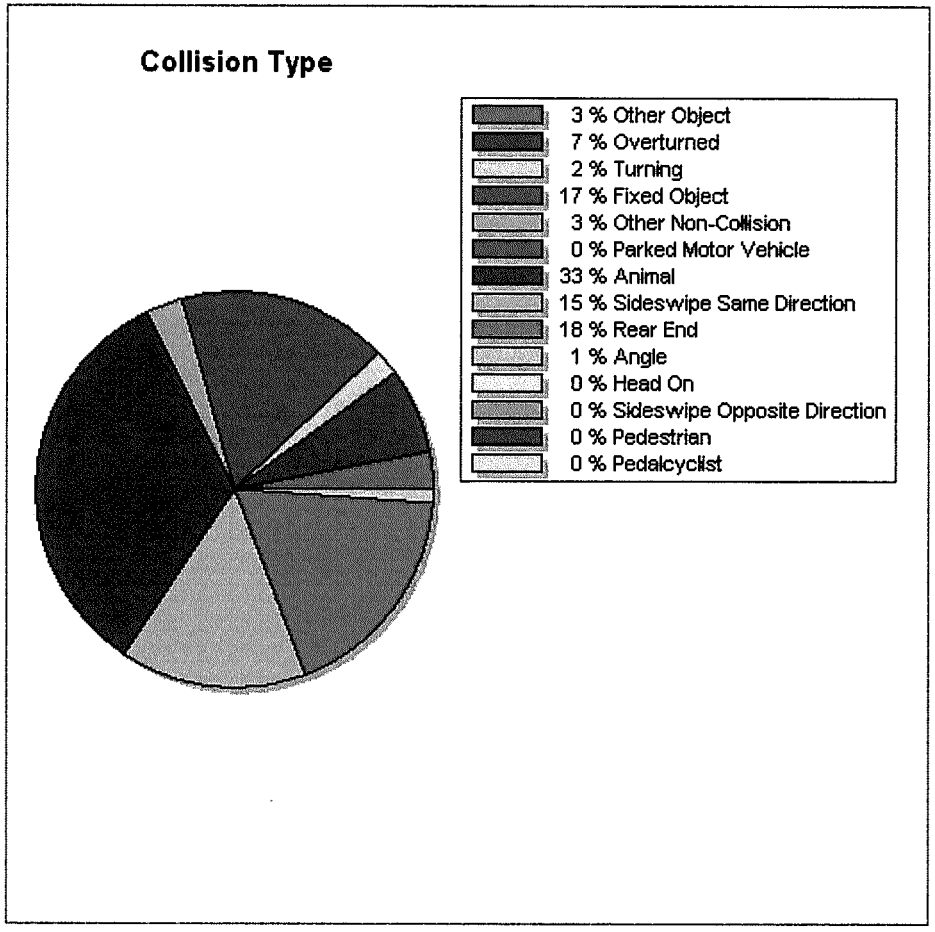

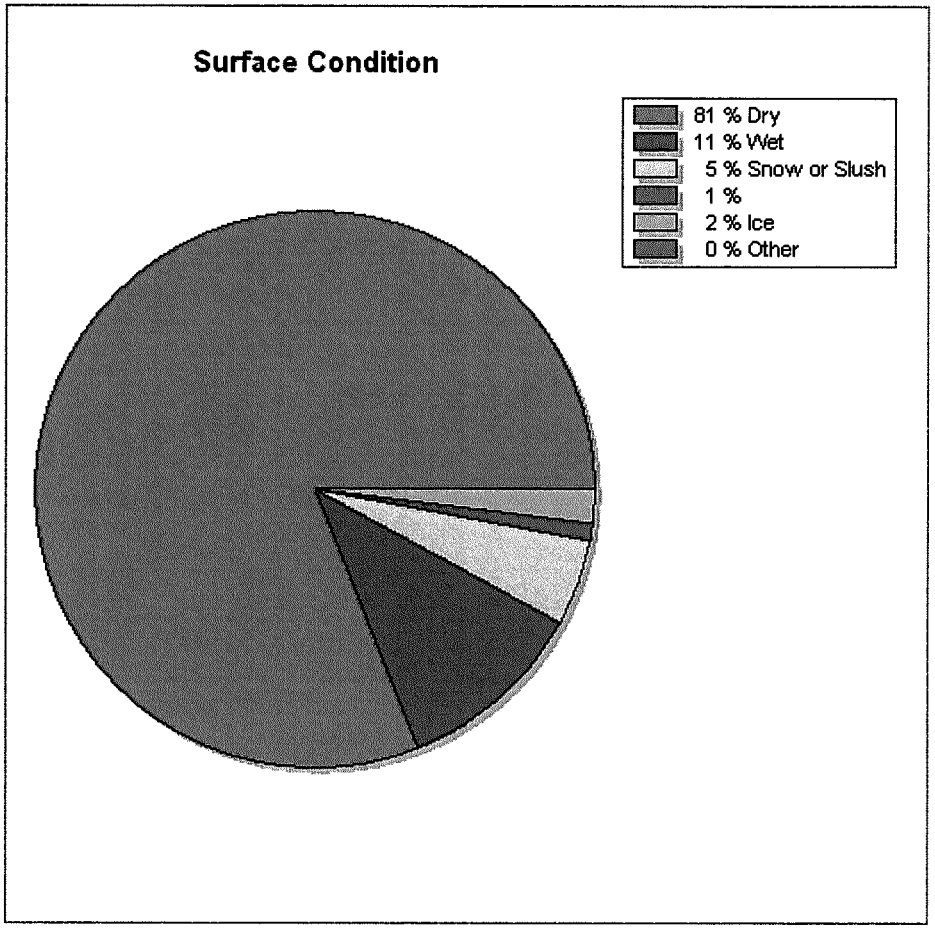

ILLINOIS DEPARTMENT OF TRANSPORTATION

GIS Crash Report Details: 2010-2015 Crashes

I-57 Herrin Rd to I-64

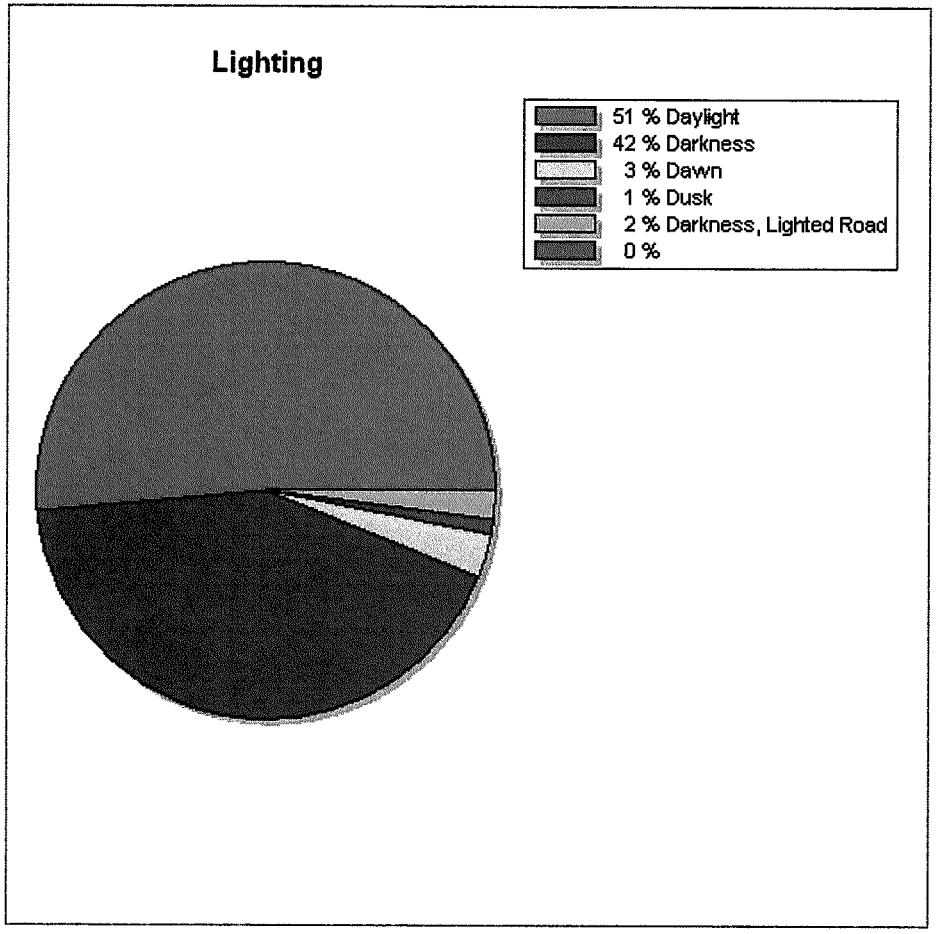

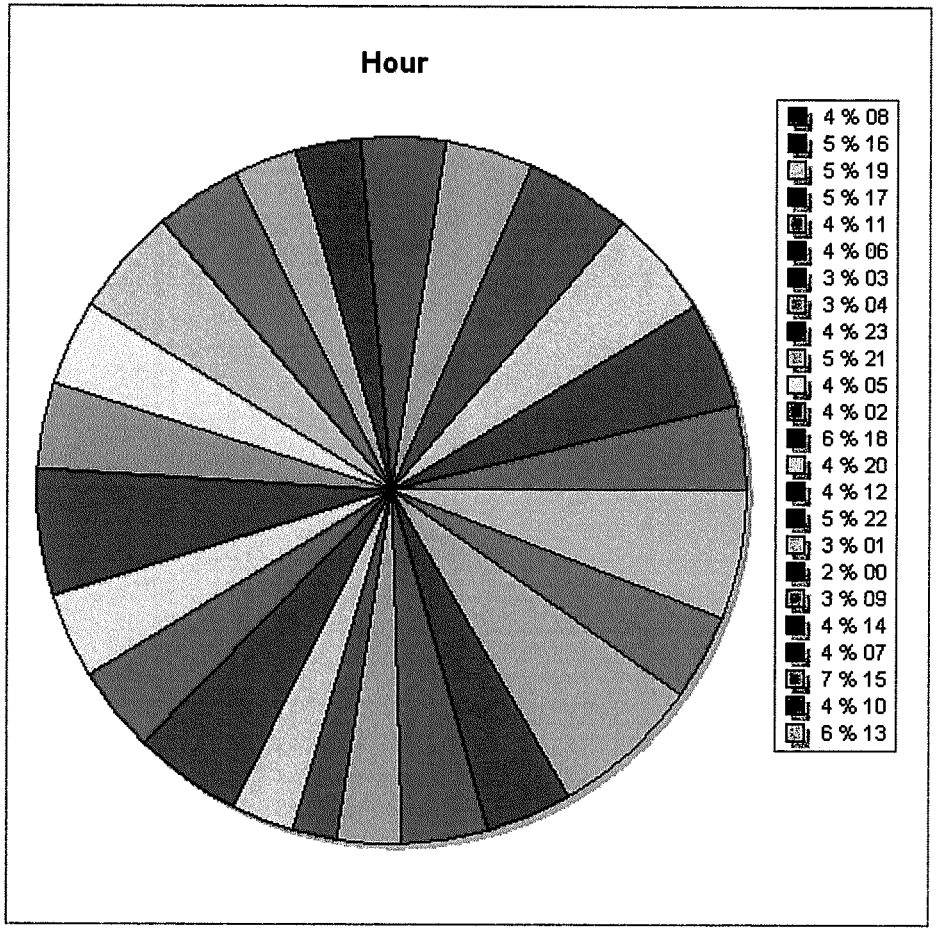

ILLINOIS DEPARTMENT OF TRANSPORTATION

GIS Crash Report Details: 2010-2015 Crashes

I-57 Herrin Rd to I-64

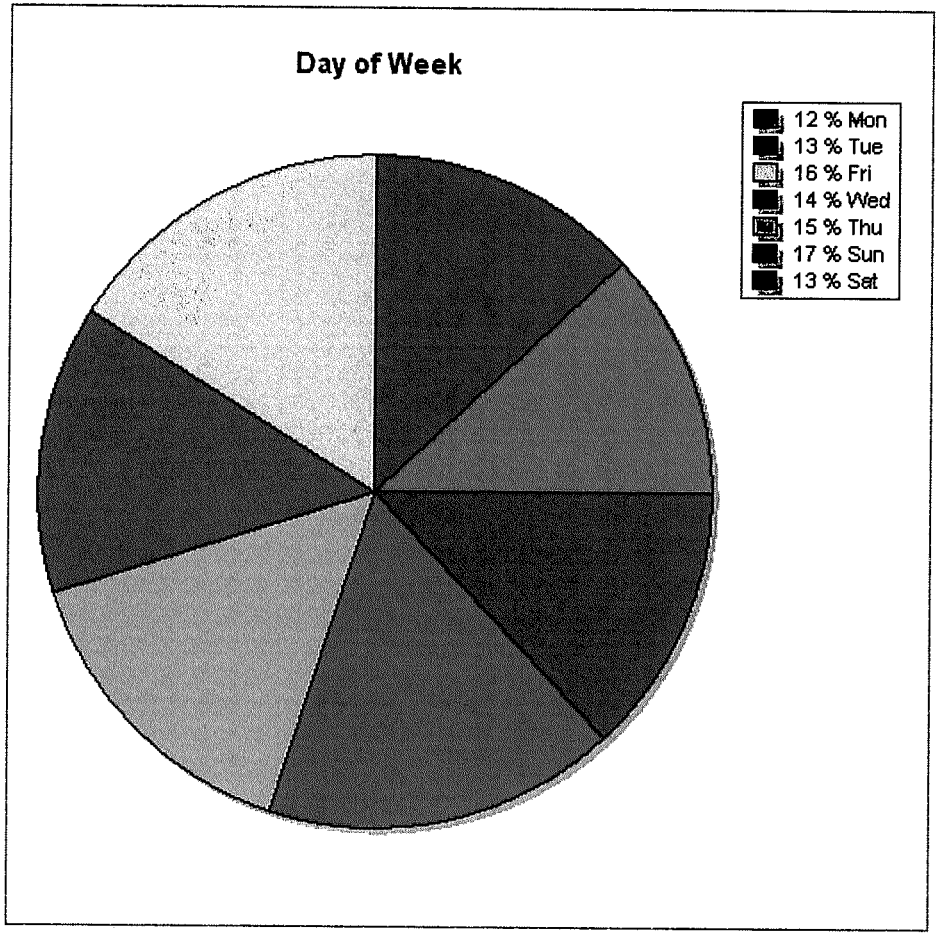

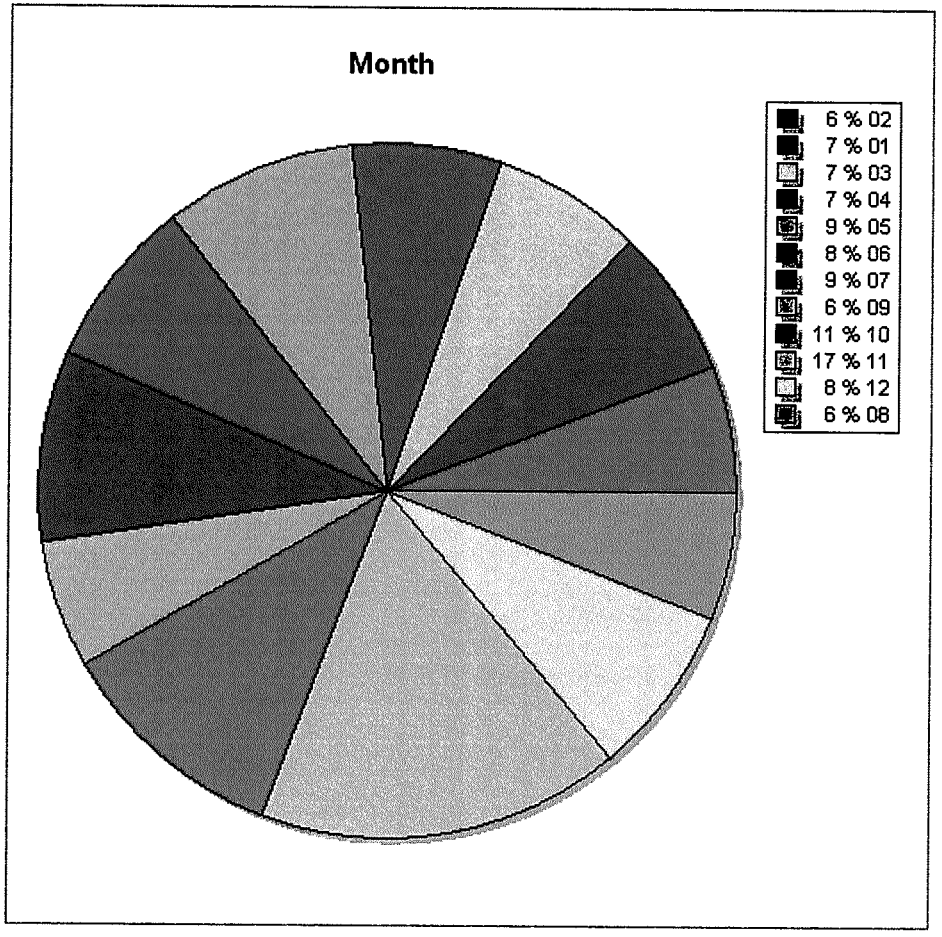

ILLINOIS DEPARTMENT OF TRANSPORTATION

GIS Crash Report Details: 2010-2015 Crashes

I-57 Herrin Rd to I-64

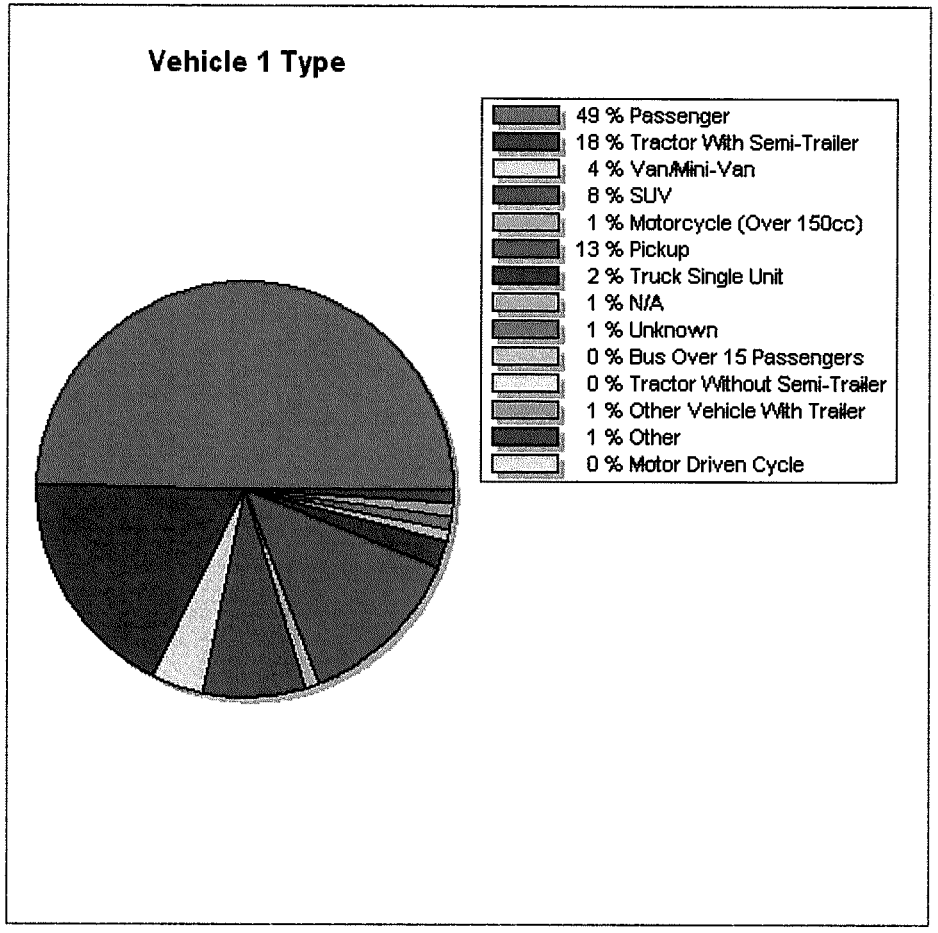

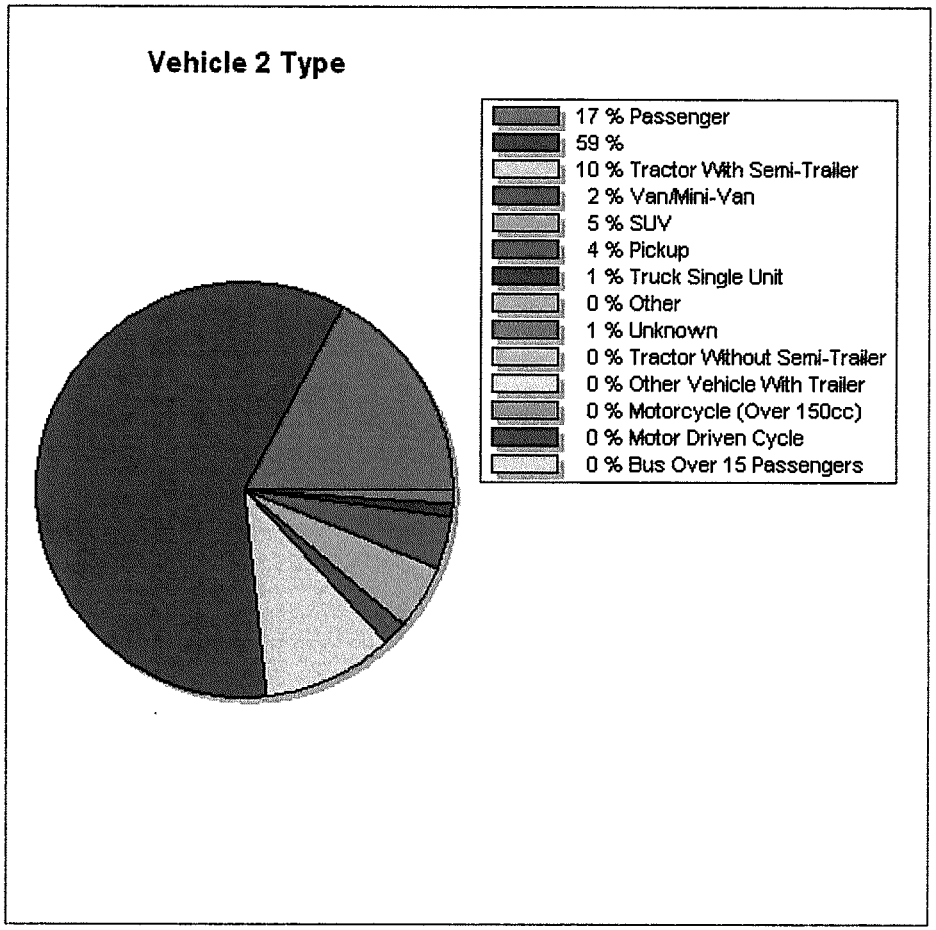

ILLINOIS DEPARTMENT OF TRANSPORTATION

GIS Crash Report Details: 2010-2015 Crashes

I-57 Herrin Rd to I-64

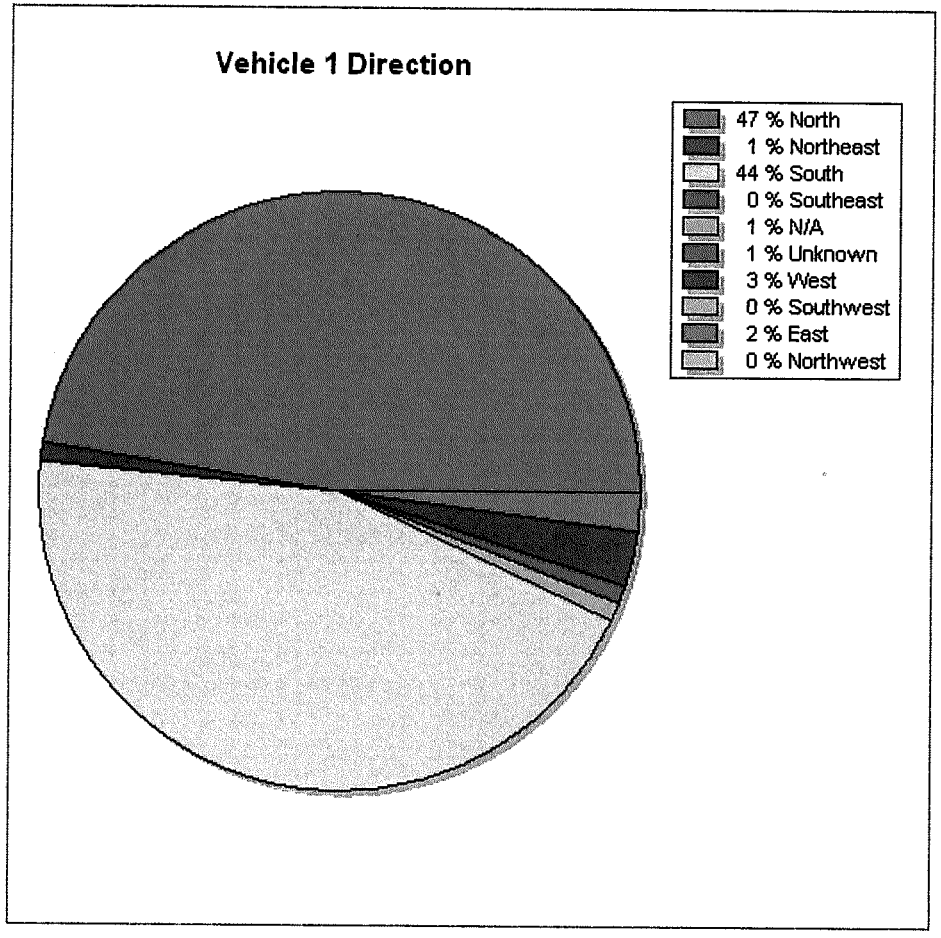

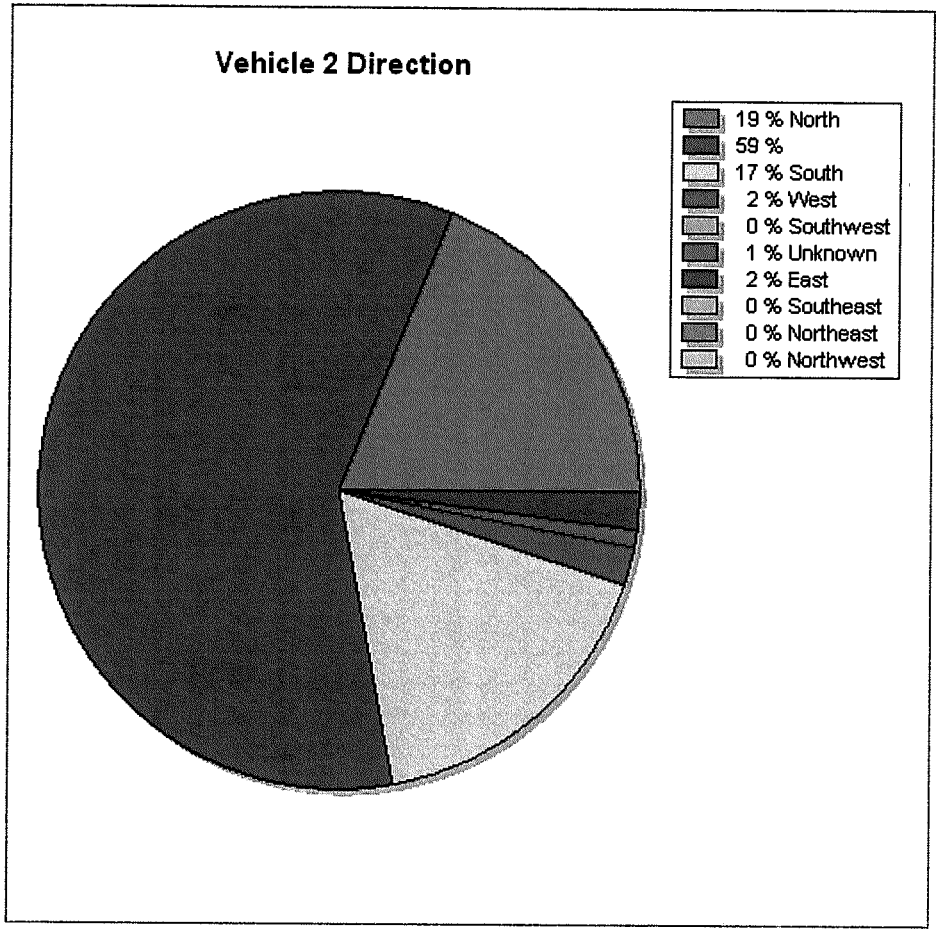

ILLINOIS DEPARTMENT OF TRANSPORTATION

GIS Crash Report Details: 2010-2015 Crashes

I-57 Herrin Rd to I-64

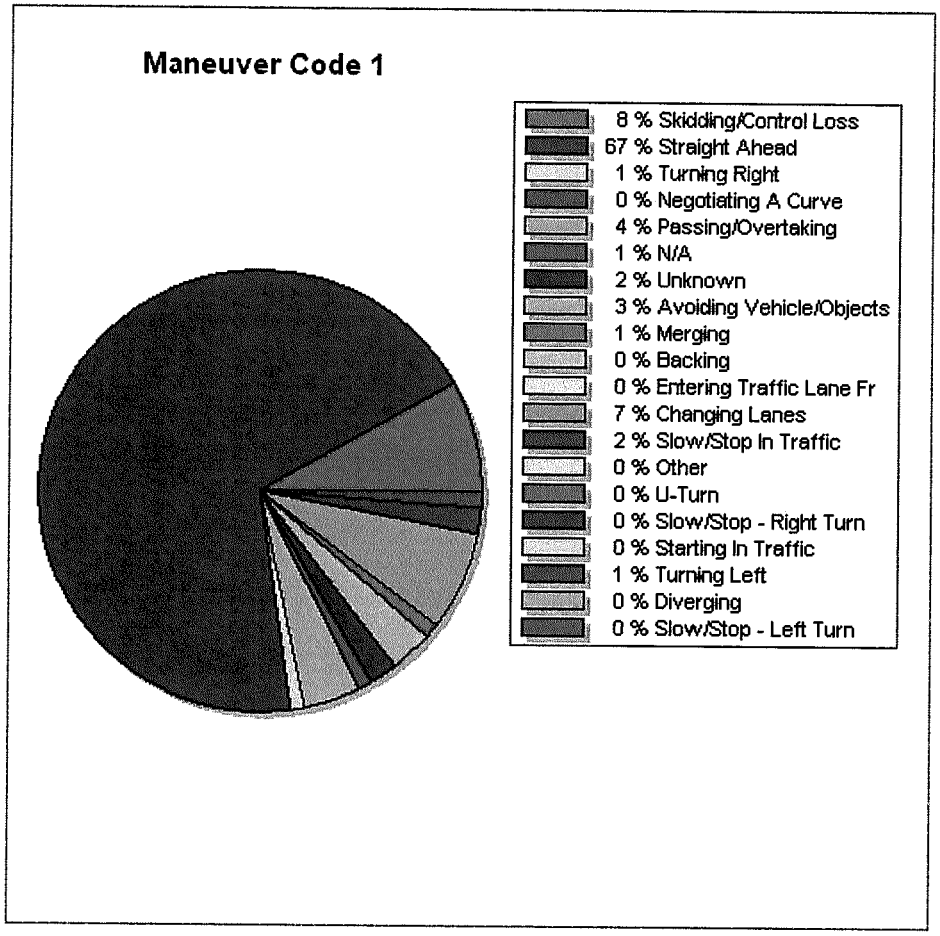

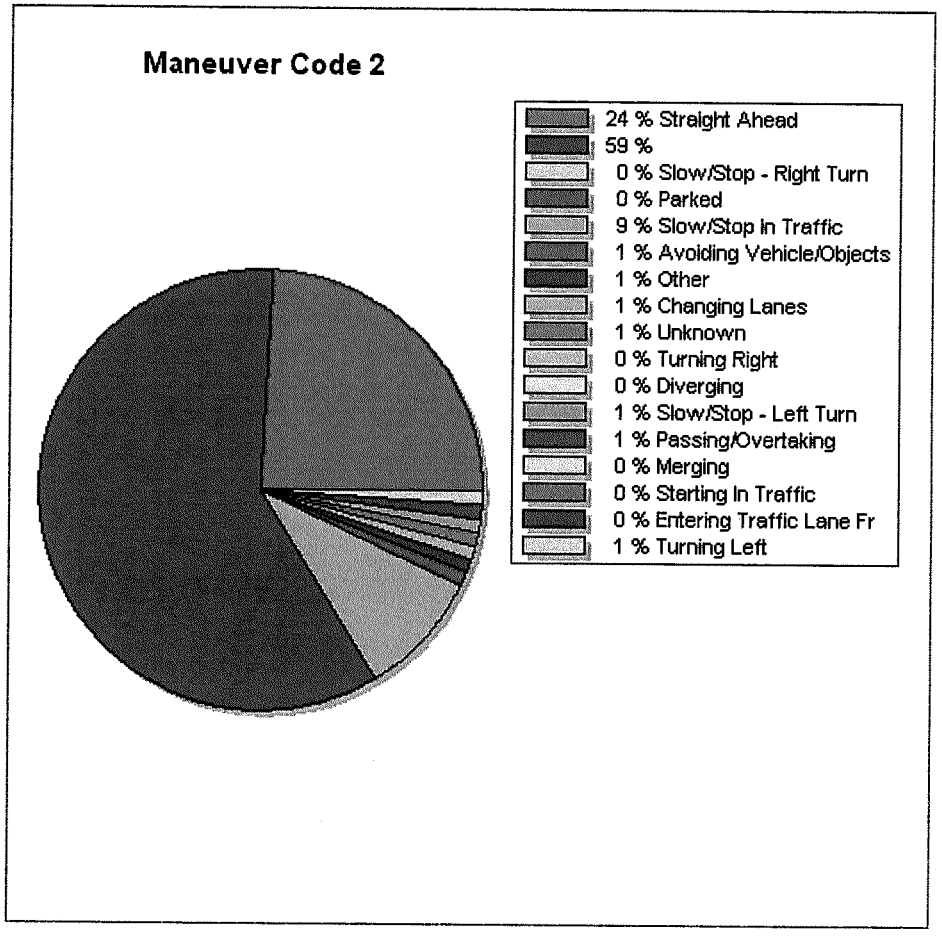

ILLINOIS DEPARTMENT OF TRANSPORTATION

GIS Crash Report Details: 2010-2015 Crashes

I-57 Herrin Rd to I-64

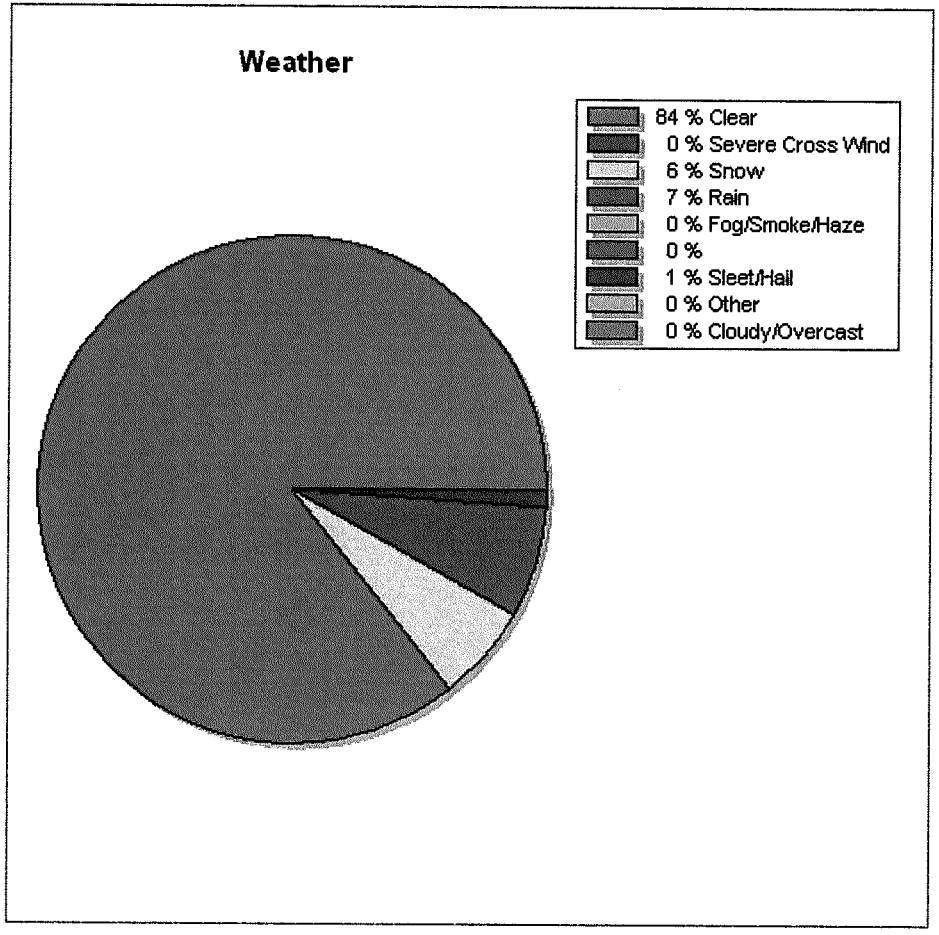

EXHIBIT 5

DISTRICT COORDINATION MEETING MINUTES

Illinois Department of Transportation

Memorandum

To:	File
From:	Charles Stein
Subject:	Coordination Meeting Minutes
Date:	August 20, 2013

FAI-57 (I-57)
SECTION I-57 ADD LANE-2
WILLIAMSON and FRANKLIN COUNTIES

The above noted project was discussed at the July 24, 2013 coordination meeting. An attendance roster is attached.

The project consists of the addition of a third lane in the northbound and southbound direction of I-57 from Stiritz Road (MP 61) to the Franklin/Jefferson county line (MP80). The additional lanes will be added in the existing median with an open ditch median or concrete barrier median being used depending on the existing median width. Also, the superstructures for bridges within the project limits will be replaced and widened to accommodate the additional lanes. A request for approval to process the project as a CE II was tentatively approved pending the environmental findings.

During the project discussion it was brought up that the county line cannot be used a logical termini. Therefore the project limits will be extended to I-64.

Chris Fraley stated that a field safety review will be required since the project is full federal oversight. A field safety review will be scheduled as soon as possible.

EXHIBIT 6

INTERSTATE SAFETY REVIEW MEETING MINUTES

Illinois Department of Transportation

Memorandum

To:	File
From:	Brandy Maes
Subject:	Interstate Safety Review
Date:	September 24, 2013

FAI 57 (I-57)
Contract No. not yet assigned
Section I-57 Add Lane-2
Job No. P-99-005-13
Williamson, Franklin and Jefferson County

An Interstate Safety Review was conducted on September 24, 2013 for the above noted project. The following were in attendance: Joe Zdankiewicz, Chris Fraley, Lance Kidd, Charles Stein and Brandy Maes.

The proposed project includes adding a lane in both the northbound and southbound directions from ½ north of Stiritz Road to the tri-level structures south of Mount Vernon in Jefferson County. Median ditches will be graded and median drainage structures widened or a closed median with concrete barrier will be used. Existing structures will be widened.

The following safety issues regarding this project were discussed:

- Structures will need to be replaced to accomadate additional lane
- Outside concrete shoulder with aggregate wedge will need to be removed and replaced
- A new wearing surface should be considered for the completed rubblized lanes
- Gaps in concrete median should occur at current median crossovers and impact attenuators placed according to policy
- Foundations of all signs, control boxes and lights will need to be inspected to insure proper heights. Any deficient foundations shall be corrected or protected with guardrail.
- Research into a deceleration lane at all median crossovers was recommended

EXHIBIT 7

ENVIRONMENTAL DOCUMENTATION

Illinois Department of Transportation

Memorandum

To:	Jeffrey Keirn	Attn: Julie Klamm
From:	John Baranzelli	By: Brad Koldehoff
Subject:	Cultural Resource Concurrence	
Date:	March 12, 2014	

Williamson, Franklin, and Jefferson Counties
FAI 57, I-57
Seq. #18286

The attached letter documents the concurrence of the State Historic Preservation Officer in the following determination by IDOT's professional cultural resources staff: "No Historic Properties Affected." This concurrence completes the necessary cultural resource coordination for the above referenced project.

Brad Koldehoff

Attachment

BK:km

Illinois Department of Transportation
2300 South Dirksen Parkway / Springfield, Illinois / 62764

Williamson, Franklin & Jefferson Counties **March 10, 2014**
FAI 57, I-57
West Frankfort to Bonnie
Add Lanes
IDOT Sequence #18286
ISAS Log #13165

Federal - Section 106 Project

NO HISTORIC PROPERTIES AFFECTED

Ms. Anne Haaker
Deputy State Historic Preservation Officer
Illinois Historic Preservation Agency
Springfield, Illinois 62701

Dear Ms. Haaker:

Enclosed are copies of the Phase I Survey Report completed by Illinois State Archaeological Survey personnel concerning historical and archaeological resources potentially impacted by the above referenced project. Survey of the 120-acre project area resulted in the identification of no archaeological sites. No architectural resources eligible for National Register consideration were identified by IDOT's cultural resources staff.

This add-lanes project is confined to existing IDOT ROW. Remnants of four known archaeological sites (11FK11, 11FK13, 11JN37, and 11JN38), identified during the original I-57 survey in the early 1960s, could not be located within IDOT ROW. These site areas were likely removed during I-57 construction.

In accordance with the established procedure for coordination of proposed IDOT projects, we request the concurrence of the State Historic Preservation Officer in our determination that no historic properties subject to protection under Section 106 of the National Historic Preservation Act of 1966, as amended, will be affected by the proposed project.

Very truly yours,

Brad H. Koldehoff, RPA
Cultural Resources Unit
Bureau of Design and Environment

CONCUR
By: Anne E. Haaker
Deputy State Historic Preservation Officer
Date: 3/11/14

Illinois Department of Transportation

Memorandum

To:	Jeffrey L. Keirn	Attn: Carrie L. Nelsen
From:	John D. Baranzelli	By: Thomas C. Brooks
Subject:	Natural Resources Review	Thomas C. Brooks
Date:	January 31, 2014	

I-57
T3S/R3E/S7
Seq. #18286
Williamson, Franklin, Jefferson Counties

The proposed project involves adding lanes in the median of I-57 from Stiritz Road just north of Johnston City to the merge with I-64 just south of Mt. Vernon. The project length is 33 miles.

There will be no new land acquisition. There will be in-stream work. Tree removal is undetermined at this time. Land cover in the vicinity of the proposed improvement is mowed and maintained interstate right of way.

Review for Illinois Endangered Species Protection and Illinois Natural Areas Preservation – Part 1075

The Illinois Natural Heritage Database contains no record of State-listed threatened or endangered species, Illinois Natural Area Inventory sites, dedicated Illinois Nature Preserves, or registered Land and Water Reserves in the vicinity of the project location. **Therefore, consultation under Part 1075 is terminated.**

This review for compliance with 17 Ill. Adm. Code Part 1075 is valid for two years unless new information becomes available that was not previously considered; the proposed improvement is modified; or additional species, essential habitat, or Natural Areas are identified in the vicinity. If the proposed improvement has not been implemented within two years of the date of this memorandum, or any of the above listed conditions develop, a new review will be necessary.

Review for Illinois Interagency Wetland Policy Act – Part 1090

The National Wetlands Inventory does not show wetlands in the median of the interstate. **Therefore, the wetland review under Part 1090 is terminated.**

Review for Endangered Species Act - Section 7

See the attached US Fish and Wildlife Service list of endangered, threatened, proposed and candidate species and proposed and designated critical habitat that may be present within the counties in which the proposed project is located. We cross-referenced the preferred habitat of each listed species with our knowledge of the project area and determined that listed species and critical habitat are not present.

Should the proposed improvement be modified or new information indicate listed or proposed species may be affected, consultation or additional coordination should be initiated.

Attachment—USFWS species county list

BT

PESA

Submittal Date: | **Sequence No:** 18286

District: 9 | **Requesting Agency:** DOH | **Project No:**

Contract #: | **Job No.:**

Counties: Williamson, Franklin, Jefferson

Route: FAI 57 | **Marked:** I-57

Street: | **Section:**

Municipality(ies): West Frankfort, Benton, Ina, Bonnie | **Project Length:** 53.108 **km** 33 **miles**

FromTo (At): I-57 from Stiritz Rd. north of Johnston City to south of Mt.Vernon where I-57 joins I-64

Quadrangle: Johnston City, West Frankfort, Rend Lake Dam, Ina, Mt. Vernon | **Township-Range-Section:** T. 8S,7S,6S,5S,4S,3S - R 2E,3E

Survey Target Date: 11/15/2014 | **Anticipated DA:** 12/30/2014 | **Cleared for DA:** 10/02/2014

Anticipated Letting Date: | **Cleared for Letting:** | ☐ **Target Memo** | **Antic. Process.** CE

☐ **Validation**

Sent for Survey	PESA Report Received	District Notified	Letter Report Received	District Notified	PESA Number	Risk Level	Survey Results to Fire Marshal	Survey Results to IEPA	PESA Response Date
12/04/2013	09/30/2014	10/02/2014			2878				

☐ **Waiver** | **PESA Number:** 2878 | **Waiver Request Approved:**

Comments:

EXHIBIT 8

DESIGN CRITERIA CHECKLIST

Illinois Department of Transportation

Level Two Design Criteria Checklist

Key Route:	FAI 57		
Marked Route/Road Name:	I-57		
State Job No.:	P-99-005-13	Contract No.:	N/A
Functional Classification:	Interstate	Highway Type:	6-Lane
County(ies):	Williamson, Franklin, and Jefferson	Project Length:	30 miles
City:	N/A	Section:	I-57 Add Lane-2
Project Location:	This project begins at station 58+00 (1/2 miles North of Stiritz Road) and ends at the I-64/I-57 Interchange.		

Project Scope of Work

a. Check the appropriate box. See Section 31-6 for definitions.

☐ New construction	☒ *Reconstruction	☐ *3R (non-freeway)	☐ *3R (freeway)
☐ 3P	☐ SMART	☐ HSIP	☐ Other

**Note: May include "Allowed to Remain in Place" criteria.*
This form is required for all new construction, reconstruction, and 3R projects.

b. Provide a brief project description:

Proposed work includes adding a lane in both the northbound and southbound directions. Median ditches will be graded and median drainage structures widened. Structures will be widened and superstructures replaced.

Design Criteria (Provide numerical values, where indicated.)	Does the proposed design meet the criteria?		
	Yes	No	N/A
1. Basic Design Controls (Chapter 31)			
a. Design speed: 70 mph mph (km/h)	☒	☐	☐
b. SSD application for vertical curves (downgrade adjusted SSD used)	☒	☐	☐
c. Truck SSD (level) (at specific sites)	☐	☐	☒
d. Level of service (mainline)	☐	☐	☒
2. Horizontal Alignment (mainline) (Chapter 32)			
a. Horizontal curvature (minimum radius for selected design speed) feet (meters)	☒	☐	☐
b. Superelevation rates (e_{max} = %)	☒	☐	☐
c. Superelevation transition lengths	☒	☐	☐
d. SSD application at horizontal curves (downgrade adjusted SSD used)	☐	☐	☒
e. Superelevation distribution between tangent and curve	☒	☐	☐
f. "Breakover" of outside shoulder on super-elevated curves 8%	☒	☐	☐
g. Relative longitudinal slope of shoulder to edge of traveled way on high side of S.E. curve adjacent to bridge with S.E.	☐	☐	☒
h. Superelevation development at reverse curves	☐	☐	☒

Design Criteria (Provide numerical values, where indicated.)	Does the proposed design meet the criteria?		
	Yes	No	N/A
i. Is superelevation transition length located off of bridges and bridge approach pavements?	☒	☐	☐
j. Horizontal sight distance on inside of horizontal curves (Level SSD for passenger cars)	☒	☐	☐
3. Vertical Alignment (mainline) (Chapter 33)			
a. Maximum grades (in percent):	☒	☐	☐
b. Stopping sight distance at crest vertical curves (level SSD for passenger cars)	☒	☐	☐
c. Stopping sight distance at sag vertical curves (level SSD for passenger cars)	☒	☐	☐
d. Minimum grades (in percent) considering drainage	☐	☐	☒
e. Critical length of grade	☐	☐	☒
f. Truck-climbing lanes/critical grade analysis	☐	☐	☒
g. Design criteria for truck-climbing lanes (e.g., lane width and shoulder width)	☐	☐	☒
h. Minimum length of vertical curves for selected design speed	☐	☐	☒
i. Maximum length of vertical curves (drainage of curbed facilities and bridges)	☐	☐	☒
4. Cross Section Elements (mainline) (Chapter 34)			
a. Lane widths: 12' feet (meters)	☒	☐	☐

Design Criteria (Provide numerical values, where indicated.)	Does the proposed design meet the criteria?		
	Yes	No	N/A
b. Traveled way widening: 24	☒	☐	☐
c. Cross-slopes on through lanes (in percent)			
Inside lane: Lane 1 1.5%	☒	☐	☐
Outside lanes: Lane 2 1.5%	☒	☐	☐
Lane 3 2.0%	☒	☐	☐
Lane 4	☐	☐	☒
d. Shoulder widths: 12' feet (meters)(inside)	☒	☐	☐
12' feet (meters)(outside)	☒	☐	☐
e. Design of parking lanes:			
• Cross-slope %	☐	☐	☒
• Width feet (meters)	☐	☐	☒
f. Type of curb and gutter used on median:	☐	☐	☒
g. Drainage of raised curb medians:			
• Direction of flow of median surface or pavement	☐	☐	☒
• Direction of cross-slope on gutter %	☐	☐	☒
h. Type of curb and gutter used along outside edges of pavement	☐	☐	☒
i. TWLTL width:			
• Flush type feet (meters)	☐	☐	☒
• Traversable type feet (meters)	☐	☐	☒
j. Median widths:			
• Urban feet (meters)	☐	☐	☒
• Suburban feet (meters)	☐	☐	☒
• Rural 50' - 80' feet (meters)	☒	☐	☐
k. Shoulder cross slopes 4.0 %	☒	☐	☐
l. Fill slopes: : (V:H)	☐	☐	☒

Design Criteria (Provide numerical values, where indicated.)	Does the proposed design meet the criteria?		
	Yes	No	N/A
m. Outside roadway ditch:			
• Slopes ___:___ • Depth ___	☐	☐	☒
• Widths ___	☐	☐	☐
Median ditch:			
• Slopes 10:1 to 4:1 • Depth ___:___	☒	☐	☐
• Width 2'	☒	☐	☐
n. Cross-section transitions into bridges/ underpasses	☒	☐	☐
o. Use of mountable curbs (V > 45 mph (70 km/h))	☐	☐	☒
p. Cross-section transition details (e.g., four-lane to two-lane)	☐	☐	☒
5. Intersections (Chapter 36)			
a. Accommodation of design vehicle (identify vehicle) ___	☐	☐	☒
b. Level of service:			
• Through lanes ___	☐	☐	☒
• Turn lanes ___	☐	☐	☒
c. Skew angle	☐	☐	☒
d. Profiles	☐	☐	☒
e. Volume guidelines for turn-lanes:			
• Right-turns	☐	☐	☒
• Left turns	☐	☐	☒
f. Design of right-turn lanes	☐	☐	☒
Design of left-turn lanes	☐	☐	☒

Design Criteria (Provide numerical values, where indicated.)		Does the proposed design meet the criteria? Yes	No	N/A
g. Turn-lane tapers	Approach taper	☐	☐	☒
	Departure taper	☐	☐	☒
	Bay taper	☐	☐	☒
h. Turning roadway widths		☐	☐	☒
i. Turn-lane lengths	Deceleration (rural)	☐	☐	☒
	Storage (urban)	☐	☐	☒
j. Intersection sight distance: List criteria and type: _____ _____		☐	☐	☒
k. Median opening length: _____ feet (meters)		☐	☐	☒
l. Minimum corner island size: _____ sq. ft (sq. m)		☐	☐	☒
m. Does right-turn radius accommodate design vehicle without encroachment?		☐	☐	☒
n. Driveway widths feet (meters)		☐	☐	☒
o. Type of traffic control: • Two-way stop		☐	☐	☒
• All-way stop		☐	☐	☒
• Traffic signals		☐	☐	☒
p. Is maximum grade exceeded on any approach?		☐	☐	☒
q. Max "e" (in percent) for intersections on curve		☐	☐	☒
6. Interchanges (Chapter 37)				
a. Exit terminal	Standard type	☐	☐	☒
	Design speed of first curve	☐	☐	☒
	Are any exit terminals located on mainline horizontal curve?	☐	☐	☒

Design Criteria (Provide numerical values, where indicated.)		Does the proposed design meet the criteria?		
		Yes	No	N/A
b. Entrance terminal	Standard type	☐	☐	☒
	Length of tangent after the entering curve	☐	☐	☒
	Design speed of entering curve	☐	☐	☒
c. Design speed of ramp proper: _____ mph (km/h)		☐	☐	☒
d. Design speed of crossroad: _____ mph (km/h)		☐	☐	☒
e. Maximum ramp grades: • Exit ramp _____ % • Entrance ramp _____ %		☐ ☐	☐ ☐	☒ ☒
f. Ramp pavement width feet (meters)		☐	☐	☒
g. Ramp shoulder widths • Left _____ feet (meters) • Right _____ feet (meters)		☐ ☐	☐ ☐	☒ ☒
h. Horizontal ramp curvature in conjunction with selected design speeds		☐	☐	☒
i. Superelevation development on ramps	Superelevation rate	☐	☐	☒
	Transition length	☐	☐	☒
	Distribution between tangent & curve	☐	☐	☒
j. Vertical curvature compliance with selected design speed on ramp		☐	☐	☒
k. Length of access control at crossroad		☐	☐	☒
l. Type of traffic control at crossroad: • Stop signs • Traffic signals • Free flow		☐ ☐ ☐	☐ ☐ ☐	☒ ☒ ☒
m. Is length of crest vertical curve used on crossroad ≥ that required by the selected design speed of crossroad?		☐	☐	☒

Design Criteria (Provide numerical values, where indicated.)			Does the proposed design meet the criteria?		
			Yes	No	N/A
n. Are crossroad approach grades through ramp/ crossroad intersections ≤ 2%?			☐	☐	☒
o. Are ramp/crossroad intersections located on a tangent section of crossroad alignment?			☐	☐	☒
p. Is decision sight distance available in advance of exit gore?			☐	☐	☒
q. Is clear recovery area available beyond gore nose?			☐	☐	☒
r. Level of service: • Exit terminal _____ • Entrance terminal _____ • Ramp proper _____ • Weaving area _____ • Ramp/crossroad intersection			☐ ☐ ☐ ☐ ☐	☐ ☐ ☐ ☐ ☐	☒ ☒ ☒ ☒ ☒
s. Freeway lane drops	Location	Upgrade	☐	☐	☒
		Downgrade	☐	☐	☒
		Inside lane	☐	☐	☒
		Outside lane	☐	☐	☒
		At exit terminal	☐	☐	☒
		Beyond exit terminal	☐	☐	☒
		Taper length	☐	☐	☒
7. Roadside Safety (Chapter 38)					
a. Horizontal clearances: • Clear zones on tangent sections 30 • Clear zones on outside of horizontal curves			☒ ☒	☐ ☐	☐ ☐
b. Barrier warrants			☒	☐	☐
c. Barrier length of need			☒	☐	☐

Design Criteria (Provide numerical values, where indicated.)	Does the proposed design meet the criteria?		
	Yes	No	N/A
d. Deceleration criteria for impact attenuators	☒	☐	☐
8. Structure Planning/Geometrics (Chapter 39)			
a. Clear roadway bridge widths: 58 feet (meters)	☒	☐	☐
b. Structural capacity of bridges:	☒	☐	☐
c. Vertical clearances 16 feet (meters)	☒	☐	☐

Note: Use multiple forms for each roadway within the project.

Prepared by: _____ Date: _____

Designer (IDOT or Consultant) Signature