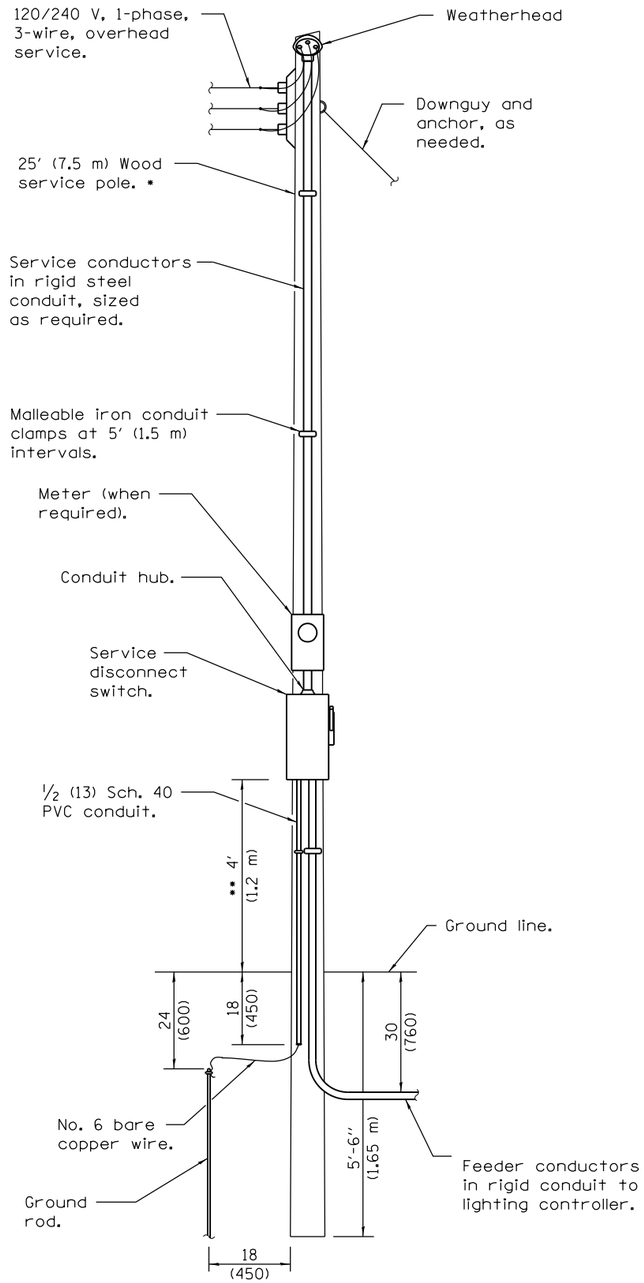

ELECTRIC SERVICE INSTALLATION

• Size larger as needed.
•• Or as directed by Utility Company.

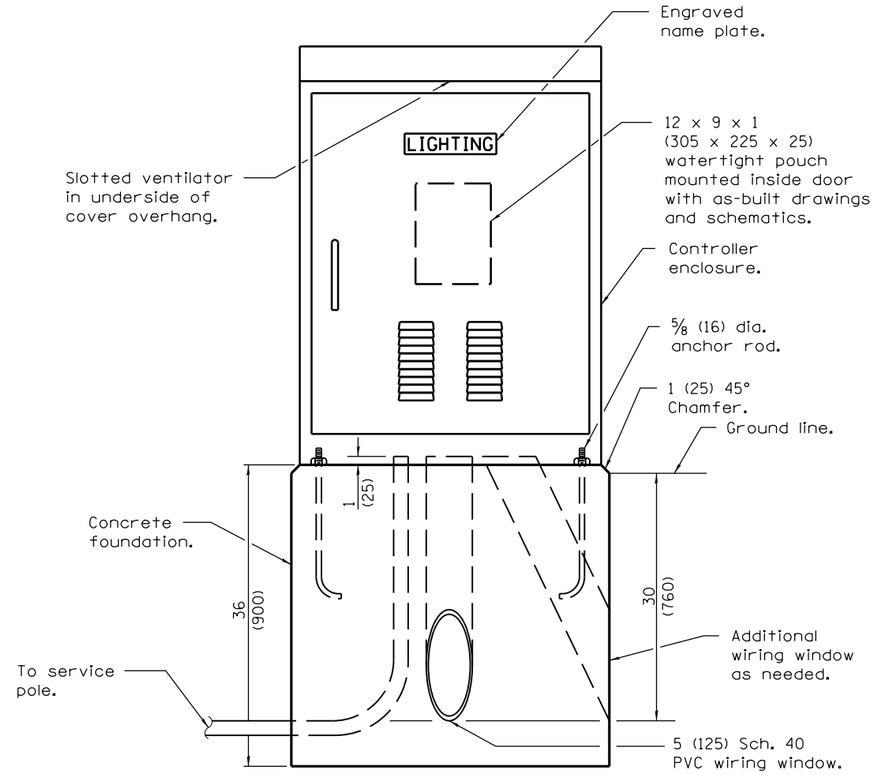

LIGHTING CONTROLLER

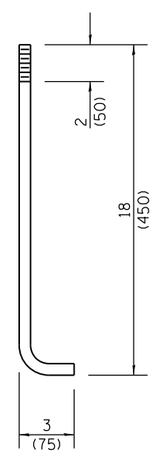

ANCHOR ROD DETAIL

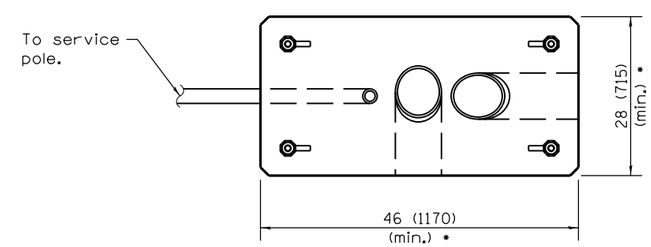

FOUNDATION (PLAN)

(Work pad not shown.)

• Size larger as needed.

All dimensions are in inches (millimeters) unless otherwise shown.

Illinois Department of Transportation

PASSED January 1, 2015
ENGINEER OF PRELIMINARY ENGINEERING

APPROVED January 1, 2015
ENGINEER OF DESIGN AND ENVIRONMENT

ISSUED 1-1-12

DATE	REVISIONS
1-1-15	Added note (16).
1-1-12	New Standard.

NAVIGATION OBSTRUCTION LIGHTING CONTROLLER, 240V

(Sheet 1 of 2)

STANDARD 826001–01

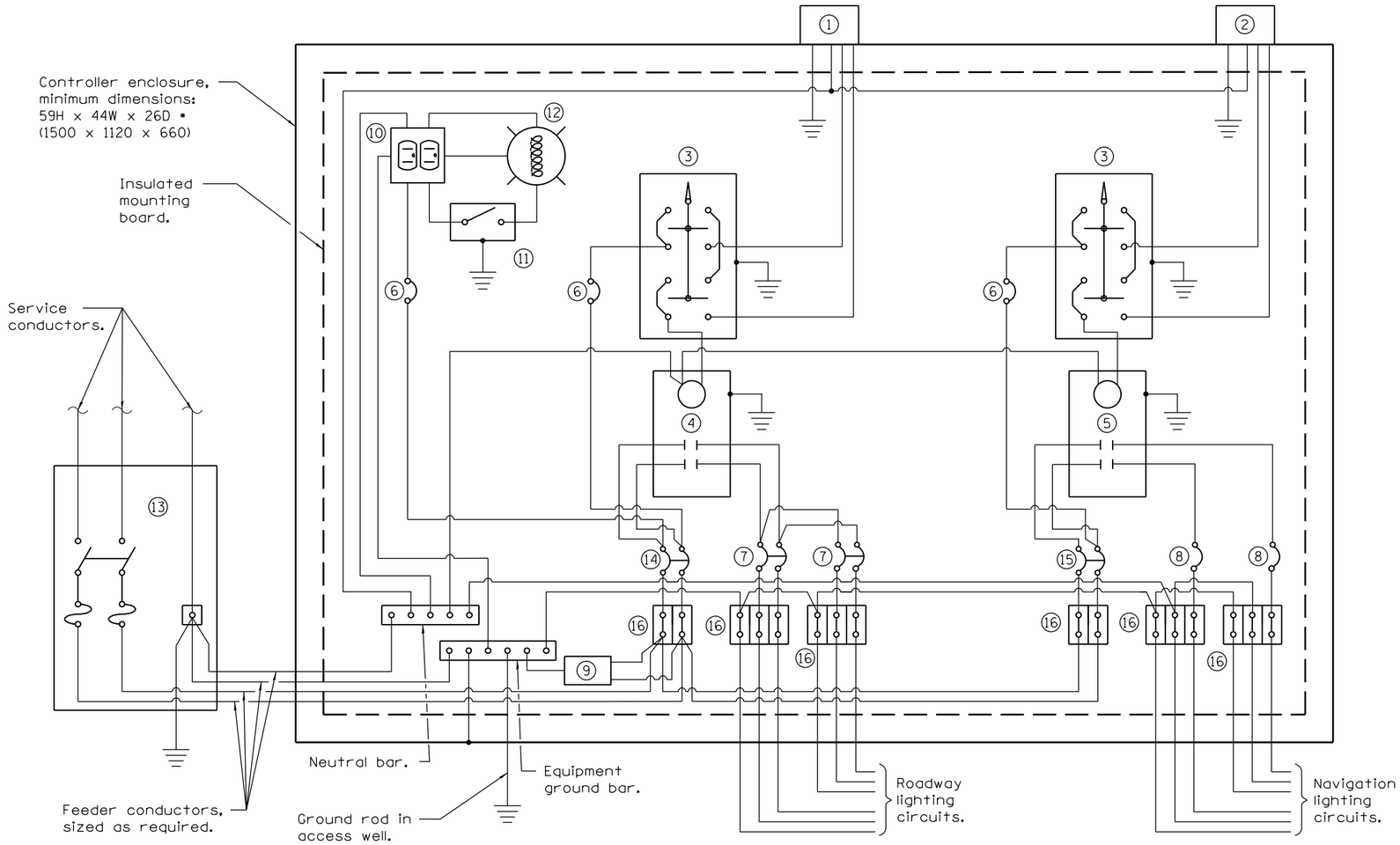

1. Photocell with integral surge arrester for roadway lighting.
2. Photocell with integral surge arrester for navigation lighting.
3. HAND-OFF-AUTO selector switch.
4. 100 amp•, electrically held contactor.
5. 60 amp•, electrically held contactor.
6. 15 amp, 1-pole circuit breaker.
7. 20 amp•, 2-pole circuit breaker (two spares required but not shown).
8. 20 amp•, single-pole circuit breaker (two shown, quantity as required).
9. Surge arrester.
10. GFCI duplex receptacle.
11. Single-pole, single-throw switch.
12. Incandescent luminaire, enclosed and gasketted with 100 watt lamp.
13. Service disconnect switch - 2-pole, 3-wire, 100 amp•, fused at 100 amp•, solid neutral in NEMA 4X enclosure having lockable external handle.
14. 60 amp•, 2-pole circuit breaker.
15. 30 amp•, 2-pole circuit breaker.
16. Terminal block sized for conductors as shown on plans.

• Size larger as needed.

CONTROL SCHEMATIC

Illinois Department of Transportation

PASSED January 1, 2015
ENGINEER OF PRELIMINARY ENGINEERING
APPROVED January 1, 2015
ENGINEER OF DESIGN AND ENVIRONMENT

ISSUED 1-1-12

NAVIGATION OBSTRUCTION LIGHTING CONTROLLER, 240V

(Sheet 2 of 2)

STANDARD 826001–01