CELL / MODEL NAME	DESCRIPTION	DATE
A-1	Pile stub abutment no skew	2/17/2017
A-1-D	Pile stub abutment details	2/17/2017
A-1-DSD	Pile stub abutment details with drilled shafts	2/17/2017
A-1-L (greater than 30 degree skew)	Pile stub abutment ahead left (> 30 degree skew)	2/17/2017
A-1-L (less than 30 degree skew)	Pile stub abutment ahead left (< 30 degree skew)	2/17/2017
A-1-R (greater than 30 degree skew)	Pile stub abutment ahead right (> 30 degree skew)	2/17/2017
A-1-R (less than 30 degree skew)	Pile stub abutment ahead right (< 30 degree skew)	2/17/2017

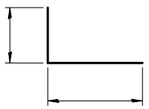

BAR h2(E)

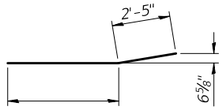

BAR h4(E)

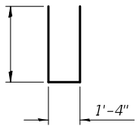

BAR n(E)

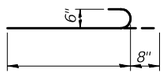

BAR n1(E)

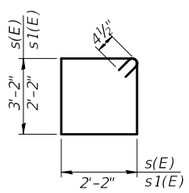

BARS s(E) & s1(E)

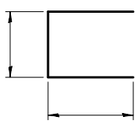

BAR u(E)

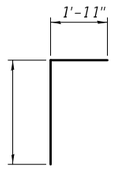

BAR v(E)

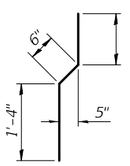

BAR v1(E)

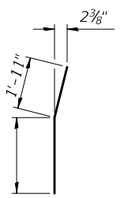

BAR v3(E)

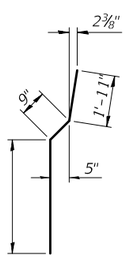

BAR v4(E)

PILE DATA

Type:
Nominal Required Bearing:
Factored Resistance Available:
Est. Length:
No. Production Piles:
No. Test Piles:

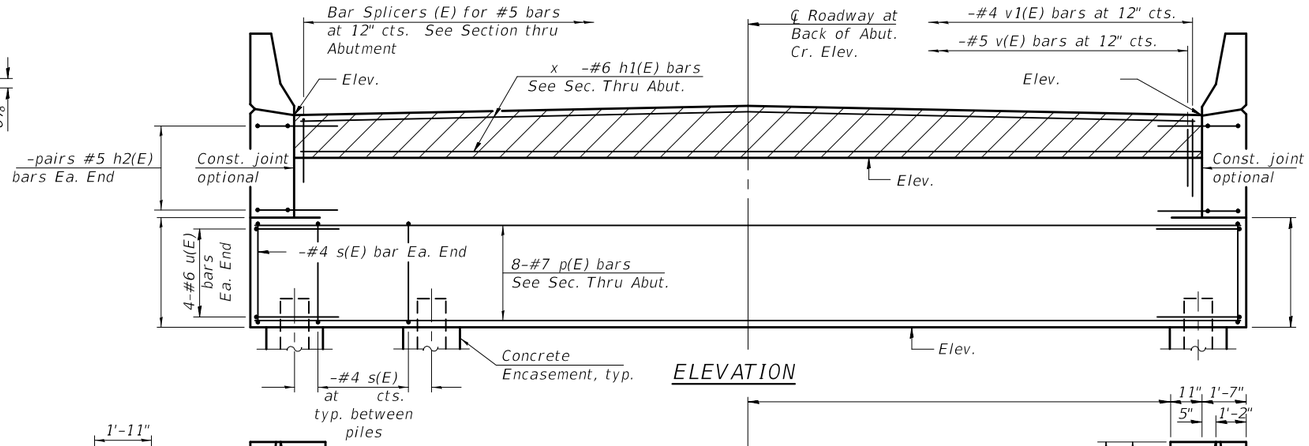

ELEVATION

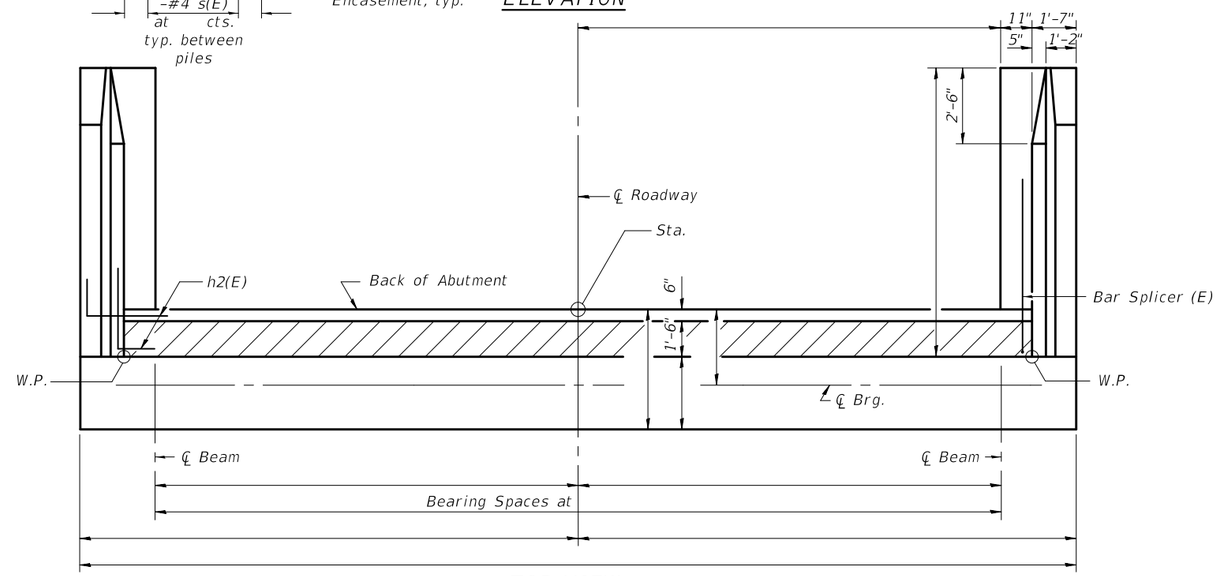

TOP VIEW

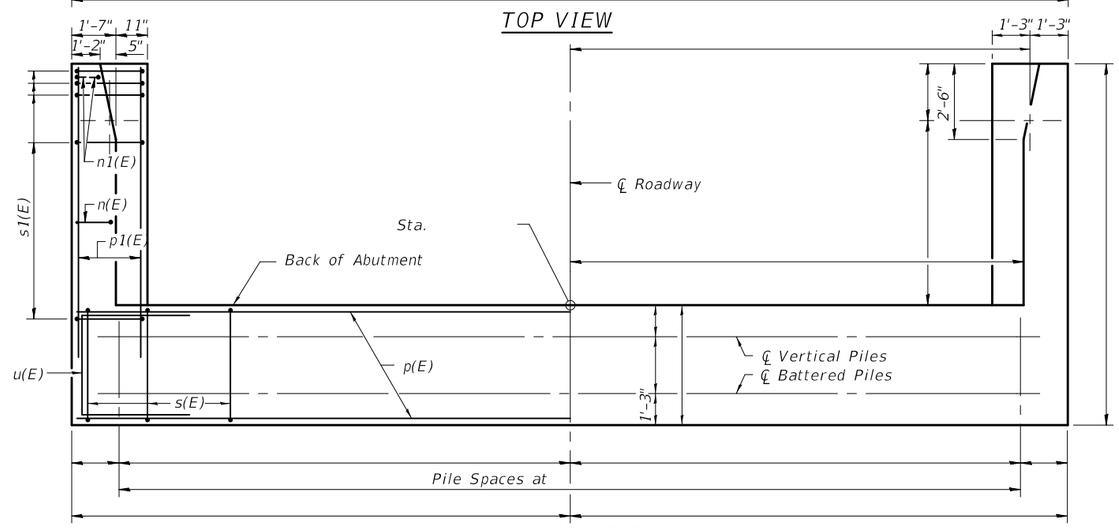

PLAN-PILE CAP

ABUTMENT BILL OF MATERIAL

Bar	No.	Size	Length	Shape
h(E)		#5		
h1(E)		#6		
h2(E)		#5		
h3(E)		#4		
h4(E)		#4		
n(E)		#6		
n1(E)		#6		
p(E)		#7		
p1(E)		#7		
s(E)		#4		
s1(E)		#4		
u(E)		#6		
v(E)		#5		
v1(E)		#4		
v2(E)		#6		
v3(E)		#6		
v4(E)		#6		
Structure Excavation		Cu. Yd.		
Concrete Structures		Cu. Yd.		
Reinforcement Bars, Epoxy Coated		Pound		
Furnishing - Piles,		Foot		
Driving Piles		Foot		
Test Pile,		Each		
Concrete Encasement		Cu. Yd.		
Concrete Sealer		Sq. Ft.		

For details of Bar Splicers, see sheet -of -.
For details of piles and Concrete Encasement, see sheet - of -.

A-1 2-17-2017

FILE NAME =	USER NAME =	DESIGNED -	REVISED -	STATE OF ILLINOIS DEPARTMENT OF TRANSPORTATION	ABUTMENTS STRUCTURE NO.	F.A. RTE.	SECTION	COUNTY	TOTAL SHEETS	SHEET NO.
		CHECKED -	REVISED -							
	PLOT SCALE =	DRAWN -	REVISED -			CONTRACT NO.				
	PLOT DATE =	CHECKED -	REVISED -			ILLINOIS	FED. AID PROJECT			

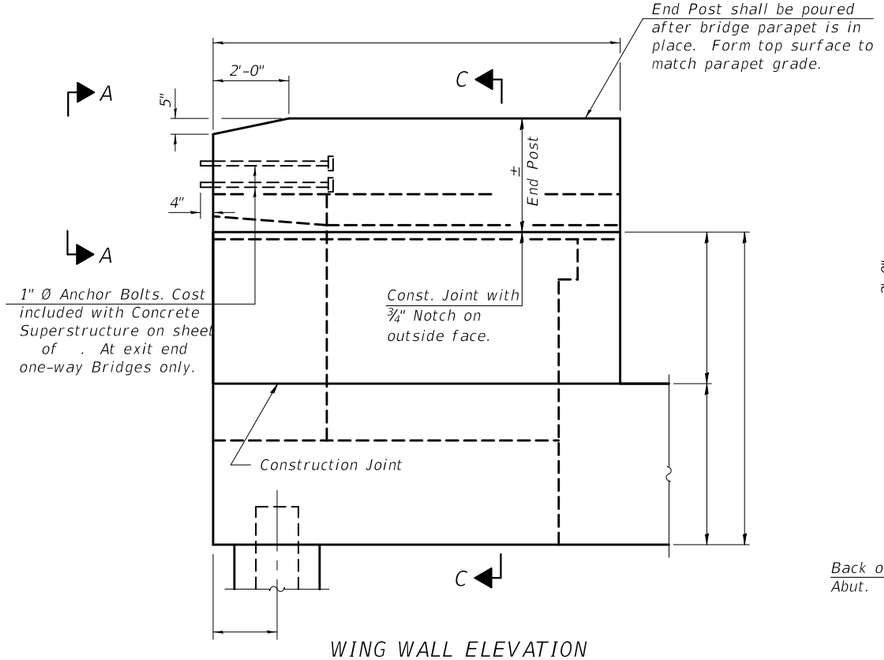

WING WALL ELEVATION
Showing Dimensions

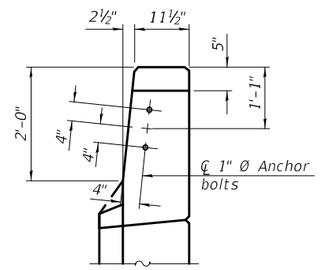

VIEW A-A

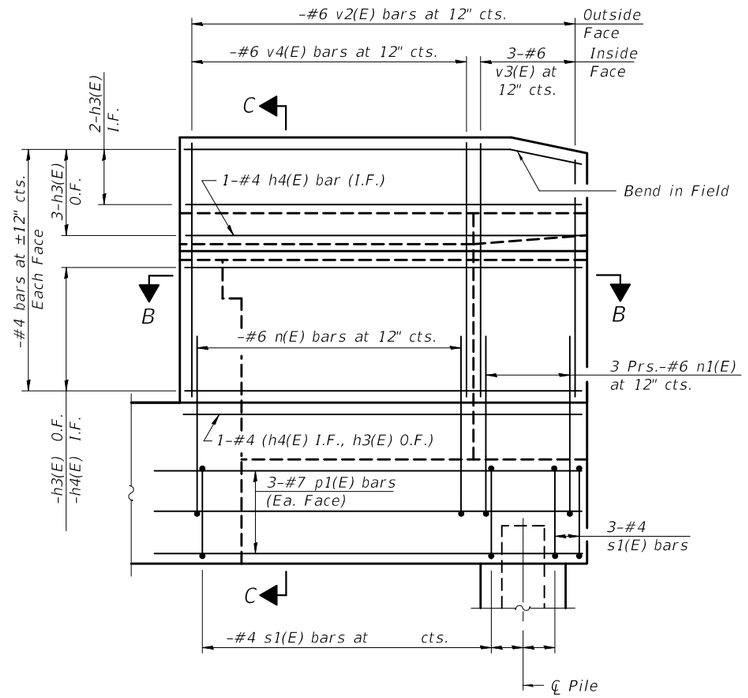

WING WALL ELEVATION
Showing Reinforcement

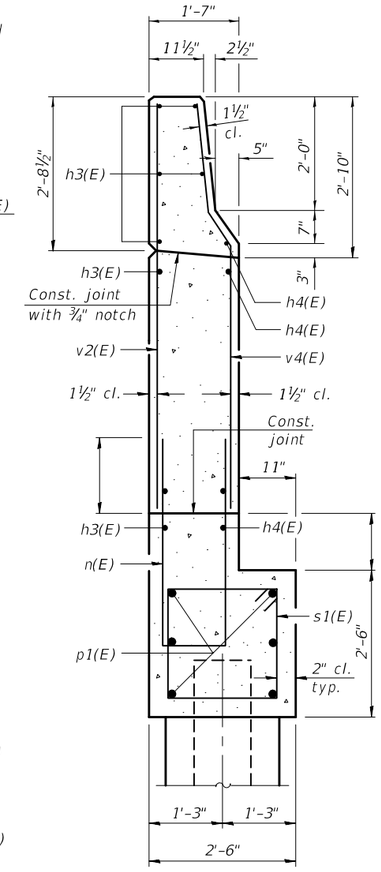

SECTION C-C

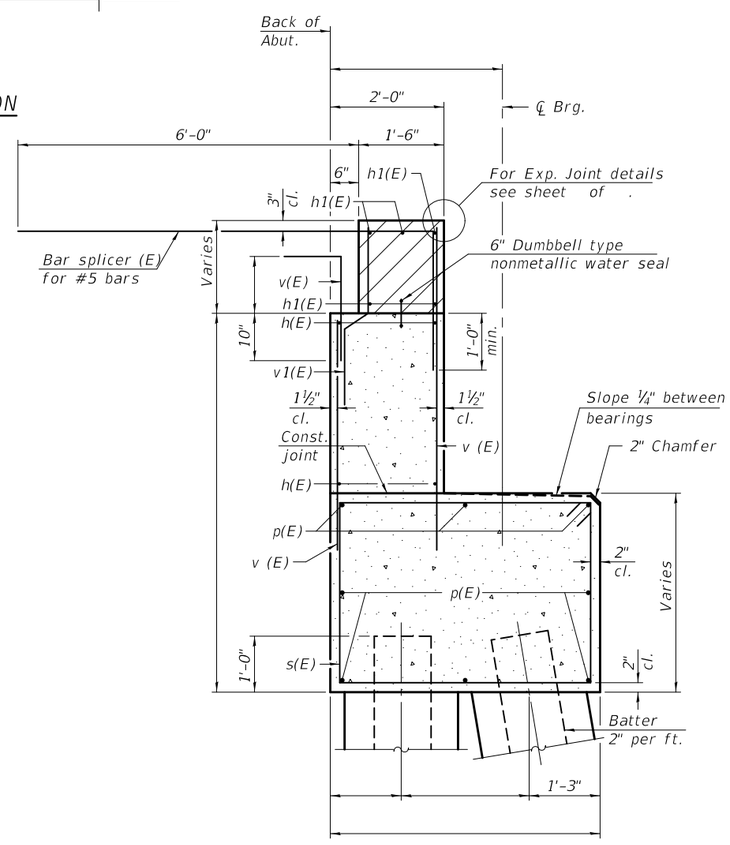

SEC. THRU ABUT.

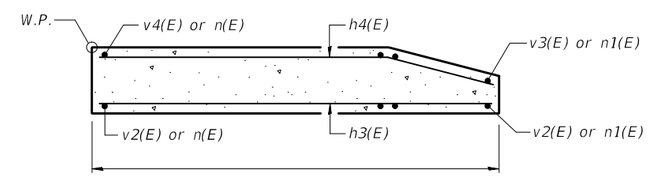

SECTION B-B

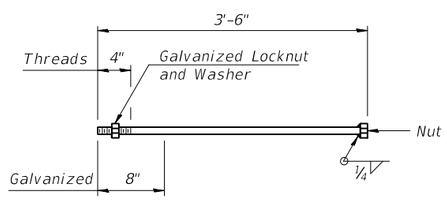

1" Ø ANCHOR BOLT

Notes:
Hatched area to be poured after superstructure false work has been removed. Quantity of concrete included with Concrete Superstructure.
Space reinforcement in cap to miss anchor bolts.
Pour steps monolithically with cap.
Quantity of concrete in end post included with Concrete Superstructure on sheet - of -.
For Concrete Encasement details, see sheet - of -.

A-1-D 2-17-2017

FILE NAME =	USER NAME =	DESIGNED -	REVISED -	STATE OF ILLINOIS DEPARTMENT OF TRANSPORTATION	ABUTMENTS STRUCTURE NO.	F.A. RTE.	SECTION	COUNTY	TOTAL SHEETS / SHEET NO.
		CHECKED -	REVISED -						
	PLOT SCALE =	DRAWN -	REVISED -					CONTRACT NO.	
	PLOT DATE =	CHECKED -	REVISED -					ILLINOIS FED. AID PROJECT	

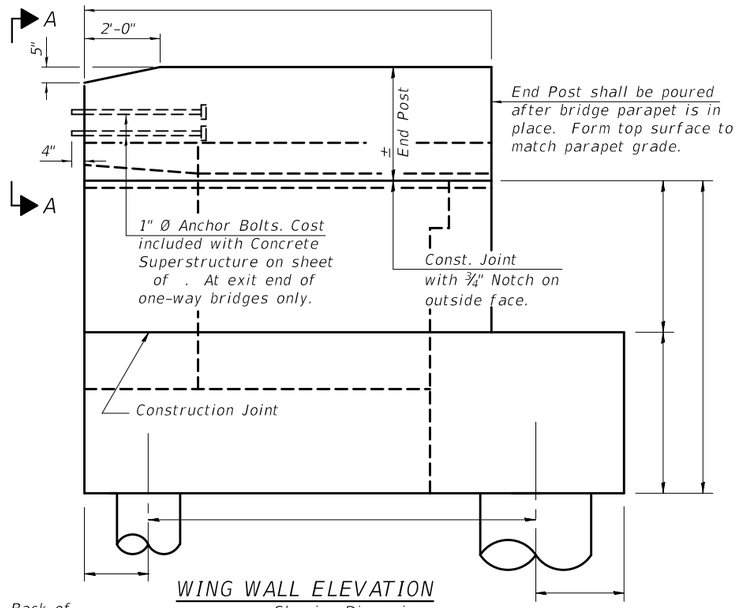

WING WALL ELEVATION
Showing Dimensions

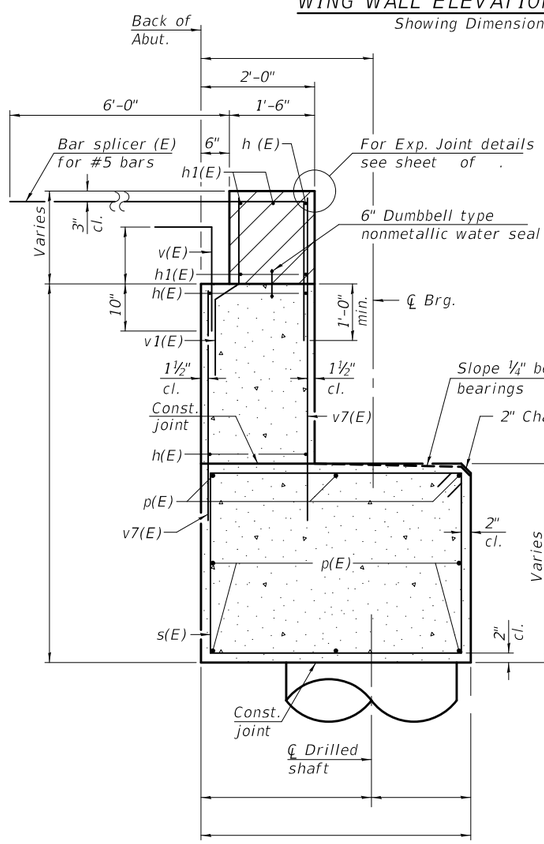

SECTION THRU ABUT.

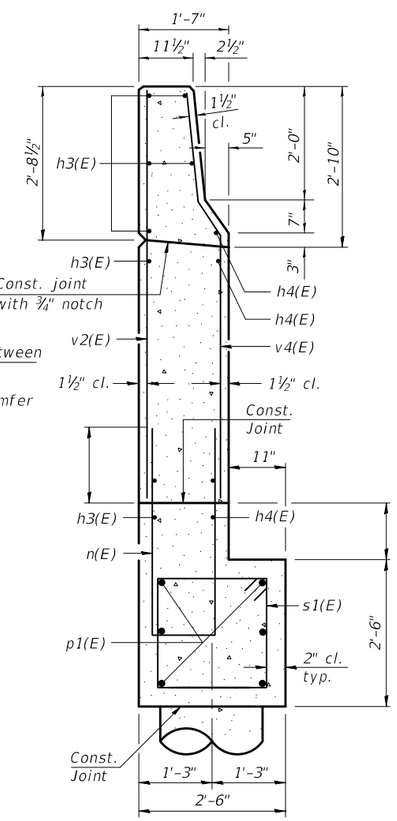

SECTION B-B

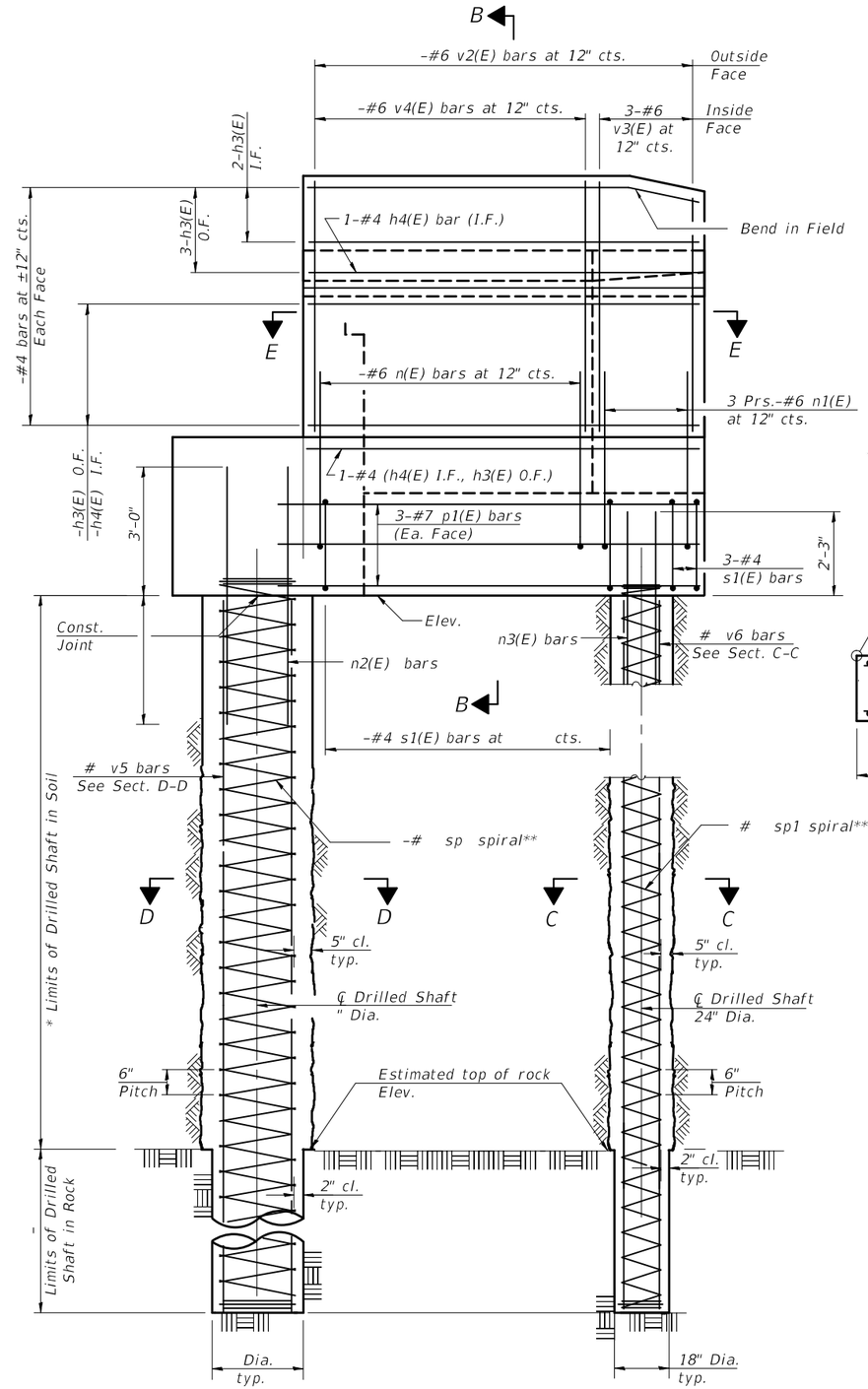

WING WALL & DRILLED SHAFT ELEVATION
Showing Reinforcement

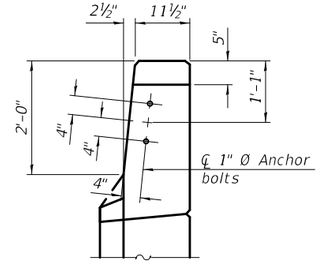

VIEW A-A

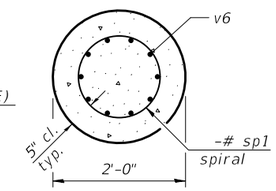

SECTION C-C

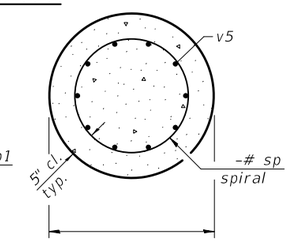

SECTION D-D

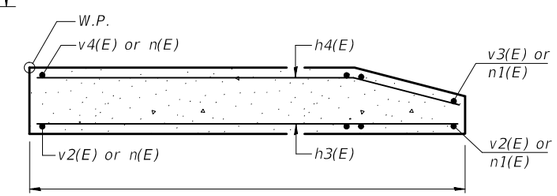

SECTION E-E

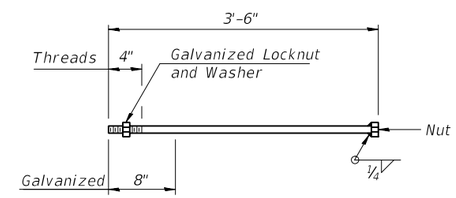

1" Ø ANCHOR BOLT

Notes:
Quantity of concrete in end post included with Concrete Superstructure on sheet of .
Min. lap for spirals = .
Pour steps monolithically with cap.

* The quantities and detailing are based on the estimated elevations shown on the plans. The actual elevations may differ at each shaft and corresponding adjustments shall be made to the drilled shaft and reinforcment quantities and payment limits.

** Provide 1½ extra turns top and bottom of each drilled shaft. Extend spiral 2" into abutment or wingwall cap. Provide min. 4-#4 spacers or equivalent.

A-1-DSD 2-17-2017

FILE NAME =	USER NAME =	DESIGNED -	REVISED -	STATE OF ILLINOIS DEPARTMENT OF TRANSPORTATION	ABUTMENTS STRUCTURE NO.	F.A. RTE.	SECTION	COUNTY	TOTAL SHEETS	SHEET NO.
		CHECKED -	REVISED -							
	PLOT SCALE =	DRAWN -	REVISED -			CONTRACT NO.				
	PLOT DATE =	CHECKED -	REVISED -			ILLINOIS FED. AID PROJECT				

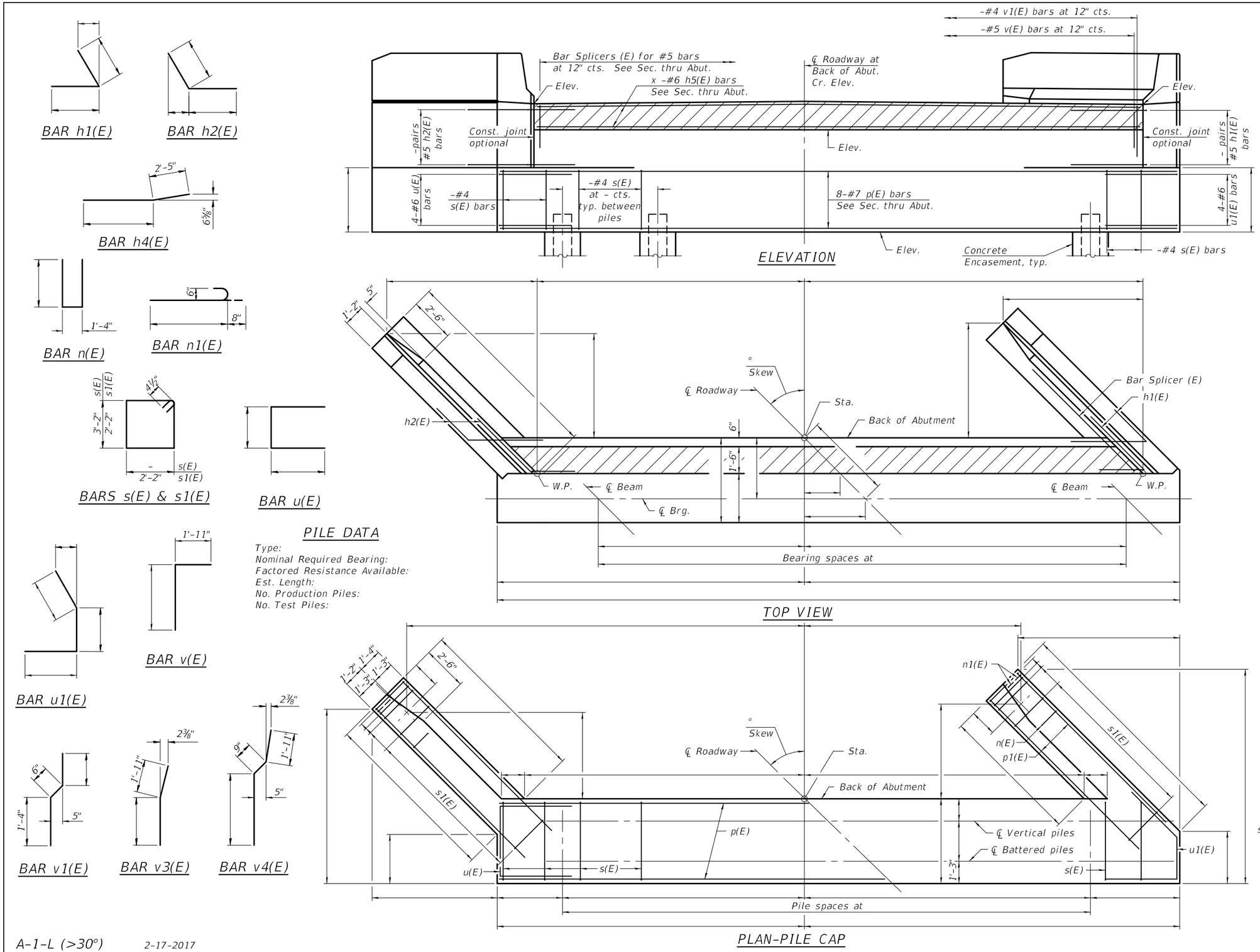

ABUTMENT BILL OF MATERIAL

Bar	No.	Size	Length	Shape
h(E)		#5		
h1(E)		#5		
h2(E)		#5		
h3(E)		#4		
h4(E)		#4		
h5(E)		#6		
n(E)		#6		
n1(E)		#6		
p(E)		#7		
p1(E)		#7		
s(E)		#4		
s1(E)		#4		
u(E)		#6		
u1(E)		#6		
v(E)		#4		
v1(E)		#4		
v2(E)		#6		
v3(E)		#6		
v4(E)		#6		
Structure Excavation			Cu. Yd.	
Concrete Structures			Cu. Yd.	
Reinforcement Bars, Epoxy Coated			Pound	
Furnishing - Piles,			Foot	
Driving Piles			Foot	
Test Pile,			Each	
Concrete Encasement			Cu. Yd.	
Concrete Sealer			Sq. Ft.	

For details of Bar Splicers, see sheet -of -.
For details of piles and Concrete Encasement, see sheet - of -.

A-1-L (>30°) 2-17-2017

FILE NAME =	USER NAME =	DESIGNED -	REVISED -
		CHECKED -	REVISED -
	PLOT SCALE =	DRAWN -	REVISED -
	PLOT DATE =	CHECKED -	REVISED -

STATE OF ILLINOIS
DEPARTMENT OF TRANSPORTATION

ABUTMENTS
STRUCTURE NO.

F.A. RTE.	SECTION	COUNTY	TOTAL SHEETS	SHEET NO.

CONTRACT NO.

ILLINOIS FED. AID PROJECT

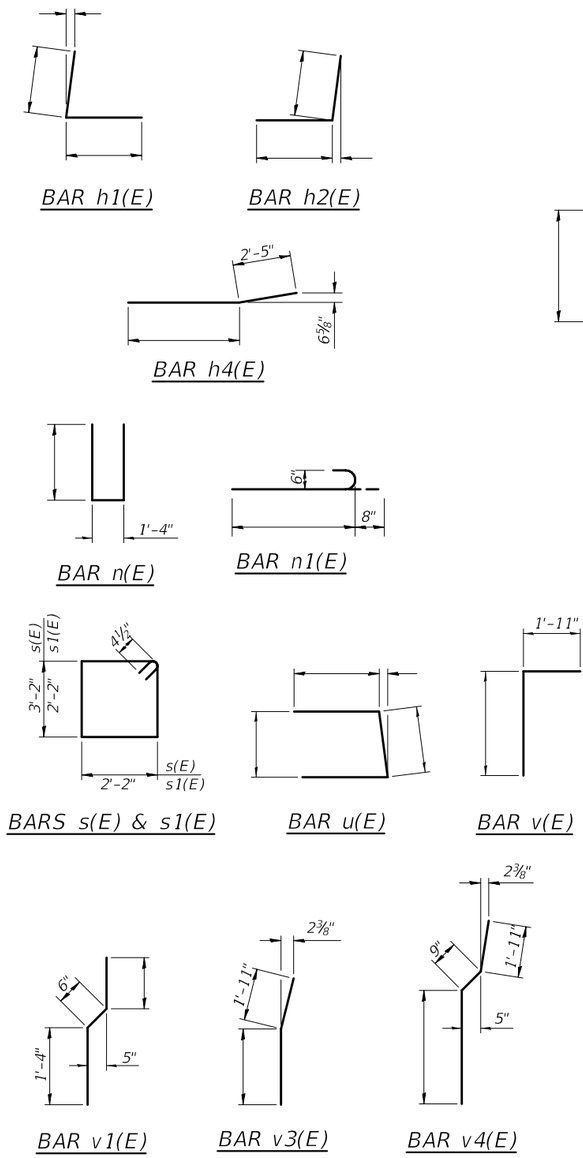

PILE DATA

Type:
Nominal Required Bearing:
Factored Resistance Available:
Est. Length:
No. Production Piles:
No. Test Piles:

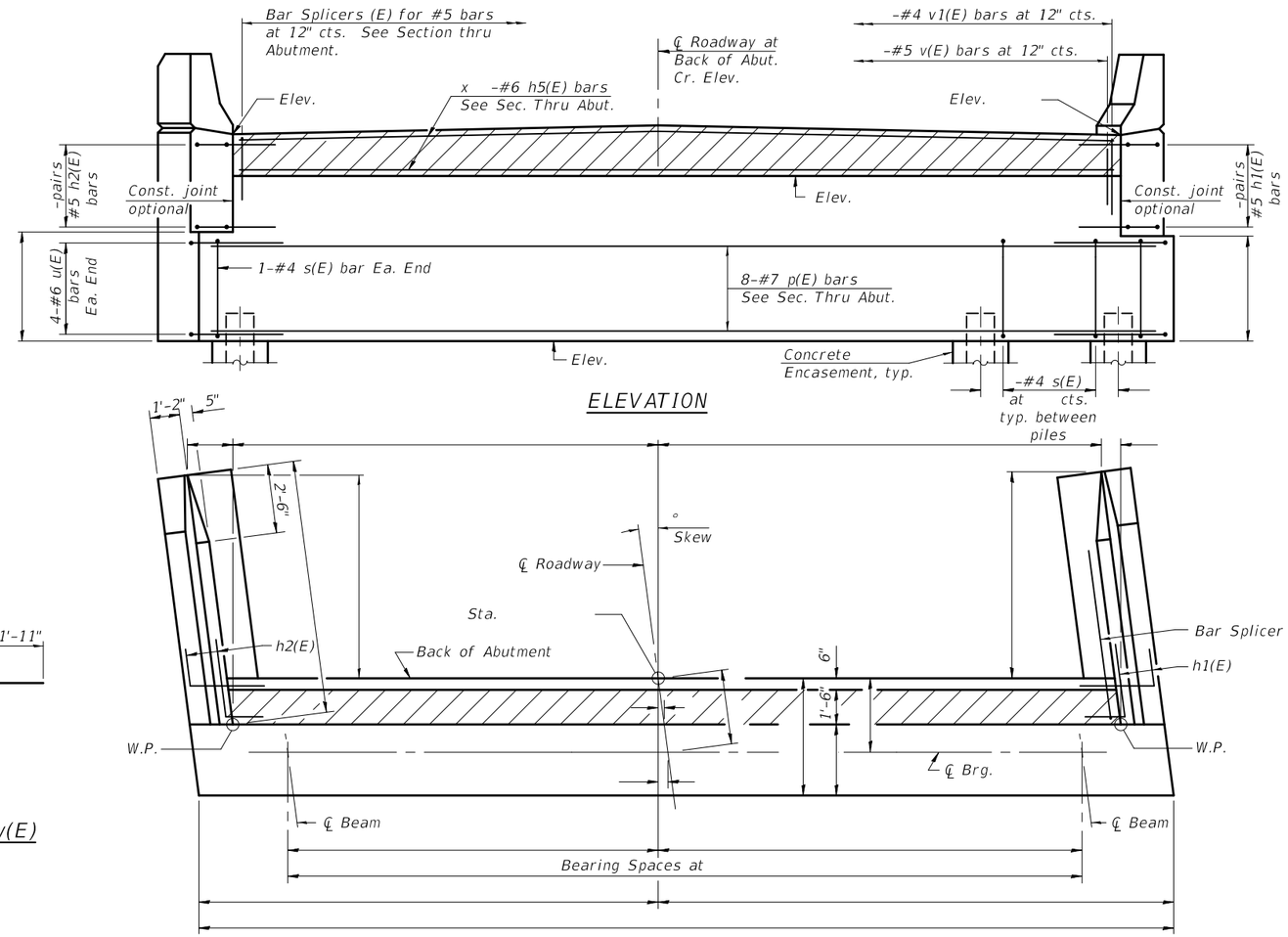

ELEVATION

TOP VIEW

PLAN-PILE CAP

ABUTMENT BILL OF MATERIAL

Bar	No.	Size	Length	Shape
h(E)		#5		
h1(E)		#5		
h2(E)		#5		
h3(E)		#4		
h4(E)		#4		
h5(E)		#6		
n(E)		#6		
n1(E)		#6		
p(E)		#7		
p1(E)		#7		
s(E)		#4		
s1(E)		#4		
u(E)		#6		
v(E)		#5		
v1(E)		#4		
v2(E)		#6		
v3(E)		#6		
v4(E)		#6		
Structure Excavation			Cu. Yd.	
Concrete Structures			Cu. Yd.	
Reinforcement Bars, Epoxy Coated			Pound	
Furnishing - Piles,			Foot	
Driving Piles			Foot	
Test Pile,			Each	
Concrete Encasement			Cu. Yd.	
Concrete Sealer			Sq. Ft.	

For details of Bar Splicers, see sheet - of -.
For details of piles and Concrete Encasement, see sheet - of -.

A-1-L (<30°) 2-17-2017

FILE NAME =	USER NAME =	DESIGNED -	REVISED -	STATE OF ILLINOIS DEPARTMENT OF TRANSPORTATION	ABUTMENTS STRUCTURE NO.	F.A. RTE.	SECTION	COUNTY	TOTAL SHEETS / SHEET NO.
		CHECKED -	REVISED -						
	PLOT SCALE =	DRAWN -	REVISED -					CONTRACT NO.	
	PLOT DATE =	CHECKED -	REVISED -				ILLINOIS	FED. AID PROJECT	

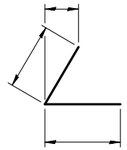

BAR h1(E)

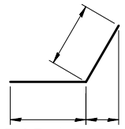

BAR h2(E)

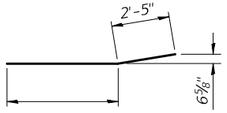

BAR h4(E)

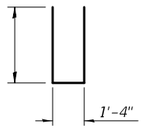

BAR n(E)

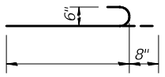

BAR n1(E)

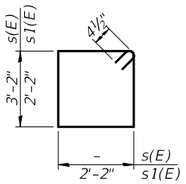

BARS s(E) & s1(E)

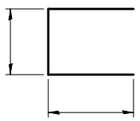

BAR u(E)

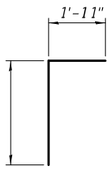

BAR v(E)

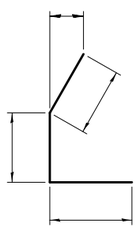

BAR u1(E)

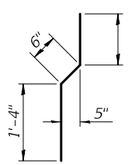

BAR v1(E)

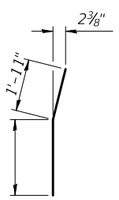

BAR v3(E)

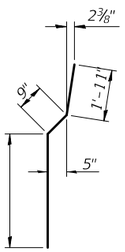

BAR v4(E)

PILE DATA

Type:
Nominal Required Bearing:
Factored Resistance Available:
Est. Length:
No. Production Piles:
No. Test Piles:

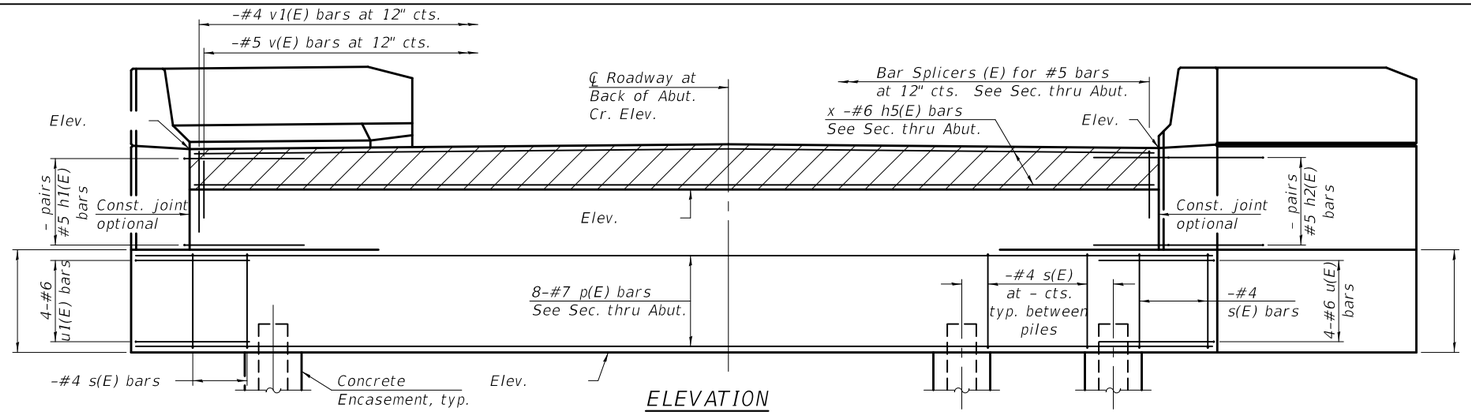

ELEVATION

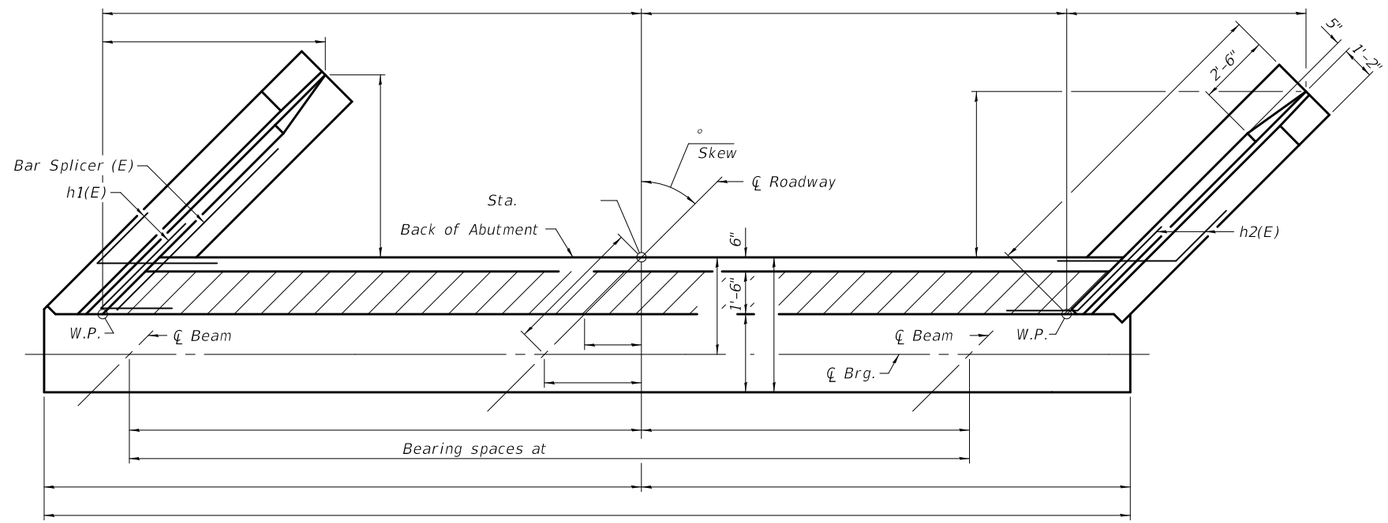

TOP VIEW

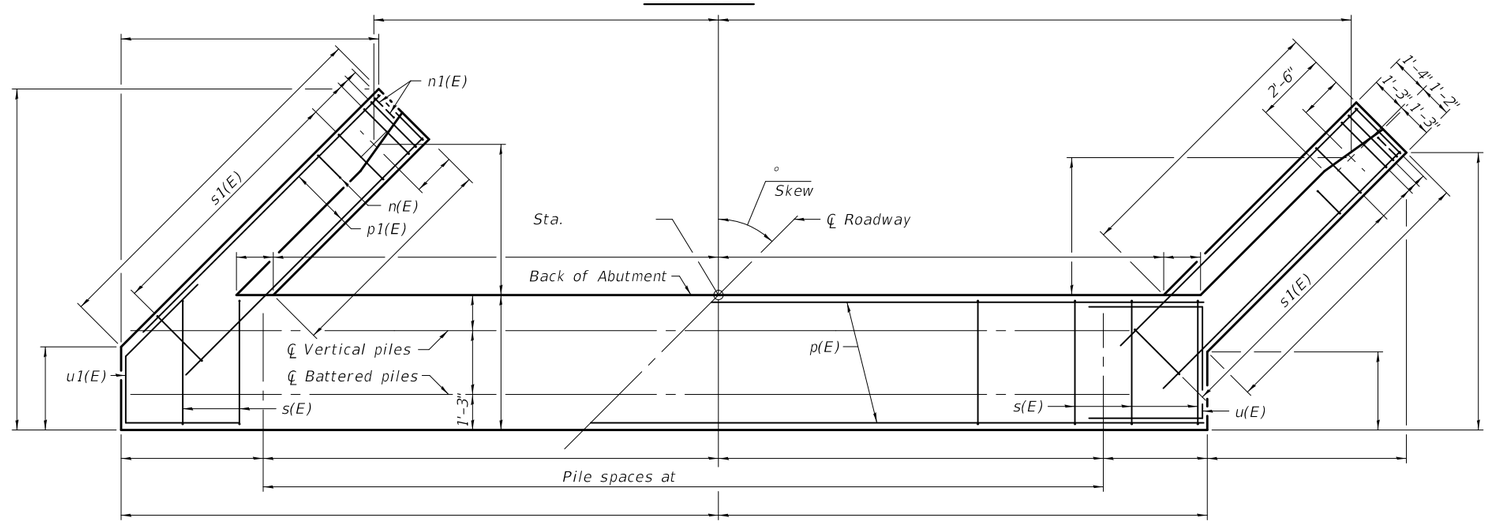

PLAN-PILE CAP

ABUTMENT BILL OF MATERIAL

Bar	No.	Size	Length	Shape
h(E)		#5		
h1(E)		#5		
h2(E)		#5		
h3(E)		#4		
h4(E)		#4		
h5(E)		#6		
n(E)		#6		
n1(E)		#6		
p(E)		#7		
p1(E)		#7		
s(E)		#4		
s1(E)		#4		
u(E)		#6		
u1(E)		#6		
v(E)		#5		
v1(E)		#4		
v2(E)		#6		
v3(E)		#6		
v4(E)		#6		
Structure Excavation			Cu. Yd.	
Concrete Structures			Cu. Yd.	
Reinforcement Bars, Epoxy Coated			Pound	
Furnishing - Piles,			Foot	
Driving Piles			Foot	
Test Pile,			Each	
Concrete Encasement			Cu. Yd.	
Concrete Sealer			Sq. Ft.	

For details of Bar Splicers, see sheet - of -.
For details of piles and Concrete Encasement, see sheet - of -.

A-1-R (>30°) 2-17-2017

FILE NAME =	USER NAME =	DESIGNED -	REVISED -
		CHECKED -	REVISED -
	PLOT SCALE =	DRAWN -	REVISED -
	PLOT DATE =	CHECKED -	REVISED -

STATE OF ILLINOIS
DEPARTMENT OF TRANSPORTATION

ABUTMENTS
STRUCTURE NO.

F.A. RTE.	SECTION	COUNTY	TOTAL SHEETS	SHEET NO.

CONTRACT NO.
ILLINOIS FED. AID PROJECT

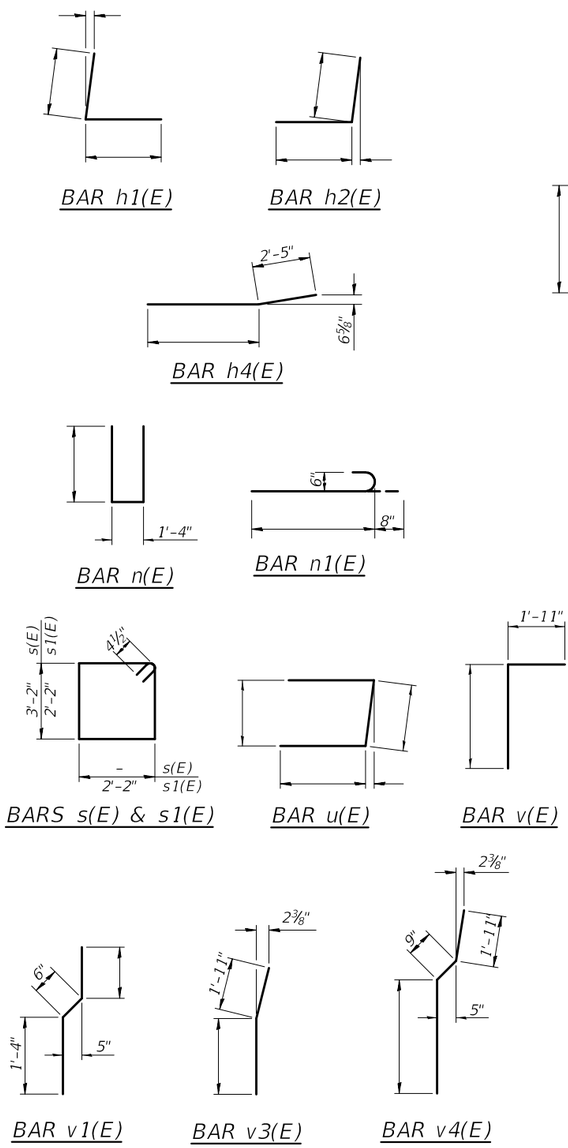

PILE DATA

Type:
Nominal Required Bearing:
Factored Resistance Available:
Est. Length:
No. Production Piles:
No. Test Piles:

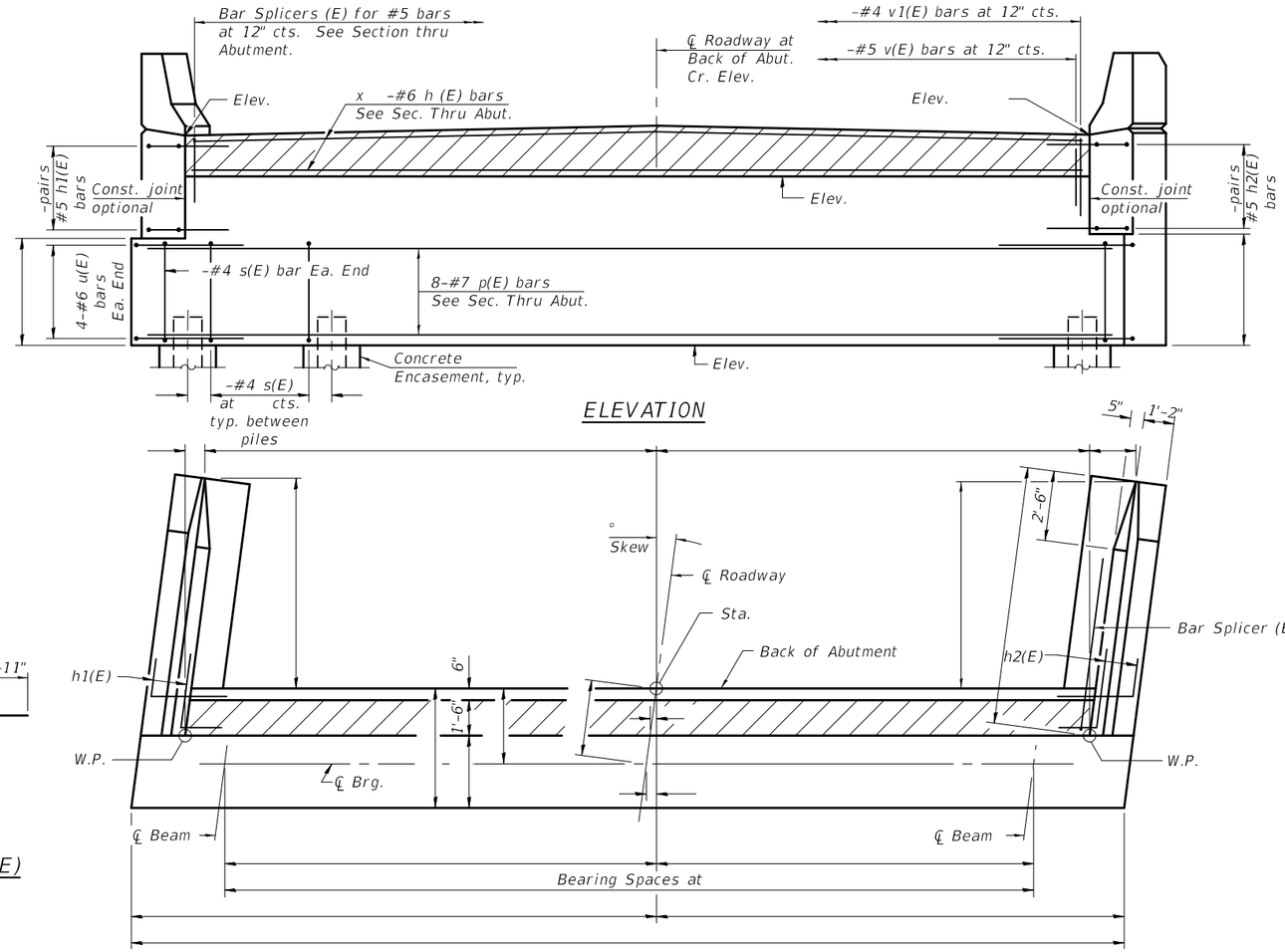

ELEVATION

TOP VIEW

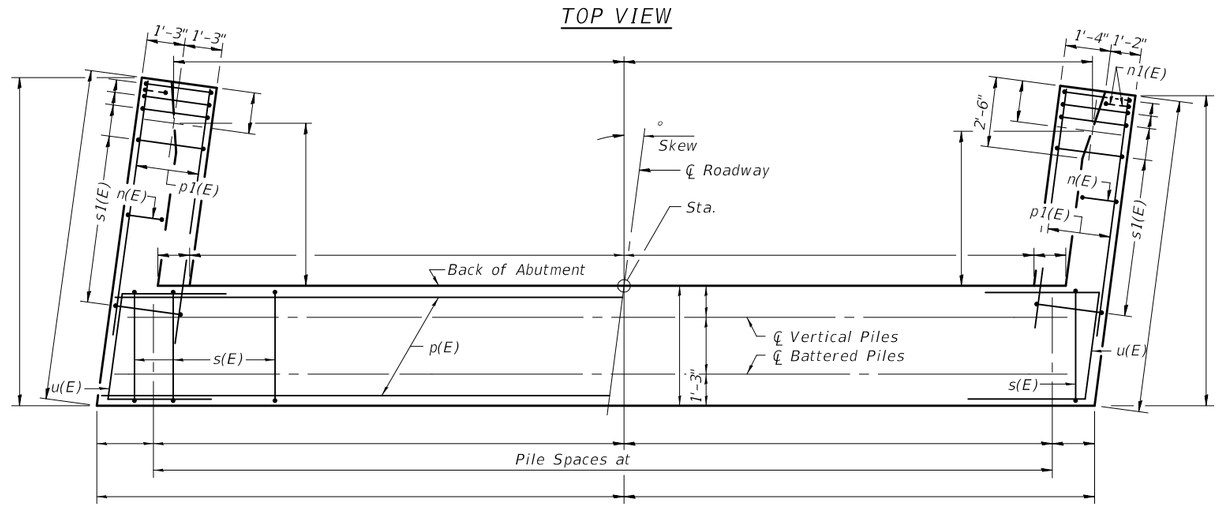

PLAN-PILE CAP

ABUTMENT BILL OF MATERIAL

Bar	No.	Size	Length	Shape
h(E)		#5		
h1(E)		#5		
h2(E)		#5		
h3(E)		#4		
h4(E)		#4		
h5(E)		#6		
n(E)		#6		
n1(E)		#6		
p(E)		#7		
p1(E)		#7		
s(E)		#4		
s1(E)		#4		
u(E)		#6		
v(E)		#5		
v1(E)		#4		
v2(E)		#6		
v3(E)		#6		
v4(E)		#6		
Structure Excavation			Cu. Yd.	
Concrete Structures			Cu. Yd.	
Reinforcement Bars, Epoxy Coated			Pound	
Furnishing - Piles,			Foot	
Driving Piles			Foot	
Test Pile,			Each	
Concrete Encasement			Cu. Yd.	
Concrete Sealer			Sq. Ft.	

For details of Bar Splicers, see sheet -of -.
For details of piles and Concrete Encasement, see sheet - of -.

A-1-R (<30°) 2-17-2017

FILE NAME =	USER NAME =	DESIGNED -	REVISED -
		CHECKED -	REVISED -
	PLOT SCALE =	DRAWN -	REVISED -
	PLOT DATE =	CHECKED -	REVISED -

STATE OF ILLINOIS
DEPARTMENT OF TRANSPORTATION

ABUTMENTS
STRUCTURE NO.

F.A. RTE.	SECTION	COUNTY	TOTAL SHEETS	SHEET NO.

CONTRACT NO.
ILLINOIS FED. AID PROJECT