Illinois Department of Transportation

To:	John Fortmann	Attn: District One
From:	John D. Baranzelli	
Subject:	Pavement Design	
Date:	December 4, 2015	

FAU Route 2857 (Wood Street)
(145, 146, 146S-)WRS&B-1
Cook County
At Thornton Road

The project, submitted to BDE by email memo dated December 02, 2015, will reconstruct the existing roadway to a five-lane section from US 6 to 142nd Street and a three-lane section from 142nd Street to 138th Street. The life cycle cost favor a rigid pavement design by more than 10%, and the project is not subject to the alternate bid process. The approved pavement design is as follows:

Wood Street (Pavement Reconstruction)

9 inches of Jointed PCC Pavement with Tied PCC Curb & Gutter
12 inches of Aggregate Subgrade Improvement

Thornton Road (Pavement Reconstruction)

8 inches of Jointed PCC Pavement with Tied PCC Curb & Gutter
12 inches of Aggregate Subgrade Improvement

If you have any questions, please contact Paul Niedernhofer at (217) 524-1651.

Illinois Department of Transportation

Memorandum

To: John D. Baranzelli Attn: Paul Niedernhofer

From: Jose A. Dominguez By: Mel Mangoba/Ojas Patel

Subject: Pavement Analysis* Date: December 1, 2015

*Route: Wood Street
Limits: Little Cal R. to US 6
Section: (145,146,146S-)WRS&B-1
County: Cook

Contract No.: 60Y72
Job No.: P-91-161-10
Current target: 06CY16

We have completed the pavement analysis for the above captioned location. Review by the Central Office is required since the total pavement area for reconstruction exceeds 4,750 Square Yards. The following is the scope of the project:

Reconstruction of Wood Street to provide a five-lane section from US 6 to 142nd Street and a three-lane section from 142nd Street to 138th Street.

A 20-year pavement analysis was performed on the above segments. We recommend a mechanistic-rigid pavement design based on the life cycle cost analysis which favors PCC pavement by 12.6% for Wood Street and by 12.4% for Thornton Road. Our recommendation is as follows:

Wood Street
Reconstruction
PCC Curb and Gutter (Tied)
9" PCC Pavement (Jointed)[1]
12" Aggregate Subgrade Improvement[3]

Thornton Road[4]
Reconstruction
PCC Curb and Gutter (Tied.)
8" PCC Pavement (Jointed)[2]
12" Aggregate Subgrade Improvement[3]

[1]Designer Note 1: Use pay item **42000301, PORTLAND CEMENT CONCRETE PAVEMENT 9" (JOINTED),** paid for in square yards. Transverse contraction joints should be reduced to a maximum of 14 foot spacing for 9" PCC pavement.

[2]Designer Note 2: Use pay item **42000301, PORTLAND CEMENT CONCRETE PAVEMENT 8" (JOINTED),** paid for in square yards. Transverse contraction joints should be reduced to a maximum of 12 foot spacing for 8" PCC pavement.

[3]Designer Note 3: Use pay item **30300112, AGGREGATE SUBGRADE IMPROVEMENT, 12"** paid for in square yards.

[4]Designer Note 4: The west leg of Thornton Road is subject to local jurisdictional approval and concurrence.

If you have any questions or need additional information, please contact Ojas Patel, Pavement Engineer, at (847) 705-4550.

By: José A. Dominguez
Jose A. Dominguez, P.E.
Project Support Engineer

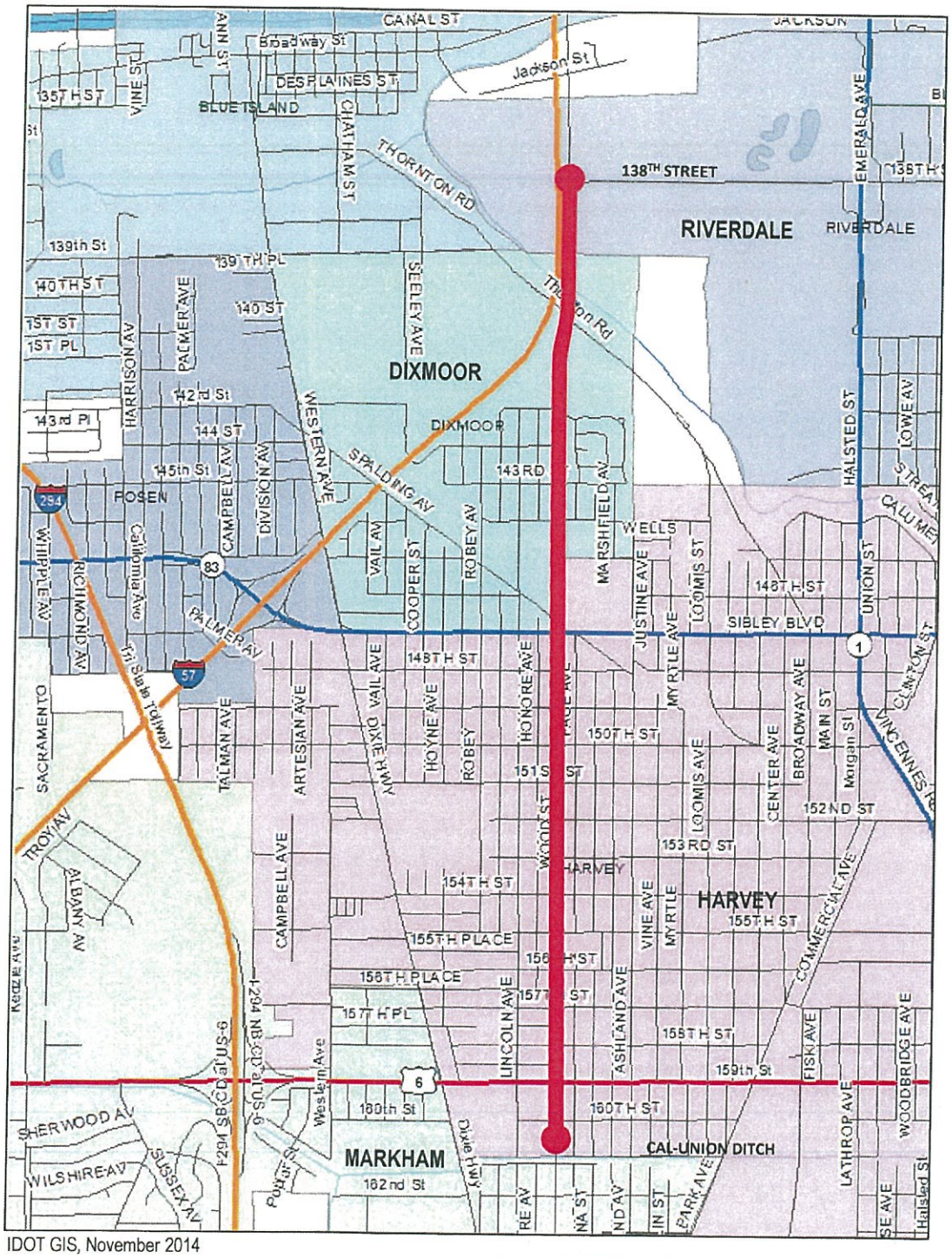

Legend

Study Limits

LOCAL JURISDICTION MAP

Wood Street
North of Little Calumet River to
South of US Route 6 (159th Street)
Cook County
P-91-161-10

EXHIBIT E-1

BDE 5401 Template (Rev. 09/05/2013)

IDOT MECHANISTIC PAVEMENT DESIGN

Printed: 12/04/2015

PROJECT AND TRAFFIC INPUTS

(Enter Data in Gray Shaded Cells)

Route: Wood Street
Section: (145, 146&146S-2)WRS&B-1
County: Cook
Location: Little Cal River to US 6

Comments: Wood St (Little Calumet River to US 6)
Design Date: 11/16/2015 ONP <-- BY
Modify Date: <-- BY

	ADT	Year
Current:	15,300	2013
Future:	16,000	2040

Facility Type: Other Marked State Route
# of Lanes = 4
Road Class: I
Subgrade Support Rating (SSR): Poor
Construction Year: 2016
Design Period (DP) = 20 years

	Minimum ADT	Structural Design Traffic: Actual ADT	Actual %of Total ADT	% of ADT in Design Lane
PV =	0	14,441	92.4%	P = 32%
SU =	250	727	4.7%	S = 45%
MU =	750	469	3.0%	M = 45%
Struct. Design ADT =		15,637	(2026)	

TRAFFIC FACTOR CALCULATION

FLEXIBLE PAVEMENT			RIGID PAVEMENT		
Cpv =	0.15		Cpv =	0.15	
Csu =	132.5		Csu =	143.81	
Cmu =	482.53		Cmu =	696.42	
TF flexible (Actual) =	2.92	(Actual ADT)	TF rigid (Actual) =	3.90	(Actual ADT)
TF flexible (Min) =	3.56	(Min ADT Fig. 54-2.C)	TF rigid (Min) =	5.02	(Min ADT Fig. 54-2.C)

NEW CONSTRUCTION / RECONSTRUCTION PAVEMENT DESIGN CALCULATIONS

Full-Depth HMA Pavement

Goto Map

Use TF flexible =	3.56	
PG Grade Lower Binder Lifts =	PG 64-22	(Fig. 53-4.R)
HMA Mixture Temp. =	75.5	deg. F (Fig. 54-5.C)
Design HMA Mixture Modulus (E_{HMA}) =	680	ksi (Fig. 54-5.D)
Design HMA Strain (ε_{HMA}) =	84	(Fig. 54-5.E)
Full Depth HMA Design Thickness =	10.25	in. (Fig. 54-5.F)
Limiting Strain Criterion Thickness =	14.75	in. (Fig. 54-5.I)
Use Full-Depth HMA Thickness =	**10.25**	**inches**

JPC Pavement

Use TF rigid =	5.02	
Edge Support =	Tied	Shoulder or C.&G.
Rigid Pavt Thick. =	**9.00**	**in. (Fig. 54-4.E)**

CRC Pavement

Use TF rigid =	5.02	
IBR value =	3	
CRCP Thickness =	**8.00**	**in. (Fig. 54-4.M)**

TF MUST BE > 60 FOR CRCP

RECONSTRUCTION ONLY (SUPPLEMENTAL) PAVEMENT DESIGN CALCULATIONS

HMA Overlay of Rubblized PCC

Goto Map

Use TF flexible =	3.56	
HMA Overlay Design Thickness =	7.50	in. (Fig. 54-5.U)
Limiting Strain Criterion Thickness =		in. (Fig. 54-5.V)
Use HMA Overlay Thickness =	**999.00**	**inches**

Unbonded Concrete Overlay

Review 54-4.03 for limitations and special considerations.

JPCP Thickness = NA inches

CONTACT BMPR FOR ASSISTANCE

DESIGN TABLES FROM BDE MANUAL CHAPTER 54 - PAVEMENT DESIGN

Class I Roads	Class II Roads	Class III Roads	Class IV Roads
4 lanes or more Part of a future 4 lanes or more One-way Streets with ADT > 3500	2 lanes with ADT > 2000 One way Street with ADT <= 3500	2 Lanes (ADT 750 -2000)	2 Lanes (ADT < 750)

	Min. Str. Design Traffic (Fig 54-2.C)		
Facility Type	PV	SU	MU
Interstate or Freeway	0	500	1500
Other Marked State Route	0	250	750
Unmarked State Route	No Min	No Min	No Min

Class Table for One-Way Streets	
ADT	Class
0 - 3500	II
>3501	I

	Traffic Factor ESAL Coefficients			
	Rigid (Fig. 54-4.C)		Flexible (Fig. 54-5.B)	
Class	Csu	Cmu	Csu	Cmu
I	143.81	696.42	132.50	482.53
II	135.78	567.21	112.06	385.44
III	129.58	562.47	109.14	384.35
IV	129.58	562.47	109.14	384.35

Class Table for 2 or 3 lanes (not future 4 lane & not one-way street)	
ADT	Class
0 - 749	IV
750 - 2000	III
>2000	II

	Design Lane Distribution Factors For Structural Design Traffic (Fig. 54-2.B)					
	Rural			Urban		
Number of Lanes	P	S	M	P	S	M
1 Lane Ramp	100%	100%	100%	100%	100%	100%
2 or 3	50%	50%	50%	50%	50%	50%
4	32%	45%	45%	32%	45%	45%
6 or more	20%	40%	40%	8%	37%	37%

BDE 5401 Template (Rev. 09/05/2013) Printed: 12/04/2015

LIFE-CYCLE COST ANALYSIS: NEW CONSTRUCTION / RECONSTRUCTION

FULL-DEPTH HMA PAVEMENT

Standard Design

ROUTE	Wood Street
SECTION	(145, 146&146S-2)WRS&B-1
COUNTY	Cook
LOCATION	Little Cal River to US 6
FACILITY TYPE	NON-INTERSTATE

PROJECT LENGTH			17160	FT = = >	3.25 Miles
# OF CENTERLINES			4	CL	
# OF LANES			4	LANES	
# OF EDGES			2	EP	
LANE WIDTH - AVERAGE			12	FT	
SHOULDER WIDTH	HMA	Left	0	FT	
	HMA	Right	0	FT	
	Total Width of Paved Shoulders		0	FT	

PAVEMENT THICKNESS (FLEXIBLE)	10.25 IN	14.75 IN MAX	
SHOULDER THICKNESS	8.00 IN		Standard Design
POLICY OVERLAY THICKNESS	2.25 IN		

FLEX PAVEMENT TRAFFIC FACTORS	MINIMUM	ACTUAL	USE
	3.56	2.92	3.56

Read Me!

HMA COST PER TON	UNIT PRICE
HMA SURFACE	$105.93 / TON
HMA TOP BINDER	$88.11 / TON
HMA LOWER BINDER	$72.68 / TON
HMA BINDER (LEVELING)	$88.11 / TON
HMA SHOULDER	$72.00 / TON

INITIAL COSTS

ITEM	THICKNESS	100% QUANTITY	UNIT		UNIT PRICE		COST	
HMA PAVEMENT (FULL-DEPTH)	(10.25")	91,520	SQ YD	*	$47.87	/ SQ YD	$4,381,062	~
HMA SURFACE COURSE	(2.00")	10,286	TONS		$105.93	/ TON	$0	
HMA TOP BINDER COURSE	(2.25")	11,657	TONS		$88.11	/ TON	$0	
HMA LOWER BINDER COURSE	(6.00")	31,525	TONS		$72.68	/ TON	$0	
HMA SHOULDER	(8.00")	0	TONS		$72.00	/ TON	$0	~
CURB & GUTTER		34,320	LIN FT	*	$30.00	/ LIN FT	$1,029,600	
SUBBASE GRAN MATL TY C (TONS)		207	TONS		$25.00	/ TON	$5,175	
IMPROVED SUBGRADE:	Aggregate	96,684	SQ YD		$7.00	/ SQ YD	$676,788	
Reserved For User Supplied Item		0	UNITS		$0.00	/ UNITS	$0	
Reserved For User Supplied Item		0	UNITS		$0.00	/ UNITS	$0	
PAVEMENT REMOVAL		91,520	SQ YD		$15.00	/ SQ YD	$1,372,800	
SHOULDER REMOVAL		0	SQ YD		$0.00	/ SQ YD	$0	

Note: * Denotes User Supplied Quantity

FLEXIBLE CONSTRUCTION INITIAL COST	$7,465,425
FLEXIBLE CONSTRUCTION ANNUAL COST PER MILE	$93,686

MAINTENANCE COSTS:

ITEM		THICKNESS	MATERIAL	UNIT COST	
ROUTINE MAINTENANCE ACTIVITY				$0.00	LANE-MILE / YEAR
HMA OVERLAY PVMT SURF		(2.00")	Surface Mix	$11.91	/ SQ YD
HMA OVERLAY PVMT		(2.25")		$12.65	/ SQ YD
HMA SURFACE MIX		(1.50")	Surface Mix	$8.92	/ SQ YD
HMA BINDER MIX		(0.75")	eling Binder Mix	$3.72	/ SQ YD
HMA OVERLAY SHLD	(Year 30)	(2.25")	Shoulder Mix	$9.07	/ SQ YD
HMA OVERLAY SHLD		(2.00")	Shoulder Mix	$8.06	/ SQ YD
MILLING (2.00 IN)				$3.00	/ SQ YD
PARTIAL DEPTH PVMT PATCH		(Mill & Fill Surf)	Surface Mix	$81.86	/ SQ YD
PARTIAL DEPTH SHLD PATCH		(Mill & Fill Surf)	Shoulder Mix	$78.06	/ SQ YD
PARTIAL DEPTH PVMT PATCH		(Mill & Fill +2.00 ")	Leveling Binder Mix	$79.87	/ SQ YD
PARTIAL DEPTH SHLD PATCH		(Mill & Fill +2.00 ")	Shoulder Mix	$78.06	/ SQ YD
LONGITUDINAL SHOULDER JOINT ROUT & SEAL				$2.00	/ LIN FT
CENTERLINE JOINT ROUT & SEAL				$2.00	/ LIN FT
RANDOM / THERMAL CRACK ROUT & SEAL		(100% Rehab = 110.00' / Station / Lane)		$2.00	/ LIN FT

FLEXIBLE TOTAL LIFE-CYCLE COST	$10,037,391
FLEXIBLE TOTAL ANNUAL COST PER MILE	$125,962

MAINTENANCE AND REHABILITATION ACTIVITY SCHEDULE 12/04/15

FULL-DEPTH HMA PAVEMENT
HMA OVERLAY OF RUBBLIZED PCC PAVEMENT
Figure 54-7.C
STANDARD DESIGN

MAINTENANCE COSTS:	ITEM	%	QUANTITY	UNIT	UNIT COST		COST	PRESENT WORTH
YEAR 5								
	LONG SHLD JT R&S	100.00%	34,320	LIN FT	$2.00		$68,640	
	CNTR LINE JOINT R&S	100.00%	68,640	LIN FT	$2.00		$137,280	
	RNDM / THRM CRACK R&S	50.00%	37,752	LIN FT	$2.00		$75,504	
	PD PVMT PATCH M&F SURF	0.10%	92	SQ YD	$81.86		$7,532	
	PWFn =	0.8626		PW =	0.8626	X	$288,956	$249,256
YEAR 10								
	LONG SHLD JT R&S	100.00%	34,320	LIN FT	$2.00		$68,640	
	CNTR LINE JOINT R&S	100.00%	68,640	LIN FT	$2.00		$137,280	
	RNDM / THRM CRACK R&S	50.00%	37,752	LIN FT	$2.00		$75,504	
	PD PVMT PATCH M&F SURF	0.50%	458	SQ YD	$81.86		$37,494	
	PWFn =	0.7441		PW =	0.7441	X	$318,918	$237,305
YEAR 15								
	MILL PVMT & SHLD 2.00"	100.00%	91,520	SQ YD	$3.00		$274,560	
	PD PVMT PATCH M&F ADD'L 2.00"	1.00%	915	SQ YD	$79.87		$73,080	
	HMA OVERLAY PVMT 2.00"	100.00%	91,520	SQ YD	$11.91		$1,089,578	
	HMA OVERLAY SHLD 2.00 "	100.00%	0	SQ YD	$8.06		$0	
	PWFn =	0.6419		PW =	0.6419	X	$1,437,218	$922,496
YEAR 20								
	LONG SHLD JT R&S	100.00%	34,320	LIN FT	$2.00		$68,640	
	CNTR LINE JOINT R&S	100.00%	68,640	LIN FT	$2.00		$137,280	
	RNDM / THRM CRACK R&S	50.00%	37,752	LIN FT	$2.00		$75,504	
	PD PVMT PATCH M&F SURF	0.10%	92	SQ YD	$81.86		$7,532	
	PWFn =	0.5537		PW =	0.5537	X	$288,956	$159,988
YEAR 25								
	LONG SHLD JT R&S	100.00%	34,320	LIN FT	$2.00		$68,640	
	CNTR LINE JOINT R&S	100.00%	68,640	LIN FT	$2.00		$137,280	
	RNDM / THRM CRACK R&S	50.00%	37,752	LIN FT	$2.00		$75,504	
	PD PVMT PATCH M&F SURF	0.50%	458	SQ YD	$81.86		$37,494	
	PWFn =	0.4776		PW =	0.4776	X	$318,918	$152,317
	HMA_SD							
YEAR 30	NON-INTERSTATE							
	MILL PVMT & SHLD 2.00"	100.00%	91,520	SQ YD	$3.00		$274,560	
	PD PVMT PATCH M&F ADD'L 2.00"	2.00%	1,830	SQ YD	$79.87		$146,159	
	PD SHLD PATCH M&F ADD'L 2.00"	1.00%	0	SQ YD	$78.06		$0	
	HMA OVERLAY PVMT 2.25 "	100.00%	91,520	SQ YD	$12.65		$1,157,362	
	HMA OVERLAY SHLD 2.25 "	100.00%	0	SQ YD	$9.07		$0	
	PWFn =	0.4120		PW =	0.4120	X	$1,578,081	$650,148
YEAR 35								
	LONG SHLD JT R&S	100.00%	34,320	LIN FT	$2.00		$68,640	
	CNTR LINE JOINT R&S	100.00%	68,640	LIN FT	$2.00		$137,280	
	RNDM / THRM CRACK R&S	50.00%	37,752	LIN FT	$2.00		$75,504	
	PD PVMT PATCH M&F SURF	0.10%	92	SQ YD	$81.86		$7,532	
	PWFn =	0.3554		PW =	0.3554	X	$288,956	$102,690
YEAR 40								
	LONG SHLD JT R&S	100.00%	34,320	LIN FT	$2.00		$68,640	
	CNTR LINE JOINT R&S	100.00%	68,640	LIN FT	$2.00		$137,280	
	RNDM / THRM CRACK R&S	50.00%	37,752	LIN FT	$2.00		$75,504	
	PD PVMT PATCH M&F SURF	0.50%	458	SQ YD	$81.86		$37,494	
	PWFn =	0.3066		PW =	0.3066	X	$318,918	$97,766
								$2,571,966
	ROUTINE MAINTENANCE ACTIVITY		13.00	Lane Miles	0.00		$0	$0
					MAINTENANCE LIFE-CYCLE COST			$2,571,966
45	YEAR LIFE CYCLE	CRFn = 0.0407852			MAINTENANCE ANNUAL COST PER MILE			$32,276

PCC PAVEMENT

JPCP

ROUTE			Wood Street	
SECTION			(145, 146&146S-2)WRS&B-1	
COUNTY			Cook	
LOCATION			Little Cal River to US 6	
FACILITY TYPE			NON-INTERSTATE	
PROJECT LENGTH			17160 FT = = >	3.25 Miles
# OF CENTERLINES			4 CL	
# OF LANES			4 LANES	
# OF EDGES			2 EP	
LANE WIDTH - AVERAGE			12 FT	
SHOULDER WIDTH	PCC	Left	0 FT	
	PCC	Right	0 FT	
	Total Width of Paved Shoulders		0 FT	

PAVEMENT THICKNESS (RIGID)	JPCP	9.00 IN	TIED SHLD
SHOULDER THICKNESS		9.00 IN	
POLICY OVERLAY THICKNESS		2.50 IN	

RIGID PAVEMENT TRAFFIC FACTORS		MINIMUM	ACTUAL	USE
		5.02	3.90	5.02
Worksheet Construction Type is	Reconstruction		The Pavement Type is	JPCP

INITIAL COSTS

ITEM	THICKNESS	100% QUANTITY	UNIT		UNIT PRICE		COST
JPC PAVEMENT	(9.00")	91,520	SQ YD		$47.68	/ SQ YD	$4,363,674
PAVEMENT REINFORCEMENT		0	SQ YD		$22.00	/ SQ YD	$0
STABILIZED SUBBASE	(4.00")	0	SQ YD	*	$19.00	/ SQ YD	$0
PCC SHOULDERS	(9.00" to 9.00")	0	SQ YD		$40.00	/ SQ YD	$0
CURB & GUTTER		34,320	LIN FT	*	$30.00	/ LIN FT	$1,029,600
SUBBASE GRAN MATL TY C	(~ 0.00")	0	TONS		$25.00	/ TON	$0
IMPROVED SUBGRADE:	Aggregate	93,427	SQ YD		$7.00	/ SQ YD	$653,989
Reserved For User Supplied Item		0	UNITS		$0.00	/ UNITS	$0
Reserved For User Supplied Item		0	UNITS		$0.00	/ UNITS	$0
PAVEMENT REMOVAL		91,520	SQ YD		$15.00	/ SQ YD	$1,372,800
SHOULDER REMOVAL		0	SQ YD		$0.00	/ SQ YD	$0

Note: * Denotes User Supplied Quantity

RIGID CONSTRUCTION INITIAL COST	$7,420,063
RIGID CONSTRUCTION ANNUAL COST PER MILE	$93,116

MAINTENANCE COSTS:

ITEM	THICKNESS	MATERIAL	UNIT COST	
ROUTINE MAINTENANCE ACTIVITY			$0.00	/ LANE-MILE / YEAR
HMA POLICY OVERLAY	(2.50")			
HMA POLICY OVERLAY PVMT	(2.50")		$13.89	/ SQ YD
HMA SURFACE MIX	(1.50")	Surface Mix	$8.92	/ SQ YD
HMA BINDER MIX	(1.00")	eling Binder Mix	$4.97	/ SQ YD
HMA POLICY OVERLAY SHLD	(2.50")	Shoulder Mix	$10.08	/ SQ YD
CLASS A PAVEMENT PATCHING			$195.00	/ SQ YD
CLASS B PAVEMENT PATCHING			$150.00	/ SQ YD
CLASS C SHOULDER PATCHING			$145.00	/ SQ YD
PARTIAL DEPTH PVMT PATCH (Mill & Fill HMA Surf)		Surface Mix	$78.90	/ SQ YD
PARTIAL DEPTH PVMT PATCH (Mill & Fill HMA 2.50")		Surface Mix	$84.83	/ SQ YD
LONGITUDINAL SHOULDER JOINT ROUT & SEAL			$2.00	/ LIN FT
CENTERLINE JOINT ROUT & SEAL			$2.00	/ LIN FT
REFLECTIVE TRANSVERSE CRACK ROUT & SEAL			$2.00	/ LIN FT
RANDOM CRACK ROUT & SEAL	(100% Rehab = 100.00' / Station / Lane)		$2.00	/ LIN FT

RIGID TOTAL LIFE-CYCLE COST	$8,913,926
RIGID TOTAL ANNUAL COST PER MILE	$111,863

MAINTENANCE AND REHABILITATION ACTIVITY SCHEDULE 12/04/15

JOINTED PLAIN CONCRETE PAVEMENT
UNBONDED JOINTED PLAIN CONCRETE OVERLAY
Figure 54-7.A

MAINTENANCE COSTS:	ITEM	%	QUANTITY	UNIT	UNIT COST		COST	PRESENT WORTH
YEAR 10								
	PAVEMENT PATCH CLASS B	0.10%	92	SQ YD	$150.00		$13,800	
	PWFn =	0.7441		PW =	0.7441	X	$13,800	$10,268
YEAR 15								
	PAVEMENT PATCH CLASS B	0.20%	183	SQ YD	$150.00		$27,450	
	PWFn =	0.6419		PW =	0.6419	X	$27,450	$17,619
YEAR 20								
	PAVEMENT PATCH CLASS B	2.00%	1,830	SQ YD	$150.00		$274,500	
	SHOULDER PATCH CLASS C	0.50%	0	SQ YD	$145.00		$0	
	LONGITUDINAL SHLD JT R&S	100.00%	34,320	LIN FT	$2.00		$68,640	
	CENTERLINE JT R&S	100.00%	68,640	LIN FT	$2.00		$137,280	
	PWFn =	0.5537		PW =	0.5537	X	$480,420	$265,997
YEAR 25								
	PAVEMENT PATCH CLASS B	3.00%	2,746	SQ YD	$150.00		$411,900	
	SHOULDER PATCH CLASS C	1.00%	0	SQ YD	$145.00		$0	
	PWFn =	0.4776		PW =	0.4776	X	$411,900	$196,726
YEAR 30	NON-INTERSTATE							
	PAVEMENT PATCH CLASS B	4.00%	3,661	SQ YD	$150.00		$549,150	
	SHOULDER PATCH CLASS C	1.50%	0	SQ YD	$145.00		$0	
	HMA POLICY OVERLAY 2.5" (PVMT)	100.00%	91,520	SQ YD	$13.89		$1,271,187	
	HMA POLICY OVERLAY 2.5" (SHLD)	100.00%	0	SQ YD	$10.08		$0	
	PWFn =	0.4120		PW =	0.4120	X	$1,820,337	$749,955
YEAR 35	NON-INTERSTATE							
	LONGITUDINAL SHLD JT R&S	100.00%	34,320	LIN FT	$2.00		$68,640	
	CENTERLINE JT R&S	100.00%	68,640	LIN FT	$2.00		$137,280	
	RANDOM CRACK R&S	50.00%	34,320	LIN FT	$2.00		$68,640	
	REFLECTIVE TRANSVERSE CRACK R&S	40.00%	21,965	LIN FT	$2.00		$43,930	
	PD PVMT PATCH M&F HMA 2.50"	0.10%	92	SQ YD	$84.83		$7,804	
	PWFn =	0.3554		PW =	0.3554	X	$326,294	$115,959
YEAR 40	NON-INTERSTATE							
	PAVEMENT PATCH CLASS B	0.50%	458	SQ YD	$150.00		$68,700	
	LONGITUDINAL SHLD JT R&S	100.00%	34,320	LIN FT	$2.00		$68,640	
	CENTERLINE JT R&S	100.00%	68,640	LIN FT	$2.00		$137,280	
	REFLECTIVE TRANSVERSE CRACK R&S	60.00%	32,947	LIN FT	$2.00		$65,894	
	RANDOM CRACK R&S	50.00%	34,320	LIN FT	$2.00		$68,640	
	PD PVMT PATCH M&F HMA 2.50"	0.50%	458	SQ YD	$84.83		$38,852	
	PWFn =	0.3066		PW =	0.3066	X	$448,006	$137,339
								$1,493,863
	ROUTINE MAINTENANCE ACTIVITY		13.00	Lane Miles	$0.00		$0	$0
					MAINTENANCE LIFE-CYCLE COST			$1,493,863
45	YEAR LIFE CYCLE	CRFn = 0.0407852			MAINTENANCE ANNUAL COST PER MILE			$18,747

LIFE-CYCLE COST ANALYSIS: NEW DESIGN

Calculated / Revised : 11/24/15 3:20 PM

			JPCP	HMA
CONSTRUCTION	INITIAL COST	PRESENT WORTH	$7,420,063	$7,465,425
		ANNUAL COST PER MILE	$93,116	$93,686
MAINTENANCE	LIFE-CYCLE COST	PRESENT WORTH	$1,493,863	$2,571,966
		ANNUAL COST PER MILE	$18,747	$32,276
TOTAL	LIFE-CYCLE COST	PRESENT WORTH	$8,913,926	$10,037,391
		ANNUAL COST PER MILE	$111,863	$125,962

LIFE-CYCLE COST ANALYSIS: FINAL SUMMARY

LOWEST COST OPTION	==========>	**JPCP**	**$111,863**	
OTHER OPTIONS (LOWEST TO HIGHEST):	TYPE / PERCENTAGE	**HMA**	**$125,962**	**12.6%**

P:\Pavement Design Stuff\D-1\Wood Street at Thornton Road [LR lead] 12-02-15\Wood Street at Thorton Road Pavement Analysis Files\[Wood Street at Thornton R

BDE 5401 Template (Rev. 09/05/2013)

IDOT MECHANISTIC PAVEMENT DESIGN

Printed: 12/04/2015

PROJECT AND TRAFFIC INPUTS

(Enter Data in Gray Shaded Cells)

Route: Thornton Road
Section: (145, 146&146S-2)WRS&B-1
County: Cook
Location: at Wood Street

Comments: Wood St (Little Calumet River to US 6)
Design Date: 11/16/2015 ONP
Modify Date:

	ADT	Year
<-- BY		
<-- BY		
Current:	6,100	2010
Future:	9,000	2040

Facility Type: Unmarked State Route
# of Lanes = 2 or 3
Part of future 4 lanes or more ? No
One Way Street ? No
Road Class: II

Subgrade Support Rating (SSR): Poor
Construction Year: 2016
Design Period (DP) = 20 years

	Structural Design Traffic			
	Minimum ADT	Actual ADT	Actual %of Total ADT	% of ADT in Design Lane
PV =	No Min	6,974	91.2%	P = 50%
SU =	No Min	574	7.5%	S = 50%
MU =	No Min	99	1.3%	M = 50%
Struct. Design ADT =		7,647	(2026)	

TRAFFIC FACTOR CALCULATION

FLEXIBLE PAVEMENT			RIGID PAVEMENT		
Cpv =	0.15		Cpv =	0.15	
Csu =	112.06		Csu =	135.78	
Cmu =	385.44		Cmu =	567.21	
TF flexible (Actual) =	1.04	(Actual ADT)	TF rigid (Actual) =	1.35	(Actual ADT)
TF flexible (Min) =	No Min	(Min ADT Fig. 54-2.C)	TF rigid (Min) =	No Min	(Min ADT Fig. 54-2.C)

NEW CONSTRUCTION / RECONSTRUCTION PAVEMENT DESIGN CALCULATIONS

Full-Depth HMA Pavement

Use TF flexible = 1.04
PG Grade Lower Binder Lifts = PG 64-22 (Fig. 53-4.R)
Goto Map
HMA Mixture Temp. = 75.5 deg. F (Fig. 54-5.C)
Design HMA Mixture Modulus (E_{HMA}) = 680 ksi (Fig. 54-5.D)
Design HMA Strain (ε_{HMA}) = 119 (Fig. 54-5.E)
Goto Map
Full Depth HMA Design Thickness = 8.25 in. (Fig. 54-5.F)
Limiting Strain Criterion Thickness = 14.75 in. (Fig. 54-5.I)

Use Full-Depth HMA Thickness = 8.25 inches

JPC Pavement

Use TF rigid = 1.35
Edge Support = Tied Shoulder or C.&G.

Rigid Pavt Thick. = 8.00 in. (Fig. 54-4.E)

CRC Pavement

Use TF rigid = 1.35
IBR value = 3

CRCP Thickness = 6.25 in. (Fig. 54-4.N)

TF MUST BE > 60 FOR CRCP

RECONSTRUCTION ONLY (SUPPLEMENTAL) PAVEMENT DESIGN CALCULATIONS

HMA Overlay of Rubblized PCC

Use TF flexible = 1.04
Goto Map
HMA Overlay Design Thickness = 5.75 in. (Fig. 54-5.U)
Limiting Strain Criterion Thickness = in. (Fig. 54-5.V)

Use HMA Overlay Thickness = 999.00 inches

Unbonded Concrete Overlay

Review 54-4.03 for limitations and special considerations.

JPCP Thickness = NA inches

CONTACT BMPR FOR ASSISTANCE

DESIGN TABLES FROM BDE MANUAL CHAPTER 54 - PAVEMENT DESIGN

Class I Roads	Class II Roads	Class III Roads	Class IV Roads
4 lanes or more Part of a future 4 lanes or more One-way Streets with ADT > 3500	2 lanes with ADT > 2000 One way Street with ADT <= 3500	2 Lanes (ADT 750 -2000)	2 Lanes (ADT < 750)

	Min. Str. Design Traffic (Fig 54-2.C)		
Facility Type	PV	SU	MU
Interstate or Freeway	0	500	1500
Other Marked State Route	0	250	750
Unmarked State Route	No Min	No Min	No Min

Class Table for One-Way Streets	
ADT	Class
0 - 3500	II
>3501	I

	Traffic Factor ESAL Coefficients			
	Rigid (Fig. 54-4.C)		Flexible (Fig. 54-5.B)	
Class	Csu	Cmu	Csu	Cmu
I	143.81	696.42	132.50	482.53
II	135.78	567.21	112.06	385.44
III	129.58	562.47	109.14	384.35
IV	129.58	562.47	109.14	384.35

Class Table for 2 or 3 lanes (not future 4 lane & not one-way street)	
ADT	Class
0 - 749	IV
750 - 2000	III
>2000	II

	Design Lane Distribution Factors For Structural Design Traffic (Fig. 54-2.B)					
	Rural			Urban		
Number of Lanes	P	S	M	P	S	M
1 Lane Ramp	100%	100%	100%	100%	100%	100%
2 or 3	50%	50%	50%	50%	50%	50%
4	32%	45%	45%	32%	45%	45%
6 or more	20%	40%	40%	8%	37%	37%

BDE 5401 Template (Rev. 09/05/2013) Printed: 12/04/2015

LIFE-CYCLE COST ANALYSIS: NEW CONSTRUCTION / RECONSTRUCTION

FULL-DEPTH HMA PAVEMENT

Standard Design

ROUTE	Thornton Road
SECTION	(145, 146&146S-2)WRS&B-1
COUNTY	Cook
LOCATION	at Wood Street
FACILITY TYPE	NON-INTERSTATE

PROJECT LENGTH		400 FT	= = >	0.08 Miles
# OF CENTERLINES		2 CL		
# OF LANES		3 LANES		
# OF EDGES		2 EP		
LANE WIDTH - AVERAGE		12 FT		
SHOULDER WIDTH	HMA Left	0 FT		
	HMA Right	0 FT		
	Total Width of Paved Shoulders	0 FT		

PAVEMENT THICKNESS (FLEXIBLE)	8.25 IN	14.75 IN MAX	
SHOULDER THICKNESS	8.00 IN		Standard Design
POLICY OVERLAY THICKNESS	2.25 IN		

FLEX PAVEMENT TRAFFIC FACTORS	MINIMUM	ACTUAL	USE
	No Min	1.04	1.04

Read Me!

HMA COST PER TON	UNIT PRICE
HMA SURFACE	$160.60 / TON
HMA TOP BINDER	$143.74 / TON
HMA LOWER BINDER	$91.32 / TON
HMA BINDER (LEVELING)	$143.74 / TON
HMA SHOULDER	$72.00 / TON

INITIAL COSTS

ITEM	THICKNESS	100% QUANTITY	UNIT		UNIT PRICE	COST	
HMA PAVEMENT (FULL-DEPTH)	(8.25")	1,600	SQ YD	*	$57.27 / SQ YD	$91,632	~
HMA SURFACE COURSE	(2.00")	180	TONS		$160.60 / TON	$0	
HMA TOP BINDER COURSE	(2.25")	205	TONS		$143.74 / TON	$0	
HMA LOWER BINDER COURSE	(4.00")	369	TONS		$91.32 / TON	$0	
HMA SHOULDER	(8.00")	0	TONS		$72.00 / TON	$0	~
CURB & GUTTER		2,000	LIN FT	*	$30.00 / LIN FT	$60,000	
SUBBASE GRAN MATL TY C (TONS)		0	TONS		$25.00 / TON	$0	
IMPROVED SUBGRADE:	Aggregate	1,706	SQ YD		$7.00 / SQ YD	$11,942	
Reserved For User Supplied Item		0	UNITS		$0.00 / UNITS	$0	
Reserved For User Supplied Item		0	UNITS		$0.00 / UNITS	$0	
PAVEMENT REMOVAL		1,600	SQ YD		$15.00 / SQ YD	$24,000	
SHOULDER REMOVAL		0	SQ YD		$0.00 / SQ YD	$0	

Note: * Denotes User Supplied Quantity

FLEXIBLE CONSTRUCTION INITIAL COST	$187,574
FLEXIBLE CONSTRUCTION ANNUAL COST PER MILE	$100,983

MAINTENANCE COSTS:

ITEM		THICKNESS	MATERIAL	UNIT COST	
ROUTINE MAINTENANCE ACTIVITY				$0.00	LANE-MILE / YEAR
HMA OVERLAY PVMT SURF		(2.00")	Surface Mix	$18.07	/ SQ YD
HMA OVERLAY PVMT		(2.25")		$19.63	/ SQ YD
HMA SURFACE MIX		(1.50")	Surface Mix	$13.54	/ SQ YD
HMA BINDER MIX		(0.75")	eling Binder Mix	$6.09	/ SQ YD
HMA OVERLAY SHLD	(Year 30)	(2.25")	Shoulder Mix	$9.07	/ SQ YD
HMA OVERLAY SHLD		(2.00")	Shoulder Mix	$8.06	/ SQ YD
MILLING (2.00 IN)				$3.00	/ SQ YD
PARTIAL DEPTH PVMT PATCH		(Mill & Fill Surf)	Surface Mix	$87.99	/ SQ YD
PARTIAL DEPTH SHLD PATCH		(Mill & Fill Surf)	Shoulder Mix	$78.06	/ SQ YD
PARTIAL DEPTH PVMT PATCH		(Mill & Fill +2.00 ")	Leveling Binder Mix	$86.10	/ SQ YD
PARTIAL DEPTH SHLD PATCH		(Mill & Fill +2.00 ")	Shoulder Mix	$78.06	/ SQ YD
LONGITUDINAL SHOULDER JOINT ROUT & SEAL				$2.00	/ LIN FT
CENTERLINE JOINT ROUT & SEAL				$2.00	/ LIN FT
RANDOM / THERMAL CRACK ROUT & SEAL		(100% Rehab = 110.00' / Station / Lane)		$2.00	/ LIN FT

FLEXIBLE TOTAL LIFE-CYCLE COST	$242,451
FLEXIBLE TOTAL ANNUAL COST PER MILE	$130,527

MAINTENANCE AND REHABILITATION ACTIVITY SCHEDULE 12/04/15

FULL-DEPTH HMA PAVEMENT
HMA OVERLAY OF RUBBLIZED PCC PAVEMENT
Figure 54-7.C
STANDARD DESIGN

MAINTENANCE COSTS:	ITEM	%	QUANTITY	UNIT	UNIT COST		COST	PRESENT WORTH
YEAR 5								
	LONG SHLD JT R&S	100.00%	800	LIN FT	$2.00		$1,600	
	CNTR LINE JOINT R&S	100.00%	800	LIN FT	$2.00		$1,600	
	RNDM / THRM CRACK R&S	50.00%	660	LIN FT	$2.00		$1,320	
	PD PVMT PATCH M&F SURF	0.10%	2	SQ YD	$87.99		$176	
	PWFn =	0.8626		PW =	0.8626	X	$4,696	$4,051
YEAR 10								
	LONG SHLD JT R&S	100.00%	800	LIN FT	$2.00		$1,600	
	CNTR LINE JOINT R&S	100.00%	800	LIN FT	$2.00		$1,600	
	RNDM / THRM CRACK R&S	50.00%	660	LIN FT	$2.00		$1,320	
	PD PVMT PATCH M&F SURF	0.50%	8	SQ YD	$87.99		$704	
	PWFn =	0.7441		PW =	0.7441	X	$5,224	$3,887
YEAR 15								
	MILL PVMT & SHLD 2.00"	100.00%	1,600	SQ YD	$3.00		$4,800	
	PD PVMT PATCH M&F ADD'L 2.00"	1.00%	16	SQ YD	$86.10		$1,378	
	HMA OVERLAY PVMT 2.00"	100.00%	1,600	SQ YD	$18.07		$28,913	
	HMA OVERLAY SHLD 2.00 "	100.00%	0	SQ YD	$8.06		$0	
	PWFn =	0.6419		PW =	0.6419	X	$35,091	$22,524
YEAR 20								
	LONG SHLD JT R&S	100.00%	800	LIN FT	$2.00		$1,600	
	CNTR LINE JOINT R&S	100.00%	800	LIN FT	$2.00		$1,600	
	RNDM / THRM CRACK R&S	50.00%	660	LIN FT	$2.00		$1,320	
	PD PVMT PATCH M&F SURF	0.10%	2	SQ YD	$87.99		$176	
	PWFn =	0.5537		PW =	0.5537	X	$4,696	$2,600
YEAR 25								
	LONG SHLD JT R&S	100.00%	800	LIN FT	$2.00		$1,600	
	CNTR LINE JOINT R&S	100.00%	800	LIN FT	$2.00		$1,600	
	RNDM / THRM CRACK R&S	50.00%	660	LIN FT	$2.00		$1,320	
	PD PVMT PATCH M&F SURF	0.50%	8	SQ YD	$87.99		$704	
	PWFn =	0.4776		PW =	0.4776	X	$5,224	$2,495
	HMA_SD							
YEAR 30	NON-INTERSTATE							
	MILL PVMT & SHLD 2.00"	100.00%	1,600	SQ YD	$3.00		$4,800	
	PD PVMT PATCH M&F ADD'L 2.00"	2.00%	32	SQ YD	$86.10		$2,755	
	PD SHLD PATCH M&F ADD'L 2.00"	1.00%	0	SQ YD	$78.06		$0	
	HMA OVERLAY PVMT 2.25 "	100.00%	1,600	SQ YD	$19.63		$31,403	
	HMA OVERLAY SHLD 2.25 "	100.00%	0	SQ YD	$9.07		$0	
	PWFn =	0.4120		PW =	0.4120	X	$38,958	$16,050
YEAR 35								
	LONG SHLD JT R&S	100.00%	800	LIN FT	$2.00		$1,600	
	CNTR LINE JOINT R&S	100.00%	800	LIN FT	$2.00		$1,600	
	RNDM / THRM CRACK R&S	50.00%	660	LIN FT	$2.00		$1,320	
	PD PVMT PATCH M&F SURF	0.10%	2	SQ YD	$87.99		$176	
	PWFn =	0.3554		PW =	0.3554	X	$4,696	$1,669
YEAR 40								
	LONG SHLD JT R&S	100.00%	800	LIN FT	$2.00		$1,600	
	CNTR LINE JOINT R&S	100.00%	800	LIN FT	$2.00		$1,600	
	RNDM / THRM CRACK R&S	50.00%	660	LIN FT	$2.00		$1,320	
	PD PVMT PATCH M&F SURF	0.50%	8	SQ YD	$87.99		$704	
	PWFn =	0.3066		PW =	0.3066	X	$5,224	$1,601
								$54,877
	ROUTINE MAINTENANCE ACTIVITY		0.23	Lane Miles	0.00		$0	$0
					MAINTENANCE LIFE-CYCLE COST			$54,877
45	YEAR LIFE CYCLE	CRFn = 0.0407852			MAINTENANCE ANNUAL COST PER MILE			$29,544

PCC PAVEMENT

JPCP

ROUTE			Thornton Road	
SECTION			(145, 146&146S-2)WRS&B-1	
COUNTY			Cook	
LOCATION			at Wood Street	
FACILITY TYPE			NON-INTERSTATE	
PROJECT LENGTH			400 FT	= = > 0.08 Miles
# OF CENTERLINES			2 CL	
# OF LANES			3 LANES	
# OF EDGES			2 EP	
LANE WIDTH - AVERAGE			12 FT	
SHOULDER WIDTH	PCC	Left	0 FT	
	PCC	Right	0 FT	
	Total Width of Paved Shoulders		0 FT	

PAVEMENT THICKNESS (RIGID)	JPCP	8.00 IN	TIED SHLD
SHOULDER THICKNESS		8.00 IN	
POLICY OVERLAY THICKNESS		2.50 IN	

RIGID PAVEMENT TRAFFIC FACTORS		MINIMUM	ACTUAL	USE
		No Min	1.35	1.35
Worksheet Construction Type is	Reconstruction		The Pavement Type is	JPCP

INITIAL COSTS

ITEM	THICKNESS	100% QUANTITY	UNIT		UNIT PRICE		COST
JPC PAVEMENT	(8.00")	1,600	SQ YD		$55.82	/ SQ YD	$89,312
PAVEMENT REINFORCEMENT		0	SQ YD		$22.00	/ SQ YD	$0
STABILIZED SUBBASE	(4.00")	0	SQ YD	*	$19.00	/ SQ YD	$0
PCC SHOULDERS	(8.00" to 8.00")	0	SQ YD		$40.00	/ SQ YD	$0
CURB & GUTTER		2,000	LIN FT	*	$30.00	/ LIN FT	$60,000
SUBBASE GRAN MATL TY C	(~ 0.00")	0	TONS		$25.00	/ TON	$0
IMPROVED SUBGRADE:	Aggregate	1,644	SQ YD		$7.00	/ SQ YD	$11,508
Reserved For User Supplied Item		0	UNITS		$0.00	/ UNITS	$0
Reserved For User Supplied Item		0	UNITS		$0.00	/ UNITS	$0
PAVEMENT REMOVAL		1,600	SQ YD		$15.00	/ SQ YD	$24,000
SHOULDER REMOVAL		0	SQ YD		$0.00	/ SQ YD	$0

Note: * Denotes User Supplied Quantity

RIGID CONSTRUCTION INITIAL COST	$184,820
RIGID CONSTRUCTION ANNUAL COST PER MILE	$99,500

MAINTENANCE COSTS:

ITEM	THICKNESS	MATERIAL		UNIT COST	
ROUTINE MAINTENANCE ACTIVITY				$0.00	/ LANE-MILE / YEAR
HMA POLICY OVERLAY	(2.50")				
HMA POLICY OVERLAY PVMT	(2.50")			$21.66	/ SQ YD
HMA SURFACE MIX	(1.50")	Surface Mix		$13.54	/ SQ YD
HMA BINDER MIX	(1.00")	eling Binder Mix		$8.12	/ SQ YD
HMA POLICY OVERLAY SHLD	(2.50")	Shoulder Mix		$10.08	/ SQ YD
CLASS A PAVEMENT PATCHING				$195.00	/ SQ YD
CLASS B PAVEMENT PATCHING				$150.00	/ SQ YD
CLASS C SHOULDER PATCHING				$145.00	/ SQ YD
PARTIAL DEPTH PVMT PATCH (Mill & Fill HMA Surf)		Surface Mix		$83.49	/ SQ YD
PARTIAL DEPTH PVMT PATCH (Mill & Fill HMA 2.50")		Surface Mix		$92.48	/ SQ YD
LONGITUDINAL SHOULDER JOINT ROUT & SEAL				$2.00	/ LIN FT
CENTERLINE JOINT ROUT & SEAL				$2.00	/ LIN FT
REFLECTIVE TRANSVERSE CRACK ROUT & SEAL				$2.00	/ LIN FT
RANDOM CRACK ROUT & SEAL	(100% Rehab = 100.00' / Station / Lane)			$2.00	/ LIN FT

RIGID TOTAL LIFE-CYCLE COST	$215,641
RIGID TOTAL ANNUAL COST PER MILE	$116,093

MAINTENANCE AND REHABILITATION ACTIVITY SCHEDULE 12/04/15

JOINTED PLAIN CONCRETE PAVEMENT
UNBONDED JOINTED PLAIN CONCRETE OVERLAY
Figure 54-7.A

MAINTENANCE COSTS:	ITEM	%	QUANTITY	UNIT	UNIT COST		COST	PRESENT WORTH
YEAR 10								
	PAVEMENT PATCH CLASS B	0.10%	2	SQ YD	$150.00		$300	
	PWFn =	0.7441		PW =	0.7441	X	$300	$223
YEAR 15								
	PAVEMENT PATCH CLASS B	0.20%	3	SQ YD	$150.00		$450	
	PWFn =	0.6419		PW =	0.6419	X	$450	$289
YEAR 20								
	PAVEMENT PATCH CLASS B	2.00%	32	SQ YD	$150.00		$4,800	
	SHOULDER PATCH CLASS C	0.50%	0	SQ YD	$145.00		$0	
	LONGITUDINAL SHLD JT R&S	100.00%	800	LIN FT	$2.00		$1,600	
	CENTERLINE JT R&S	100.00%	800	LIN FT	$2.00		$1,600	
	PWFn =	0.5537		PW =	0.5537	X	$8,000	$4,429
YEAR 25								
	PAVEMENT PATCH CLASS B	3.00%	48	SQ YD	$150.00		$7,200	
	SHOULDER PATCH CLASS C	1.00%	0	SQ YD	$145.00		$0	
	PWFn =	0.4776		PW =	0.4776	X	$7,200	$3,439
YEAR 30	NON-INTERSTATE							
	PAVEMENT PATCH CLASS B	4.00%	64	SQ YD	$150.00		$9,600	
	SHOULDER PATCH CLASS C	1.50%	0	SQ YD	$145.00		$0	
	HMA POLICY OVERLAY 2.5" (PVMT)	100.00%	1,600	SQ YD	$21.66		$34,658	
	HMA POLICY OVERLAY 2.5" (SHLD)	100.00%	0	SQ YD	$10.08		$0	
	PWFn =	0.4120		PW =	0.4120	X	$44,258	$18,234
YEAR 35	NON-INTERSTATE							
	LONGITUDINAL SHLD JT R&S	100.00%	800	LIN FT	$2.00		$1,600	
	CENTERLINE JT R&S	100.00%	800	LIN FT	$2.00		$1,600	
	RANDOM CRACK R&S	50.00%	600	LIN FT	$2.00		$1,200	
	REFLECTIVE TRANSVERSE CRACK R&S	40.00%	389	LIN FT	$2.00		$778	
	PD PVMT PATCH M&F HMA 2.50"	0.10%	2	SQ YD	$92.48		$185	
	PWFn =	0.3554		PW =	0.3554	X	$5,363	$1,906
YEAR 40	NON-INTERSTATE							
	PAVEMENT PATCH CLASS B	0.50%	8	SQ YD	$150.00		$1,200	
	LONGITUDINAL SHLD JT R&S	100.00%	800	LIN FT	$2.00		$1,600	
	CENTERLINE JT R&S	100.00%	800	LIN FT	$2.00		$1,600	
	REFLECTIVE TRANSVERSE CRACK R&S	60.00%	583	LIN FT	$2.00		$1,166	
	RANDOM CRACK R&S	50.00%	600	LIN FT	$2.00		$1,200	
	PD PVMT PATCH M&F HMA 2.50"	0.50%	8	SQ YD	$92.48		$740	
	PWFn =	0.3066		PW =	0.3066	X	$7,506	$2,301
								$30,821
	ROUTINE MAINTENANCE ACTIVITY		0.23	Lane Miles	$0.00		$0	$0
					MAINTENANCE LIFE-CYCLE COST			$30,821
45	YEAR LIFE CYCLE	CRFn = 0.0407852			MAINTENANCE ANNUAL COST PER MILE			$16,593

LIFE-CYCLE COST ANALYSIS: NEW DESIGN

Calculated / Revised : **11/25/15 8:12 AM**

			JPCP	HMA
CONSTRUCTION	INITIAL COST	PRESENT WORTH	$184,820	$187,574
		ANNUAL COST PER MILE	$99,500	$100,983
MAINTENANCE	LIFE-CYCLE COST	PRESENT WORTH	$30,821	$54,877
		ANNUAL COST PER MILE	$16,593	$29,544
TOTAL	LIFE-CYCLE COST	PRESENT WORTH	$215,641	$242,451
		ANNUAL COST PER MILE	$116,093	$130,527

LIFE-CYCLE COST ANALYSIS: FINAL SUMMARY

LOWEST COST OPTION	==========>	**JPCP**	**$116,093**	
OTHER OPTIONS (LOWEST TO HIGHEST):	TYPE / PERCENTAGE	**HMA**	**$130,527**	**12.4%**

P:\Pavement Design Stuff\D-1\Wood Street at Thornton Road [LR lead] 12-02-15\Wood Street at Thorton Road Pavement Analysis Files\[Wood Street at Thornton R

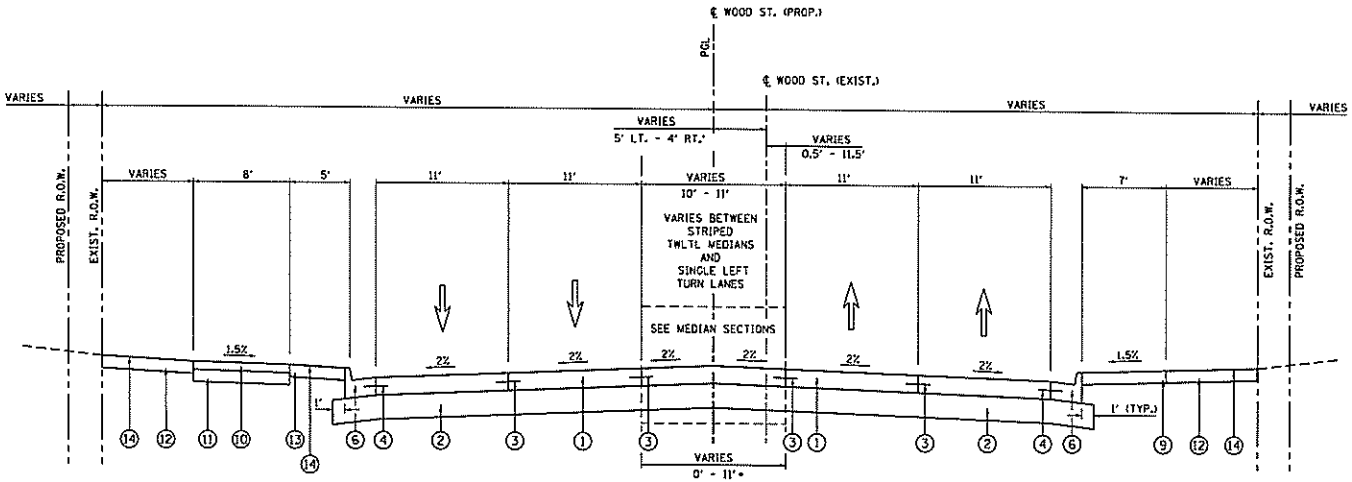

PROPOSED WOOD STREET

- STA. 113+79.14 TO 116+16.17 (TRANSITION FROM EXIST. 4 LANES TO PROP. 5 LANES)
- STA. 118+16.17 TO 124+77.74
- STA. 128+07.92 TO 208+02.42
- STA. 209+16 TO 209+18.49
- STA. 209+50.18 TO 209+52.67
- STA. 216+18.57 TO 216+22.53
- STA. 216+37.46 TO 216+39.95
- STA. 222+16.60 TO 235+50

PROPOSED LEGEND: WOOD STREET

1. PORTLAND CEMENT CONCRETE PAVEMENT, 8 3/4" (JOINTED)
2. AGGREGATE SUBGRADE IMPROVEMENT 12"
3. LONGITUDINAL CONSTRUCTION JOINT DRILLED AND GROUTED IN PLACE, NO. 6 TIE BAR AT 24" LONG, DEFORMED (EPOXY COATED) AT 24"CTS. (INCLUDED IN THE COST OF THE PROPOSED PAVEMENT)
4. NO. 6 TIE BAR AT 24" LONG, DEFORMED (EPOXY COATED) AT 24" CTS. (INCLUDED IN THE COST OF THE PROPOSED CURB AND GUTTER)
5. COMBINATION CONCRETE CURB & GUTTER, TYPE B-6.12
6. COMBINATION CONCRETE CURB & GUTTER, TYPE B-6.24
7. COMBINATION CONCRETE CURB & GUTTER, TYPE M-2.12
8. CONCRETE MEDIAN, TYPE SB-6.24
9. SIDEWALK, PORTLAND CEMENT CONCRETE SIDEWALK, 5" (SEE NOTE ....
10. HOT-MIX ASPHALT SHARED-USE PATH (SEE NOTES ...
11. SUB-BASE GRANULAR MATERIAL, TYPE B, 6"
12. TOPSOIL EXCAVATION AND PLACEMENT (6")
13. TOPSOIL FURNISH AND PLACE, 30"
14. SEEDING (SEE NOTE 2)
15. PORTLAND CEMENT CONCRETE SHOULDERS 7"

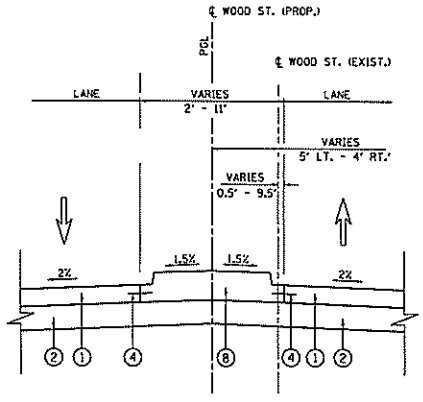

PAVED MEDIAN SECTION

- STA. 208+02.42 TO 209+16
- STA. 209+52.67 TO 209+60.63
- STA. 216+09.20 TO 216+18.57
- STA. 216+39.95 TO 216+49.32

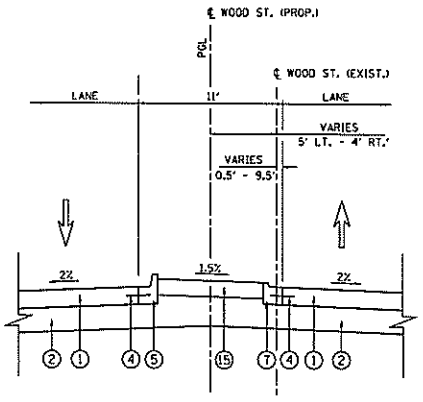

TYPICAL RAILROAD PULLOUTS MEDIAN SECTION

STA. 209+60.63 TO 210+27.54
STA. 215+39.33 TO 216+09.20 (MIRROR IMAGE OF)
STA. 216+49.32 TO 217+18.84

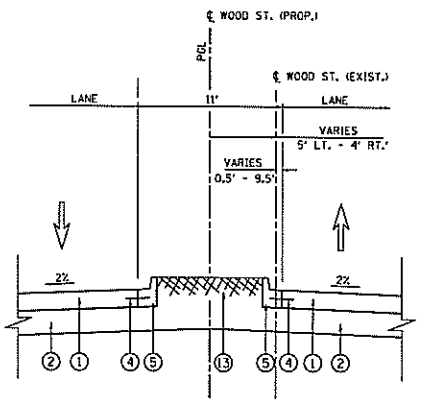

TYPICAL LANDSCAPE MEDIAN SECTION

STA. 210+27.54 TO 215+39.33
STA. 217+18.84 TO 222+16.60

NOTES

1. VARIABLE DEPTH AGGREGATE UNDER PORTLAND CEMENT CONCRETE SHOULDERS 7" WILL BE PAID AS AGGREGATE SUBGRADE IMPROVEMENT 12".

TS-1

INFRASTRUCTURE ENGINEERING

USER NAME = MPetersen	DESIGNED - AJP	REVISED -	
	DRAWN - JC	REVISED -	
PLOT SCALE = 0.0000 '/ IN.	CHECKED - RB	REVISED -	
PLOT DATE = 06/19/2015	DATE - 06/12/2015	REVISED -	

STATE OF ILLINOIS
DEPARTMENT OF TRANSPORTATION

PROPOSED TYPICAL SECTIONS
WOOD STREET/ASHLAND AVENUE

SCALE: N.T.S. | SHEET 5 OF 8 SHEETS | STA. 000+00 TO STA. 000+00

F.A.U. RTE.	SECTION	COUNTY	TOTAL SHEETS	SHEET NO.
2957	(145,146&146S-2)WRS&B-1	COOK	146	9
		CONTRACT NO. 60Y72		
	ILLINOIS FED. AID PROJECT			

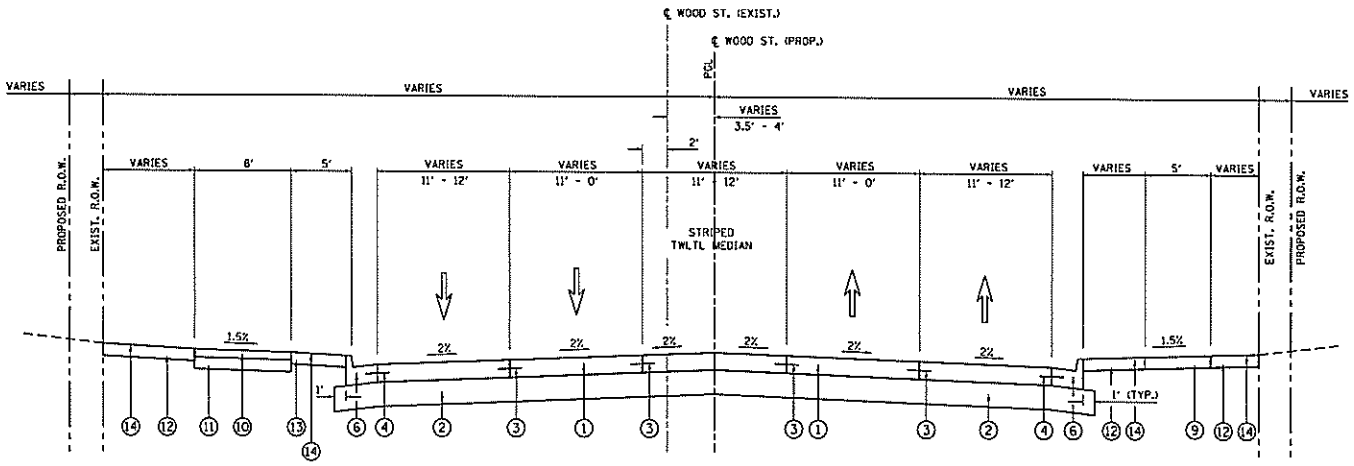

PROPOSED WOOD STREET

STA. 235+50 TO 240+06.06 (TRANSITION FROM PROP. 5 LANES TO PROP. 3 LANES)

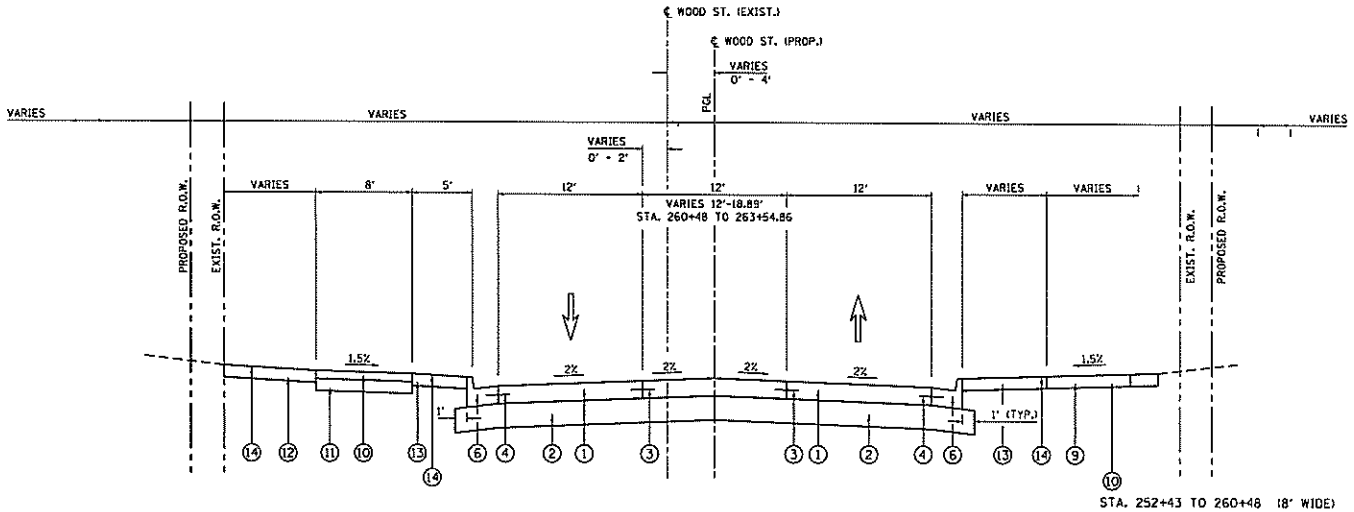

STA. 252+43 TO 260+48 (8' WIDE)

PROPOSED WOOD STREET

STA. 240+00.06 TO 264+36.68
(BRIDGE OMISSION)
STA. 267+19.69 TO 267+19.69

PROPOSED LEGEND: WOOD STREET

1. PORTLAND CEMENT CONCRETE PAVEMENT, 8 3/4" (JOINTED)
2. AGGREGATE SUBGRADE IMPROVEMENT 12"
3. LONGITUDINAL CONSTRUCTION JOINT DRILLED AND GROUTED IN PLACE, NO. 6 TIE BAR AT 24" LONG, DEFORMED (EPOXY COATED) AT 24"CTS. (INCLUDED IN THE COST OF THE PROPOSED PAVEMENT)
4. NO. 6 TIE BAR AT 24" LONG, DEFORMED (EPOXY COATED) AT 24" CTS. (INCLUDED IN THE COST OF THE PROPOSED CURB AND GUTTER)
5. COMBINATION CONCRETE CURB & GUTTER, TYPE B-6.12
6. COMBINATION CONCRETE CURB & GUTTER, TYPE B-6.24
7. COMBINATION CONCRETE CURB & GUTTER, TYPE M-2.12
8. CONCRETE MEDIAN, TYPE SB-6.24
9. SIDEWALK, PORTLAND CEMENT CONCRETE SIDEWALK, 5" (SEE NOTE ....
10. HOT-MIX ASPHALT SHARED-USE PATH (SEE NOTES ...
11. SUB-BASE GRANULAR MATERIAL, TYPE B, 6"
12. TOPSOIL EXCAVATION AND PLACEMENT (6")
13. TOPSOIL FURNISH AND PLACE, 30"
14. SEEDING (SEE NOTE 2)
15. PORTLAND CEMENT CONCRETE SHOULDERS 7"

TS-2

INFRASTRUCTURE ENGINEERING

USER NAME = MPatterson	DESIGNED - AJP	REVISED -	
	DRAWN - JC	REVISED -	
PLOT SCALE = 5.0000 ' / in.	CHECKED - RB	REVISED -	
PLOT DATE = 10/19/2015	DATE - 08/12/2015	REVISED -	

STATE OF ILLINOIS
DEPARTMENT OF TRANSPORTATION

PROPOSED TYPICAL SECTIONS
WOOD STREET/ASHLAND AVENUE

SCALE: NTS | SHEET 6 OF 8 SHEETS | STA. 000+00 | TO STA. 000+00

F.A.U. RTE.	SECTION	COUNTY	TOTAL SHEETS	SHEET NO.
2857	1145,1461,1465-21WRS&B-1	COOK	146	10

CONTRACT NO. 60Y72
ILLINOIS FED. AID PROJECT

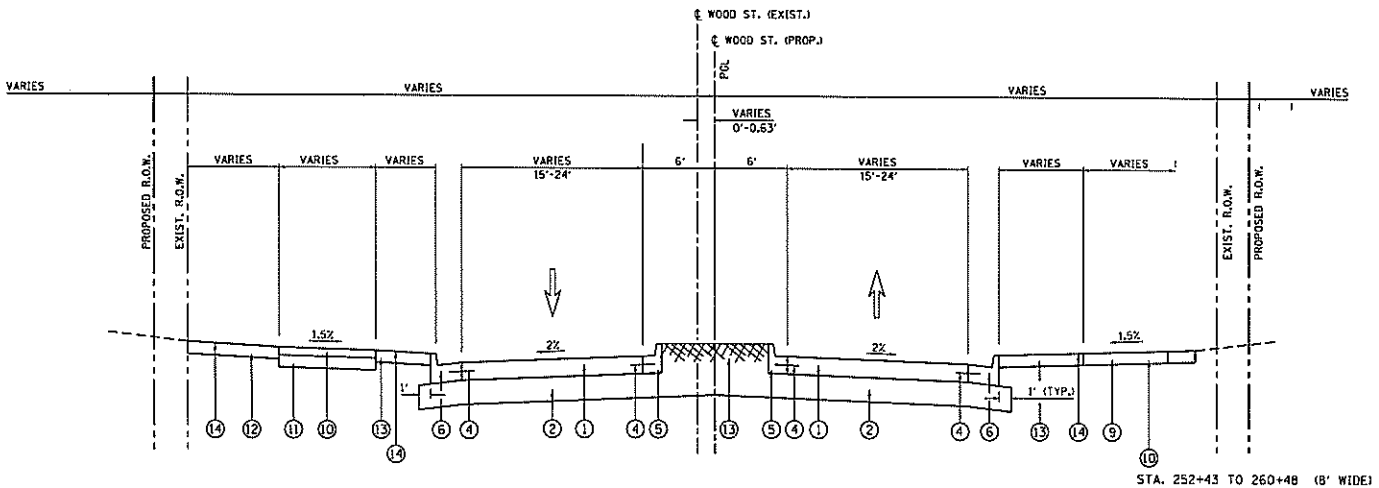

STA. 252+43 TO 260+48 (8' WIDE)

PROPOSED LEGEND: WOOD STREET

1. PORTLAND CEMENT CONCRETE PAVEMENT, 8 3/4" (JOINTED)
2. AGGREGATE SUBGRADE IMPROVEMENT 12"
3. LONGITUDINAL CONSTRUCTION JOINT DRILLED AND GROUTED IN PLACE, NO. 6 TIE BAR AT 24" LONG, DEFORMED (EPOXY COATED) AT 24"CTS. (INCLUDED IN THE COST OF THE PROPOSED PAVEMENT)
4. NO. 6 TIE BAR AT 24" LONG, DEFORMED (EPOXY COATED) AT 24" CTS. (INCLUDED IN THE COST OF THE PROPOSED CURB AND GUTTER)
5. COMBINATION CONCRETE CURB & GUTTER, TYPE B-6.12
6. COMBINATION CONCRETE CURB & GUTTER, TYPE B-6.24
7. COMBINATION CONCRETE CURB & GUTTER, TYPE M-2.12
8. CONCRETE MEDIAN, TYPE SB-6.24
9. SIDEWALK, PORTLAND CEMENT CONCRETE SIDEWALK, 5" (SEE NOTE ....
10. HOT-MIX ASPHALT SHARED-USE PATH (SEE NOTES ...
11. SUB-BASE GRANULAR MATERIAL, TYPE B, 6"
12. TOPSOIL EXCAVATION AND PLACEMENT (6")
13. TOPSOIL FURNISH AND PLACE, 30"
14. SEEDING (SEE NOTE 2)
15. PORTLAND CEMENT CONCRETE SHOULDERS 7"
16. PORTLAND CEMENT CONCRETE PAVEMENT, 8" (JOINTED)

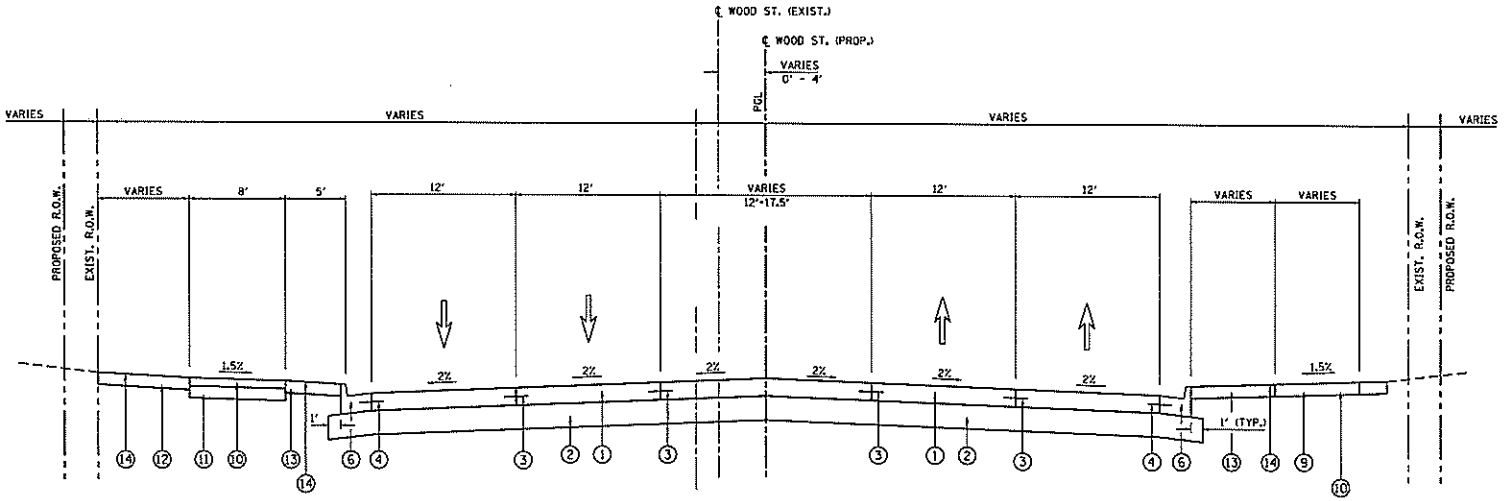

STA. 252+43 TO 260+48 (8' WIDE)

TS-3

INFRASTRUCTURE ENGINEERING

USER NAME = MPatterson	DESIGNED - AJP		REVISED -
	DRAWN - JC		REVISED -
PLOT SCALE = 0.0000 '/ in.	CHECKED - RB		REVISED -
PLOT DATE = 10/15/2015	DATE - 05/12/2015		REVISED -

STATE OF ILLINOIS
DEPARTMENT OF TRANSPORTATION

PROPOSED TYPICAL SECTIONS
WOOD STREET/ASHLAND AVENUE

SCALE: NTS | SHEET 7 OF 8 SHEETS | STA. 000+00 TO STA. 000+00

F.A.U. RTE.	SECTION	COUNTY	TOTAL SHEETS	SHEET NO.
2857	(145,146&146S-2)WRS&B-)	COOK	146	11

CONTRACT NO. 60Y72

ILLINOIS FED. AID PROJECT

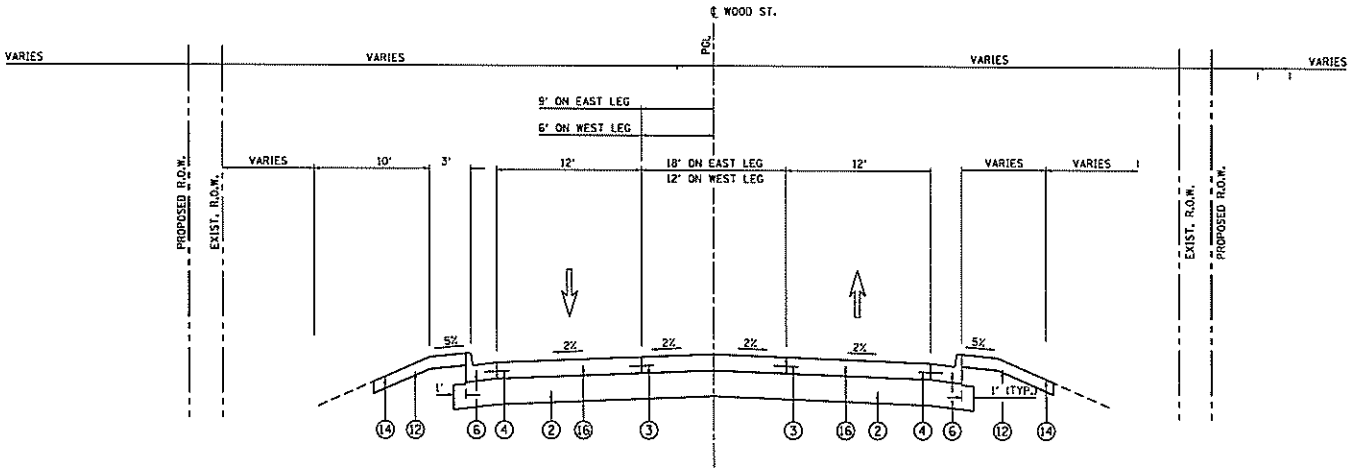

PROPOSED THORNTON ROAD

STA. 95+00 TO 104+50

PROPOSED LEGEND: WOOD STREET

1. PORTLAND CEMENT CONCRETE PAVEMENT, 8 3/4" (JOINTED)
2. AGGREGATE SUBGRADE IMPROVEMENT 12"
3. LONGITUDINAL CONSTRUCTION JOINT DRILLED AND GROUTED IN PLACE, NO. 6 TIE BAR AT 24" LONG, DEFORMED (EPOXY COATED) AT 24"CTS. (INCLUDED IN THE COST OF THE PROPOSED PAVEMENT)
4. NO. 6 TIE BAR AT 24" LONG, DEFORMED (EPOXY COATED) AT 24" CTS. (INCLUDED IN THE COST OF THE PROPOSED CURB AND GUTTER)
5. COMBINATION CONCRETE CURB & GUTTER, TYPE B-6.12
6. COMBINATION CONCRETE CURB & GUTTER, TYPE B-6.24
7. COMBINATION CONCRETE CURB & GUTTER, TYPE M-2.12
8. CONCRETE MEDIAN, TYPE SB-6.24
9. SIDEWALK, PORTLAND CEMENT CONCRETE SIDEWALK, 5" (SEE NOTE ....
10. HOT-MIX ASPHALT SHARED-USE PATH (SEE NOTES ...
11. SUB-BASE GRANULAR MATERIAL, TYPE B, 6"
12. TOPSOIL EXCAVATION AND PLACEMENT (6")
13. TOPSOIL FURNISH AND PLACE, 30"
14. SEEDING (SEE NOTE 2)
15. PORTLAND CEMENT CONCRETE SHOULDERS 7"
16. PORTLAND CEMENT CONCRETE PAVEMENT, 8" (JOINTED)

TS-4

INFRASTRUCTURE ENGINEERING	USER NAME = APatterson	DESIGNED - AJP	REVISED -	STATE OF ILLINOIS DEPARTMENT OF TRANSPORTATION	PROPOSED TYPICAL SECTIONS WOOD STREET/ASHLAND AVENUE	F.A.U. RTE.	SECTION	COUNTY	TOTAL SHEETS	SHEET NO.
		DRAWN - JC	REVISED -			2857	(145,146&146S-2)WRS&B-1	COOK	146	12
	PLOT SCALE = 5.0000 ' / in.	CHECKED - RB	REVISED -			CONTRACT NO. 60Y72				
	PLOT DATE = 10/19/2015	DATE - 08/12/2015	REVISED -		SCALE: NTS / SHEET 8 OF 8 SHEETS / STA. 000+00 TO STA. 000+00	ILLINOIS FED. AID PROJECT				