Benchmark: 4683-1, Stamped disk on south end of east headwall of S.N. 010-2010; Sta. 145+74.31, 15.17' Rt., Elev. 732.56

Existing Structure: S.N. 010-2010 has an estimated construction date of 1933. The 10'x11' Triple Barrel CIP Culvert is 32'-6" o.-o. headwalls and 35'-3" face - face of exterior sidewalls. Structure to be removed and replaced using stage construction, maintaining one lane of traffic at all times.

Salvage: None

Driven Soldier Piles Number, Size & Spacing to be determined in final design, typical each end

APPROVED

DEC. 23 2015

AS A BASIS FOR PREPARATION OF DETAILED PLANS

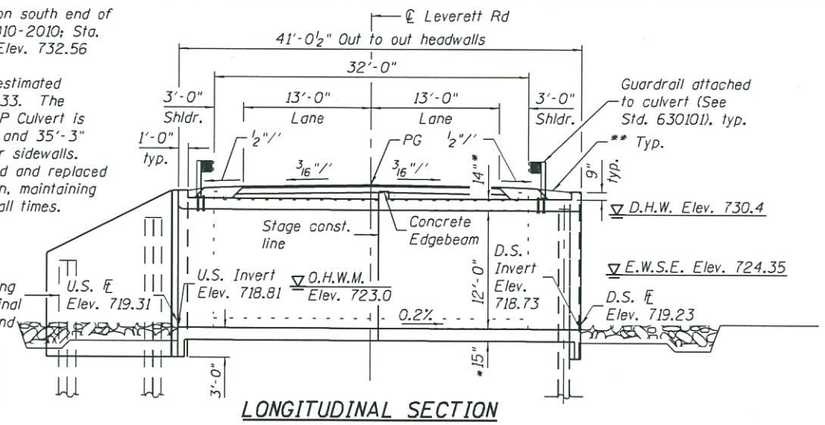


LONGITUDINAL SECTION

** 1:2 (V:H) max. and varies.

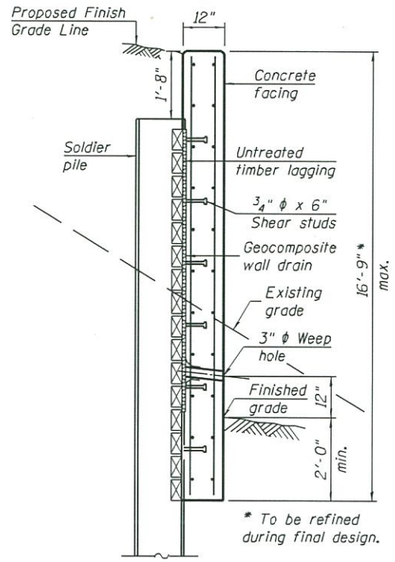


SECTION B-B

## WATERWAY INFORMATION

Drainage Area = 8.3 sq. mi.

Exist. Low Grade Elev. 732.6 @ Sta. 147+00
Prop. Low Grade Elev. 732.6 @ Sta. 148+00

| Flood | Freq. Yr. | Q C.F.S. | Opening Sq. Ft. Exist. | Opening Sq. Ft. Prop. | Nat. H.W.E. | Head - Ft. Exist. | Head - Ft. Prop. | Headwater El. Exist. | Headwater El. Prop. |
|---|---|---|---|---|---|---|---|---|---|
| | 10 | 1280 | 282 | 385 | 730.0 | 0.8 | 0.7 | 730.8 | 730.7 |
| Design | 30 | 1846 | 294 | 399 | 730.4 | 1.5 | 1.2 | 731.9 | 731.6 |
| Base | 100 | 2480 | 306 | 414 | 730.8 | 2.5 | 2.1 | 733.3 | 732.9 |
| Overtop Exist. | 45 | 2055 | 297 | | 730.5 | 2.1 | | 732.6 | |
| Overtop Prop. | 80 | 2367 | | 410 | 730.7 | | 2.0 | | 732.7 |

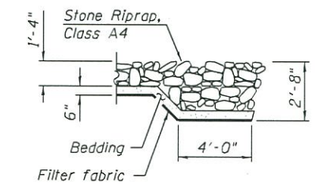


SECTION A-A

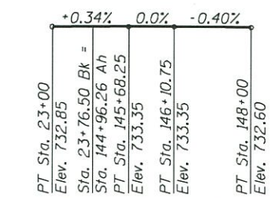


PROFILE GRADE

Along ℄ Roadway

## HIGHWAY CLASSIFICATION

FAS Route 502 (Leverett Road)
Functional Class: Major Collector
ADT: 3150 (2012); 3800 (2032)
DHV: 330 (2032)
ADTT: 318 (2012); 384 (2032)
Design Speed: 60mph
Posted Speed: 55mph

## LOADING HL-93

Allow 50#/sq. ft. for future wearing surface.

## DESIGN SPECIFICATIONS

2014 AASHTO LRFD Bridge Design Specifications, 7th Edition with 2015 Interims

## DESIGN STRESSES

FIELD UNITS

f'c = 3,500 psi
fy = 60,000 psi (Reinforcement)

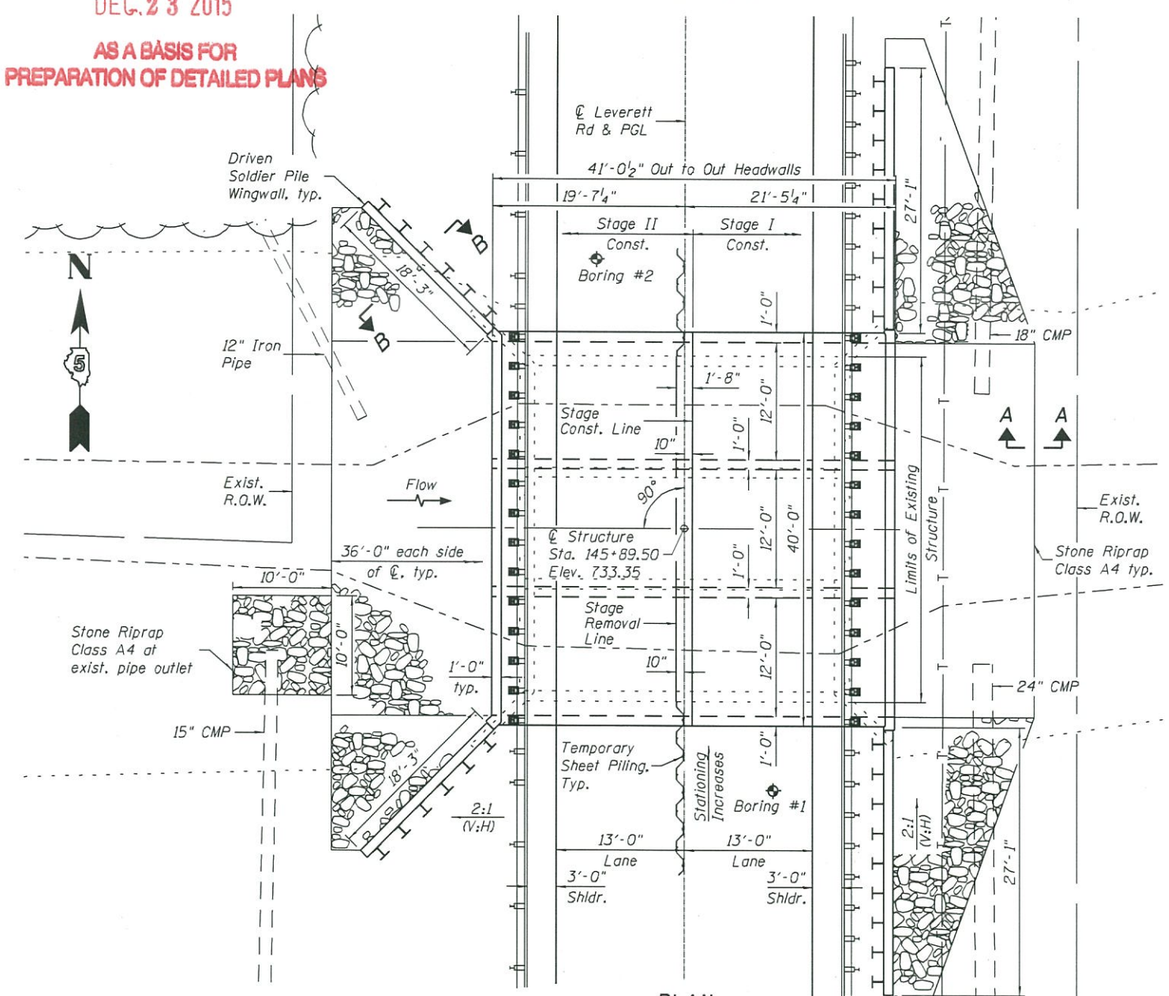


PLAN

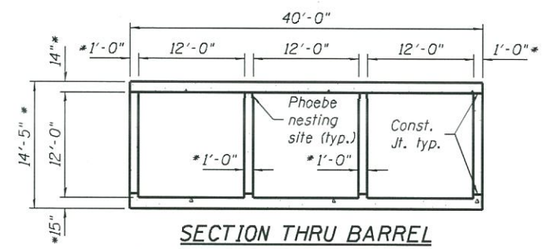


SECTION THRU BARREL

* Slab thickness may be refined in final design.

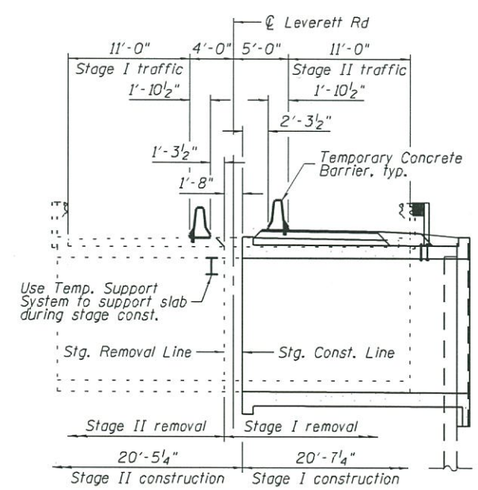


STAGE CONSTRUCTION SKETCH

(Looking North)

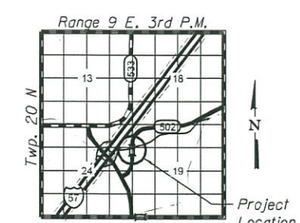


LOCATION SKETCH

GENERAL PLAN & ELEVATION
LEVERETT ROAD OVER
TRIBUTARY OF SALINE BRANCH
F.A.S. RTE. 502 - SEC. 106BR-1(1)
CHAMPAIGN COUNTY
STATION 145+89.50
STRUCTURE NO. 010-2037

PRINT DATE: 12/22/2015 2:30:34 PM Y:\10053.04 IDOT D5 Leverett Road\DGN\Bridge\prelim\Plotsheets\010-2037 TSL.dgn


EFK•Moen, LLC
Civil Engineering Design
303 Fountains Parkway, Suite 240
Fairview Heights, IL 62208
Phone 618-206-4250


| | | | |
|---|---|---|---|
| USER NAME = jg | DESIGNED - CDL | REVISED - | |
| | CHECKED - CTW | REVISED - | |
| PLOT SCALE = 0:2 '1' / in. | DRAWN - JAA | REVISED - | |
| PLOT DATE = 12/22/2015 | DATE - 12/22/2015 | REVISED - | |

STATE OF ILLINOIS
DEPARTMENT OF TRANSPORTATION

SHEET NO. 1 OF 1 SHEETS

| F.A.S. RTE. | SECTION | COUNTY | TOTAL SHEETS | SHEET NO. |
|---|---|---|---|---|
| 502 | 106BR-1(1) | CHAMPAIGN | - | |

CONTRACT NO. 70278

ILLINOIS FED. AID PROJECT