Bench Mark: TBM #19 (ELEV. 638.00)-Square cut on top of barrier wall by light pole (FC13) mile marker 80.40 on North side WB I-90 just East of Canfield.

Existing Structure: Existing structure constructed in 1959, is a T-type cast-in-place retaining wall on a spread footing. The retaining wall is approximately 595 feet long with a max. exposed height of 13'-3". A chain link fence is mounted on top of the wall. Top portion of wall will be removed and a Moment Slab and associated noise wall will be constructed in separate contracts. Existing wall to remain. Traffic will be maintained in westbound direction during construction. Eastbound Higgins Rd. traffic will be detoured according to Detour Plan.

Salvage - None

LOADING

Allow 35 psf wind load for Structure Mounted Noise Wall (see Special Provision)
Maximum Dead Load not to exceed 55 psf of wall face area.
Traffic Impact per AASHTO LRFD Bridge Specifications
Approx. Noise Wall Height = 17'-0"

HIGHWAY CLASSIFICATION

F.A.I Rte. - Higgins Road (S.R. 72)
Functional Class: Major Collector
ADT: 19,800 (2013)
ADTT: 1,200 (2013)
Speed: 30 m.p.h (posted)

DESIGN SPECIFICATIONS

AASHTO LRFD Bridge Design Specifications, 7th Edition (2014) with 2015 Interim Revisions

DESIGN STRESSES

New Construction
f'c = 4,000 psi (Superstructure Concrete)
f'c = 3,500 psi
fy = 60,000 psi (Reinforcement)
Existing Construction
fc = 800 psi
fs = 20,000 psi (Reinforcement)

APPROVED
JUN 22 2016
AS A BASIS FOR PREPARATION OF DETAILED PLANS

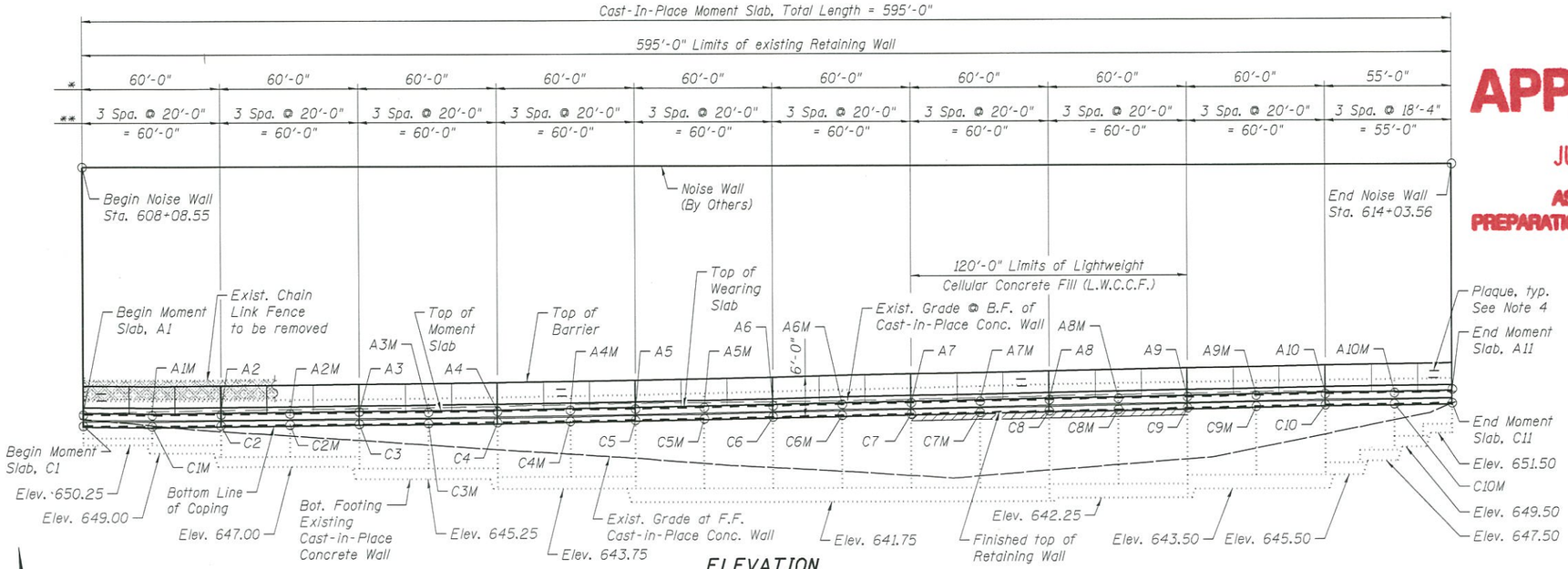

ELEVATION
(Looking North)

PLAQUE __
MOMENT SLAB AREA
DO NOT OPEN-CUT
ROADWAY FROM
PLAQUE 1 TO PLAQUE 4

PLAQUE

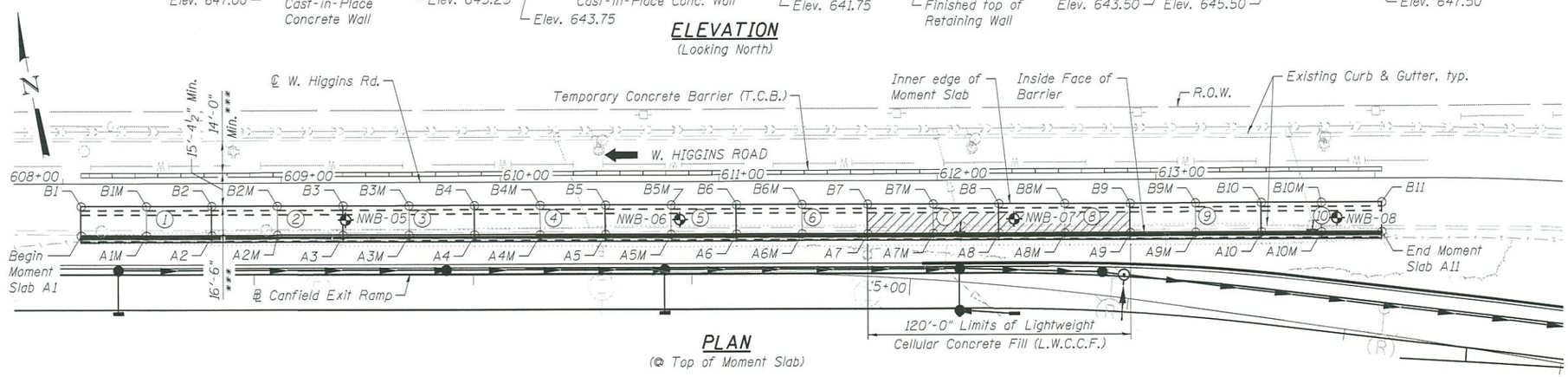

PLAN
(@ Top of Moment Slab)

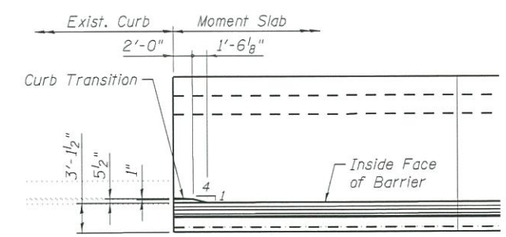

CURB TRANSITION I
(Moment Slab Segment 1)

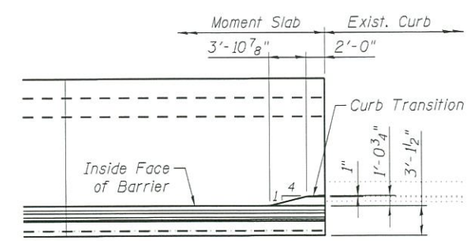

CURB TRANSITION II
(Moment Slab Segment 10)

LEGEND:

- Limits of L.W.C.C.F.
- Exist. Electrical Line
- Exist. Fence
- Exist. Gas Line
- Exist. Storm Sewer
- Exist. Water Line
- Prop. Storm Sewer
- Boring Location
- Proposed Catch Basin
- Exist. Catch Basin (to remain)
- Proposed Inlet
- Moment Slab Segment Number
- Temporary Travel Lane
- Exist. Light Pole

NOTES:

1. Horizontal dimensions measured along front face (I-90 side) of Existing Retaining Wall U.N.O.
2. Stations & offsets are given to front face (I-90 side) of Existing Retaining Wall relative to ℄ W. Higgins Road.
3. Stations, offsets & elevations for control points are provided on Sheet 2.
4. Provide Plaque on inside face (W. Higgins Road side) of Barrier, at every 200' (or less).

*Expansion Joint Spacing in Barrier and Moment Slab (along front face (I-90 side) of Existing Retaining Wall)
**Construction Joint Spacing in Barrier
***Subject to refinement during final design

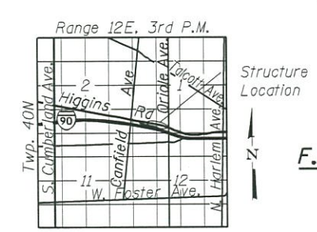

LOCATION SKETCH

GENERAL PLAN AND ELEVATION
W. HIGGINS ROAD
F.A.P. RTE. I-90 - SEC. (1517 & 1415) R-2
COOK COUNTY
STA. 608+08.55 TO STA. 614+03.56
STRUCTURE NO. 016-2294

MODEL: $MODELNAME$
D:\58015-sht-NW5_3-TSL01_GP&E.dgn

RME Rubinos & Mesia Engineers, Inc.
200 S. Michigan Avenue, Suite 1500, Chicago, IL 60604-2482

USER NAME = PHodina	DESIGNED - EV	REVISED -	
	CHECKED - PAH	REVISED -	
PLOT SCALE =	DRAWN - EV	REVISED -	
PLOT DATE = 3/28/2016	CHECKED - PAH	REVISED -	

STATE OF ILLINOIS
DEPARTMENT OF TRANSPORTATION

GENERAL PLAN AND ELEVATION
EX WB-D MOMENT SLAB
SHEET NO. 1 OF 2 SHEETS

F.A.I. RTE.	SECTION	COUNTY	TOTAL SHEETS	SHEET NO.
I-90		COOK	2	1

ILLINOIS FED. AID PROJECT

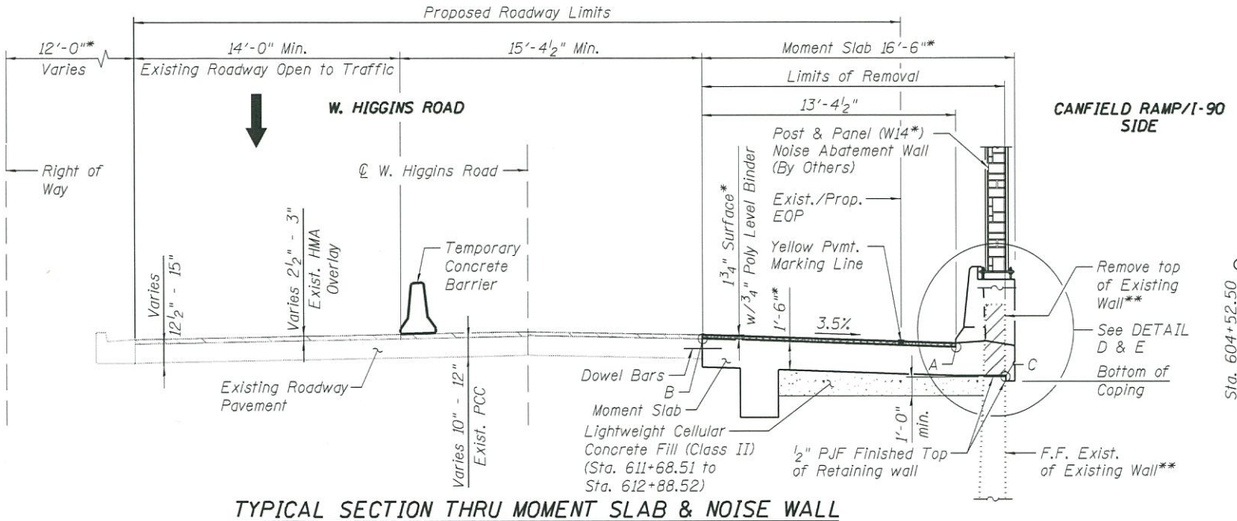

TYPICAL SECTION THRU MOMENT SLAB & NOISE WALL

(Looking East)

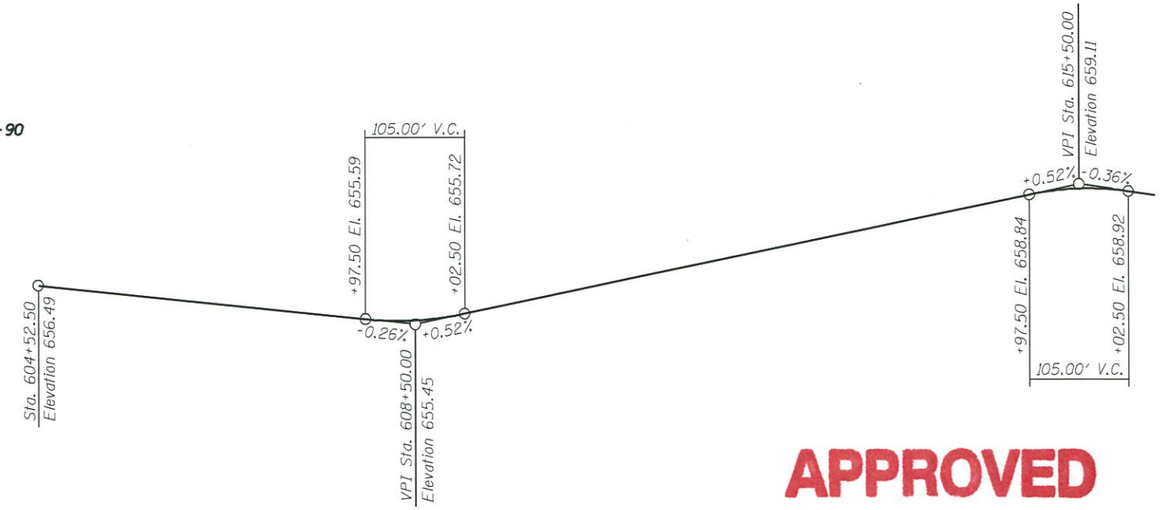

PROFILE GRADE

(℄ W. Higgins Rd.)

APPROVED

JUN 22 2016

AS A BASIS FOR PREPARATION OF DETAILED PLANS

A Stations, offsets and elevations for Inside Face of Barrier are provided w.r.t. this point, see Plan & Elevation views.

B Stations and offsets for inner edge of Moment Slab are provided w.r.t this point, see Plan view.

C Stations and elevations for finished top of Retaining Wall are provided w.r.t. this point, see Elevation view.

LEGEND

Temporary Travel Lanes

Existing Structure Removal

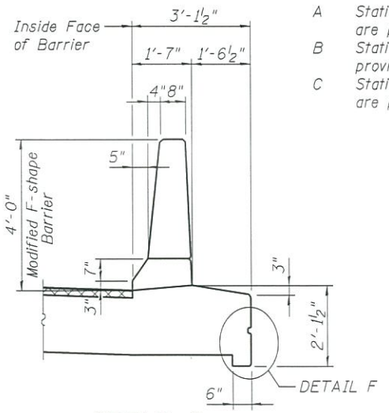

DETAIL D

(Looking East)

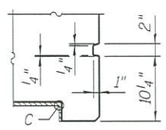

DETAIL F

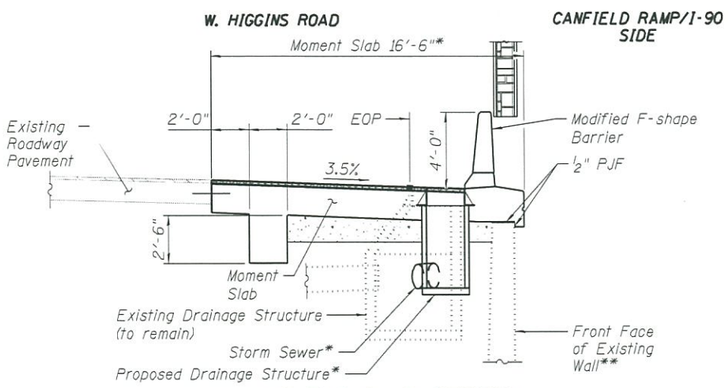

MOMENT SLAB SECTION

(Looking East @ Catch Basin Location)

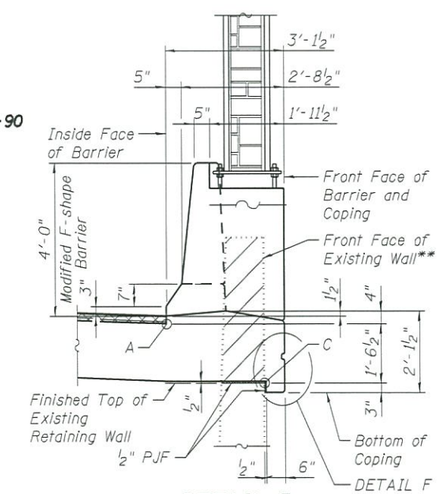

DETAIL E

(Looking East @ Noise Wall Post)

GEOMETRIC CONTROL POINTS STATIONS, OFFSETS & ELEVATIONS

INSIDE FACE OF BARRIER (A)

Location	Station	Offset (' RT)	Elevation
A1	608+08.55	23.76	654.59
A1M	608+38.55	23.79	654.51
A2	608+68.54	23.83	654.60
A2M	608+98.53	23.86	654.69
A3	609+28.53	23.89	654.78
A3M	609+58.52	23.92	654.88
A4	609+88.52	23.95	655.00
A4M	610+20.27	23.98	655.13
A5	610+48.52	24.01	655.27
A5M	610+78.51	24.04	655.48
A6	611+08.51	24.07	655.69
A6M	611+38.51	24.10	655.90
A7	611+68.51	24.13	656.09
A7M	611+98.51	24.17	656.28
A8	612+28.51	24.20	656.46
A8M	612+58.51	24.23	656.65
A9	612+88.52	24.26	656.84
A9M	613+18.52	24.29	657.02
A10	613+48.52	24.32	657.20
A10M	613+78.55	24.35	657.31
A11	614+03.56	24.38	657.40

INNER EDGE OF MOMENT SLAB (B)

Location	Station	Offset (' RT)	Elevation
B1	608+08.57	10.38	655.06
B1M	608+38.57	10.41	654.98
B2	608+68.56	10.45	655.07
B2M	608+98.55	10.48	655.16
B3	609+28.55	10.51	655.25
B3M	609+58.54	10.54	655.35
B4	609+88.54	10.57	655.47
B4M	610+20.29	10.60	655.60
B5	610+48.54	10.63	655.74
B5M	610+78.53	10.66	655.95
B6	611+08.53	10.69	656.16
B6M	611+38.53	10.72	656.37
B7	611+68.53	10.75	656.56
B7M	611+98.53	10.79	656.74
B8	612+28.53	10.82	656.93
B8M	612+58.53	10.85	657.12
B9	612+88.54	10.88	657.30
B9M	613+18.54	10.91	657.49
B10	613+48.54	10.94	657.67
B10M	613+78.57	10.97	657.78
B11	614+03.58	11.00	657.87

FINISHED TOP OF RETAINING WALL (C)

Location	Station	Offset (' RT)	Elevation
C1	608+08.55	26.38	653.05
C1M	608+38.55	26.41	652.97
C2	608+68.54	26.45	653.06
C2M	608+98.53	26.48	653.15
C3	609+28.53	26.51	653.24
C3M	609+58.52	26.54	653.34
C4	609+88.52	26.57	653.46
C4M	610+20.27	26.60	653.59
C5	610+48.52	26.63	653.73
C5M	610+78.51	26.66	653.94
C6	611+08.51	26.69	654.15
C6M	611+38.51	26.72	654.36
C7	611+68.51	26.75	654.55
C7M	611+98.51	26.79	654.73
C8	612+28.51	26.82	654.92
C8M	612+58.51	26.85	655.11
C9	612+88.52	26.88	655.30
C9M	613+18.52	26.91	655.48
C10	613+48.52	26.94	655.66
C10M	613+78.55	26.97	655.77
C11	614+03.56	27.00	655.86

Notes:

* Subject to refinement during final design.

** Remove top portion of existing Retaining Wall to the elevations shown on this sheet.

1. Stations and offsets are provided with respect to (w.r.t.) ℄ W. Higgins Rd.
2. See TYPICAL SECTION THRU MOMENT SLAB & NOISE WALL for location of Geometric Control Points.
3. Spacing of pilasters and layout of noise wall post anchors to be determined during final design.

MODEL: $MODELNAME$
D158015-sht-NW5.3_TSL02_Details.dgn

RME Rubincs & Mesia Engineers, Inc. 200 S. Michigan Avenue, Suite 1500, Chicago, IL 60604-2482

USER NAME = PHodina	DESIGNED - EV	REVISED -	
	CHECKED - PAH	REVISED -	
PLOT SCALE =	DRAWN - EV	REVISED -	
PLOT DATE = 3/28/2016	CHECKED - PAH	REVISED -	

STATE OF ILLINOIS
DEPARTMENT OF TRANSPORTATION

SECTIONS AND DETAILS
EX WB-D MOMENT SLAB

SHEET NO. 2 OF 2 SHEETS

F.A.I. RTE.	SECTION	COUNTY	TOTAL SHEETS	SHEET NO.
I-90		COOK	2	2

ILLINOIS FED. AID PROJECT