Benchmark:
Square cut in the top of the northwest corner of the headwall in the southeast quadrant of the intersection of Rte 68 and Lee Street. Elev. 646.61

Existing Structure:
S.N.016-0813, built in 1938. Existing Structure is a double 8'x11.5' reinforced concrete box culvert which is to be removed and replaced with a new concrete box structure. The east leg of IL 68 and the north leg Lee St. will be successively closed to traffic.

No Salvage

**APPROVED**
AUG 31 2015
AS A BASIS FOR PREPARATION OF DETAILED PLANS

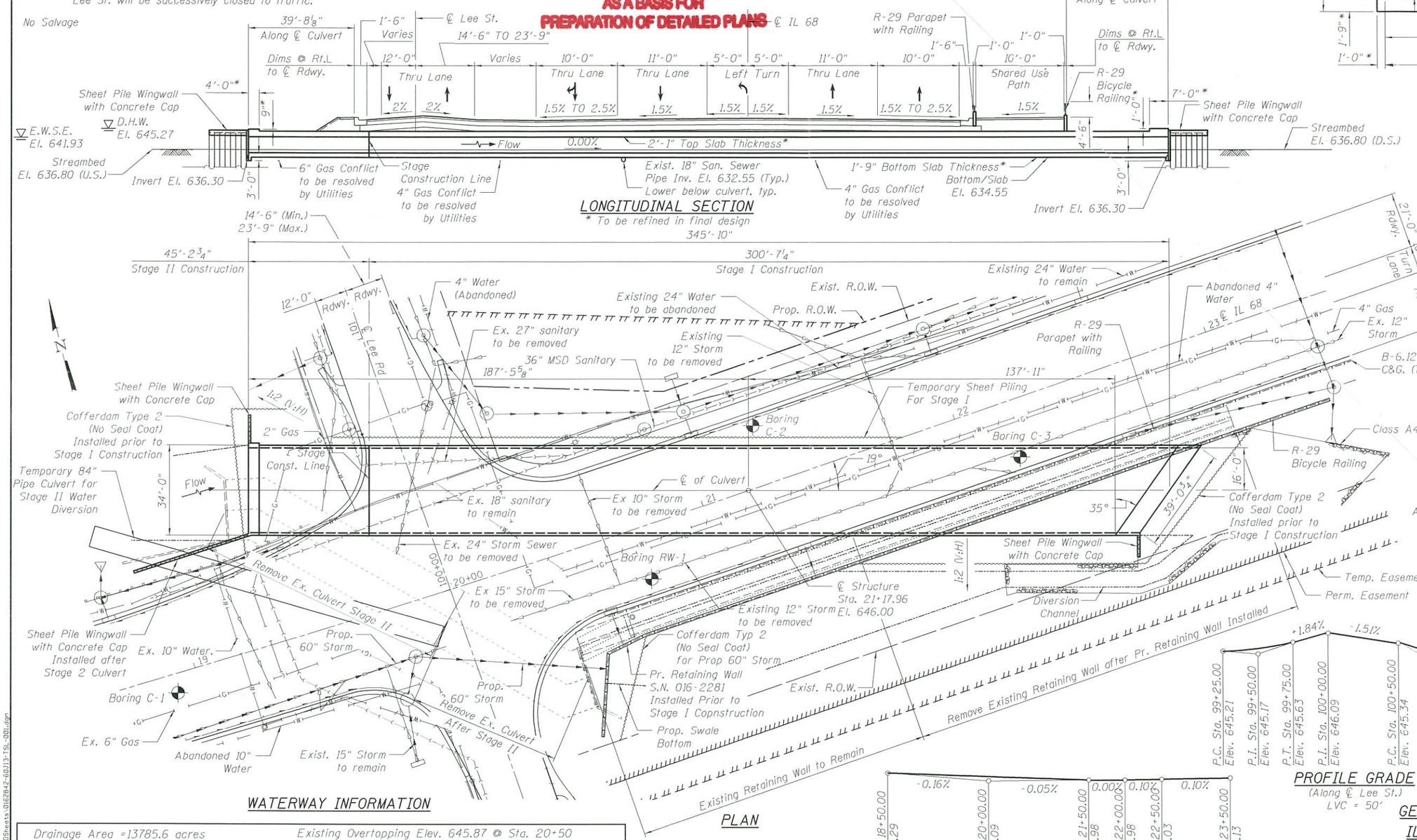


## PLAN

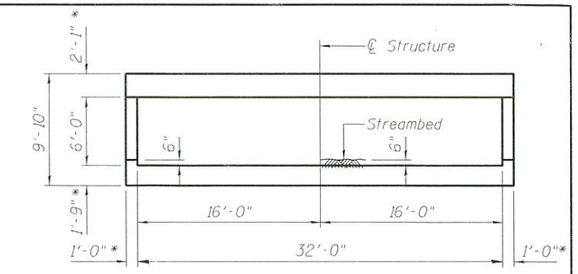


## SECTION THRU BARREL

( @ Rt. L's to ℄ Structure)
* To be refined in final design

## LONGITUDINAL SECTION

* To be refined in final design

## HIGHWAY CLASSIFICATION

F.A.P. Rte. 343 - IL. Rte. 68
Functional Class: Other Principal Arterial
ADT: 30,300 (2008); 31,000 (2030)
ADTT: 910 (2008); 930 (2030)
DHV: 3,190 (2030)
Design Speed: 50 m.p.h.
Posted Speed: 45 m.p.h.

Lee Street
Functional Class: Major Collector
ADT: 1,150 (2010)
ADTT: N/A
DHV: N/A
Design Speed: 30 m.p.h.
Posted Speed: 30 m.p.h.

## DESIGN STRESSES

### FIELD UNITS

f'c = 3,500 psi
fy = 60,000 psi (Reinforcement)

## LOADING HL-93

Allow 50#/sq. ft. for future wearing surface

## DESIGN SPECIFICATIONS

2014 AASHTO LRFD Bridge Design Specifications, 7th Edition

## PROFILE GRADE

(Along ℄ Lee St.)
LVC = 50'

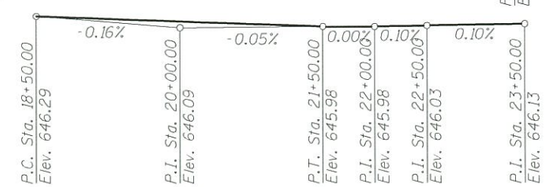


## PROFILE GRADE

(Along ℄ IL 68)
LVC = 300'

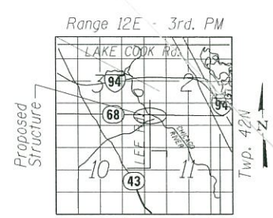


## LOCATION SKETCH

## WATERWAY INFORMATION

Drainage Area =13785.6 acres
21.5400 sq.mi.

Existing Overtopping Elev. 645.87 @ Sta. 20+50
Proposed Overtopping Elev. 645.98 @ Sta. 21+50

| Flood | Freq. Yr. | Discharge C.F.S. | Opening Sq. Ft. Exist. | Opening Sq. Ft. Prop. | Nat. H.W.E. | Created Head-(Ft.) Exist. | Created Head-(Ft.) Prop. | Headwater Elev. Exist. | Headwater Elev. Prop. |
|---|---|---|---|---|---|---|---|---|---|
| | 10 | 449.00 | 157.1 | 176.0 | 644.51 | 0.13 | 0.06 | 644.64 | 644.57 |
| Design (Overtopping) | 50 | 734.00 | 157.1 | 176.0 | 645.43 | 0.17 | 0.14 | 645.60 | 645.57 |
| Base | 100 | 870.00 | 157.1 | 176.0 | 645.77 | 0.08 | 0.06 | 645.85 | 645.83 |
| Max. Calc. | 500 | 1473.00 | 157.1 | 176.0 | 646.88 | 0.00 | 0.00 | 646.88 | 646.88 |

Note:
Waterway Information is preliminary and has not been approved. Subject to change.

# GENERAL PLAN & ELEVATION
# IL 68 (DUNDEE ROAD) OVER
# MIDDLE FORK NORTH BRANCH CHICAGO RIVER
# F.A.P. RTE. 343 - SEC 30T-1
# COOK COUNTY
# STATION 21+17.96
# STRUCTURE NO. 016-2842

BLOOM COMPANIES, LLC
Infrastructure Development Digitally
602 W. Fulton Street, Suite 701 ▼ Chicago, IL 60661
Phone: (312) 876-0500 Fax: (312) 876-0630

| | | |
|---|---|---|
| USER NAME = makrent | DESIGNED - BCM/JRS | REVISED |
| | CHECKED - BT | REVISED |
| PLOT SCALE = N/A | DRAWN - TVB | REVISED |
| PLOT DATE = 6/4/2015 | CHECKED - 10/10/2014 | REVISED |

STATE OF ILLINOIS
DEPARTMENT OF TRANSPORTATION

GENERAL PLAN & ELEVATION
STRUCTURE NO. 016-2842
SHEET NO. 1 OF 2 SHEETS

| F.A.P. RTE. | SECTION | COUNTY | TOTAL SHEETS | SHEET NO. |
|---|---|---|---|---|
| 343 | 30T-1 | COOK | 115 | 77 |
| | | CONTRACT NO. 60J13 | | |
| | | ILLINOIS FED. AID PROJECT | | |

FILENAME = F:\3-1296_IL68Cul\DRAWINGS\C4005Sheets\0162842-60J13-TSL-001.dgn

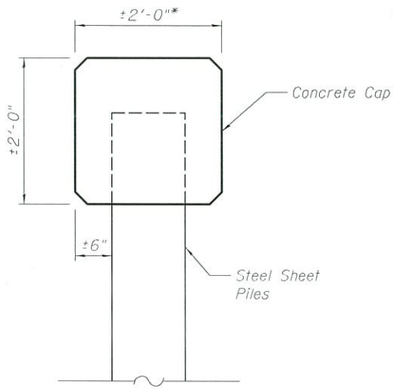


WINGWALL CONCRETE CAP DETAIL

* Subject to the size of the sheet piling

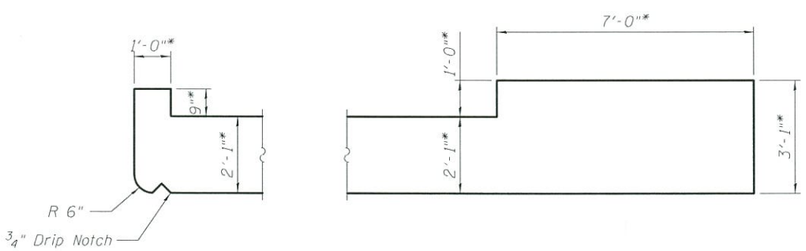


WEST END

EAST END

TOP SLAB HEADWALL DETAIL

* To be refined in final design

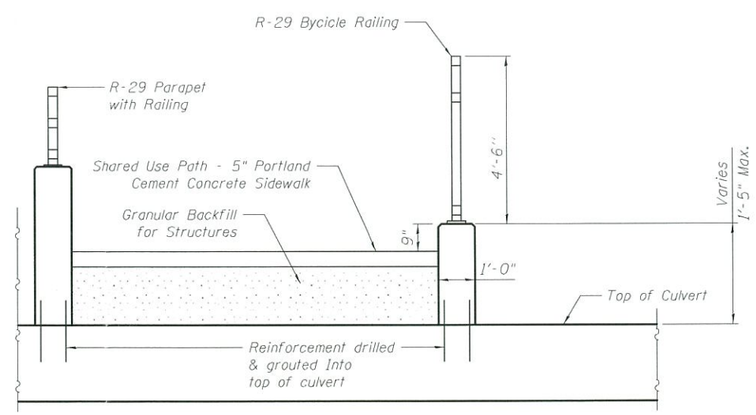


BICYCLE RAILING CONNECTION TO TOP OF CULVERT

APPROVED

AUG 31 2015

AS A BASIS FOR PREPARATION OF DETAILED PLANS

DETAILS
IL 68 (DUNDEE ROAD) OVER
MIDDLE FORK NORTH BRANCH CHICAGO RIVER
F.A.P. RTE. 343 - SEC 30T-1
COOK COUNTY
STATION 21+17.96
STRUCTURE NO. 016-2842

FILENAME = F:\3-1296_IL68Cu\DRAWINGS\CADDSheets\0162842-60J13-TSL-002.dgn

| | | | | | | | | | |
|---|---|---|---|---|---|---|---|---|---|
| BLOOM COMPANIES, LLC Infrastructure Innovation and Ingenuity 600 W. Fulton Street, Suite 701 • Chicago, IL 60661 Phone: (312) 876-3500 Fax: (312) 876-0600 | USER NAME = mokrent | DESIGNED - BCM/JRS | REVISED | STATE OF ILLINOIS DEPARTMENT OF TRANSPORTATION | DETAILS STRUCTURE NO. 016-2842 | F.A.P. RTE. 343 | SECTION 30T-1 | COUNTY COOK | TOTAL SHEETS 115 / SHEET NO. 83 |
| | | CHECKED - BT | REVISED | | | | | CONTRACT NO. 60J13 | |
| | PLOT SCALE = N/A | DRAWN - TVB | REVISED | | | | | | |
| | PLOT DATE = 6/4/2015 | CHECKED - 10/10/2014 | REVISED | | SHEET NO. 2 OF 2 SHEETS | | ILLINOIS FED. AID PROJECT | | |