Benchmark: Top of BM Nail set in north face of power pole at SE quadrant of IL Route 47 and Eakin Creek Bridge. Elev. 906.78.

Existing Structure: The existing structure (SN 045-0231) carrying IL-47 over Eakin Creek was constructed in 1930 under Section 106 as a 9'x9' double cell cast-in-place concrete box culvert. The culvert was rehabilitated in 1967 under Section 106 I, 106(W&RS), 106(W&RS-1). The overall length of the culvert is approximately 77'-0" out to out of headwalls along the skew. The skew of the structure is 54° right forward. All four corners have T-type vertical cantilever wingwalls. One lane of traffic will maintained during staged construction utilizing temporary traffic signal on IL-47.

No Salvage.

Precast alternative is not allowed.

SCOPE OF WORK

1. Install temporary traffic signal and shift traffic to the southbound lane.
2. Install temporary support in existing culvert and install temporary sheet piling at Stage Removal Line outside of culvert walls.
3. Partially remove existing culvert and install temporary sheet piling along the Stage Removal Line through the existing box opening. Cut temporary sheet piling to invert elevation to allow flow.
4. Remove remaining existing culvert, wingwalls and roadway for Stage I Removal.
5. Construct proposed culvert, wingwalls and permanent steel sheet pile wall for Stage I Construction.
6. Shift traffic to the northbound lane for Stage II Construction.
7. Remove existing culvert, wingwalls and roadway for Stage II Removal.
8. Construct proposed culvert, wingwalls and permanent steel sheet pile wall for Stage II Construction.
9. Re-establish the flow through the proposed culvert, remove temporary traffic signal and open the road to the traffic.

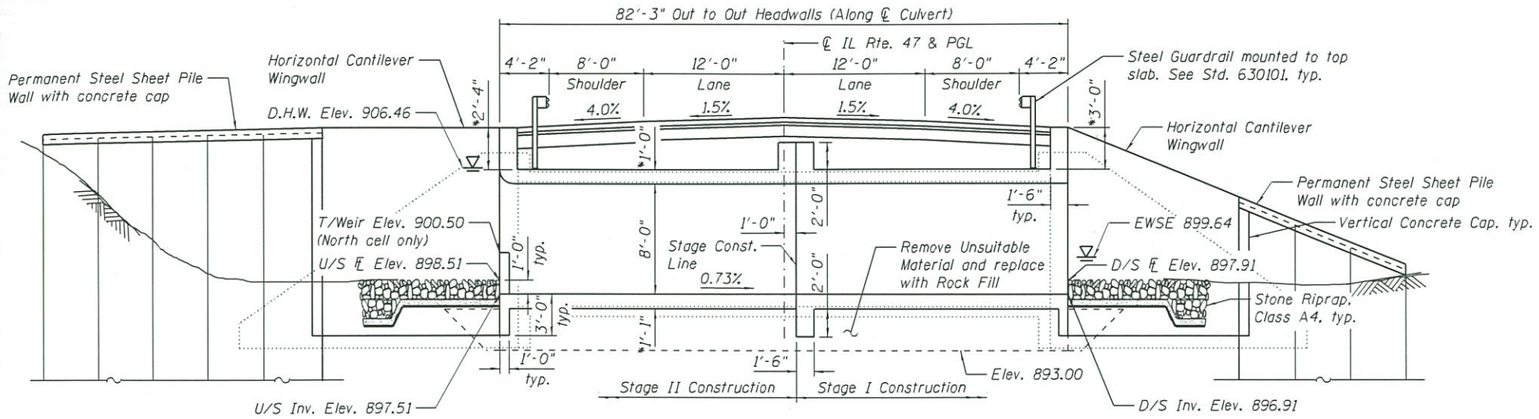

LONGITUDINAL SECTION

* Subject to refinement during final design.

WATERWAY INFORMATION

Drainage Area = 2.71 Sq. Mi.

Existing Overtopping Elev. 908.05 at Sta. 77+50
Proposed Overtopping Elev. 908.05 at Sta. 77+50

Flood	Freq. Yr.	Q C.F.S.	Opening Sq. Ft. Exist.	Opening Sq. Ft. Prop.	Nat. H.W.E.	Head - Ft. Exist.	Head - Ft. Prop.	Headwater El. Exist.	Headwater El. Prop.
Peak	2	35	49	59	902.19	0.05	0.00	902.24	902.19
	10	71	105	129	905.30	0.06	0.04	905.36	905.34
Design	50	107	117	132	906.46	0.22	0.19	906.68	906.65
Base	100	123	117	132	906.76	0.43	0.40	907.19	907.16
Scour Design Check									
Overtopping-Exist.									
Overtopping-Prop.									
Max. Calc.	500	159	117	132	907.34	0.43	0.39	907.77	907.73

10 year velocity through existing culvert = 0.42 ft/s
10 year velocity through proposed structure = 0.33 ft/s

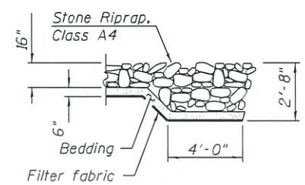

SECTION A-A

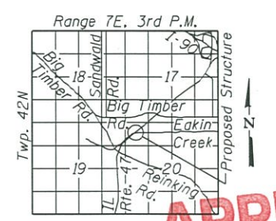

LOCATION SKETCH

HIGHWAY CLASSIFICATION

F.A.P Rte. 326 - IL Rte. 47
Functional Class: Other Principal Arterial
ADT: 9,850 (2013); 14,000 (2040)
ADTT: 13.9% (2013); 10.6% (2040)
DHV: 985 (2013); 1400 (2040)
Design Speed: 55 m.p.h.
Posted Speed: 55 m.p.h.
Two-Way Traffic
Directional Distribution: 50/50

DESIGN SPECIFICATIONS

2015 Interim to AASHTO LRFD Bridge Design Specifications, 7th Edition

LOADING HL-93

Allow 50#/sq. ft. for future wearing surface.

DESIGN STRESSES

FIELD UNITS

f'c = 3,500 psi
fy = 60,000 psi (Reinforcement)
fy = 50,000 psi (Permanent Sheet Piling)

APPROVED
DEC 08 2015
AS A BASIS FOR PREPARATION OF DETAILED PLANS

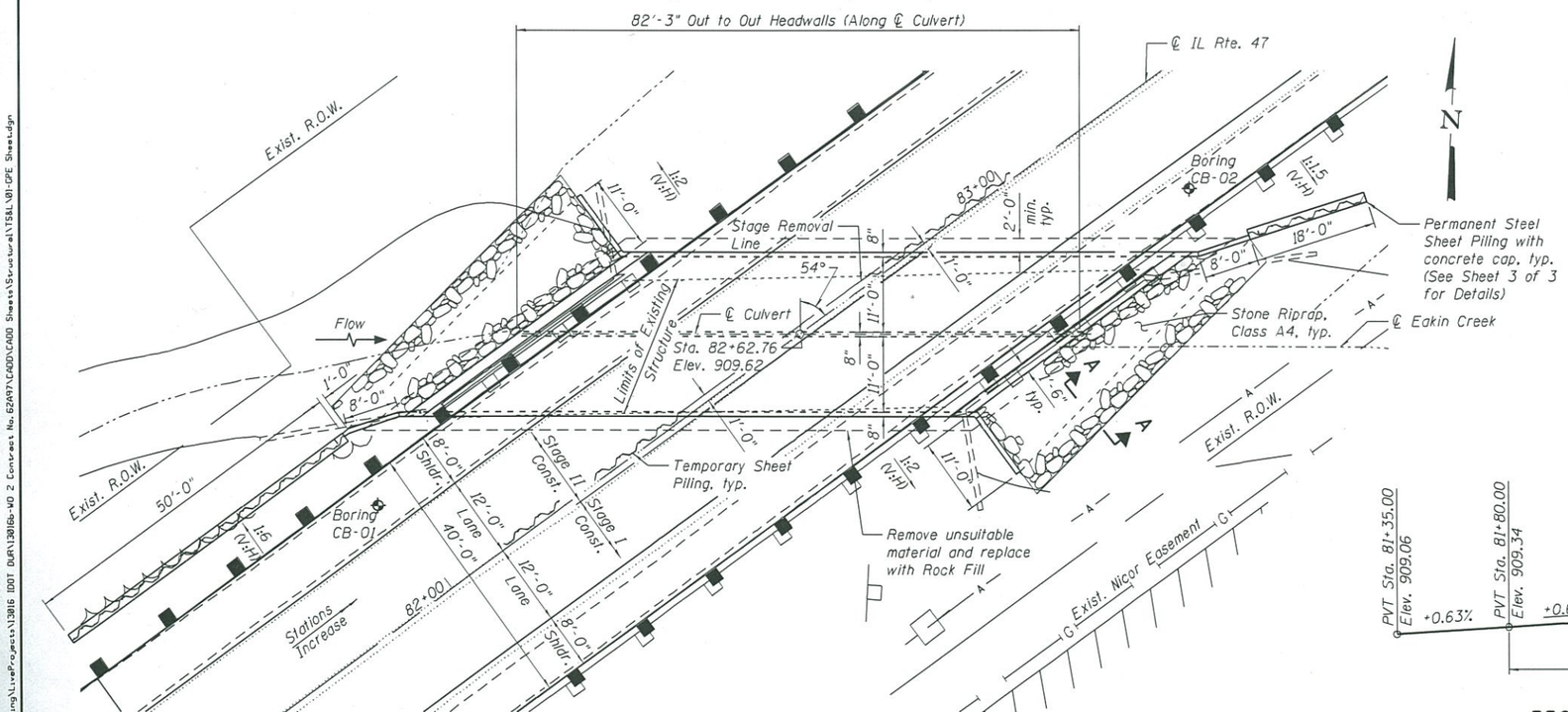

PLAN

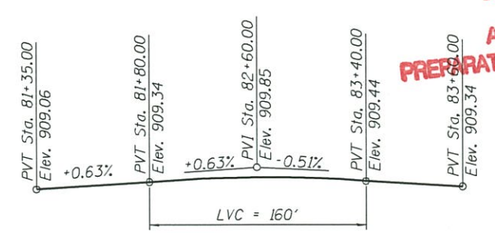

PROFILE GRADE

(Along ℄ IL Rte. 47)

GENERAL PLAN
IL ROUTE 47 OVER EAKIN CREEK
F.A.P. RTE 326
SECTION 2015-040B
KANE COUNTY
STATION 82+62.76
STRUCTURE NO. 045-0336

Accurate GROUP, INC.	USER NAME = sapant	DESIGNED - SAT	REVISED
		CHECKED - JMT	REVISED
	PLOT SCALE = 21.3333 ' / in.	DRAWN - JN	REVISED
	PLOT DATE = 12/8/2015	CHECKED - JMT	REVISED

STATE OF ILLINOIS
DEPARTMENT OF TRANSPORTATION

SHEET NO. 1 OF 3 SHEETS

F.A.P RTE.	SECTION	COUNTY	TOTAL SHEETS	SHEET NO.
326	2015-040B	KANE		
		CONTRACT NO. 62A97		
		ILLINOIS FED. AID PROJECT		

FILE NAME = G:\Engineering\Live Projects\13816 IDOT DUR\13816-W2 2 Contract No.62A97\CADD\CADD Sheets\Structural\15SL-V01-PE Sheet.dgn

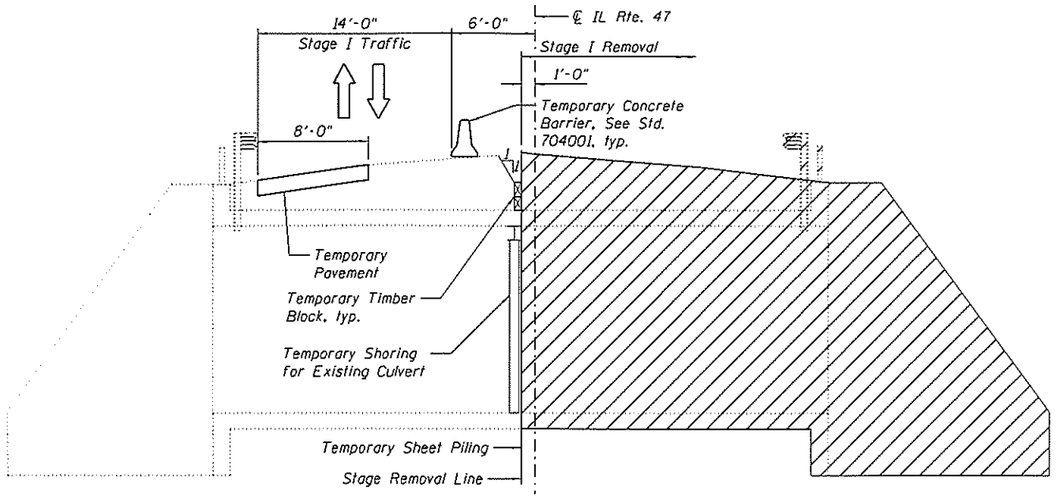

STAGE I REMOVAL

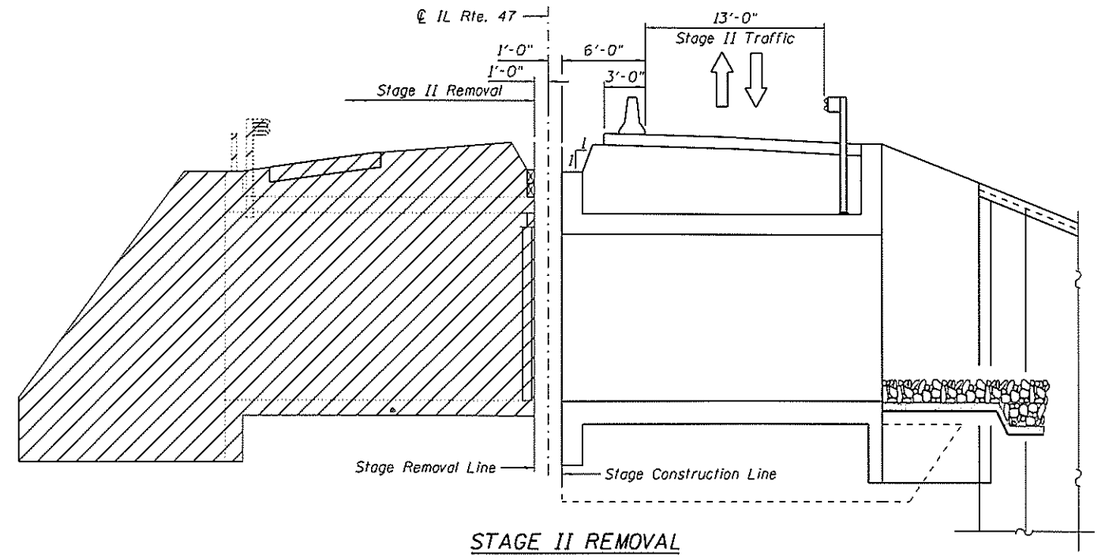

STAGE II REMOVAL

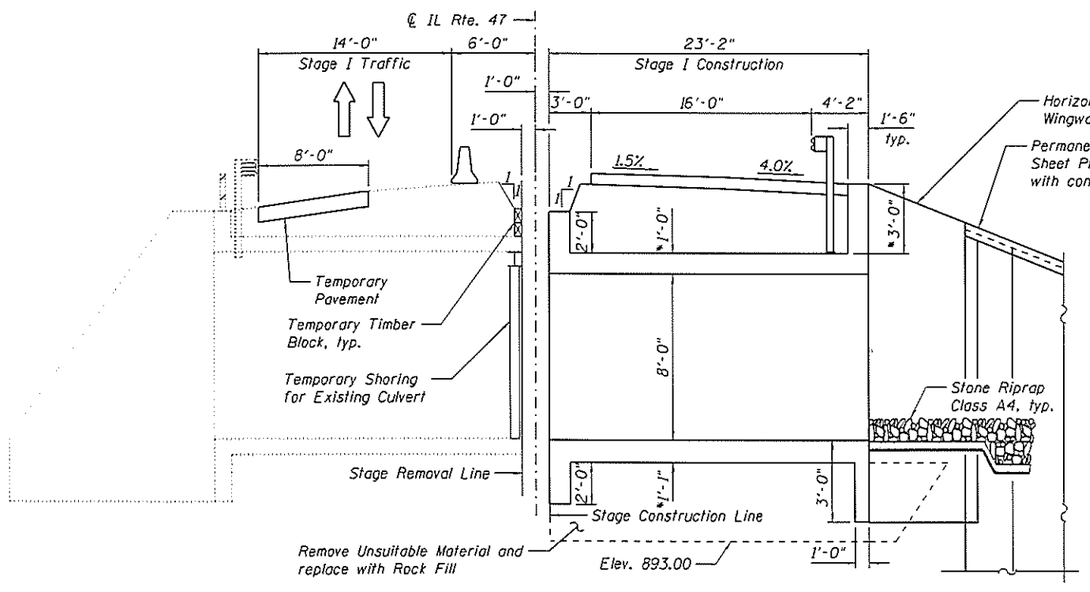

STAGE I CONSTRUCTION

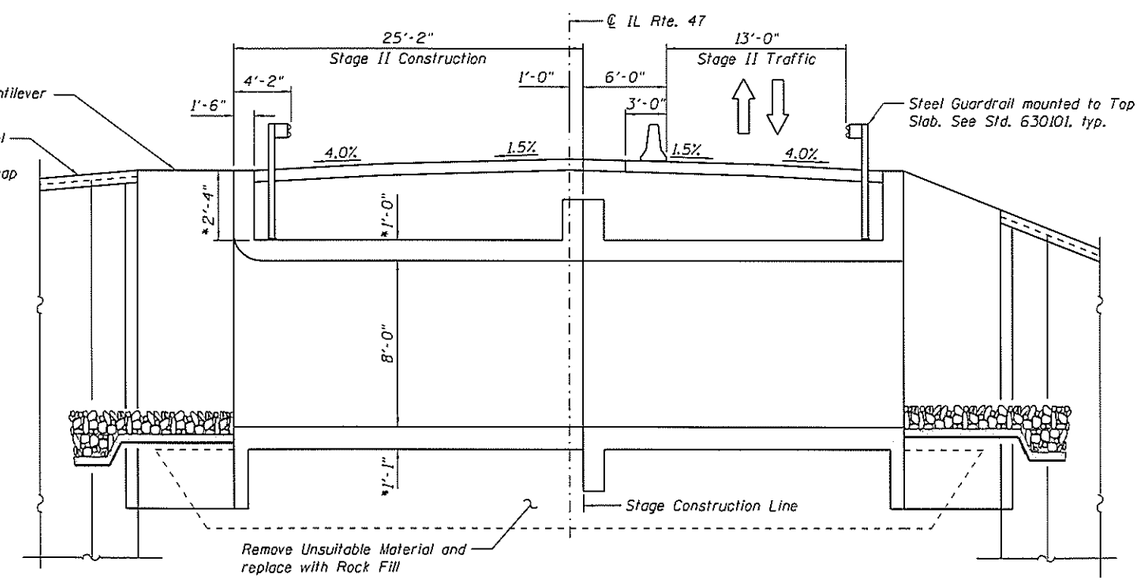

STAGE II CONSTRUCTION

LEGEND

Removal of existing structure and roadway

NOTES:

1. All dimensions are measured perpendicular to the roadway.
2. All sections are looking north.
3. One lane of traffic will be maintained during each stage utilizing temporary traffic signals.

* Subject to refinement during final design.

STAGE CONSTRUCTION DETAILS
IL ROUTE 47 OVER EAKIN CREEK
F.A.P. RTE 326
SECTION 2015-040B
KANE COUNTY
STATION 82+62.76
STRUCTURE NO. 045-0336

Accurate GROUP, INC.	USER NAME = sapant	DESIGNED - SAT	REVISED	STATE OF ILLINOIS DEPARTMENT OF TRANSPORTATION		F.A.P RTE.	SECTION	COUNTY	TOTAL SHEETS / SHEET NO.
		CHECKED - JMT	REVISED			326	2015-040B	KANE	
	PLOT SCALE = 10:8 ':' / in.	DRAWN - JN	REVISED					CONTRACT NO. 62A97	
	PLOT DATE = 12/7/2015	CHECKED - JMT	REVISED		SHEET NO. 2 OF 3 SHEETS			ILLINOIS FED. AID PROJECT	

FILE NAME = D:\Engineering\LiveProjects\13016 IDOT DUR\13016a-WD 2 Contract No. 62A97\CADD\CADD Sheets\Structural\TS&L\02-Staging Sheet.dgn

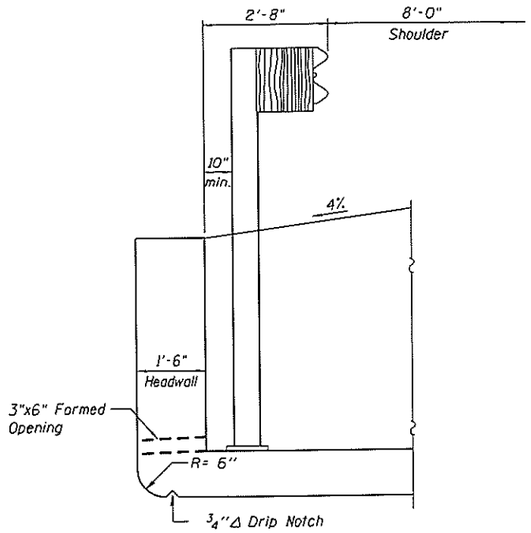

AT UPSTREAM END

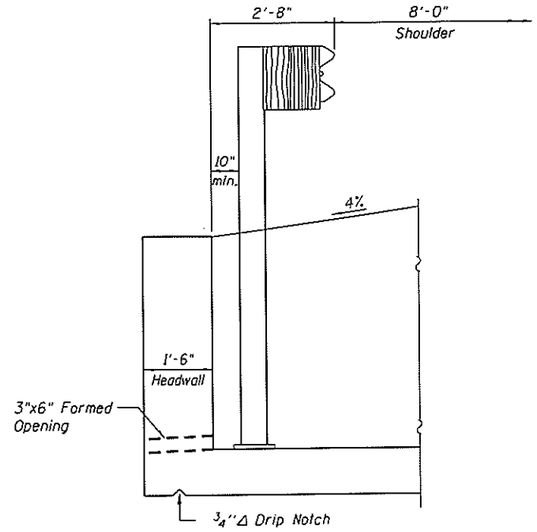

AT DOWNSTREAM END

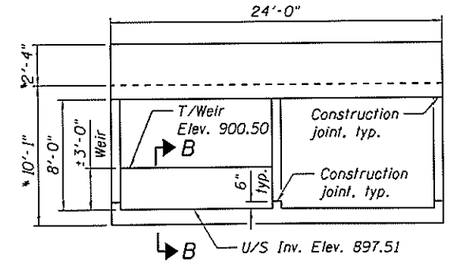

END VIEW

(Dimensions are perpendicular to the ℄ Culvert)
(Upstream end)
* Subject to refinement during final design.

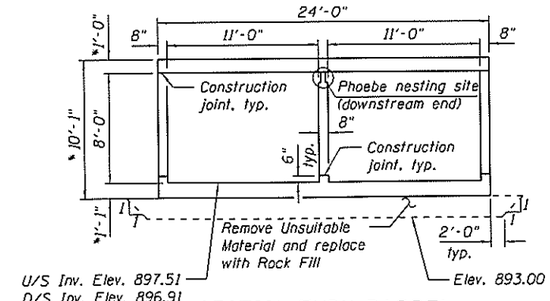

SECTION THRU BARREL

(Dimensions are perpendicular to the ℄ Culvert)
(Looking Downstream)
* Subject to refinement during final design.

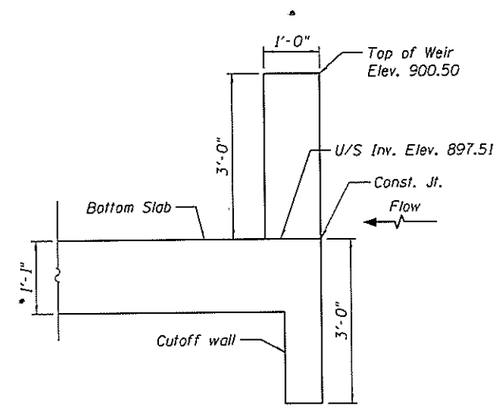

SECTION B-B

*Subject to refinement during final design

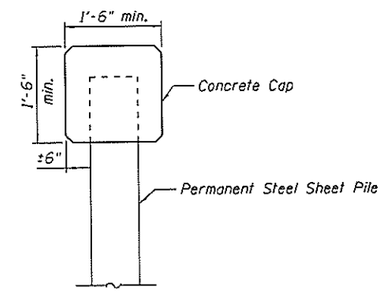

CONCRETE CAP DETAIL

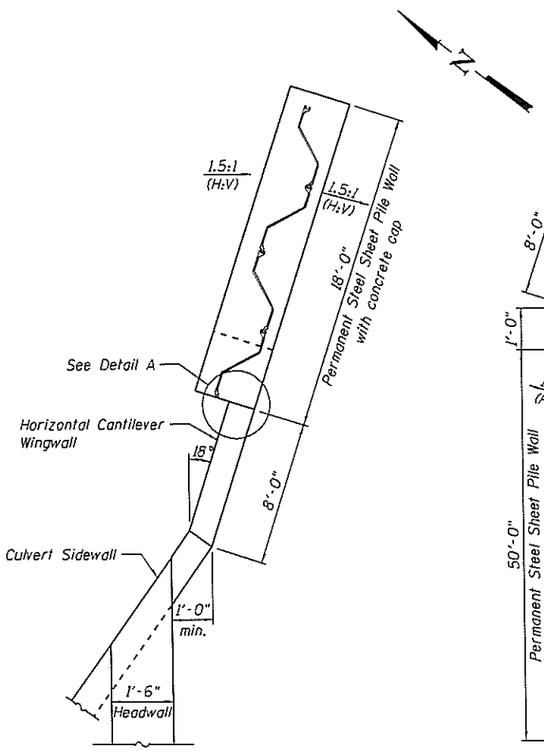

NE WINGWALL PLAN

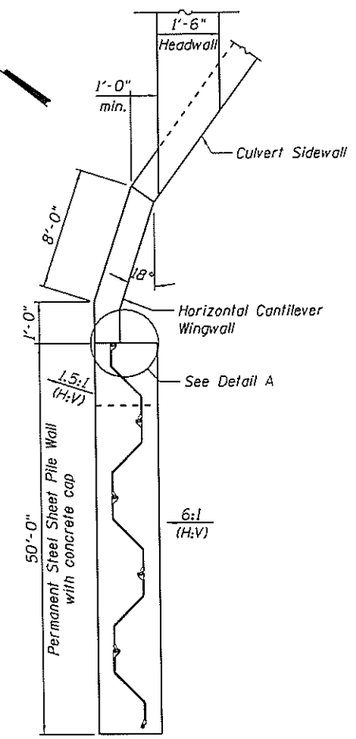

SW WINGWALL PLAN

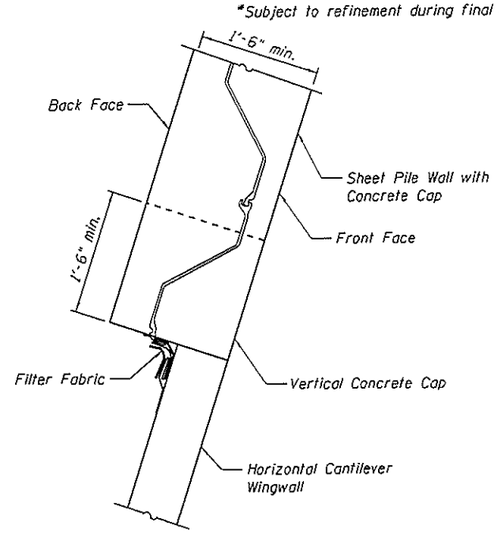

DETAIL A

GENERAL DETAILS
IL ROUTE 47 OVER EAKIN CREEK
F.A.P. RTE 326
SECTION 2015-040B
KANE COUNTY
STATION 82+62.76
STRUCTURE NO. 045-0336

FILE NAME = O:\Engineering\LiveProjects\13016 IDOT DUR\13016b-WD 2 Contract No. 62A97\CADD\CADD Sheets\Structural\TS&L\03-General Details.dgn

Accurate GROUP, INC.	USER NAME = sapant	DESIGNED - SAT	REVISED
		CHECKED - JMT	REVISED
	PLOT SCALE = 32:0 ':" / in.	DRAWN - JN	REVISED
	PLOT DATE = 12/7/2015	CHECKED - JMT	REVISED

STATE OF ILLINOIS
DEPARTMENT OF TRANSPORTATION

SHEET NO. 3 OF 3 SHEETS

F.A.P RTE.	SECTION	COUNTY	TOTAL SHEETS	SHEET NO.
326	2015-040B	KANE		
		CONTRACT NO. 62A97		
		ILLINOIS FED. AID PROJECT		