Bench Mark: BM 11-Chiseled square on southwest corner of concrete base of southern pier on S.N. 048-0006 (E.B.). Sta. 253+04.01. 61.87' RT. Elev. 804.95.

Existing Structure: S.N. 048-0005 (W.B.) and S.N. 048-0006 (E.B.) were originally built in 1965 as F.A.I. 74, Section 48-26 HVB. The back-to-back abutment length is 305'-7" and the out-to-out deck width is 36'-0". Each structure consists of a four span steel WF36 superstructure supported by concrete stub abutments founded on concrete piles and concrete column piers founded on timber pile supported footings. Structures are to be removed and replaced.

Traffic Control: Traffic will be maintained by constructing median crossovers to the north and south of the structures. Stage I will shift westbound traffic onto the existing eastbound structure. Upon completion of the new westbound structure, eastbound traffic will be shifted onto the westbound structure during Stage II construction.

Salvage: None

APPROVED

AUG 27 2015

AS A BASIS FOR PREPARATION OF DETAILED PLANS

Notes:
1. Weather station coordination to be completed by the District.
2. No freefall deck drains will be permitted in the span over the tracks or within 10 feet of cross arms of a railroad pole line.
3. The elevations of the existing top-of-rail profiles shall be verified prior to beginning construction.
4. See sheet 2 of 3 for Section A-A and Top of Rail Elevations.
5. Horizontal dimensions shown at right angles unless noted otherwise.
6. Existing 36" CMP culvert coordination to be completed by the District. Culvert condition to be assessed during final design.
7. Floor drains are located in span 1 only, typical each side of each structure.
8. Existing gas line to be relocated. All utility coordination to be completed by the District.
9. Steel girders and all associated components shall be galvanized.
10. Space proposed piles to miss existing piles.
11. Traffic Barrier Terminal, Type 5, Std. 631026.
12. Traffic Barrier Terminal, Type 6 Std. 631031.

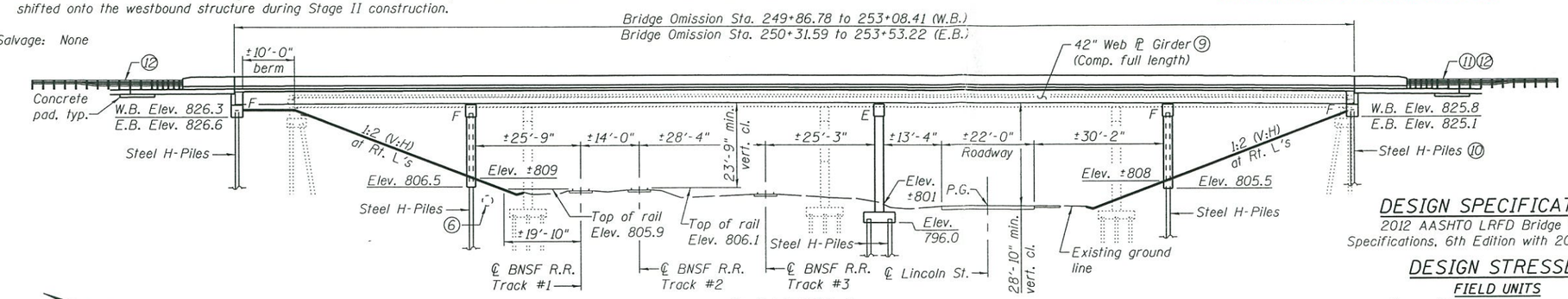

ELEVATION (5)

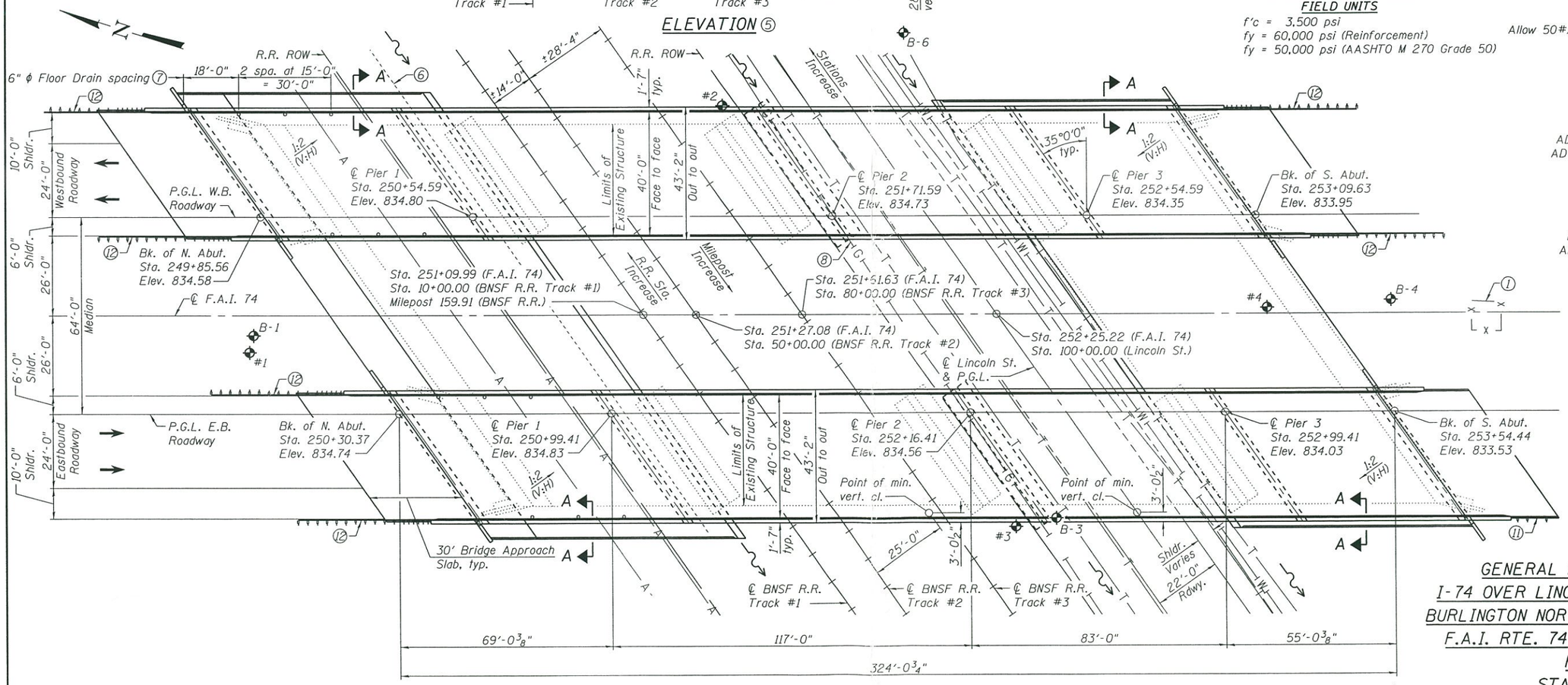

PLAN

DESIGN SPECIFICATIONS

2012 AASHTO LRFD Bridge Design Specifications, 6th Edition with 2013 Interims

DESIGN STRESSES

FIELD UNITS

f'c = 3,500 psi
fy = 60,000 psi (Reinforcement)
fy = 50,000 psi (AASHTO M 270 Grade 50)

SEISMIC DATA

Seismic Performance Zone (SPZ) = 1
Design Spectral Acceleration at 1.0 sec. (SD1) = 0.100g
Design Spectral Acceleration at 0.2 sec. (SDS) =0.149g
Soil Site Class = D

LOADING HL-93

Allow 50#/sq. ft. for future wearing surface.

HIGHWAY CLASSIFICATION

F.A.I. Rte. 74 - I-74
Functional Class: Interstate
ADT (one-way): 8,250 (2009); 11,112 (2029)
ADTT (one-way): 2,075 (2009); 2,795 (2029)
DHV (one-way): 1,111 (2029)
Design Speed: 70 m.p.h.
Posted Speed: 65 m.p.h.

Lincoln Street - County Highway 40
Functional Class: Minor Arterial (Urban)
ADT (two-way): 1,750 (2012); 1,804 (2032)
ADTT (two-way): 88 (2012); 90 (2032)
DHV (two-way): 180 (2032)
Design Speed: 60 m.p.h.
Posted Speed: 55 m.p.h.

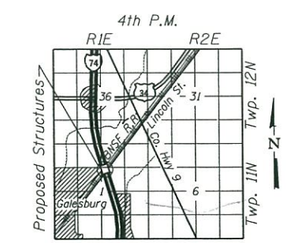

LOCATION SKETCH

GENERAL PLAN AND ELEVATION
I-74 OVER LINCOLN STREET (C.H. 40) AND BURLINGTON NORTHERN SANTA FE RAILROAD
F.A.I. RTE. 74 - SEC. 48-26 HVB, RS-2
KNOX COUNTY
STATION 251+70.00
STRUCTURE NO. 048-0101 (W.B.)
STRUCTURE NO. 048-0102 (E.B.)

GATES ASSOCIATES Engineering • Architecture
ILLINOIS: Eastport Business Center 1, 108 Larker Court, Suite 1, Collinsville, IL 62234, tel 618.345.2200, fax 618.345.7233
MISSOURI: Laclede Gas Building, 720 Olive, Suite 1650, St. Louis, MO 63101, tel 314.589.8281, fax 314.589.9605
www.gatesassociates.com

USER NAME =	DESIGNED - SJN	REVISED	
	CHECKED - MAG	REVISED	
PLOT SCALE =	DRAWN - SJN	REVISED	
PLOT DATE =	CHECKED - MAG	REVISED	

STATE OF ILLINOIS
DEPARTMENT OF TRANSPORTATION

SHEET NO. 1 OF 3 SHEETS

F.A.I. RTE.	SECTION	COUNTY	TOTAL SHEETS	SHEET NO.
74	48-26 HVB, RS-2	KNOX		
		CONTRACT NO. 68656		
		ILLINOIS FED. AID PROJECT		

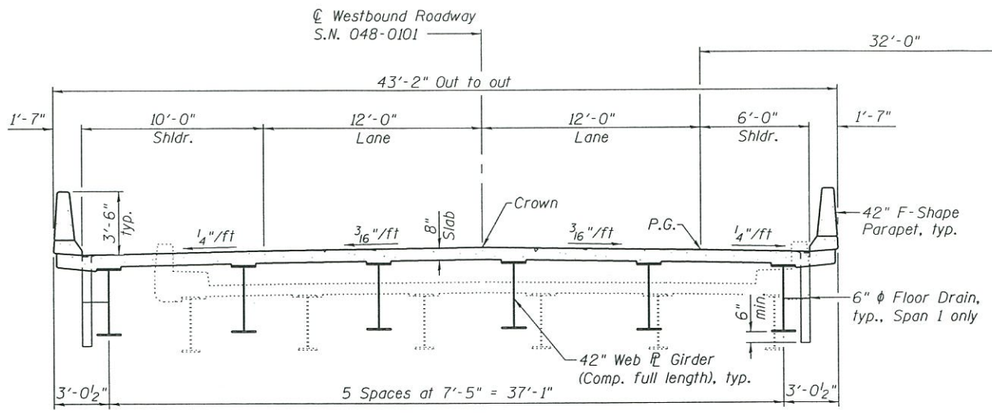

WESTBOUND

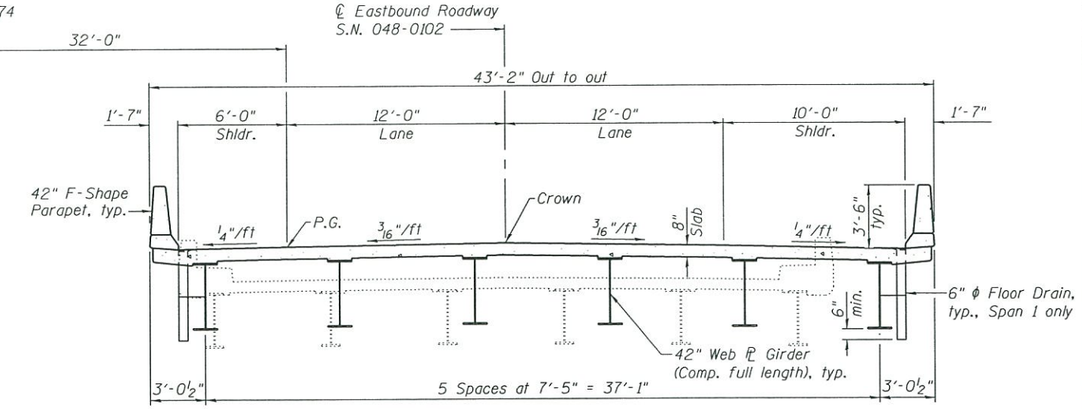

EASTBOUND

CROSS SECTIONS

(Looking South)

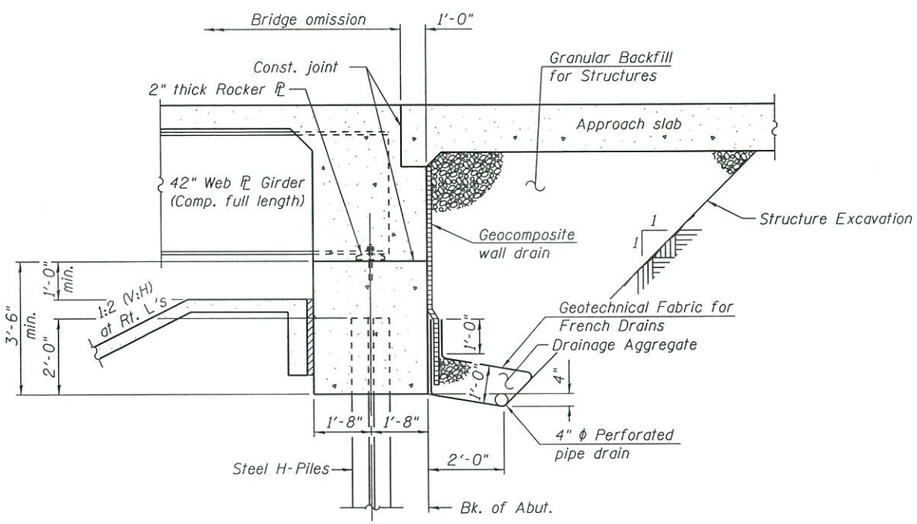

SECTION THRU INTEGRAL ABUTMENT

(Horiz. dim. at Rt. L's)

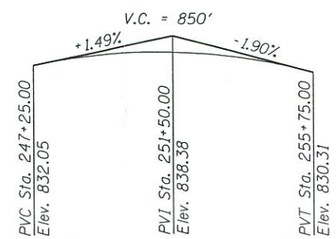

PROFILE GRADE - F.A.I. 74

(along P.G.L. of W.B. and E.B. roadway)

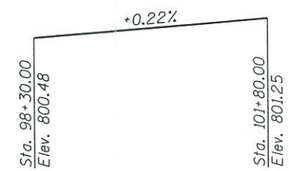

PROFILE GRADE - LINCOLN ST.

(along ℄ roadway)

APPROVED

AUG 27 2015

AS A BASIS FOR PREPARATION OF DETAILED PLANS

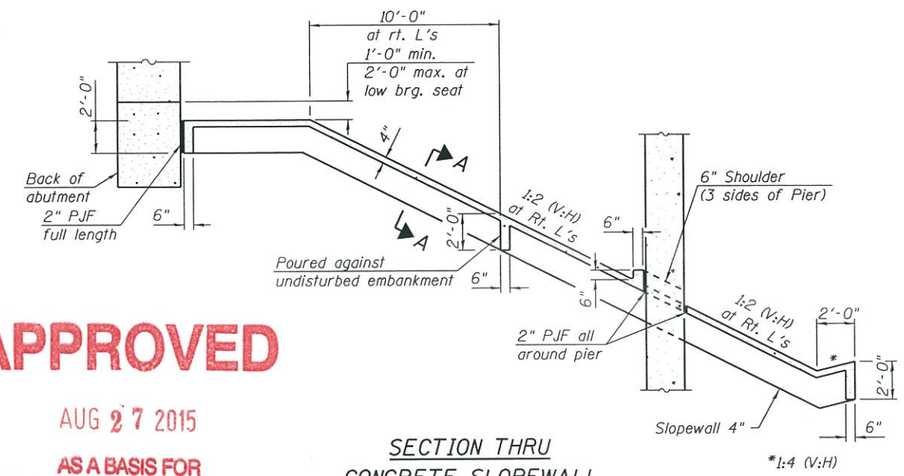

SECTION THRU CONCRETE SLOPEWALL

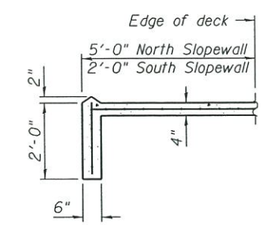

SECTION A-A

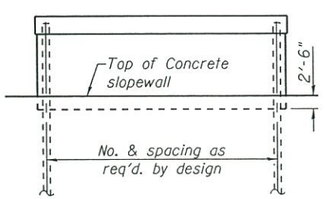

PIER 1 & 3 SKETCH

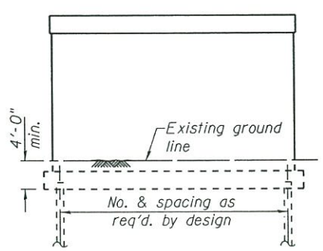

PIER 2 SKETCH

TOP OF RAIL ELEVATIONS - BNSF R.R. (TRACK #1)

Station	Elev.
1+00	804.08
2+00	804.44
3+00	804.79
4+00	805.11
5+00	805.37
6+00	805.60
7+00	805.79
8+00	805.87
9+00	805.87
10+00	805.85
11+00	805.84
12+00	805.88
13+00	805.94
14+00	805.94
15+00	805.93
16+00	805.90
17+00	805.84
18+00	805.74
19+00	805.59

TOP OF RAIL ELEVATIONS - BNSF R.R. (TRACK #2)

Station	Elev.
41+00	803.73
42+00	804.16
43+00	804.50
44+00	804.81
45+00	805.06
46+00	805.33
47+00	805.57
48+00	805.80
49+00	806.01
50+00	806.10
51+00	806.13
52+00	806.11
53+00	806.14
54+00	806.12
55+00	806.15
56+00	806.14
57+00	806.07
58+00	805.92
59+00	805.79

TOP OF RAIL ELEVATIONS - BNSF R.R. (TRACK #3)

Station	Elev.
71+00	803.49
72+00	803.85
73+00	804.23
74+00	804.48
75+00	804.57
76+00	804.64
77+00	804.60
78+00	804.48
79+00	804.53
80+00	804.60
81+00	804.63
82+00	804.71
83+00	804.80
84+00	804.99
85+00	805.35
86+00	805.69
87+00	806.04
88+00	806.49
89+00	806.91

DETAILS

I-74 OVER LINCOLN STREET (C.H. 40) AND BURLINGTON NORTHERN SANTA FE RAILROAD

F.A.I. RTE. 74 - SEC. 48-26 HVB, RS-2

KNOX COUNTY

STATION 251+70.00

STRUCTURE NO. 048-0101 (W.B.)

STRUCTURE NO. 048-0102 (E.B.)

GATES ASSOCIATES Engineering - Architecture

ILLINOIS: Eastport Business Center 1, 103 Lanter Court, Suite 1, Collinsville, IL 62234, tel 618.345.2200, fax 618.345.7223

MISSOURI: Laclede Gas Building, 720 Olive, Suite 1600, St. Louis, MO 63101, tel 314.588.8381, fax 314.588.9605

www.nalesandgates.com

USER NAME =	DESIGNED - SJN	REVISED	
	CHECKED - MAG	REVISED	
PLOT SCALE =	DRAWN - SJN	REVISED	
PLOT DATE =	CHECKED - MAG	REVISED	

STATE OF ILLINOIS
DEPARTMENT OF TRANSPORTATION

SHEET NO. 2 OF 3 SHEETS

F.A.I. RTE.	SECTION	COUNTY	TOTAL SHEETS	SHEET NO.
74	48-26 HVB, RS-2	KNOX		

CONTRACT NO. 68656

ILLINOIS FED. AID PROJECT

APPROVED

AUG 27 2015

AS A BASIS FOR
PREPARATION OF DETAILED PLANS

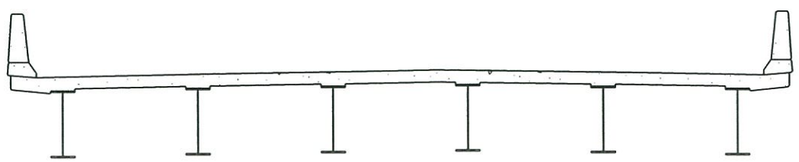

WESTBOUND

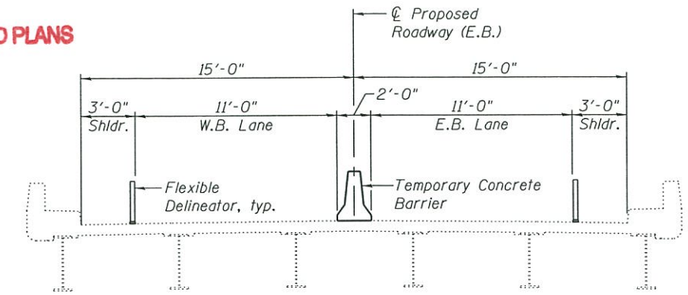

EASTBOUND

STAGE I TRAFFIC
(Looking South)

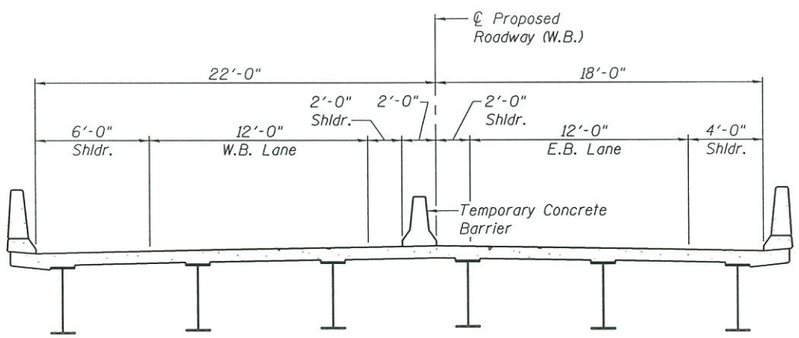

WESTBOUND

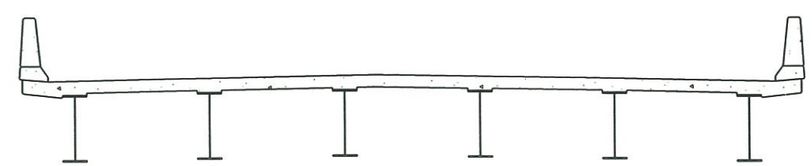

EASTBOUND

STAGE II TRAFFIC
(Looking South)

STAGING DETAILS
I-74 OVER LINCOLN STREET (C.H. 40) AND
BURLINGTON NORTHERN SANTA FE RAILROAD
F.A.I. RTE. 74 - SEC. 48-26 HVB, RS-2
KNOX COUNTY
STATION 251+70.00
STRUCTURE NO. 048-0101 (W.B.)
STRUCTURE NO. 048-0102 (E.B.)

GATES ASSOCIATES
Engineering • Architecture
ILLINOIS: Eastport Business Center 1, 100 Lanker Court, Suite 1, Collinsville, IL 62234, tel 618.345.2200, fax 618.345.7222
MISSOURI: Laclede Gas Building, 720 Olive, Suite 1660, St. Louis, MO 63101, tel 314.588.8381, fax 314.589.9609
www.gatesassociates.com

USER NAME =	DESIGNED - SJN	REVISED
	CHECKED - MAG	REVISED
PLOT SCALE =	DRAWN - SJN	REVISED
PLOT DATE =	CHECKED - MAG	REVISED

STATE OF ILLINOIS
DEPARTMENT OF TRANSPORTATION

SHEET NO. 3 OF 3 SHEETS

F.A.I. RTE.	SECTION	COUNTY	TOTAL SHEETS	SHEET NO.
74	48-26 HVB, RS-2	KNOX		
		CONTRACT NO. 68656		
		ILLINOIS FED. AID PROJECT		