Benchmark:
TBM1 R.R. Spike 1' above finished grade in west face of 1st utility pole north of Willow Road on east side of east Frontage Road.
Elevation=786.05 (NAVD 88)

TBM7 R.R. Spike 1' above finished grade in west face of 1st utility pole south of Windsor Drive on west side of east Frontage Road.
Elevation=790.08 (NAVD 88)

Existing Structure No. 049-0020. Built in 1966 as SBI Rt. 59
3-Span reinforced concrete haunched girder bridge on 3 column hammerhead piers and pile bent abutments supported on concrete piles.
The Structure is 200'-6" Bk.-Bk. and overall deck width is 36'-0".
Traffic Maintenance: Traffic to be detoured while structure is removed and replaced.
Salvage: None

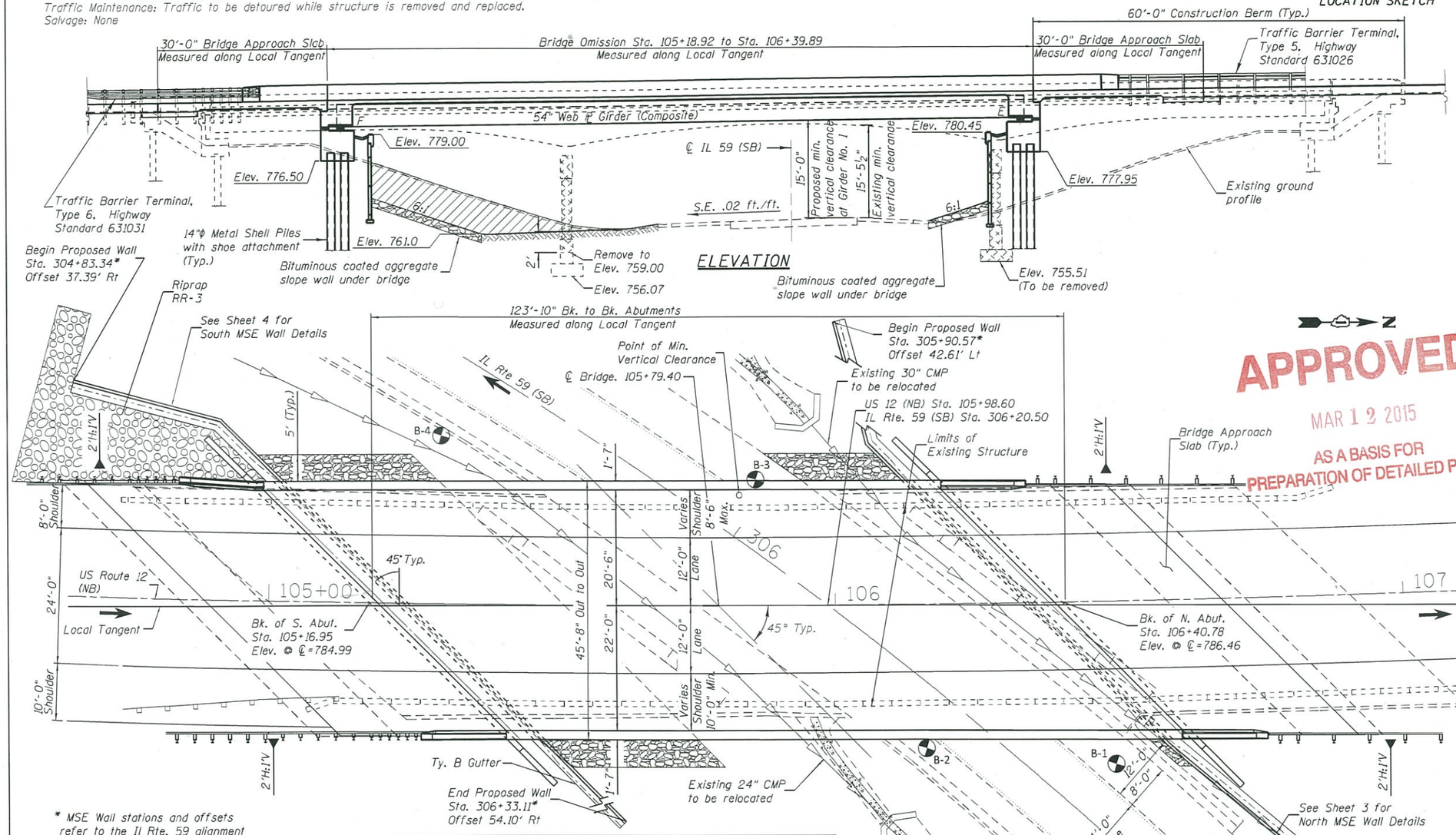

* MSE Wall stations and offsets refer to the Il Rte. 59 alignment

BORING LOCATIONS					
Boring	Station	Offset	Northing	Easting	Elevation
B-1	306+77.19	10.58' Lt.	2080223.56	1028458.87	762.93
B-2	306+49.92	9.01' Rt.	2080190.77	1028466.23	762.38
B-3	305+97.32	10.44' Lt.	2080148.07	1028429.84	764.91
B-4	305+46.66	13.93' Rt.	2080092.69	1028438.86	765.44

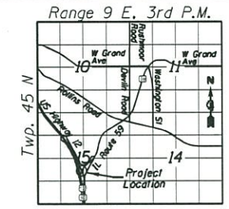

LOCATION SKETCH

HIGHWAY CLASSIFICATION

US 12 (FAP 334)
Functional Class: Principal Arterial
ADT: (1-Way) 9,650 (2013)
11,019 (2032)
ADTT: 5%
DHV: 1,100 (2032)
Design Speed: 50 mph
Posted Speed: 45 mph
One-Way Traffic (Northbound)

HIGHWAY CLASSIFICATION

IL 59 (SB)
Functional Class: Principal Arterial
ADT: (1-Way) 11,000 (2013)
12,557 (2032)
ADTT: 3%
DHV: 1,250 (2032)
Design Speed: 50 mph
Posted Speed: 45 mph
One -Way Traffic (Southbound)

DESIGN SPECIFICATIONS

2014 AASHTO LRFD Bridge Design Specifications, 7th Edition

DESIGN STRESSES

FIELD UNITS
f'c = 3,500 psi
fy = 60,000 psi (Reinforcement)
fy = 50,000 psi (M270 Grade 50)

PRECAST UNITS
f'c = 4,500 psi (Precast Panels)

LOADING HL-93

Allow 50#/sq. ft. for future wearing surface.

SEISMIC DATA

Seismic Performance Zone (SPZ) = 1
Design Spectral Acceleration at 1.0 sec. (S_{D1}) = 0.076g
Design Spectral Acceleration at 0.2 sec. (S_{DS}) = 0.127g
Soil Site Class = D

HORIZONTAL CURVE DATA

US 12 NORTHBOUND	IL 59 SOUTHBOUND
PI STA. = 105+63.00	PI STA. = 307+09.96
Δ = 18° 00' 54" (LT)	Δ = 66° 16' 54" (RT)
D = 1° 36' 48"	D = 7° 07' 10"
R = 3,551.60'	R = 804.78'
T = 563.00'	T = 525.44'
L = 1,116.71'	L = 930.99'
E = 44.35'	E = 156.35'
P.C. STA. = 100+00.00	P.C. STA. = 301+84.52
P.T. STA. = 111+16.71	P.T. STA. = 311+15.51
S.E. = 0.02 ft./ft.	S.E. = 0.02 ft./ft.

APPROVED
MAR 12 2015
AS A BASIS FOR PREPARATION OF DETAILED PLANS

GENERAL PLAN AND ELEVATION
US 12 (NB) OVER IL 59 (SB)
FAP RTE 334 SEC. 22-2HB-1
LAKE COUNTY
STATION 105+79.40
STRUCTURE NO. 049-0601

PREPARED BY:
CEMCON, Ltd.
Consulting Engineers, Land Surveyors & Planners
2280 White Oak Circle, Suite 100
Aurora, Illinois 60504-9675
Ph: 630.862.2100 Fax: 630.862.2199
E-Mail: cadd@cemcon.com Website: www.cemcon.com

FILE NAME =	USER NAME = RDS	DESIGNED - NRF	REVISED -
		CHECKED - MAM	REVISED -
	PLOT SCALE =	DRAWN - RDS	REVISED -
	PLOT DATE =	CHECKED - 03-10-15	REVISED -

STATE OF ILLINOIS
DEPARTMENT OF TRANSPORTATION

GENERAL PLAN AND ELEVATION

F.A.P. RTE.	SECTION	COUNTY	TOTAL SHEETS	SHEET NO.
334	22-2HB-1	LAKE	4	1
		CONTRACT NO.		
		ILLINOIS FED. AID PROJECT		

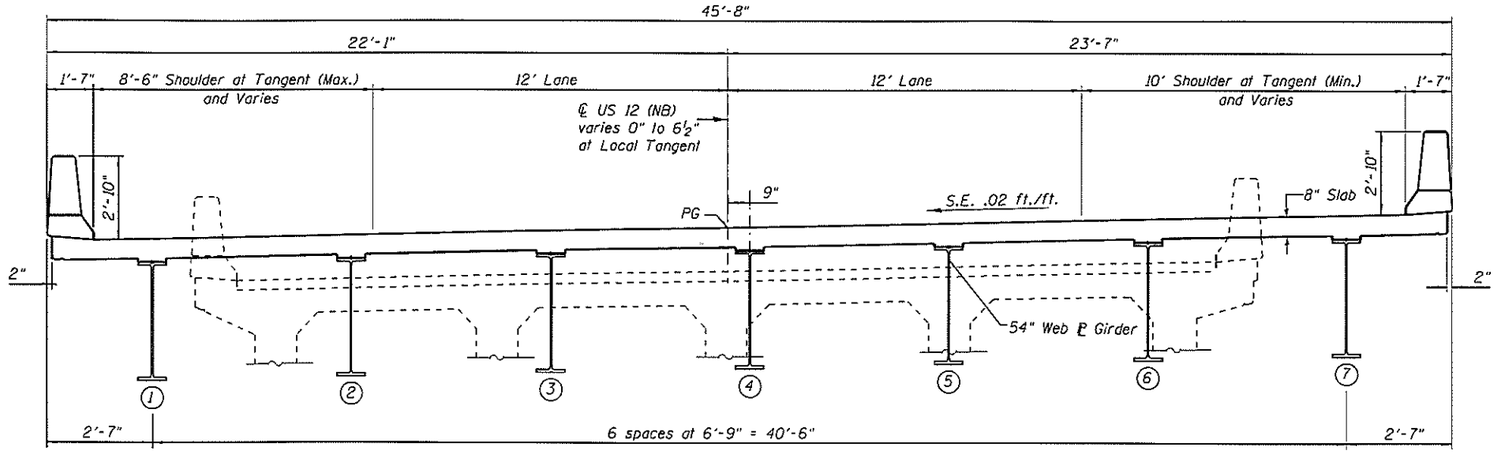

CROSS SECTION
(Looking North)

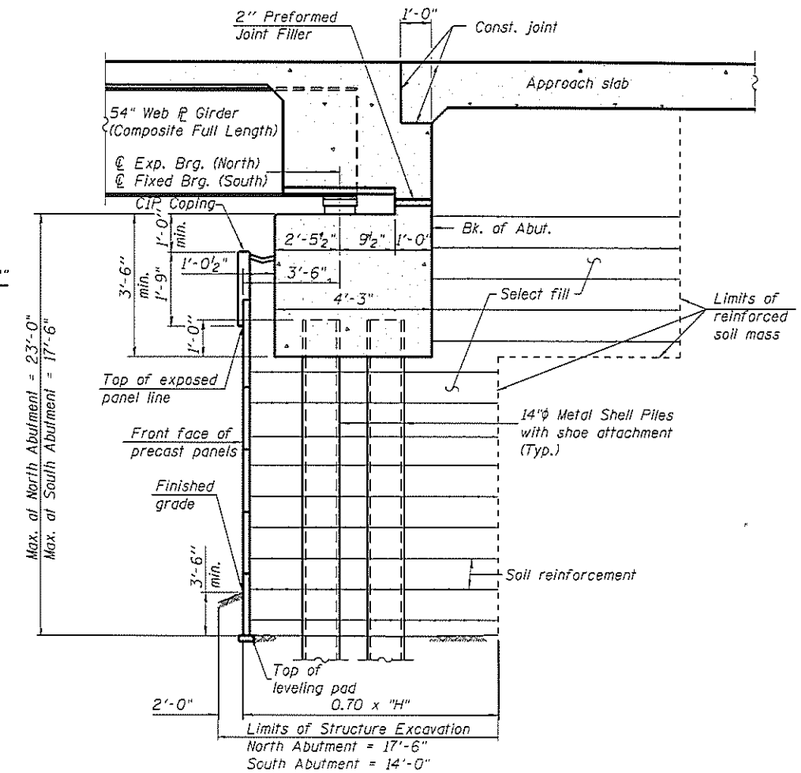

SECTION THRU SEMI-INTEGRAL ABUTMENT
(Horiz. dim. @ Rt. L's)

Note: The MSE Wall Supplier shall design the soil abutment soil reinforcement to resist a horizontal force of _____ k/ft. of abutment.

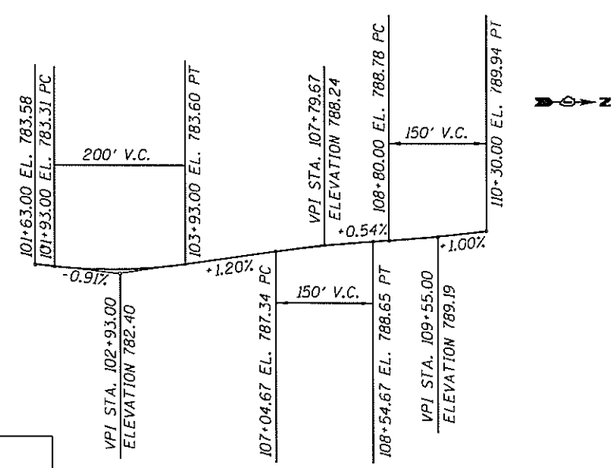

US 12 (NB)
PROPOSED PROFILE GRADE

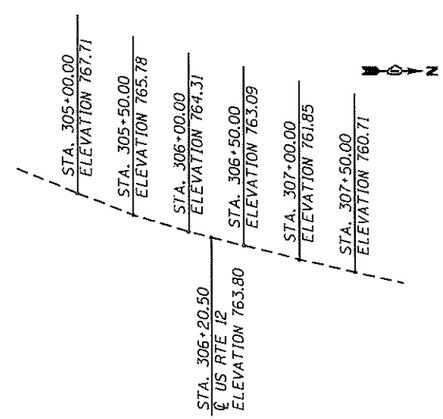

IL RTE 59 (SB)
EXISTING PROFILE GRADE

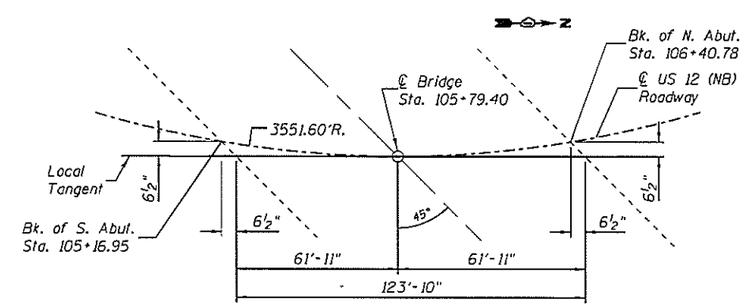

OFFSET SKETCH

PREPARED BY:
CEMCON, Ltd.
Consulting Engineers, Land Surveyors & Planners
2280 White Oak Circle, Suite 100
Aurora, Illinois 60504-9675
Ph: 630.862.2100 Fax: 630.862.2199
E-Mail: cadd@cemcon.com Website: www.cemcon.com

FILE NAME =	USER NAME = RDS	DESIGNED - NRF	REVISED -
		CHECKED - MAM	REVISED -
	PLOT SCALE =	DRAWN - RDS	REVISED -
	PLOT DATE =	CHECKED - 03-10-15	REVISED -

STATE OF ILLINOIS
DEPARTMENT OF TRANSPORTATION

CROSS SECTIONS

F.A.P. RTE.	SECTION	COUNTY	TOTAL SHEETS	SHEET NO.
334	22-2HB-1	LAKE	4	2
		CONTRACT NO.		
		ILLINOIS FED. AID PROJECT		

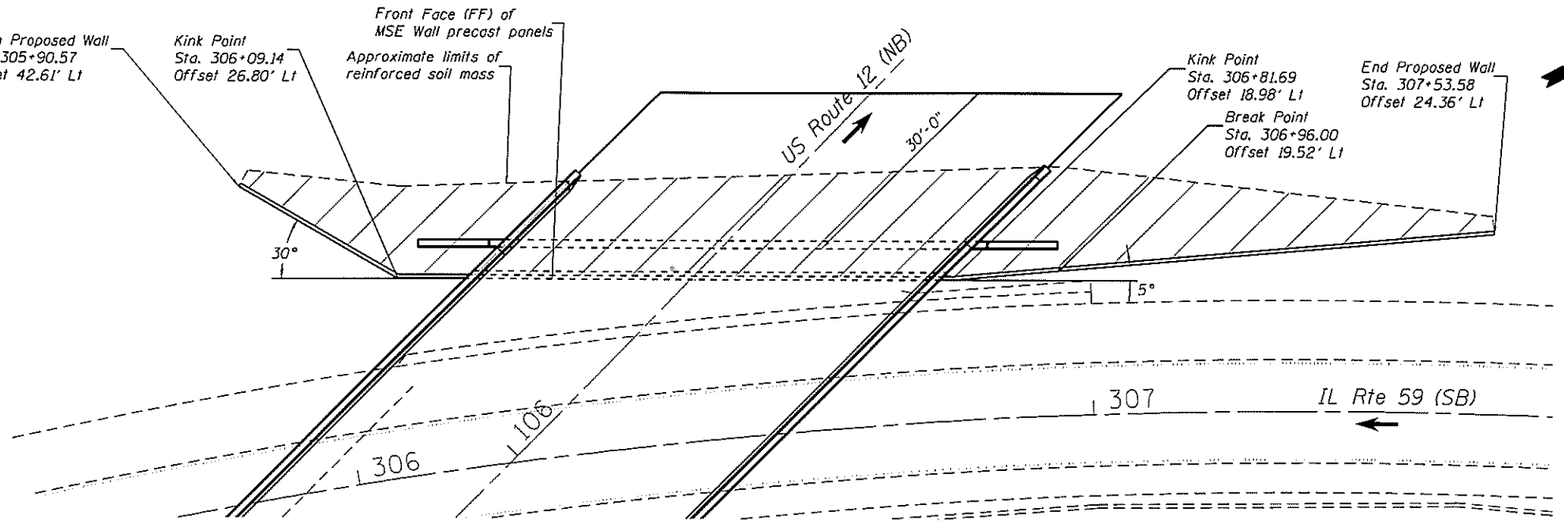

PLAN
(Looking North)

Note: All offsets are measured from the ℄ of Illinois Route 59 to the front face of the precast panels

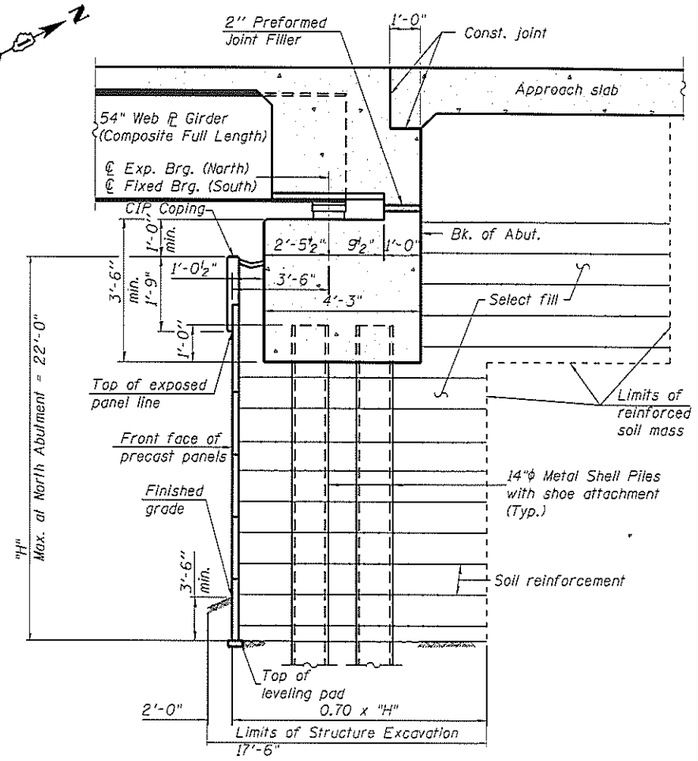

SECTION THRU SEMI-INTEGRAL ABUTMENT
(Horiz. dim. @ Rt. L's)

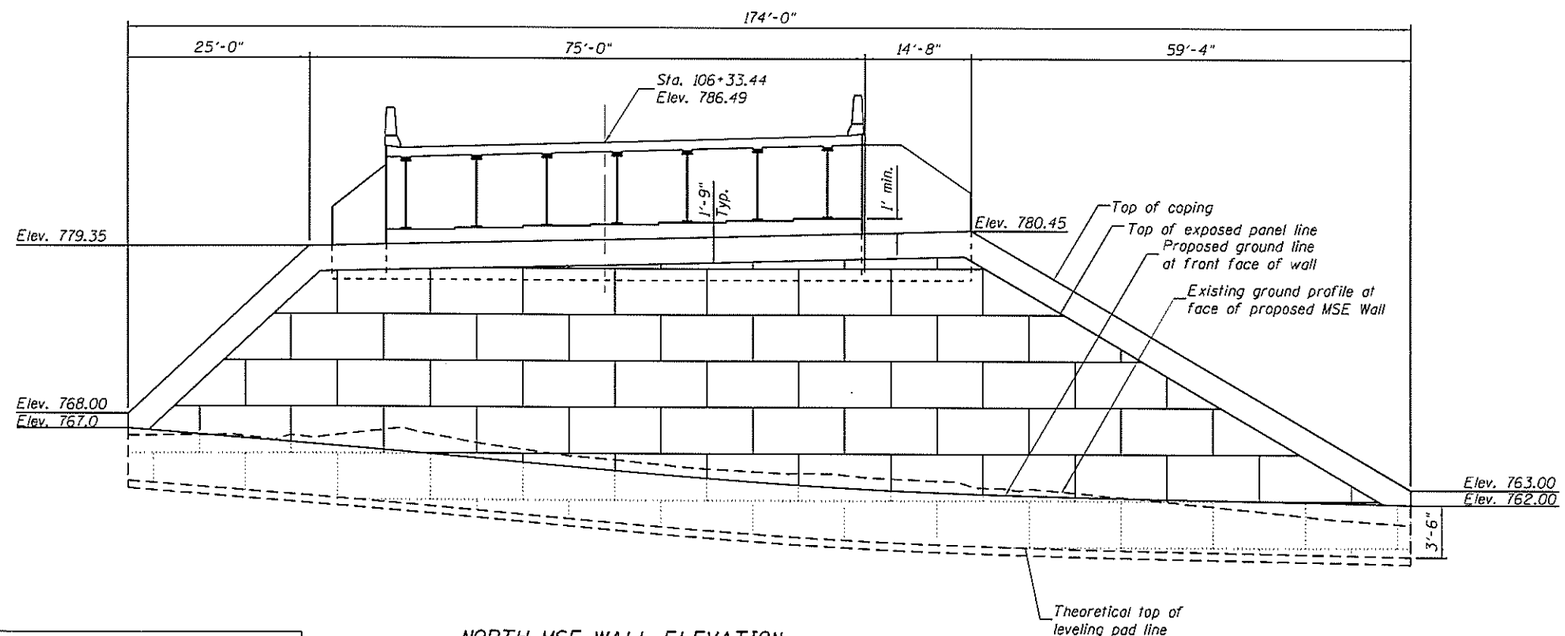

NORTH MSE WALL ELEVATION
(Looking North)

MSE NORTH WALL DETAILS
US 12 (NB) OVER IL 59 (SB)
FAP RTE 334 SEC. 22-2HB-1
LAKE COUNTY
STATION 105+79.40
STRUCTURE NO. 049-0601

PREPARED BY:
CEMCON, Ltd.
Consulting Engineers, Land Surveyors & Planners
2280 White Oak Circle, Suite 100
Aurora, Illinois 60504-9675
Ph: 630.862.2100 Fax: 630.862.2199
E-Mail: cadd@cemcon.com Website: www.cemcon.com

FILE NAME =	USER NAME = RDS	DESIGNED - NRF	REVISED -
		CHECKED - MAM	REVISED -
	PLOT SCALE =	DRAWN - RDS	REVISED -
	PLOT DATE =	CHECKED - 03-10-15	REVISED -

STATE OF ILLINOIS
DEPARTMENT OF TRANSPORTATION

F.A.P. RTE.	SECTION	COUNTY	TOTAL SHEETS	SHEET NO.
334	22-2HB-1	LAKE	4	3
		CONTRACT NO.		
		ILLINOIS FED. AID PROJECT		

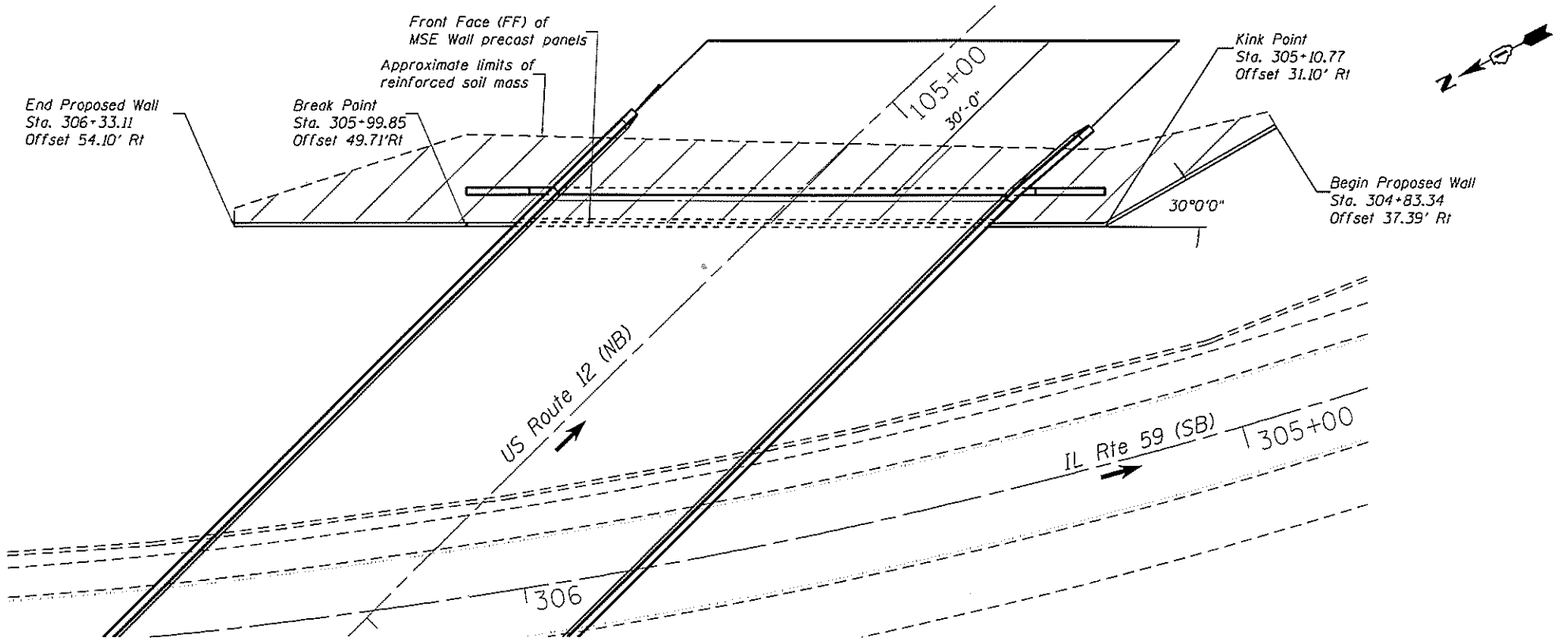

PLAN
(Looking South)

Note: All offsets are measured from the ℄ of Illinois Route 59 to the front face of the precast panels

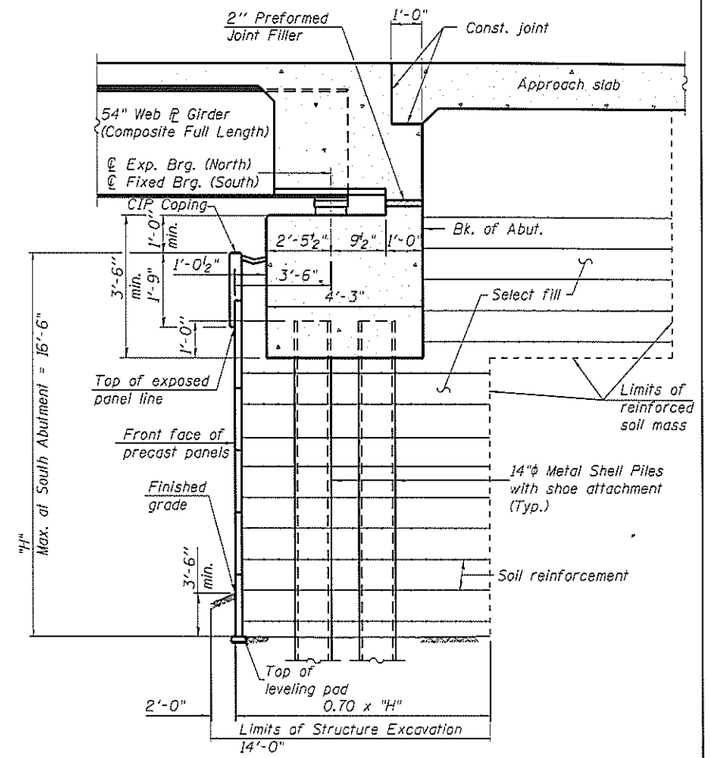

SECTION THRU SEMI-INTEGRAL ABUTMENT
(Horiz. dim. @ Rt. L's)

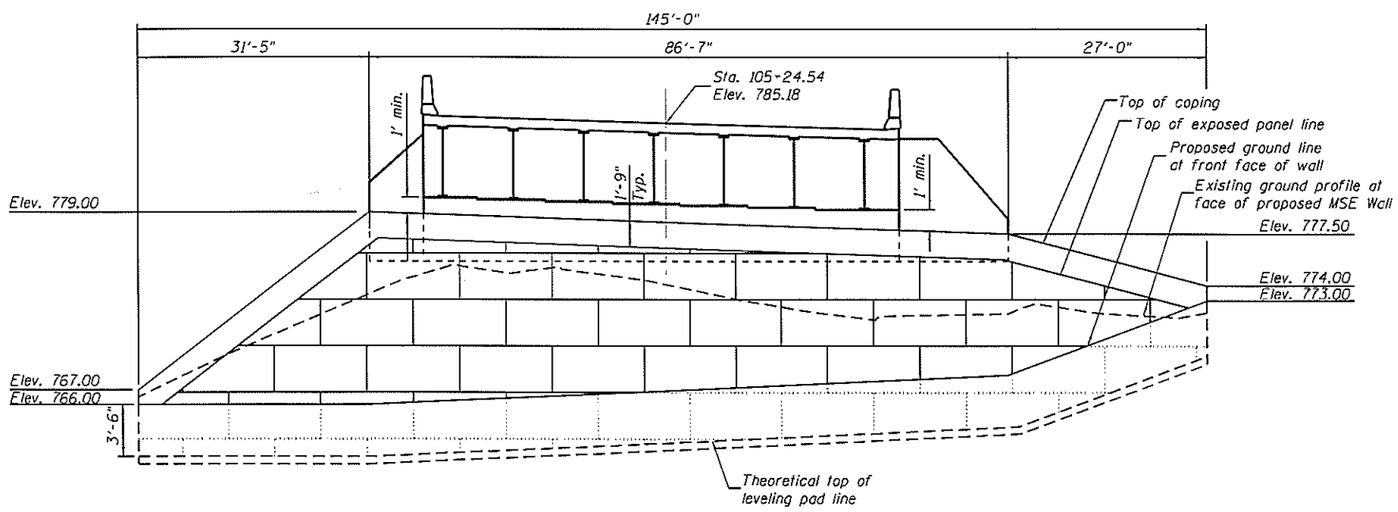

SOUTH MSE WALL ELEVATION
(Looking South)

MSE SOUTH WALL DETAILS
US 12 (NB) OVER IL 59 (SB)
FAP RTE 334 SEC. 22-2HB-1
LAKE COUNTY
STATION 105+79.40
STRUCTURE NO. 049-0601

PREPARED BY:
CEMCON, Ltd.
Consulting Engineers, Land Surveyors & Planners
2280 White Oak Circle, Suite 100
Aurora, Illinois 60504-9675
Ph: 630.862.2100 Fax: 630.862.2199
E-Mail: cadd@cemcon.com Website: www.cemcon.com

FILE NAME =	USER NAME = RDS	DESIGNED - NRF	REVISED -
		CHECKED - MAM	REVISED -
	PLOT SCALE =	DRAWN - RDS	REVISED -
	PLOT DATE =	CHECKED - 03-10-15	REVISED -

STATE OF ILLINOIS
DEPARTMENT OF TRANSPORTATION

F.A.P. RTE.	SECTION	COUNTY	TOTAL SHEETS	SHEET NO.
334	22-2HB-1	LAKE	4	4
		CONTRACT NO.		
		ILLINOIS FED. AID PROJECT		