Benchmark: Box "□" cut at the northwest wingwall of the existing US Route 6 over Marley Creek bridge (Existing SN 099-0149); Station 380+39.68, Offset 22.27' Lt., Elevation 664.41

Existing Structure: SN 099-0149 was originally built in 1930 under SAR 38, Section 33B-15D. It was a single span reinforced concrete tee beam superstructure on closed wall abutments supported on spread footings. In 1980, the structure was reconstructed as FAS 1294, Section 33-B1. Precast Prestressed Concrete Deck Beams (27"x36") replaced the concrete tee beam superstructure, and part of the substructure was removed and replaced. The out-to-out width of the superstructure is 42'-0", and the structure length is 53'-9" measured back-to-back of abutments.
One lane of traffic in alternating directions will be maintained utilizing temporary traffic signals and staged construction.

Salvage: None.

APPROVED
AUG 26 2016
AS A BASIS FOR PREPARATION OF DETAILED PLANS

WATERWAY INFORMATION

Drainage Area = 12.4 sq. mi. Low Grade Elev. 663.2 @ Sta. 376+73

Flood	Freq. Yr.	Q C.F.S.	Opening Sq. Ft. Exist.	Opening Sq. Ft. Prop.	Nat. H.W.E.	Head - Ft. Exist.	Head - Ft. Prop.	Headwater El. Exist.	Headwater El. Prop.
	10	1238	236	544	660.2	0.7	0.5	660.9	660.7
Design	50	2342	285	771	662.0	1.0	0.3	663.0	662.3
Base	100	2928	285	877	662.8	0.8	0.3	663.6	663.1
Scour Design Check	200	3187	285	918	663.1	0.7	0.4	663.8	663.5
Overtopping (Ex.)	20	1490	250	-	660.6	0.8	-	661.4	-
Overtopping (Pr.)	125	3000	-	891	662.9	-	0.3	-	663.2
Max. Calc.	500	3963	285	1039	664.1	0.3	0.4	664.4	664.5

10 Year Velocity through Existing Bridge = 5.2 ft/sec
10 Year Velocity through Proposed Bridge = 2.3 ft/sec

DESIGN SCOUR ELEVATION TABLE

Event/Limit State	Design Scour Elevations (ft.) W. Abut.	Pier 1	Pier 2	E. Abut.	Item 113
Q100	660.86	651.51	650.33	661.47	5
Q200	660.86	651.16	650.67	661.47	
Design	660.86	650.90	650.33	661.47	
Check	660.86	650.90	650.67	661.47	

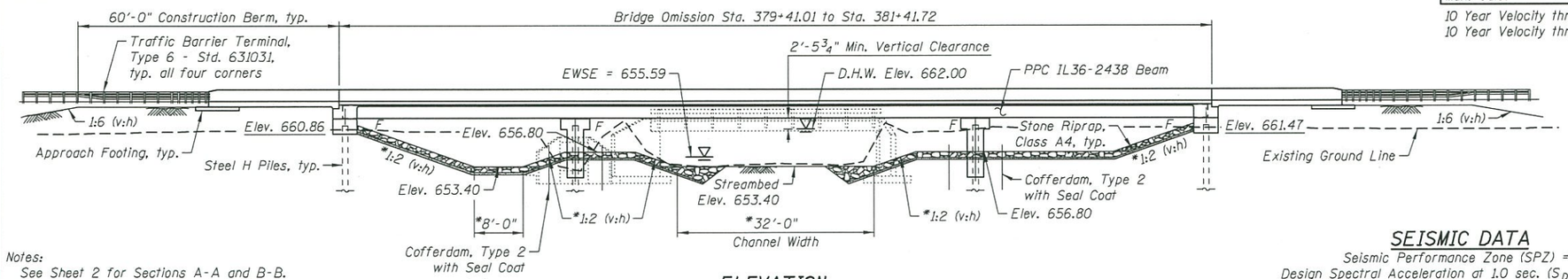

Notes:
See Sheet 2 for Sections A-A and B-B.
Const. = Construction

ELEVATION

* At Right L's to Abutment

SEISMIC DATA

Seismic Performance Zone (SPZ) = 1
Design Spectral Acceleration at 1.0 sec. (S_{D1}) = 0.094g
Design Spectral Acceleration at 0.2 sec. (S_{DS}) = 0.163g
Soil Site Class = D

HIGHWAY CLASSIFICATION

F.A.U. Route 0297 - US Route 6
Functional Class: Minor Arterial (Urban)
ADT: 11,700 (2009); 14,000 (2040)
ADTT: 250 (2009); 300 (2040)
DHV: 1,120 (2040)
Design Speed: 55 m.p.h.
Posted Speed: 55 m.p.h.
Two-Way Traffic Directional Distribution: 50:50

LOADING HL-93

Allow 50#/sq. ft. for future wearing surface.

DESIGN SPECIFICATIONS

2014 AASHTO LRFD Bridge Design Specifications, 7th Edition, with 2015 and 2016 Interims

DESIGN STRESSES

FIELD UNITS

f'c = 3,500 psi
f'c = 4,000 psi (Superstructure Concrete)
fy = 60,000 psi (Reinforcement)

PRECAST PRESTRESSED UNITS

f'c = 8,500 psi
f'ci = 7,000 psi
fpu = 270,000 psi (0.6" ϕ low relax strands)
fpbt = 202,300 psi (0.6" ϕ low relax strands)

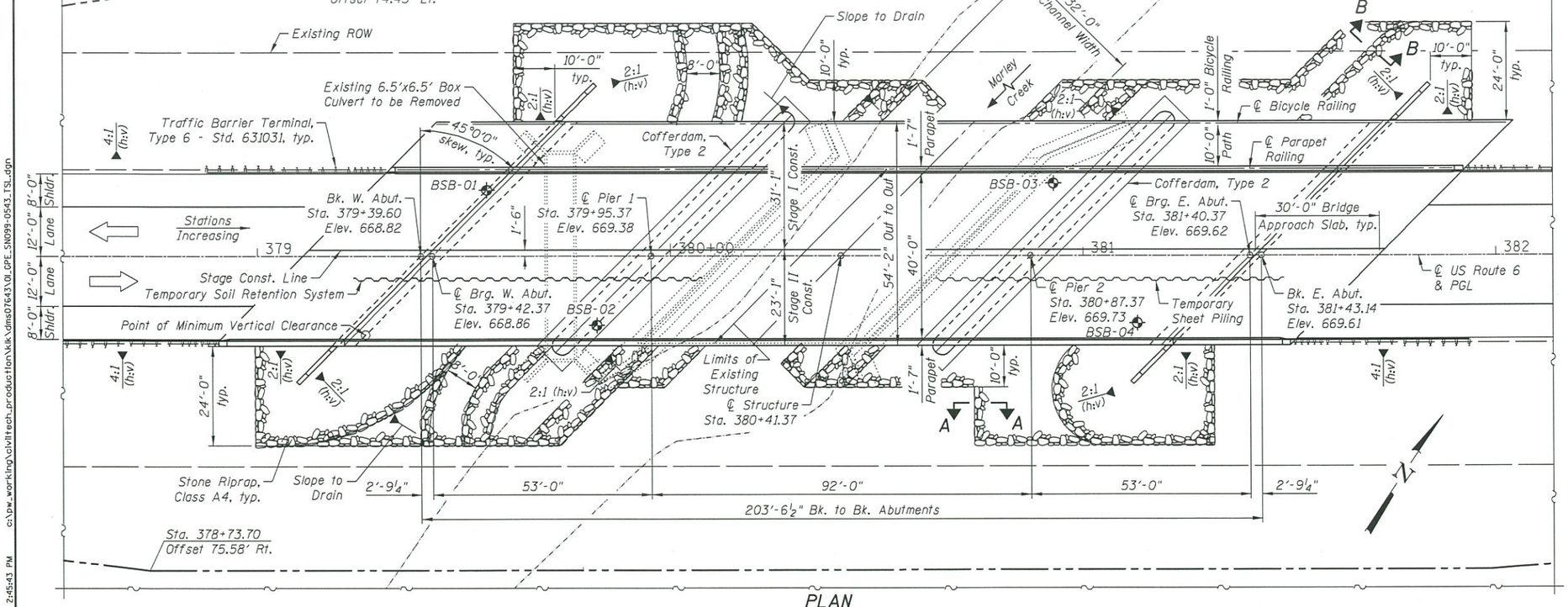

PLAN

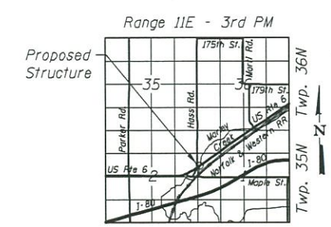

LOCATION SKETCH

GENERAL PLAN & ELEVATION
US ROUTE 6 OVER MARLEY CREEK (WEST)
FAU ROUTE 0297 - SECTION 33B (B-R)
WILL COUNTY
STA. 380+41.37
STRUCTURE NO. 099-0543

CIVILTECH
450 E Devon Ave, Suite 300
Itasca, Illinois 60143
Tel: 630.773.3900 Fax: 630.773.3975
www.civiltechinc.com

DRAWN	K. KOMPARE
DESIGNED	M. LANGE
CHECKED	G. HATLESTAD
DATE	AUGUST 24, 2016

STATE OF ILLINOIS
DEPARTMENT OF TRANSPORTATION

US ROUTE 6 OVER MARLEY CREEK

SHEET NO. 1 OF 2 SHEETS

F.A.U. RTE.	SECTION	COUNTY	TOTAL SHEETS	SHEET NO.
0297	33B (B-R)	WILL		

CONTRACT NO.

ILLINOIS FED. AID PROJECT

klk 8/24/2016 2:45:43 PM c:\pw_working\civiltech_production\klk\dms07643\01_GPE_SN099-0543_TSL.dgn

APPROVED

AUG 26 2016

AS A BASIS FOR PREPARATION OF DETAILED PLANS

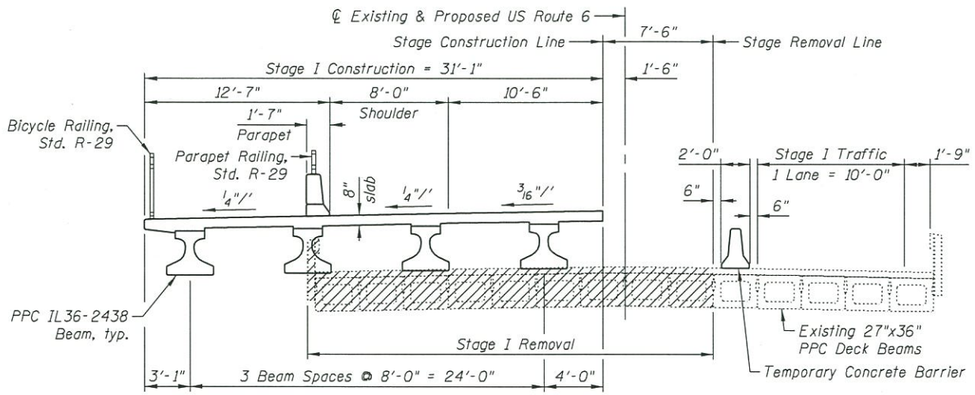

STAGE I REMOVAL AND CONSTRUCTION

(Looking East)

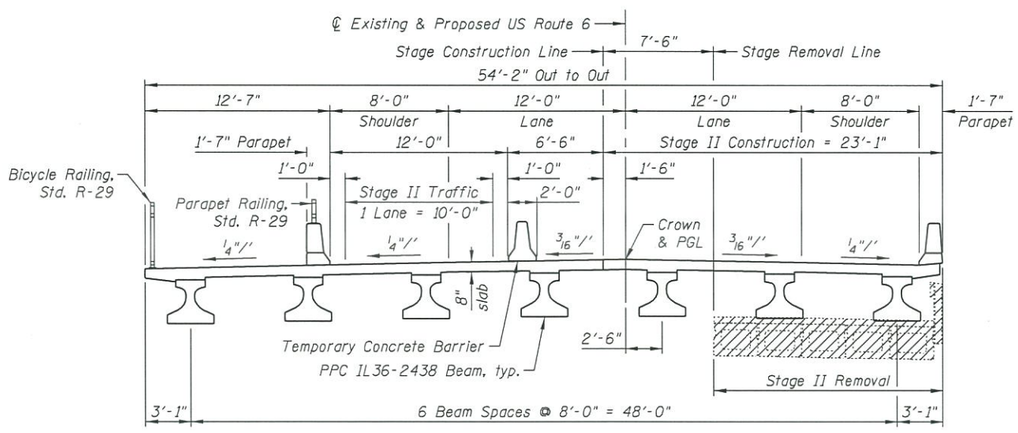

STAGE II REMOVAL & CONSTRUCTION

(Looking East)

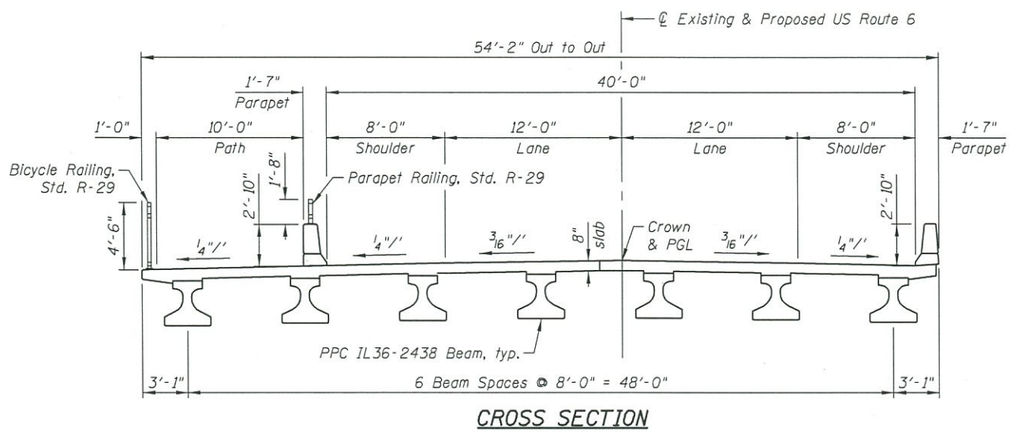

CROSS SECTION

(Looking East)

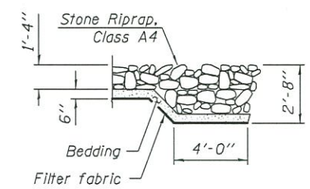

SECTION A-A

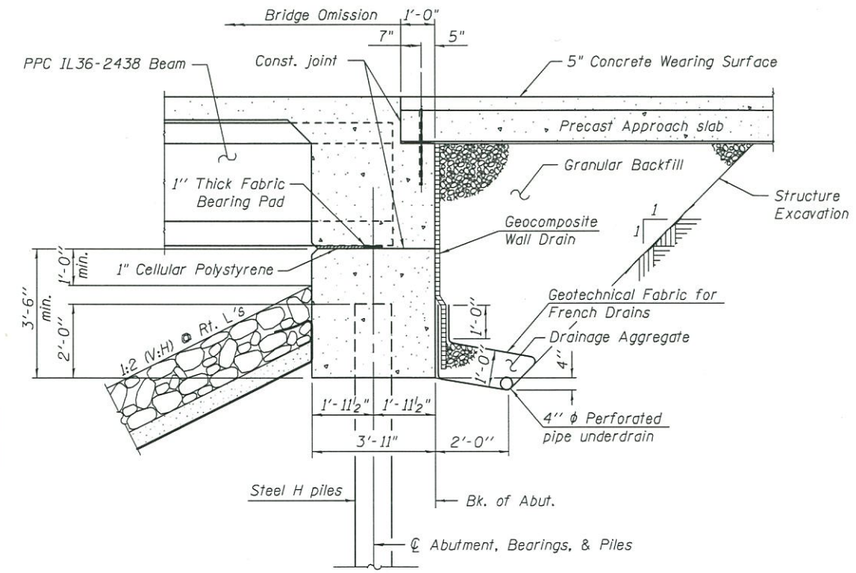

SECTION THRU INTEGRAL ABUTMENT

(Horiz. dim. @ Rt. L's)

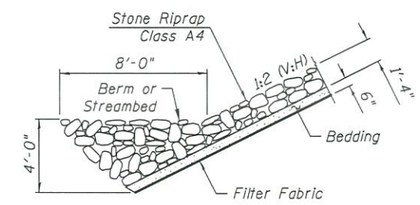

SECTION B-B

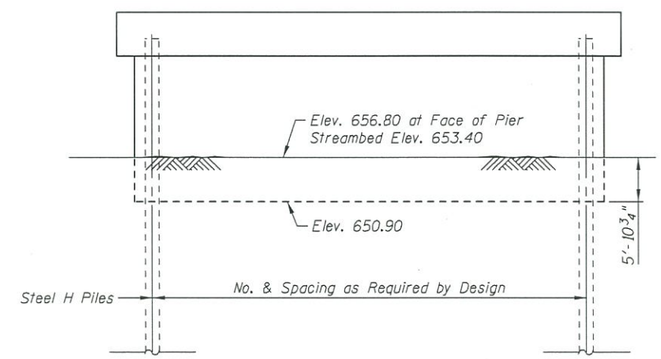

PIER SKETCH

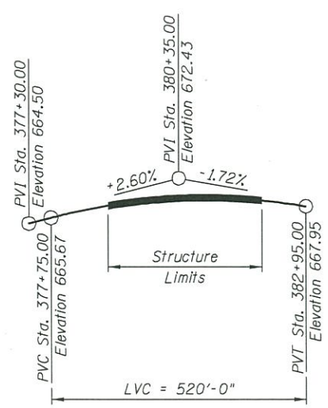

PROFILE GRADE

(along ℄ US Route 6)

CROSS SECTION, STAGING, & DETAILS
US ROUTE 6 OVER MARLEY CREEK (WEST)
FAU ROUTE 0297 - SECTION 33B (B-R)
WILL COUNTY
STA. 380+41.37
STRUCTURE NO. 099-0543

CIVILTECH
450 E Devon Ave, Suite 300
Itasca, Illinois 60143
Tel: 630.773.3900 Fax: 630.773.3975
www.civiltechinc.com

DRAWN	K. KOMPARE
DESIGNED	M. LANGE
CHECKED	G. HATLESTAD
DATE	AUGUST 24, 2016

STATE OF ILLINOIS
DEPARTMENT OF TRANSPORTATION

US ROUTE 6 OVER MARLEY CREEK

SHEET NO. 2 OF 2 SHEETS

F.A.U. RTE.	SECTION	COUNTY	TOTAL SHEETS	SHEET NO.
0297	33B (B-R)	WILL		

CONTRACT NO.

ILLINOIS FED. AID PROJECT

klk 8/24/2016 2:45:41 PM c:\pw_working\civiltech_production\klk\dms07643\02_Details_SN099-0543_TSL.dgn