BENCH MARK

B.M. Lin 4 Chiseled "□" in Northwest corner of West End of box culvert on Weber Road draining Lily Cache Slough Northwest from "Super Wash" ±500'
Elev. = 617.46

Precast alternate not allowed (except culvert extension for Stage I Traffic)

Existing Structure built in 1987 as Section 87-00170-08-FP, Weber Road. Station 177+00. The existing structure is a 10'-0"x4'-0" reinforced Box Culvert, 75'-8" out to out length. Existing Structure to be removed and replaced. Traffic is to be maintained utilizing stage construction. Temporary pavement and temporary culvert extension will be constructed to accomodate Stage I Traffic.

No Salvage.

WATERWAY INFORMATION

Drainage Area = 2.63 Sq. Mi. Existing Overtopping Elev. = 618.61 at Sta. 786+00.65
Proposed Overtopping Elev. = 620.86 at Sta. 784+95.11

Flood	Freq. Yr.	Discharge ft^3/s	Waterway Opening-ft^2		Nat. H.W.E. ft.	Head - ft.		Headwater Elev. - ft.	
			Exist.	Prop.		Exist.	Prop.	Exist.	Prop.
	10	105	10.4	22.7	614.5	1.5	0.8	616.0	615.3
Design	50	160	13.2	27.4	614.7	2.0	1.0	616.7	615.7
Base	100	207	18.4	37.2	615.1	2.4	1.0	617.5	616.1
Max. Calc.	500	220	23.6	47.4	615.6	3.3	1.2	618.9	616.8

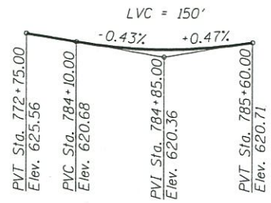

PROFILE GRADE

C.H. 88 (Weber Road)

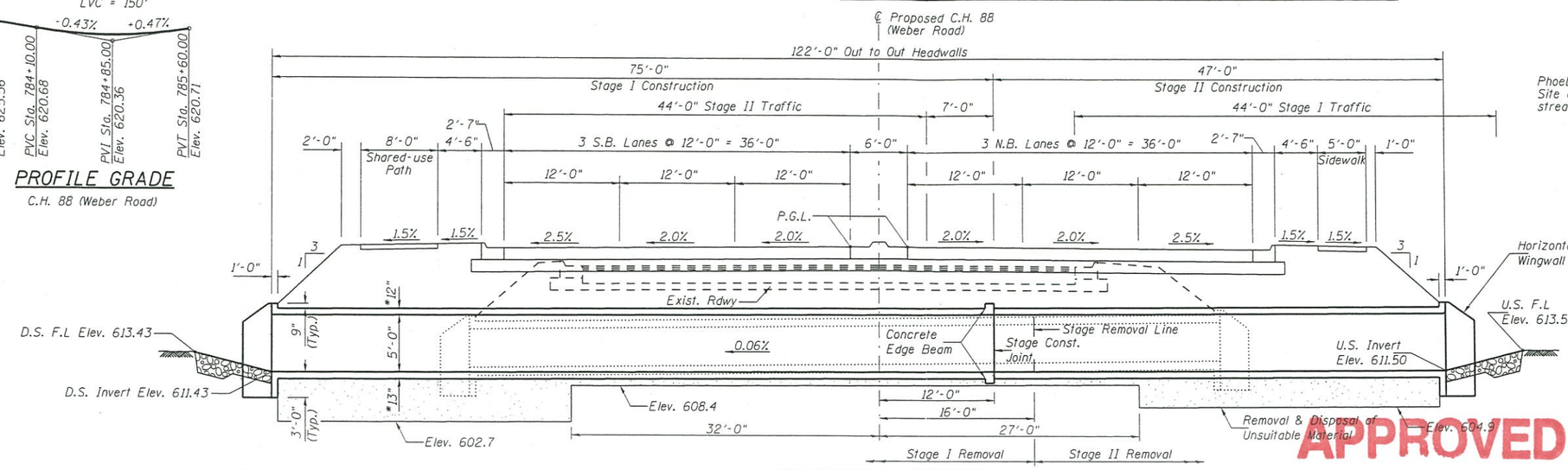

LONGITUDINAL SECTION

Looking North

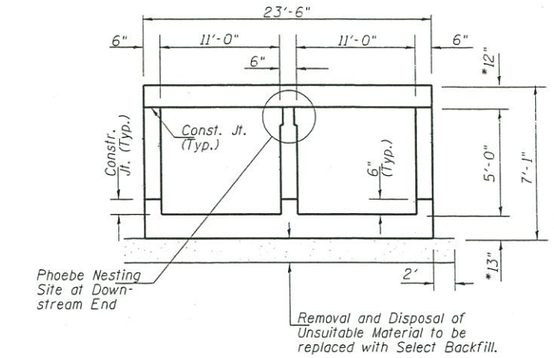

SECTION THRU BARREL

* Slab thickness may be refined during final design.

Design H.W.E. Elev. = 614.70
Design E.W.S.E. Elev. = 614.40

LOADING HL-93 W/ IL-120

Allow 50#/sq. ft. for future wearing surface.

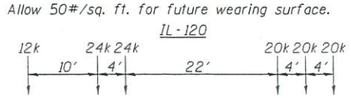

DESIGN SPECIFICATIONS

2014 AASHTO LRFD Bridge Design Specifications w/ 2015 & 2016 Interims

DESIGN STRESSES

FIELD UNITS
f'_c = 3,500 psi
f_y = 60,000 psi (reinforcement)

APPROVED
AUG 22 2016
AS A BASIS FOR PREPARATION OF DETAILED PLANS

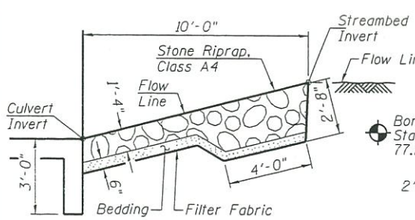

SECTION A-A

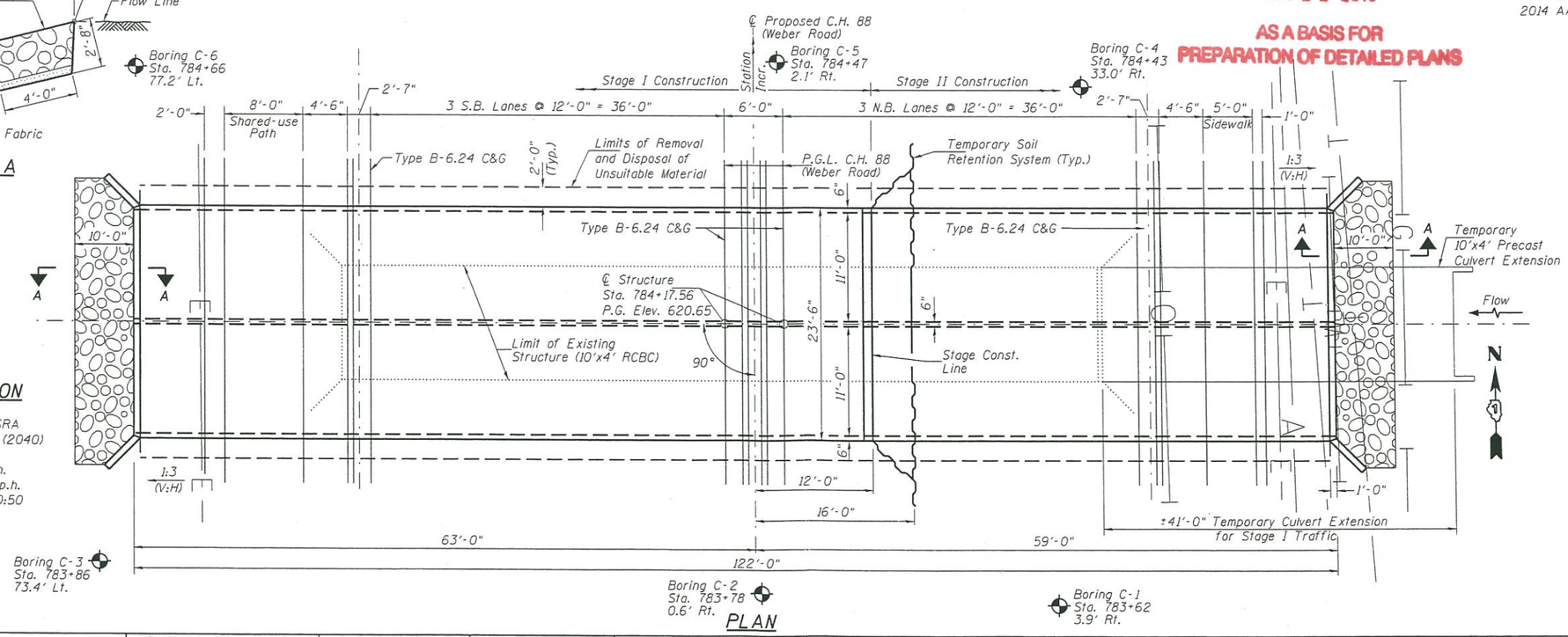

PLAN

HIGHWAY CLASSIFICATION

C.H. 88 (Weber Road)
Functional Class: Urban SRA
ADT: 39,200 (2010); 57,000 (2040)
ADTT: 3.0%
Design Speed: 45 m.p.h.
Posted Speed: 40 m.p.h.
Directional Distribution: 50:50

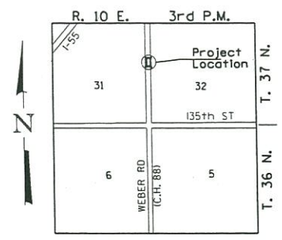

LOCATION SKETCH

GENERAL PLAN
WEBER ROAD (C.H. 88)
OVER LILY CACHE SLOUGH
F.A.I. ROUTE 55
SECTION 2013-052WRS
WILL COUNTY
STA. 784+17.56
STR. NO. 099-3409

Hutchison Engineering, Inc.
Jacksonville, Peoria & Shorewood, Illinois

USER NAME = $USER$	DESIGNED - JOH	REVISED -
PLOT SCALE = NONE	CHECKED - BAN	REVISED -
PLOT DATE = $DATE$	DRAWN - JCW	REVISED -
	CHECKED - BAN	REVISED -

WEBER ROAD (C.H. 88) OVER LILY CACHE SLOUGH

GENERAL PLAN
S.N. 099-3409
SHEET 1 OF 2 SHEETS

F.A.P. RTE.	SECTION	COUNTY	TOTAL SHEETS	SHEET NO.
55	2013-052WRS	WILL	1	2
		CONTRACT NO. 60X11		
		ILLINOIS FED. AID PROJECT		

V:\Bridge\3238.02 - Will\3238.02tslculv01.dgn

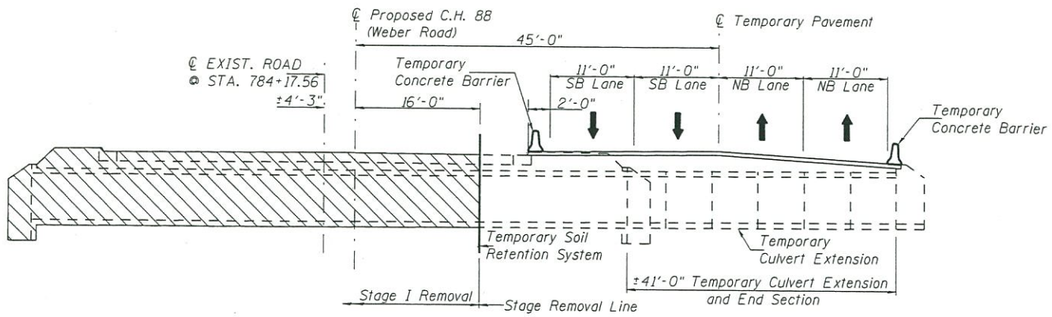

STAGE I REMOVAL

(Looking North)

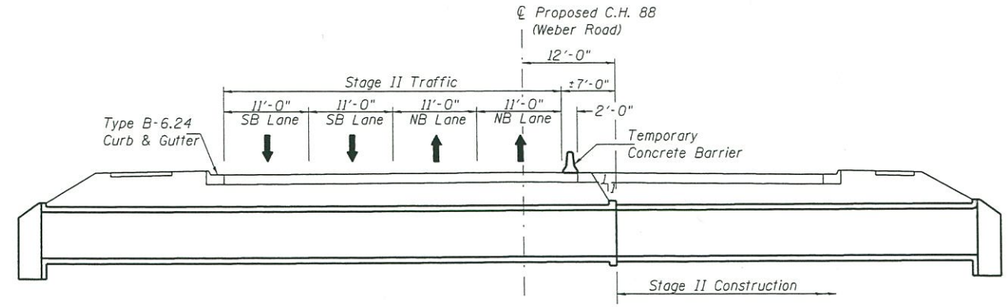

STAGE II CONSTRUCTION

(Looking North)

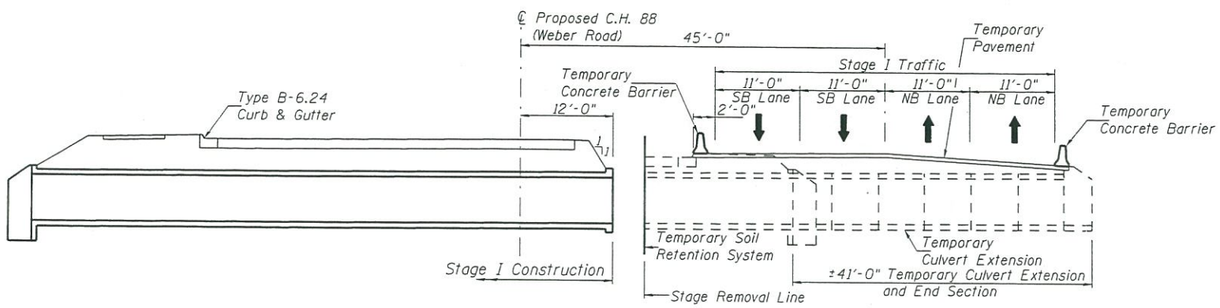

STAGE I CONSTRUCTION

(Looking North)

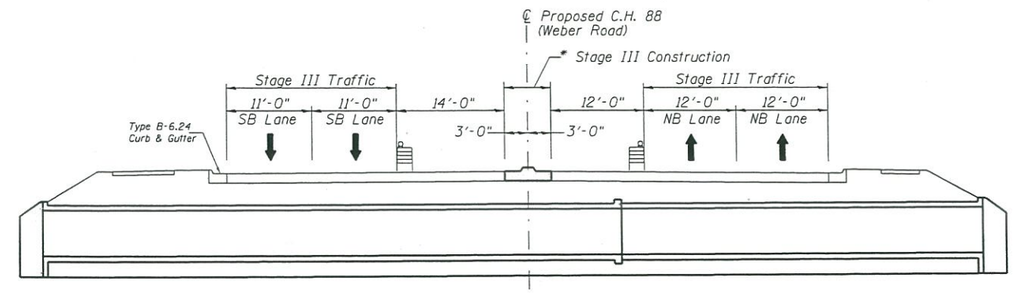

STAGE III CONSTRUCTION

(Looking North)

* Construct 6'-0" SM-6.12 Concrete
Median & adjacent pavement as required.

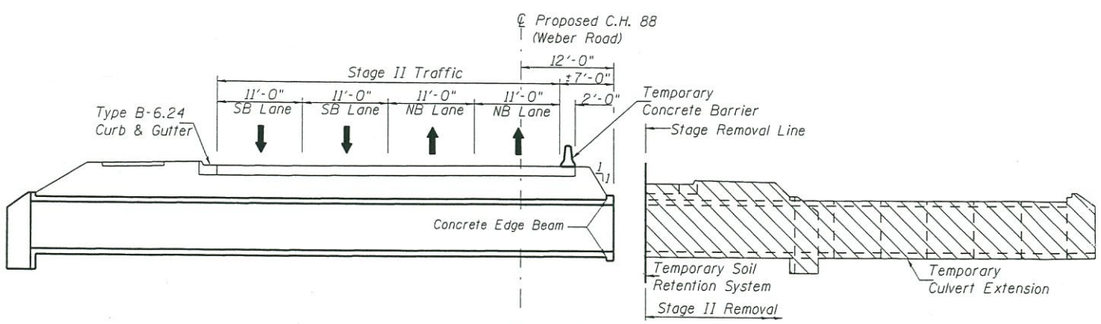

STAGE II REMOVAL

(Looking North)

APPROVED

APR 22 2013

AS A BASIS FOR
PREPARATION OF DETAILED PLANS

Hutchison Engineering, Inc. Jacksonville, Peoria & Shorewood, Illinois	USER NAME = $USER$	DESIGNED - JOH	REVISED -	WEBER ROAD (C.H. 88) OVER LILY CACHE SLOUGH	STAGE CONSTRUCTION – TYPICAL SECTIONS S.N. 099-3409	F.A.P. RTE.	SECTION	COUNTY	TOTAL SHEETS	SHEET NO.
	PLOT SCALE = NONE	CHECKED - BAN	REVISED -			55	2013-052WRS	WILL	2	2
	PLOT DATE = $DATE$	DRAWN - JCW	REVISED -					CONTRACT NO. 60X11		
		CHECKED - BAN	REVISED -		SHEET 2 OF 2 SHEETS		ILLINOIS FED. AID PROJECT			

V:\Bridge\3238.02 - Will\3238.02tslculv02.dgn