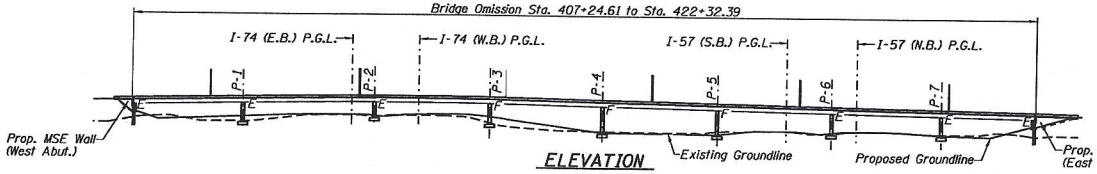

ELEVATION

APPROVED

OCT 06 2020

AS A BASIS FOR PREPARATION OF DETAILED PLANS

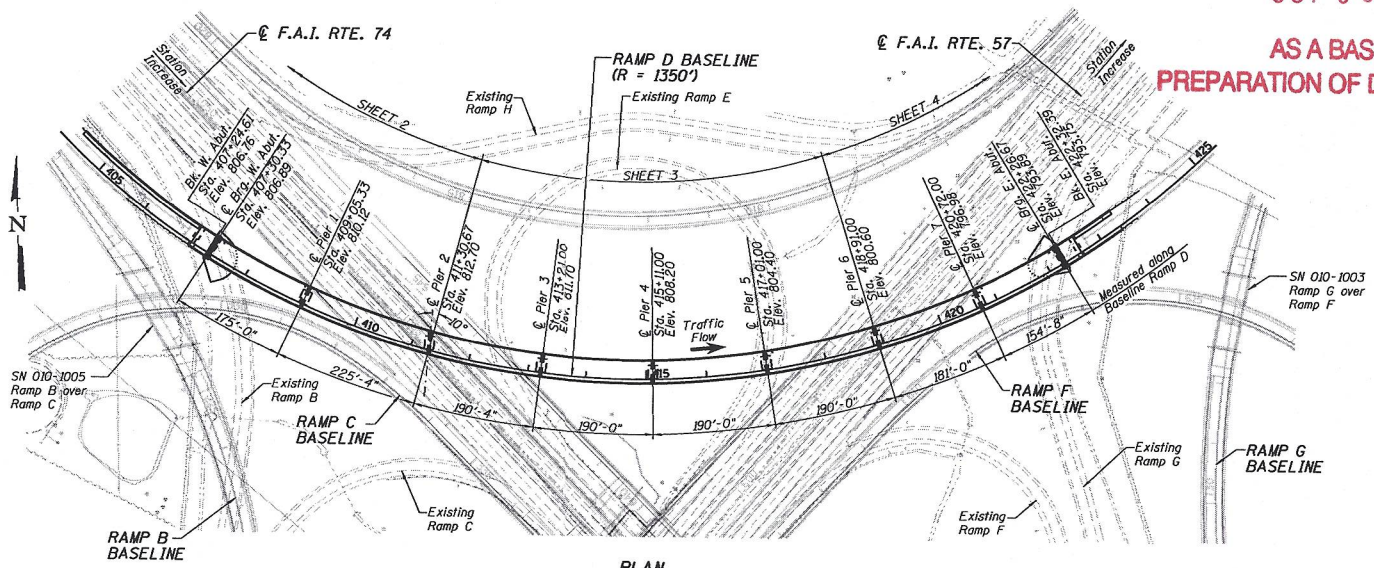

PLAN

(SEE SHEETS 2, 3 & 4 FOR ENLARGED PLANS)

Note:
Up to 1/4" may be ground off the bridge deck and the bridge approach slabs.

HIGHWAY CLASSIFICATION

Ramp D
Functional Class: Interstate (Ramp)
ADT: 500 (2013); 1000 (2040)
ADTT: 95 (2013); 190 (2040)
DHV: 140 (2040)
Design Speed: 55 m.p.h.
Posted Speed: 55 m.p.h.
One-Way Traffic

F.A.P. Rte. 74 - I 74
Functional Class: Interstate
ADT: 38,900 (2013); 59,900 (2040)
ADTT: 4,832 (2013); 13,717 (2040)
DHV: 3,153 (2040)
Design Speed: 75 m.p.h.
Posted Speed: 70 m.p.h.
Two-Way Traffic
Directional Distribution: 50:50

F.A.P. Rte. 57 - I 57
Functional Class: Interstate
ADT: 32,400 (2013); 49,900 (2040)
ADTT: 4,572 (2013); 14,172 (2040)
DHV: 2,113 (2040)
Design Speed: 75 m.p.h.
Posted Speed: 70 m.p.h.
Two-Way Traffic
Directional Distribution: 50:50

DESIGN SPECIFICATIONS

2017 AASHTO LRFD 8th Edition, Bridge Design Specifications

LOADING HL-93

Allow 50 psf for future wearing surface

DESIGN STRESSES

FIELD UNITS

f'c = 3,500 psi (Cast-in-Place)
f'c = 4,000 psi (Superstructure Concrete)
fy = 60,000 psi (Reinforcement)
fy = 50,000 psi (M270 Grade 50)*

*All structural steel shall be metalized or galvanized.

**Stainless steel reinforcement for the deck to be incorporated in final design

SEISMIC DATA

Seismic Performance Zone (SPZ) = 1
Design Spectral Acceleration at 1.0 sec (SD1) = 0.135g
Design Spectral Acceleration at 0.2 sec (SDS) = 0.233g
Soil Site Class = D

CURVE DATA

(RAMP D)

PI Sta. = 421+90.36
Δ = 109° 32' 31" (Lt.)
D = 4° 14' 39"
R = 1,350.00'
T = 1,911.69'
L = 2,581.02'
E = 990.32'
e = 7.4%
T.R. = N/A
S.E. RUN = 250'
P.C. Sta. = 402+78.67
P.T. Sta. = 428+59.69

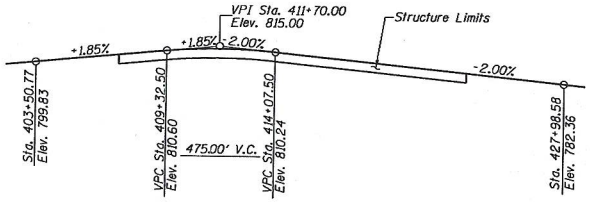

PROPOSED RAMP D PROFILE

Note:
The profile grade shows the final elevations after grinding.

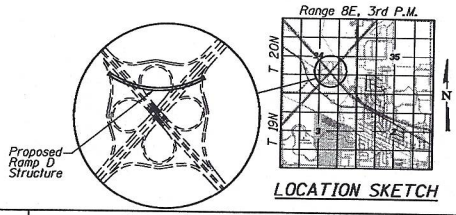

LOCATION SKETCH

GENERAL PLAN
RAMP D OVER
F.A.I. RTE. 74 AND F.A.I. RTE. 57
SECTION (10-34-1) HBK
CHAMPAIGN COUNTY
STATION 414+78.50
STRUCTURE NO. 010-1004

CMT	USER NAME = Denise Herrera	DESIGNED L.M.	REVISED
	\\D570897-TSL-IDOT\Ramp D over I74 and I57	CHECKED R.J.K.	REVISED
	PLOT SCALE =	DRAWN G.L.D. and D.H.	REVISED
	PLOT DATE = May 11, 2020	CHECKED L.M.	REVISED

STATE OF ILLINOIS
DEPARTMENT OF TRANSPORTATION

I-57 & I-74 INTERCHANGE
STRUCTURE NO. 010-1004 – GENERAL PLAN & ELEVATION

SHEET NO. 1 OF 9 SHEETS

F.A.I. RTE.	SECTION	COUNTY	TOTAL SHEETS	SHEET NO.
74 & 57	(10-34-1) HBK	CHAMPAIGN		
		CONTRACT NO. 70B99		
		ILLINOIS FED. AID PROJECT		

L:\IDOT\108592\Drawings\CADD_Sheets\Structural Sheets\TSL\...

Bench Marks:
Chiseled "□" on top of N.W. corner of light pole foundation #50-107 on existing Ramp G, Sta. 1068+46.46 Elev. 769.173

Existing Structure: None

No Salvage

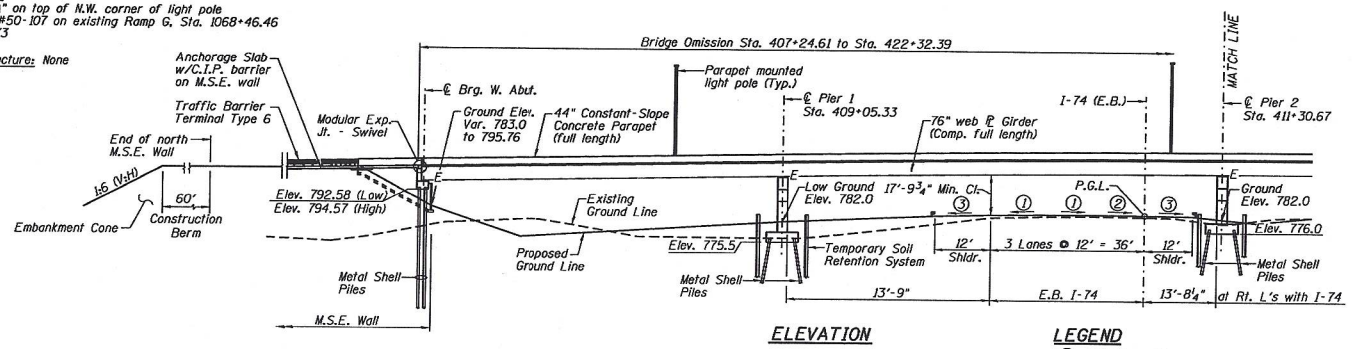

ELEVATION

LIGHT POLE LOCATIONS

STATION	**OFFSET
406+13.00	32.33' Lt.
408+56.07	32.33' Lt.
411+02.74	32.33' Lt.
413+48.41	32.33' Lt.
415+92.74	32.33' Lt.
418+38.60	32.33' Lt.
420+84.48	32.33' Lt.
423+22.00	32.33' Lt.

**From ℄ Ramp D

Note: Pole height is 45 ft. with an 8 ft. mast arm. Bolt circle diameter is 15 in.

LEGEND

① 1.5% Cross Slope
② 2.0% Cross slope
③ 4.0% Cross Slope

APPROVED

OCT 06 2020

AS A BASIS FOR PREPARATION OF DETAILED PLANS

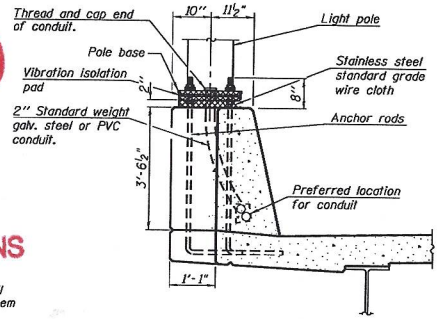

PARAPET MOUNTED LIGHT POLE

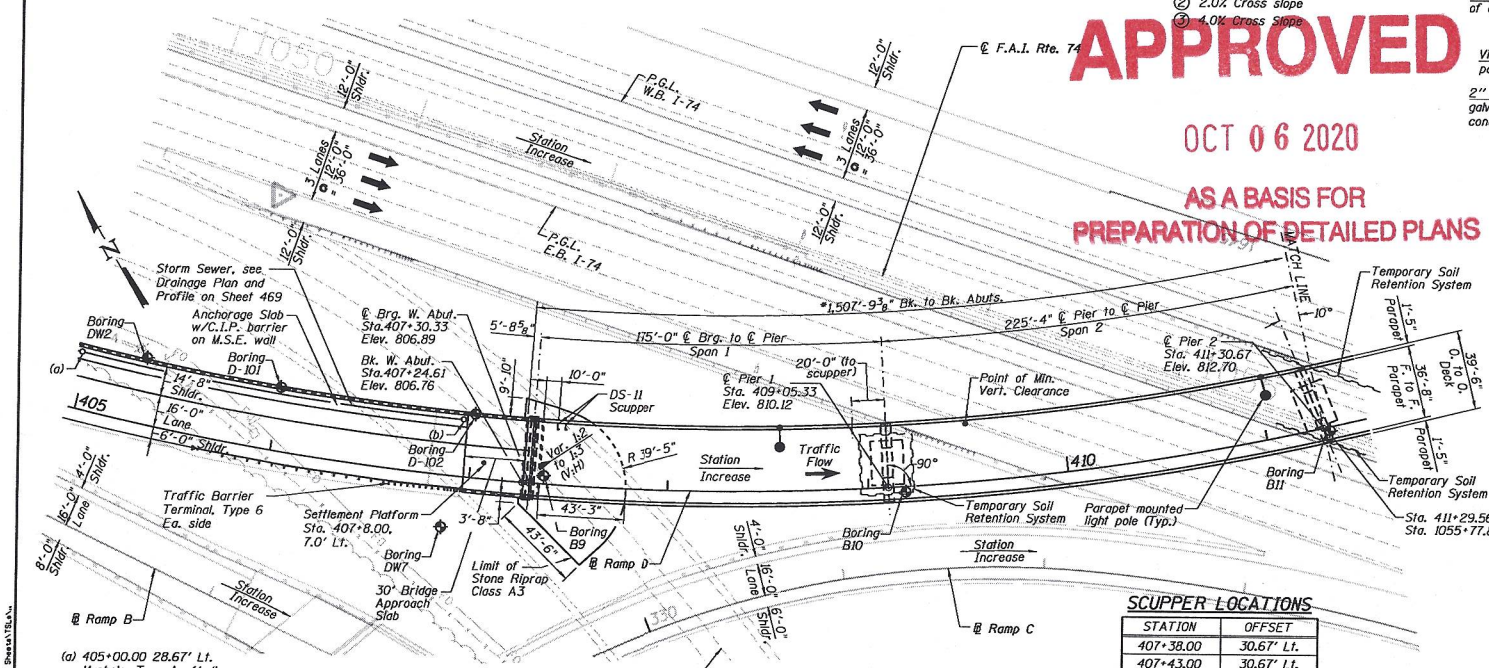

(a) 405+00.00 28.67' Lt. Manhole, Type A, 4' dia. Type 20 Frame and Grate. See Drainage Plan and Profile Sheet 469.

(b) Sta. 406+87.00, 28.67' Lt. Manhole, Type A, 4' dia. Type 20 Frame and Grate. See Drainage Plan and Profile Sheet 469.

*Measured along ℄ Ramp D with all abutments & piers radial to alignment except Pier 2.

PLAN

SCUPPER LOCATIONS

STATION	OFFSET
407+38.00	30.67' Lt.
407+43.00	30.67' Lt.
409+00.00	30.67' Lt.
413+11.00	30.67' Lt.
415+00.00	30.67' Lt.
416+90.00	30.67' Lt.
420+82.00	30.67' Lt.
422+09.00	30.67' Lt.
422+14.00	30.67' Lt.

SOIL BORING LOCATIONS

Boring No.	Station	Offset	Northing	Easting
B9	407+36.98	4.09' Lt.	1267740.170	997355.733
B10	409+18.57	2.69' Rt.	1267645.173	997510.376
B11	411+31.42	1.77' Rt.	1267569.508	997709.458
D-101	406+00.00	31.7' Lt.	1267842.199	997262.973
D-102	407+00.00	31.7' Lt.	1267783.483	997340.973
DW2	405+30.00	33.0' Lt.	1267887.625	997211.933
DW7	406+88.60	25.9' Rt.	1267742.892	997298.552

NOTES:

1. Existing Outer Ramp B shall be relocated not to impede W. Abutment construction.
2. ℄ Ramp D elevations shown are prior to grinding.

L:\ND01\108868\D-ex\CADD_Sheets\Structural Sheets\TB6.dgn

CMT

USER NAME = Denise Herrera	DESIGNED	L.M.	REVISED
\D578897-TSL-(1)_Ramp D over I74 and I57.dgn	CHECKED	R.J.K.	REVISED
PLOT SCALE =	DRAWN	G.L.D. and D.H.	REVISED
PLOT DATE = May 11, 2020	CHECKED	L.M.	REVISED

STATE OF ILLINOIS
DEPARTMENT OF TRANSPORTATION

I-57 & I-74 INTERCHANGE
STRUCTURE NO. 010-1004 - GENERAL PLAN I

SHEET NO. 2 OF 9 SHEETS

F.A.I. RTE.	SECTION	COUNTY	TOTAL SHEETS	SHEET NO.
74 & 57	(10-34-1) HBK	CHAMPAIGN		

CONTRACT NO. 70B99

ILLINOIS FED. AID PROJECT

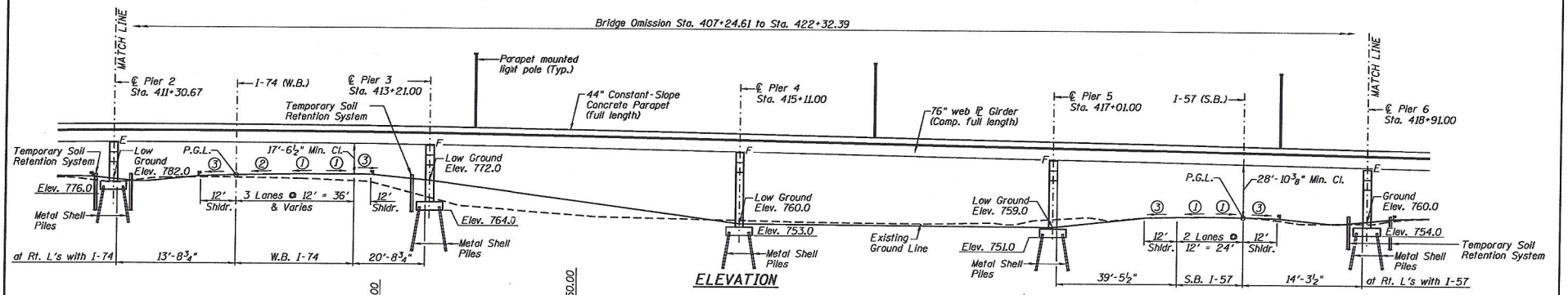

ELEVATION

LEGEND
1. 1.5% Cross Slope
2. 2.0% Cross slope
3. 4.0% Cross Slope

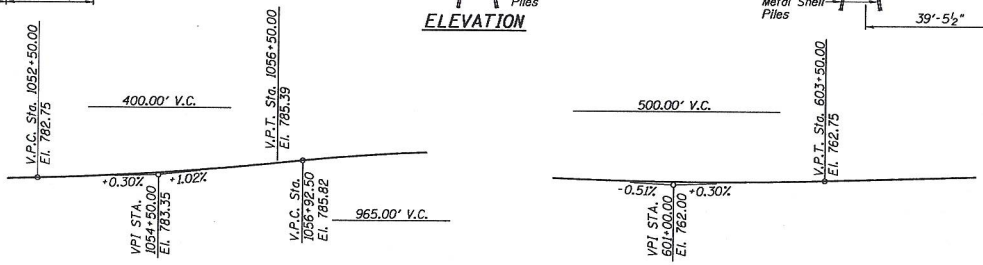

PROPOSED F.A.I. RTE. 74 PROFILE

PROPOSED F.A.I. RTE. 57 PROFILE

APPROVED

OCT 06 2020

AS A BASIS FOR PREPARATION OF DETAILED PLANS

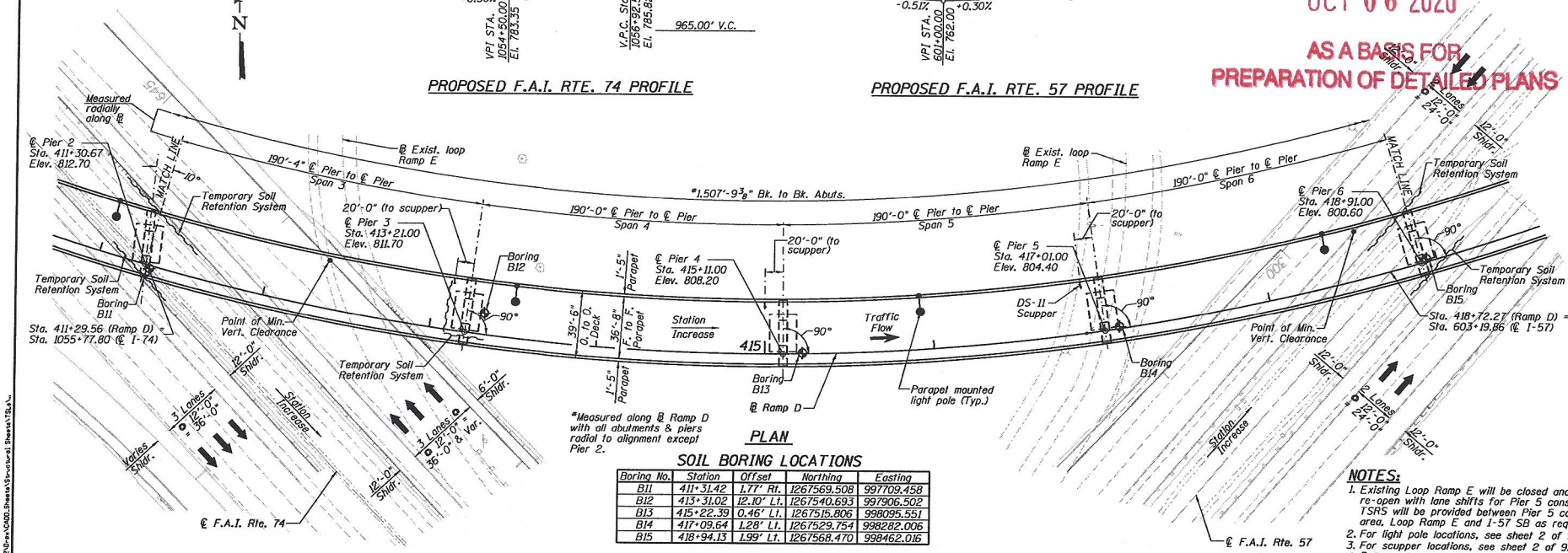

*Measured along ℄ Ramp D with all abutments & piers radial to alignment except Pier 2.

PLAN

SOIL BORING LOCATIONS

Boring No.	Station	Offset	Northing	Easting
B11	411+31.42	1.77' Rt.	1267569.508	997709.458
B12	413+31.02	12.10' Lt.	1267540.693	997906.502
B13	415+22.39	0.46' Lt.	1267515.806	998095.551
B14	417+09.64	1.28' Lt.	1267529.754	998282.006
B15	418+94.13	1.99' Lt.	1267568.470	998462.016

NOTES:
1. Existing Loop Ramp E will be closed and re-open with lane shifts for Pier 5 constr. TSRS will be provided between Pier 5 constr. area, Loop Ramp E and I-57 SB as required.
2. For light pole locations, see sheet 2 of 9.
3. For scupper locations, see sheet 2 of 9.
4. @ Ramp D elevations are shown prior to grinding.

CMT

USER NAME = Denise Herrera	DESIGNED L.M.	REVISED	
...\D578897-TSL-121_Ramp D over I74 and I57.dgn	CHECKED R.J.K.	REVISED	
PLOT SCALE =	DRAWN G.L.D. and D.H.	REVISED	
PLOT DATE = May 11, 2020	CHECKED L.M.	REVISED	

STATE OF ILLINOIS
DEPARTMENT OF TRANSPORTATION

I-57 & I-74 INTERCHANGE
STRUCTURE NO. 010-1004 - GENERAL PLAN II

SHEET NO. 3 OF 9 SHEETS

F.A.I. RTE.	SECTION	COUNTY	TOTAL SHEETS	SHEET NO.
74 & 57	(10-34-1) HBK	CHAMPAIGN		
		CONTRACT NO. 70B99		
		ILLINOIS FED. AID PROJECT		

L:\DOT\1086882-D-rev\CADD_Sheets\Structural Sheets\TSL4.dgn

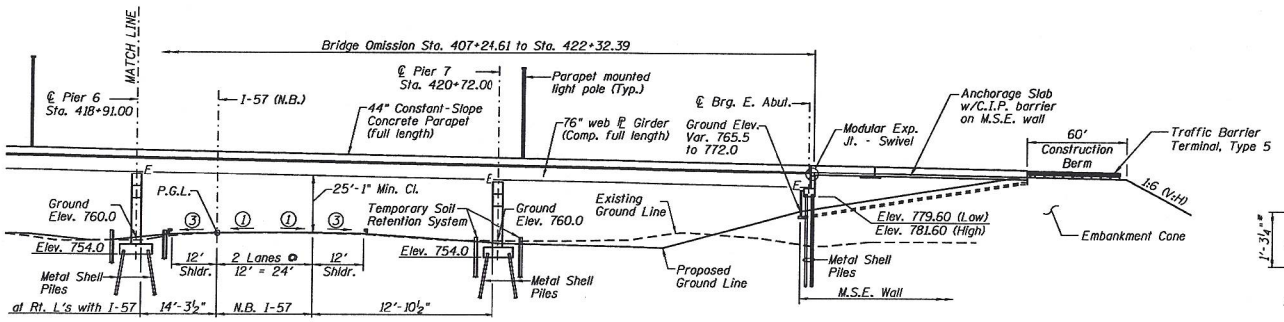

ELEVATION

LEGEND

1. 1.5% Cross Slope
2. 2.0% Cross slope
3. 4.0% Cross Slope

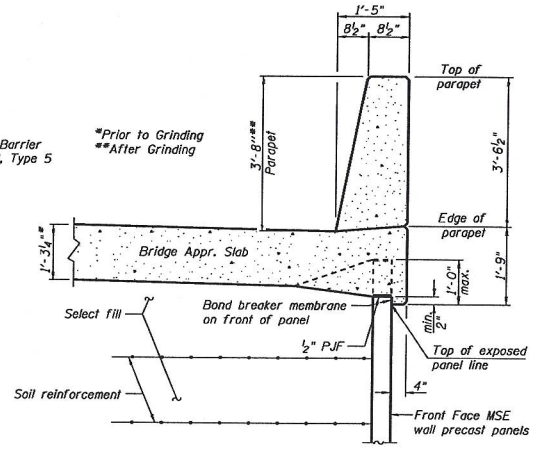

SECTION THRU BRIDGE APPROACH SLAB

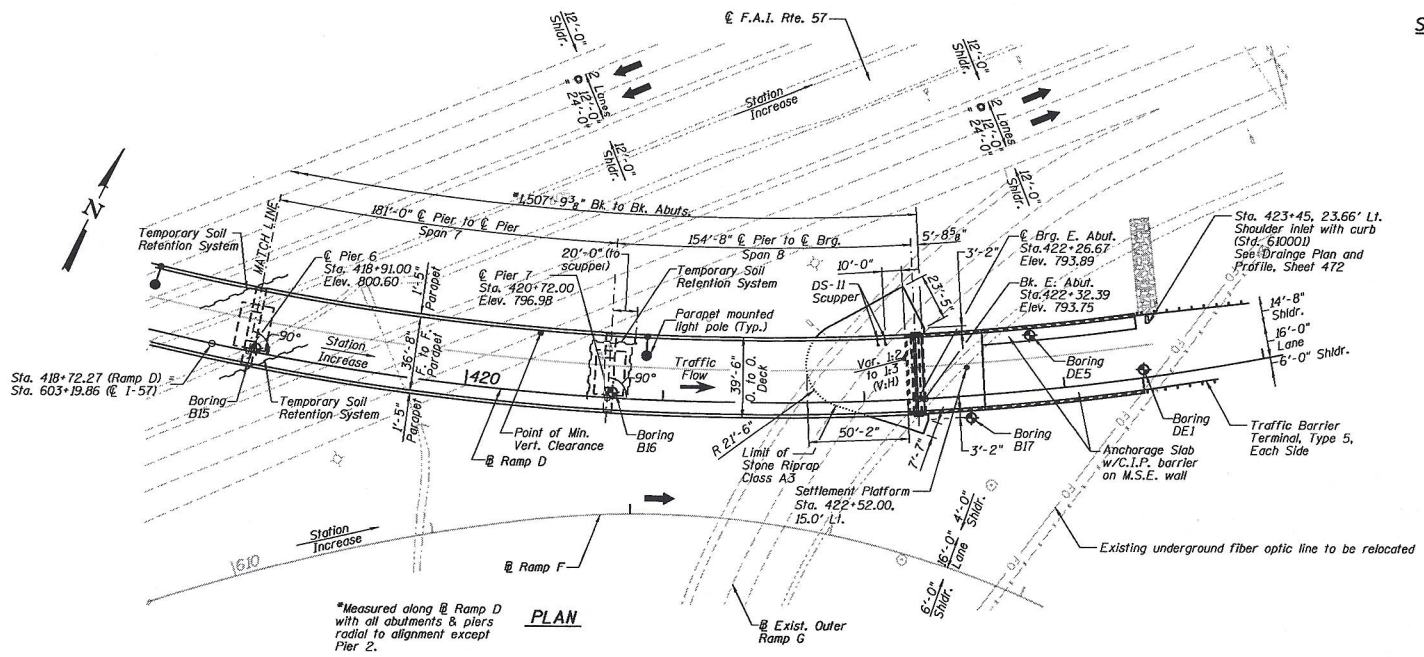

*Measured along @ Ramp D with all abutments & piers radial to alignment except Pier 2.

PLAN

APPROVED

OCT 06 2020

AS A BASIS FOR PREPARATION OF DETAILED PLANS

SOIL BORING LOCATIONS

Boring No.	Station	Offset	Northing	Easting
B15	418+94.13	1.99' Lt.	1267568.470	998462.016
B16	420+74.44	2.84' Lt.	1267629.768	998631.110
B17	422+52.79	10.93' Rt.	1267699.443	998796.285
DE1	423+40.00	4.00' Lt.	1267759.464	998861.577
DE5	422+85.00	27.50' Lt.	1267748.968	998803.299

NOTE:

1. Existing Outer Ramp G shall be relocated not to impede the E. Abut. construction.
2. For light pole locations, see sheet 2 of 9.
3. For scupper locations, see sheet 2 of 9.
4. @ Ramp D elevations shown are prior to grinding.

L:\2071\1868682\Drawings\CADD_Sheets\Structural Sheets\TSL_a.dgn

CMT

USER NAME = Denise Herrera	DESIGNED L.M.	REVISED	
...\0578897-TSL-(3)_Ramp D over I74 and I57.dgn	CHECKED R.J.K.	REVISED	
PLOT SCALE =	DRAWN G.L.D. and D.H.	REVISED	
PLOT DATE = May 11, 2020	CHECKED L.M.	REVISED	

STATE OF ILLINOIS
DEPARTMENT OF TRANSPORTATION

I-57 & I-74 INTERCHANGE
STRUCTURE NO. 010-1004 – GENERAL PLAN III
SHEET NO. 4 OF 9 SHEETS

F.A.I. RTE.	SECTION	COUNTY	TOTAL SHEETS	SHEET NO.
74 & 57	(10-34-1) HBK	CHAMPAIGN		
		CONTRACT NO. 70B99		
		ILLINOIS FED. AID PROJECT		

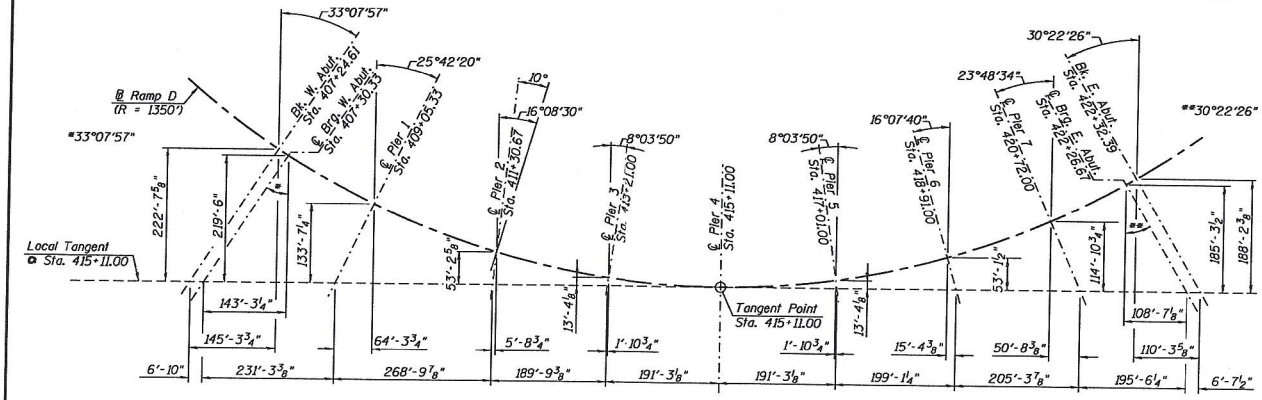

OFFSET SKETCH

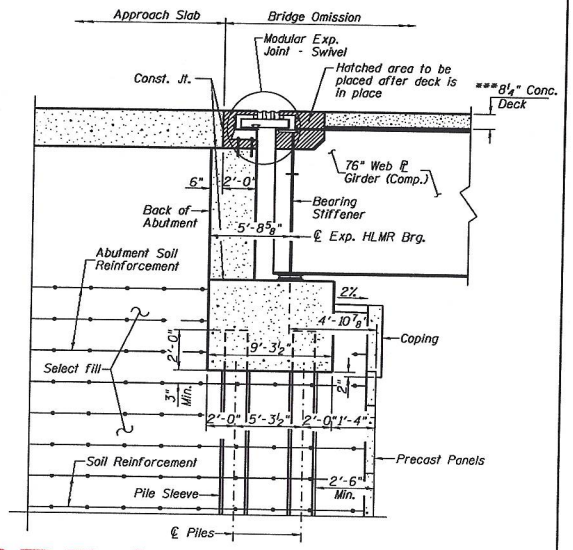

SECTION THRU ABUTMENT

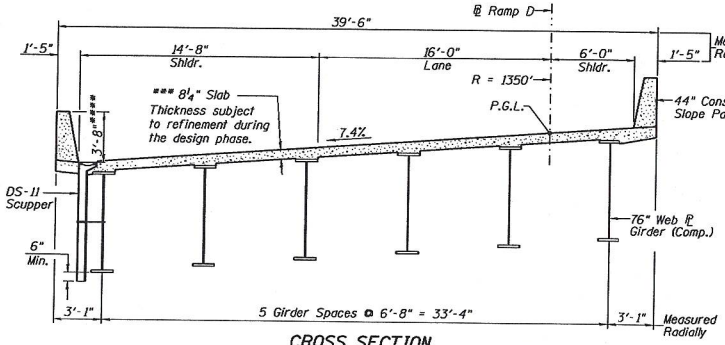

CROSS SECTION
(Looking Upstation)

***Prior to Grinding
****After Grinding

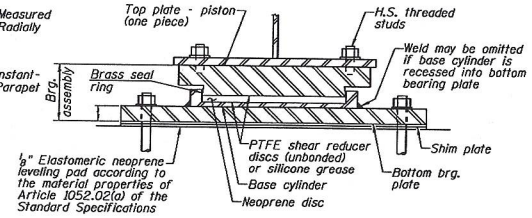

FIXED HLMR BEARING
Piers 3, 4 & 5

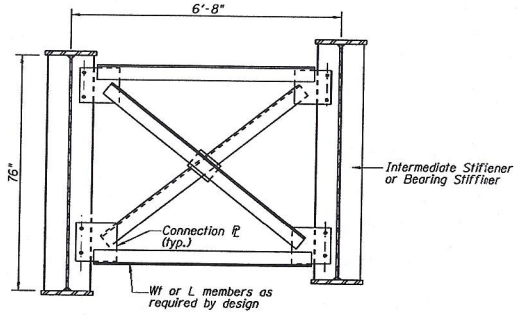

INTERIOR CROSS FRAME

*As alternates to the bolted connection shown, the guide bars may be connected to the top bearing plate by groove welds or the guide bars and top bearing plate may be fabricated as a single piece.

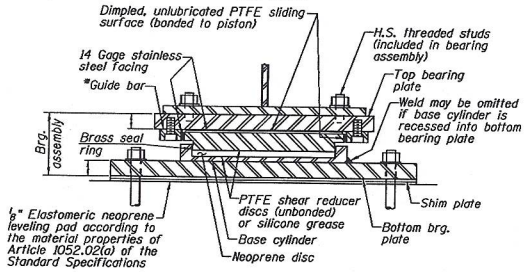

GUIDED EXPANSION HLMR BEARING
W. Abut., Piers 1, 2, 6 & 7, and E. Abut.

APPROVED
OCT 06 2020
AS A BASIS FOR PREPARATION OF DETAILED PLANS

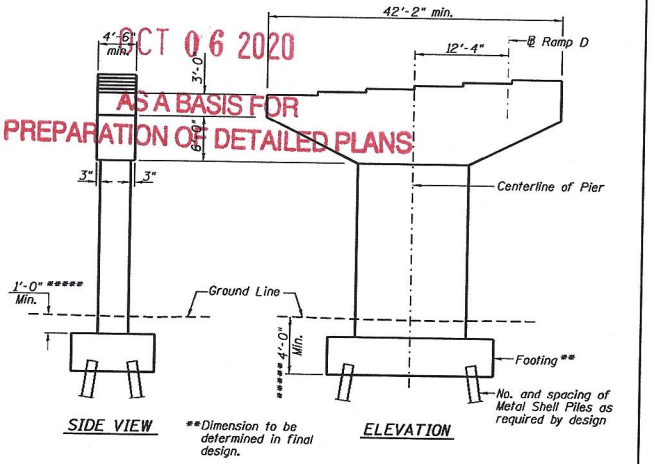

SIDE VIEW
**Dimension to be determined in final design.
ELEVATION

PIER 1 THRU PIER 7 SKETCH
(Looking Upstation)

***** For footing thicknessse greater than 3.0', bottom of footing shall be established so that there is a minimum of 1.0' of soil above top of footing.

L:\2017\1186882\Drawings\CADD Sheets\Structural Sheets\TSL.dwg

CMT	USER NAME = Denise Herrera	DESIGNED L.M.	REVISED	STATE OF ILLINOIS DEPARTMENT OF TRANSPORTATION
	...\0578897-TSL-(4)_Ramp D over I74 and I57.dgn	CHECKED R.J.K.	REVISED	
	PLOT SCALE =	DRAWN G.L.D. and D.H.	REVISED	
	PLOT DATE = May 11, 2020	CHECKED L.M.	REVISED	

I-57 & I-74 INTERCHANGE
STRUCTURE NO. 010-1004 – GENERAL DETAILS
SHEET NO. 5 OF 9 SHEETS

F.A.I. RTE.	SECTION	COUNTY	TOTAL SHEETS	SHEET NO.
74 & 57	(10-34-1) HBK	CHAMPAIGN		
		CONTRACT NO. 70B99		
		ILLINOIS FED. AID PROJECT		

Bench Marks:
Chiseled "□" on top of N.W. corner of light pole foundation #50-107 on exist. Ramp G, Sta. 1068+46.46
Elev. 769.173

Existing Structure: None

APPROVED
OCT 06 2020
AS A BASIS FOR PREPARATION OF DETAILED PLANS

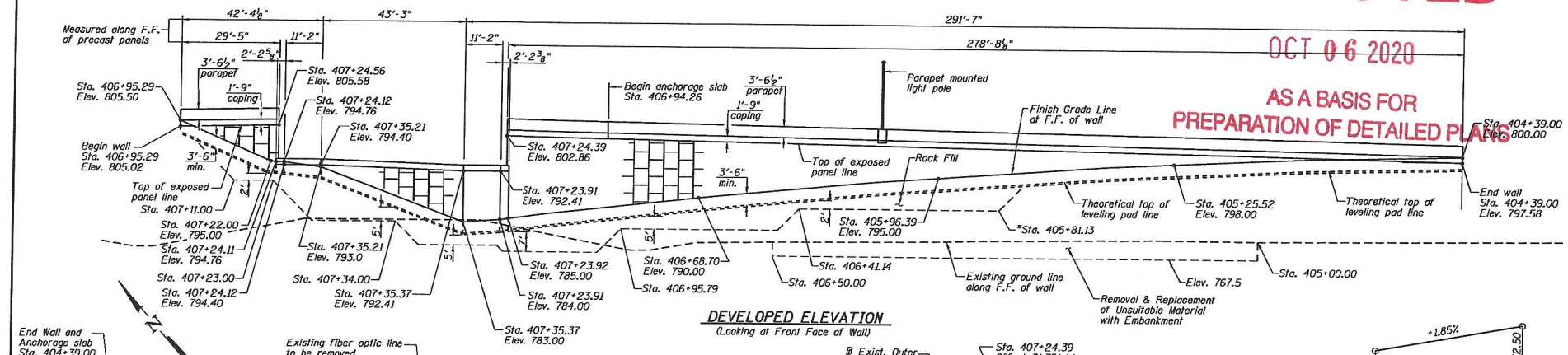

DEVELOPED ELEVATION
(Looking at Front Face of Wall)

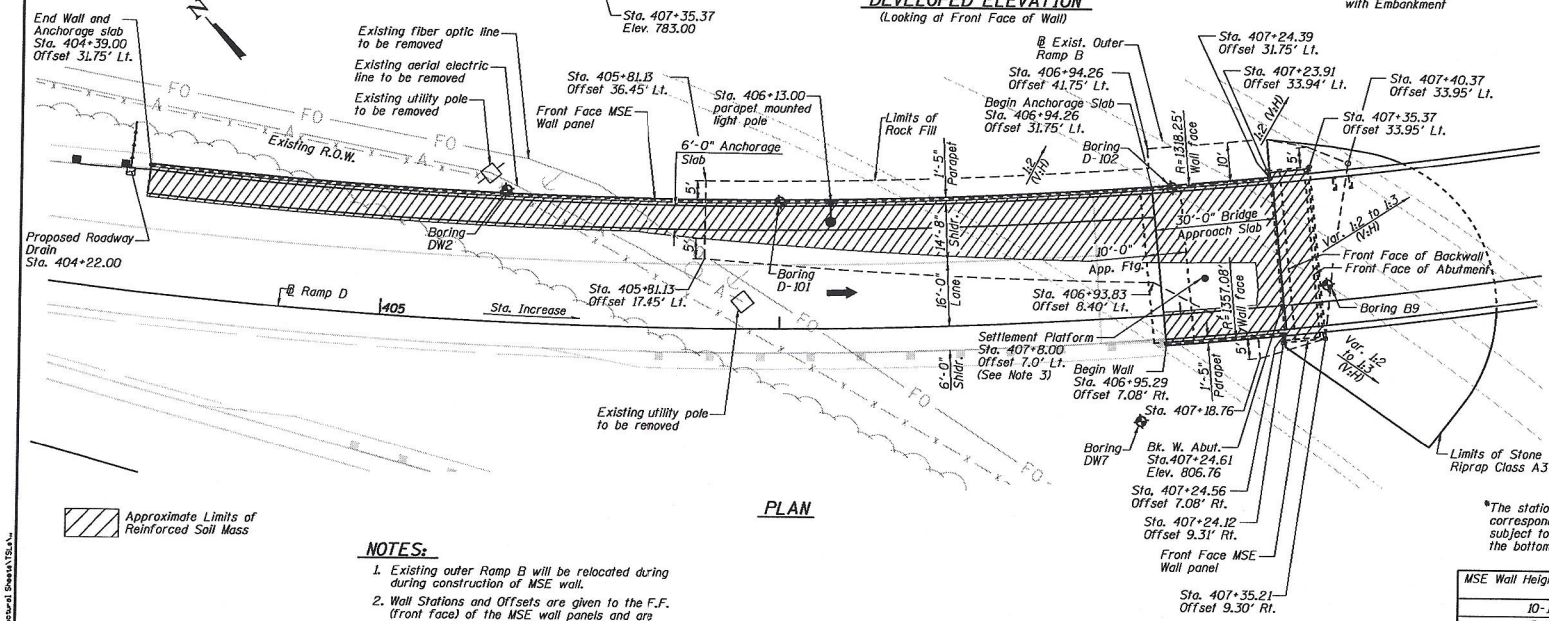

PLAN

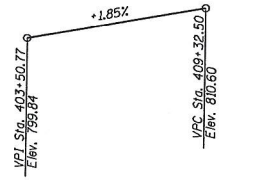

PROPOSED RAMP D PROFILE
(Along Ramp D @)

Note:
The profile grade shows the final elevations after grinding

CURVE DATA
(RAMP D)

PI Sta. = 421+90.36
Δ = 109° 32' 31" (Lt.)
D = 4° 14' 39"
R = 1,350.00'
T = 1,911.69'
L = 2,581.02'
E = 990.32'
e = 7.4%
T.R. = N/A
S.E. RUN = 250'
P.C. Sta. = 402+78.67
P.T. Sta. = 428+59.69

*The stationings for the different depths of Rock Fill corresponding to different MSE wall height intervals are subject to change during construction based on how the bottom of the MSE wall will be stepped in the field.

MSE Wall Height Interval (ft.)	Thickness of Rock Fill below Mse Reinforced Mass (ft.)
10-15	2
15-20	5
20-25	7
25-30	10
30-35	12

NOTES:

1. Existing outer Ramp B will be relocated during during construction of MSE wall.
2. Wall Stations and Offsets are given to the F.F. (front face) of the MSE wall panels and are measured from Ramp D baseline.
3. See SGR for additional information regarding Settlement Platform. Location and monitoring requirements subject to refinement in final design. Install according to Art. 204.06 of the Standard Specifications.

CMT

USER NAME = Denise Herrera	DESIGNED L.M.	REVISED	
\\D378897-TSL-t5\Ramp D over I74 and I57	CHECKED R.J.K.	REVISED	
PLOT SCALE =	DRAWN G.L.D. and D.H.	REVISED	
PLOT DATE = May 11, 2020	CHECKED L.M.	REVISED	

STATE OF ILLINOIS
DEPARTMENT OF TRANSPORTATION

I-57 & I-74 INTERCHANGE
STRUCTURE NO. 010-1004 – WEST ABUTMENT MSE WALL
SHEET NO. 6 OF 9 SHEETS

F.A.I. RTE.	SECTION	COUNTY	TOTAL SHEETS	SHEET NO.
74 & 57	(10-34-1) HBK	CHAMPAIGN		
		CONTRACT NO. 70B99		
		ILLINOIS FED. AID PROJECT		

L:\ADT\11186862\Dwg\CADD_Sheets\Structural Sheets\TSL5.dwg

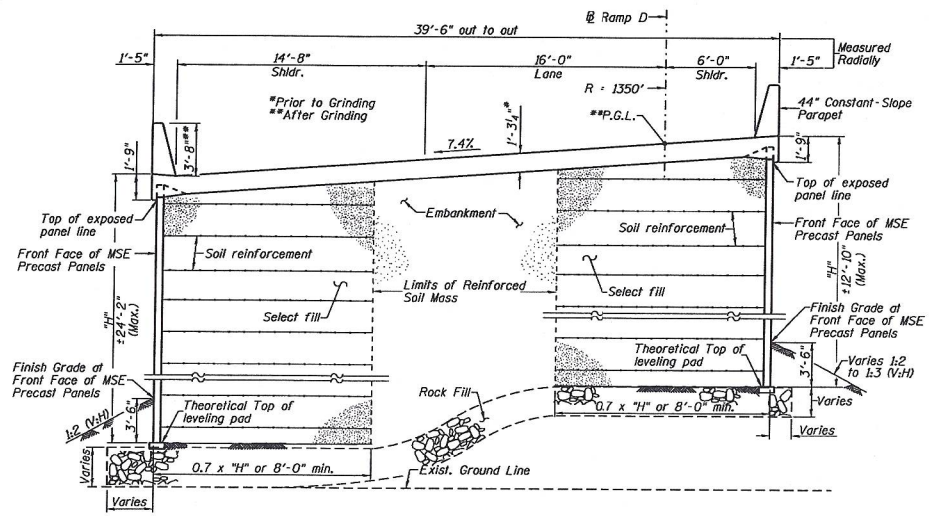

SECTION AT APPROACH SLAB

(Looking Upstation)

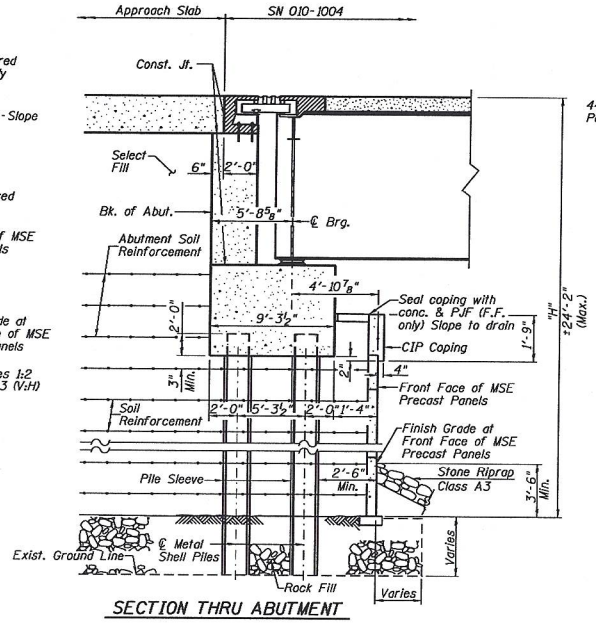

SECTION THRU ABUTMENT

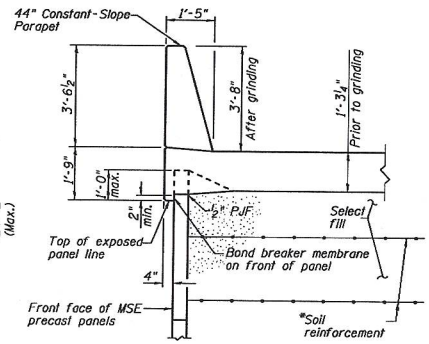

*The M.S.E. wall supplier's internal stability design shall account for the anchorage slab's bearing pressure surcharge of 1.0 ksf and horizontal sliding force of 0.5 kips/ft. of wall.

SECTION THRU CIP BARRIER AND ANCHORAGE SLAB ON PRECAST PANELS

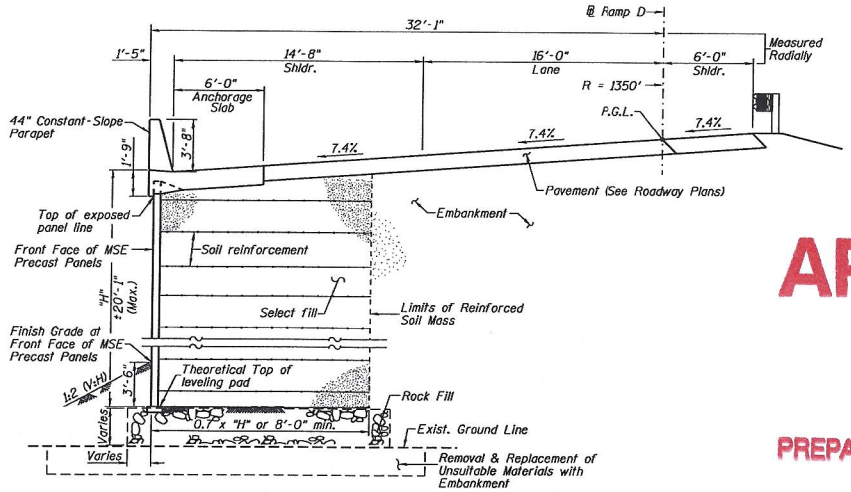

SECTION AT ROADWAY

(℄ Ramp D Sta 404+39.00 to Sta 406+94.26)

APPROVED

OCT 06 2020

AS A BASIS FOR PREPARATION OF DETAILED PLANS

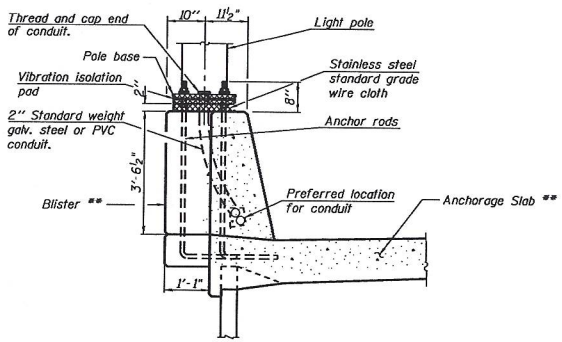

PARAPET MOUNTED LIGHT POLE

** MSE Wall supplier shall account for the anchorage slab's bearing pressure surcharge and horizontal sliding force to resists dead and live loads imposed by the light pole and blister.

L:\007\1186882\Drw\0000_Sheets\Structural Sheets\TSL.dgn

CMT	USER NAME = Denise Herrera	DESIGNED L.M.	REVISED	STATE OF ILLINOIS DEPARTMENT OF TRANSPORTATION	I-57 & I-74 INTERCHANGE STRUCTURE NO. 010-1004 – WEST ABUTMENT MSE WALL	F.A.I. RTE.	SECTION	COUNTY	TOTAL SHEETS	SHEET NO.
	...\D578897-TSL-(B)_Ramp D over I74 and I57.dgn	CHECKED R.J.K.	REVISED			74 & 57	(10-34-1) HBK	CHAMPAIGN		
	PLOT SCALE =	DRAWN G.L.D. and D.H.	REVISED					CONTRACT NO. 70B99		
	PLOT DATE = May 11, 2020	CHECKED L.M.	REVISED		SHEET NO. 7 OF 9 SHEETS			ILLINOIS FED. AID PROJECT		

Bench Marks:
Chiseled "□" on top of N.W. corner of light pole foundation #50-107 on exist. Ramp G, Sta. 1068+46.46
Elev. 769.173

Existing Structure: None

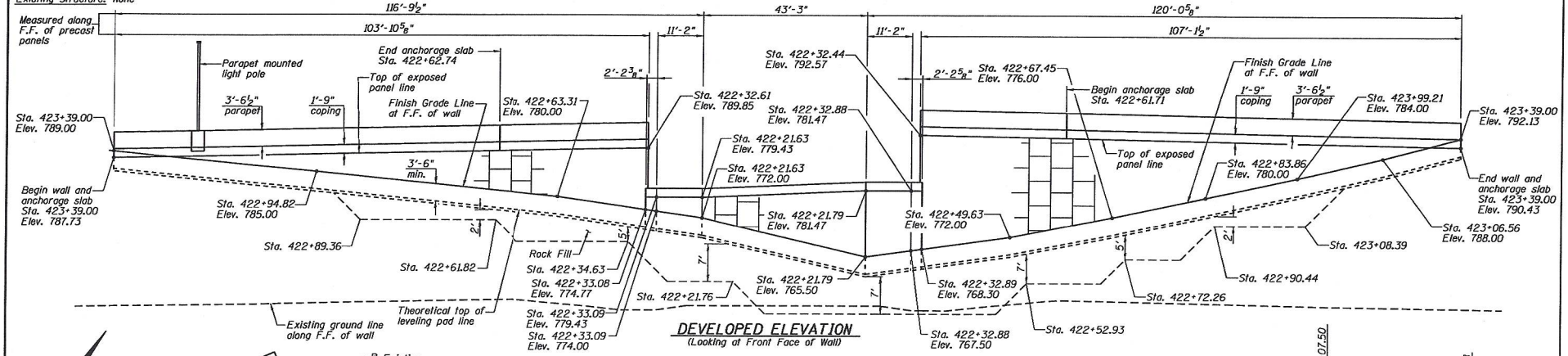

DEVELOPED ELEVATION
(Looking at Front Face of Wall)

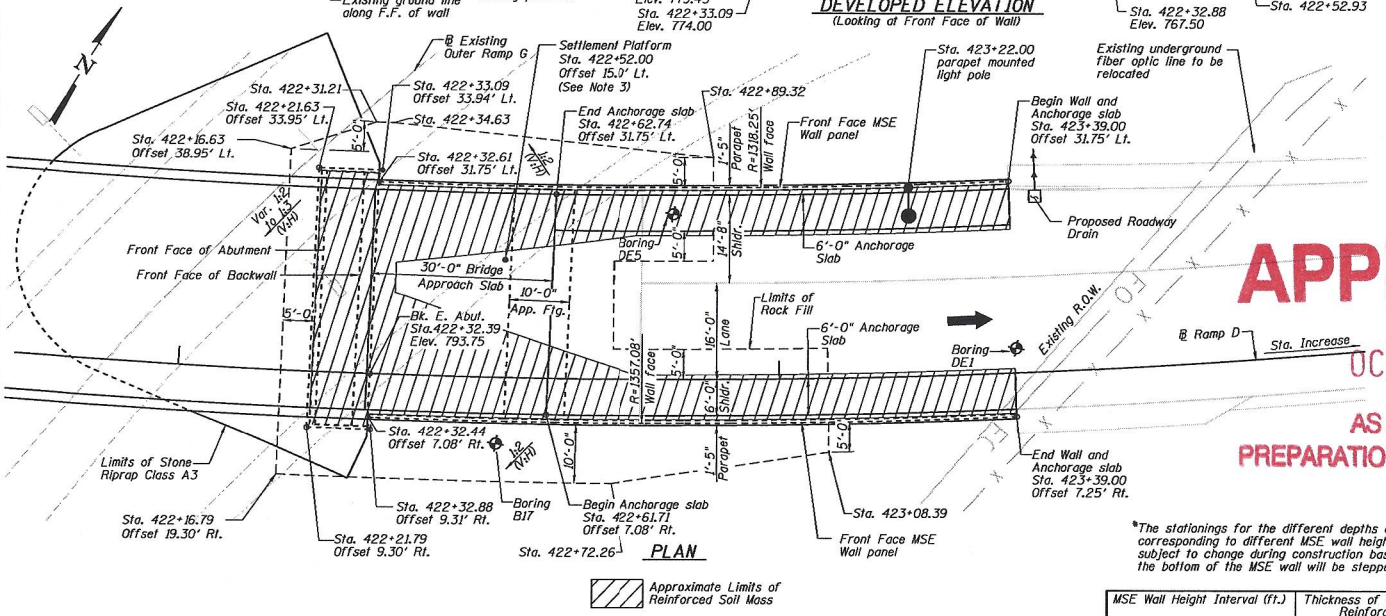

PLAN

Approximate Limits of Reinforced Soil Mass

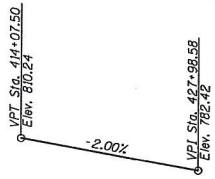

PROPOSED RAMP D PROFILE

Note:
The profile grade shows the final elevations after grinding.

APPROVED
OCT 06 2020
AS A BASIS FOR PREPARATION OF DETAILED PLANS

CURVE DATA
(RAMP D)

PI Sta. = 421+90.36
Δ = 109° 32' 31" (Lt.)
D = 4° 14' 39"
R = 1,350.00'
T = 1,911.69'
L = 2,581.02'
E = 990.32'
e = 7.4%
T.R. = N/A
S.E. RUN = 250'
B.C. Sta. = 402+78.67
E.T. Sta. = 428+59.69

*The stationings for the different depths of Rock Fill corresponding to different MSE wall height intervals are subject to change during construction based on how the bottom of the MSE wall will be stepped in the field.

MSE Wall Height Interval (ft.)	Thickness of Rock Fill below Mse Reinforced Mass (ft.)
10-15	2
15-20	5
20-25	7
25-30	10
30-35	12

NOTES:

1. Existing outer Ramp G will be relocated during construction of MSE wall.
2. Wall Stations and Offsets are given to the F.F. (front face) of the MSE wall panels and are measured from Ramp D baseline.
3. See SGR for additional information regarding Settlement Platform. Location and monitoring requirements subject to refinement in final design. Install according to Art. 204.06 of the Standard Specifications.

L:\2017\1185882\Dgn\CADD_Sheets\Structural Sheets\TSL4.dgn

CMT	USER NAME = Denise Herrera	DESIGNED L.M.	REVISED	STATE OF ILLINOIS DEPARTMENT OF TRANSPORTATION	I-57 & I-74 INTERCHANGE STRUCTURE NO. 010-1004 – EAST ABUTMENT MSE WALL	F.A.I. RTE.	SECTION	COUNTY	TOTAL SHEETS	SHEET NO.
	\D5788197-TSL-(7)_Ramp D over I74 and I57.dgn	CHECKED R.J.K.	REVISED			74 & 57	(10-34-1) HBK	CHAMPAIGN		
	PLOT SCALE =	DRAWN G.L.D. and D.H.	REVISED		SHEET NO. 8 OF 9 SHEETS			CONTRACT NO. 70B99		
	PLOT DATE = May 11, 2020	CHECKED L.M.	REVISED					ILLINOIS FED. AID PROJECT		

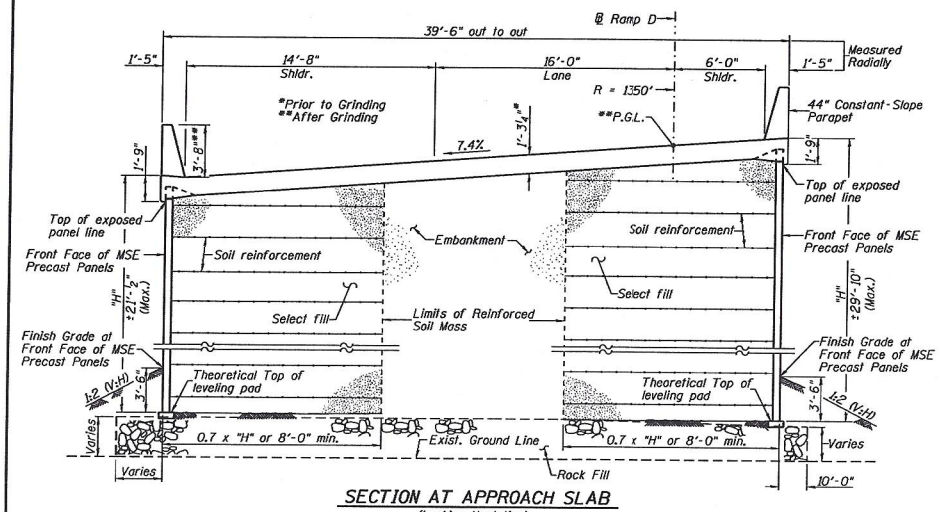

SECTION AT APPROACH SLAB
(Looking Upstation)

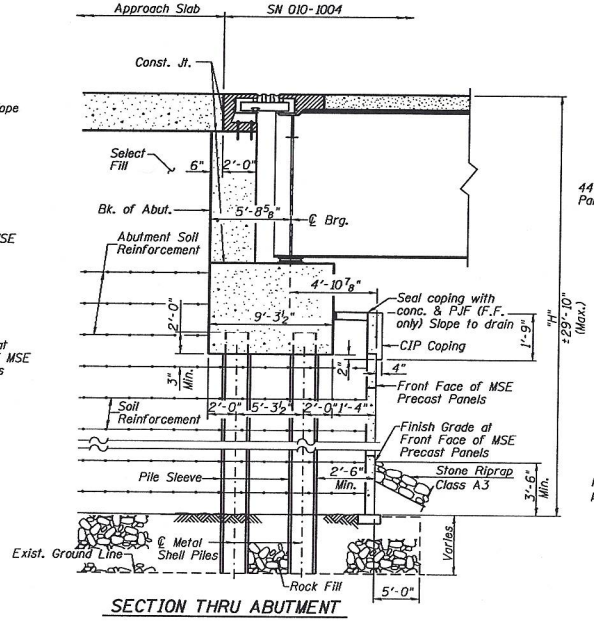

SECTION THRU ABUTMENT

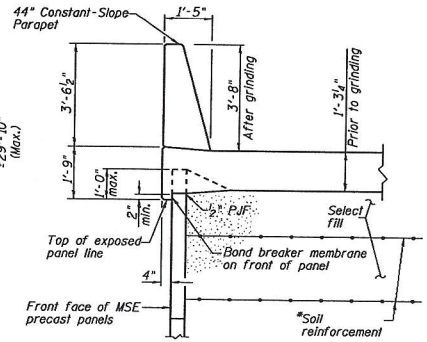

*The M.S.E. wall supplier's internal stability design shall account for the anchorage slab's bearing pressure surcharge of 1.0 ksf and horizontal sliding force of 0.5 kips/ft. of wall.

SECTION THRU CIP BARRIER AND ANCHORAGE SLAB ON PRECAST PANELS

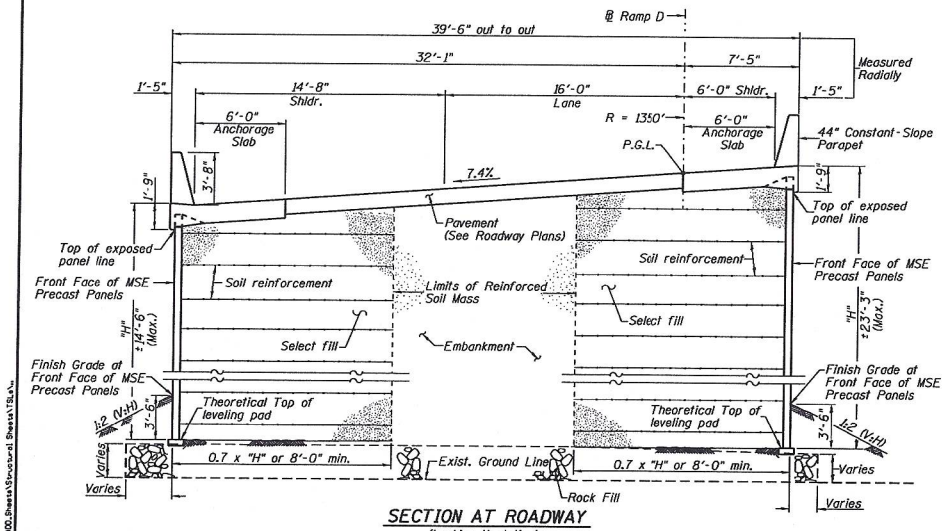

SECTION AT ROADWAY
(Looking Upstation)

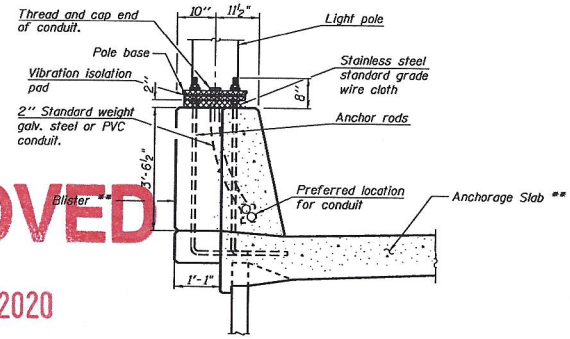

PARAPET MOUNTED LIGHT POLE

**MSE Wall supplier shall account for the anchorage slab's bearing pressure surcharge and horizontal sliding force to resists dead and live loads imposed by the light pole and blister.

APPROVED
OCT 06 2020
AS A BASIS FOR PREPARATION OF DETAILED PLANS

CMT

USER NAME = Denise Herrera	DESIGNED L.M.	REVISED	
...\D570897-TSL-(B)_Ramp D over I74 and I57.dgn	CHECKED R.J.K.	REVISED	
PLOT SCALE =	DRAWN G.L.D. and D.H.	REVISED	
PLOT DATE = May 11, 2020	CHECKED L.M.	REVISED	

STATE OF ILLINOIS
DEPARTMENT OF TRANSPORTATION

I-57 & I-74 INTERCHANGE
STRUCTURE NO. 010-1004 – EAST ABUTMENT MSE WALL
SHEET NO. 9 OF 9 SHEETS

F.A.I. RTE.	SECTION	COUNTY	TOTAL SHEETS	SHEET NO.
74 & 57	(10-34-1) HBK	CHAMPAIGN		
		CONTRACT NO. 70B99		
		ILLINOIS FED. AID PROJECT		