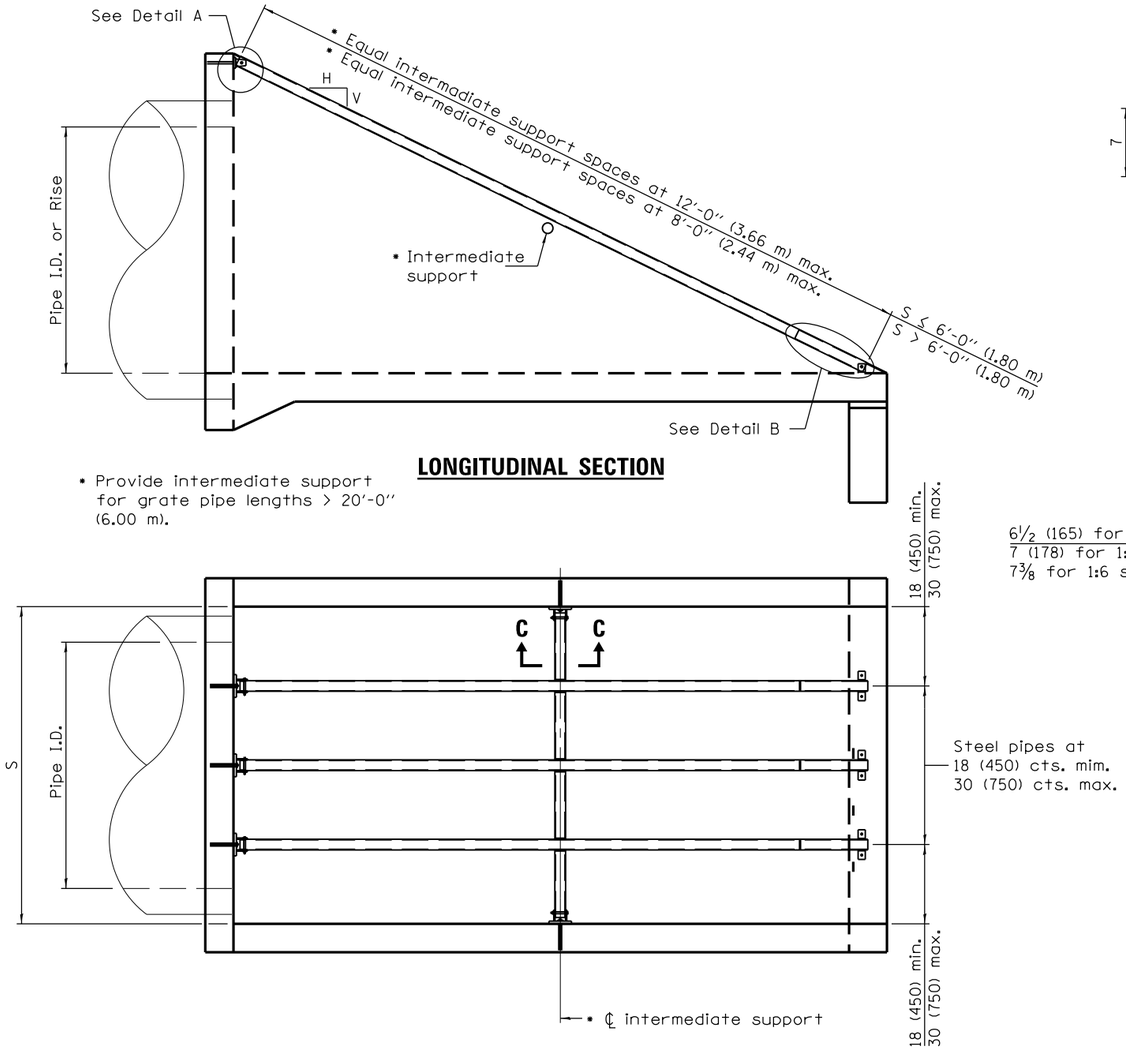

LONGITUDINAL SECTION

PLAN VIEW

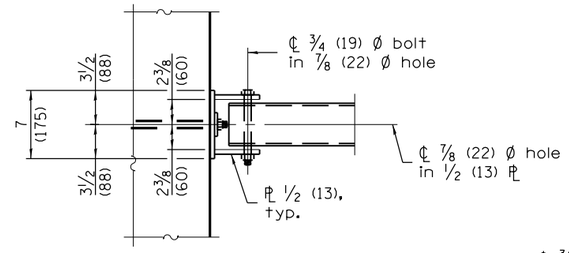

VIEW A–A

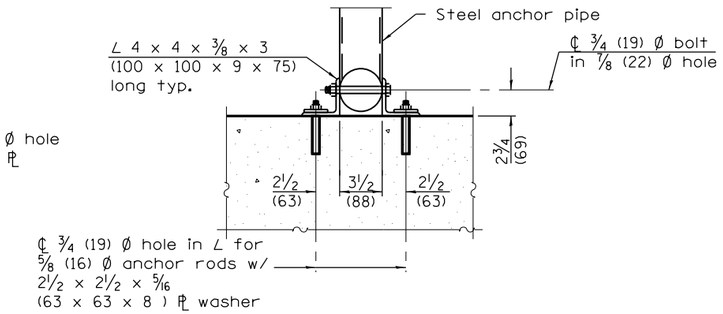

SECTION B–B

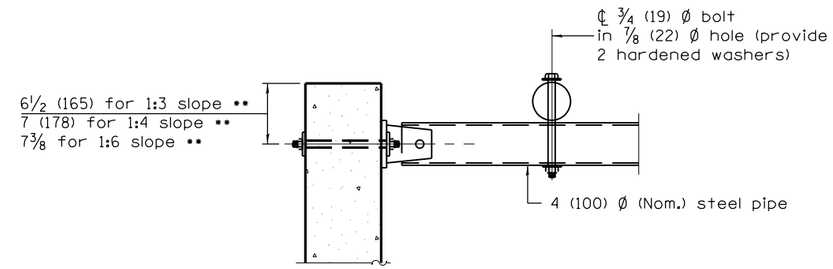

SECTION D–D

•• Measured perpendicular to top of culvert wall. In addition, formed hole shall be located a minimum of 6 (150) measured horizontally from any vertical joints necessary for construction of the culvert end section.

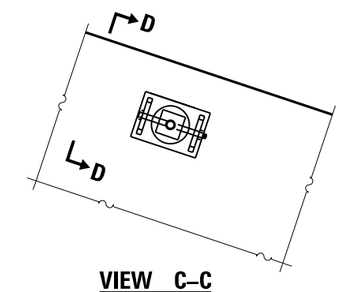

VIEW C–C

(See Detail A for dimensions and details not shown.)

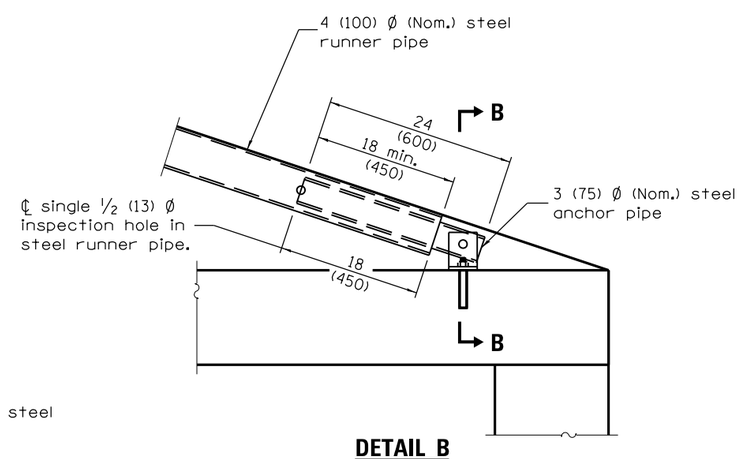

DETAIL B

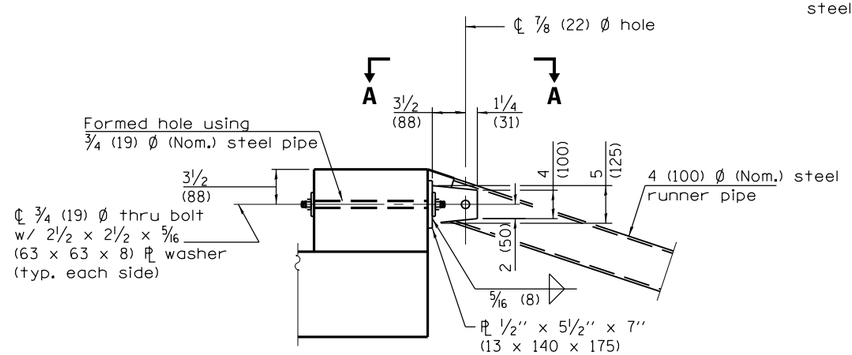

DETAIL A

GENERAL NOTES

This standard shall only be used on concrete end sections not skewed more than ± 15 degrees with roadway.

The minimum distance from the center of a hole to the free edge of a structural shape or plate shall be 1½ (38) unless noted otherwise.

All dimensions are in inches (millimeters) unless otherwise shown.

Illinois Department of Transportation

PASSED January 1, 2014
ENGINEER OF BRIDGES AND STRUCTURES
APPROVED January 1, 2014
ENGINEER OF DESIGN AND ENVIRONMENT

ISSUED 1-1-97

DATE	REVISIONS
1-1-14	Added 27 (675) pipe culvert
	to sched. Modified dimension
	in SECTION D-D.
1-1-13	Completely revised and
	renamed standard.

TRAVERSABLE PIPE GRATE

(Sheet 1 of 2)

STANDARD 542311–05

PIPE–GRATE SCHEDULE FOR PIPE CULVERT END SECTIONS

Pipe I.D.	Slope of End Section								
	1:3			1:4			1:6		
	Main Pipe No. / Length	Int. Support No. / Length	Total Length of Pipe	Main Pipe No. / Length	Int. support No. / Length	Total Length of Pipe	Main Pipe No. / Length	Int. Support No. / Length	Total Length of Pipe
27 (675)	1 @ 9′-8″ 1 @ (2.95 m)	N/A	9′-8″ (2.95 m)	1 @ 12′-11″ 1 @ (3.94 m)	N/A	12′-11″ (3.94 m)	1 @ 19′-7″ 1 @ (5.97 m)	N/A	19′-7″ (5.97 m)
30 (750)	1 @ 11′-4″ 1 @ (3.43 m)	N/A	11′-4″ (3.43 m)	1 @ 14′-10″ 1 @ (4.52 m)	N/A	14′-10″ (4.52 m)	1 @ 21′-10″ 1 @ (6.65 m)	1 @ 3′-6 1 @ 1.07 m)	25′-4″ (7.72 m)
33 (825)	1 @ 12′-1″ 1 @ (3.68 m)	N/A	12′-1″ (3.68 m)	1 @ 15′-10″ 1 @ (4.83 m)	N/A	15′-10″ (4.83 m)	1 @ 23′-5″ 1 @ (7.14 m)	1 @ 3′-7″ 1 @ (1.09 m)	27′-0″ (8.23 m)
36 (900)	1 @ 12′-10″ 1 @ (3.91 m)	N/A	12′-10″ (3.91 m)	1 @ 16′-10″ 1 @ (5.13 m)	N/A	16′-10″ (5.13 m)	1 @ 24′-11″ 1 @ (7.59 m)	2 @ 3′-11″ 2 @ (1.19 m)	32′-9″ (9.97 m)
42 (1050)	2 @ 14′-9″ 2 @ (4.50 m)	N/A	29′-6″ (9.00 m)	2 @ 19′-3″ 2 @ (5.87 m)	N/A	38′-6″ (11.74 m)	2 @ 28′-6″ 2 @ (8.69 m)	2 @ 4′-7″ 2 @ (1.40 m)	66′-2″ (20.18 m)
48 (1200)	2 @ 16′-4″ 2 @ (4.98 m)	N/A	32′-8″ (9.96 m)	2 @ 21′-4″ 2 @ (6.50 m)	1 @ 5′-1″ 1 @ (1.55 m)	47′-9″ (14.55 m)	2 @ 31′-6″ 2 @ (9.60 m)	2 @ 5′-1″ 2 @ (1.55 m)	73′-2″ (22.30 m)
54 (1350)	2 @ 18′-2″ 2 @ (5.54 m)	N/A	36′-4″ (11.08 m)	2 @ 23′-9″ 2 @ (7.24 m)	2 @ 5′-9″ 2 @ (1.75 m)	59′-0″ (16.23 m)	2 @ 35′-1 2 @ (10.69 m)	4 @ 5′-9″ 4 @ (1.75 m)	93′-2″ (28.38 m)
60 (1500)	2 @ 19′-9″ 2 @ (6.02 m)	N/A	39′-6″ (12.04 m)	2 @ 25′-10″ 2 @ (7.87 m)	3 @ 6′-3″ 3 @ (1.91 m)	70′-5″ (21.47 m)	2 @ 38′-1″ 2 @ (11.61 m)	4 @ 6′-3″ 4 @ (1.91 m)	101′-2″ (30.86 m)
66 (1650)	2 @ 21′-7″ 2 @ (6.58 m)	2 @ 6′-11″ 2 @ (2.11 m)	57′-0″ (17.38 m)	2 @ 28′-2″ 2 @ (8.59 m)	3 @ 6′-11″ 3 @ (2.11 m)	77′-1″ (23.51 m)	2 @ 41′-11″ 2 @ (12.78 m)	5 @ 6′-11″ 5 @ (2.11 m)	127′-5″ (36.11 m)
72 (1800)	3 @ 23′-2″ 3 @ (7.06 m)	2 @ 7′-5″ 2 @ (2.26 m)	84′-4″ (25.70 m)	3 @ 30′-3″ 3 @ (9.22 m)	3 @ 7′-5″ 3 @ (2.26 m)	113′-0″ (34.44 m)	3 @ 44′-8″ 3 @ (13.61 m)	5 @ 7′-5″ 5 @ (2.26 m)	171′-1″ (52.13 m)
78 (1950)	3 @ 25′-0″ 3 @ (7.62 m)	3 @ 8′-1″ 3 @ (2.46 m)	99′-3″ (30.24 m)	3 @ 32′-8″ 3 @ (9.96 m)	4 @ 8′-1″ 4 @ (2.46 m)	130′-4″ (39.72 m)	3 @ 48′-3″ 3 @ (14.71 m)	6 @ 8′-1″ 6 @ (2.46 m)	193′-3″ (58.89 m)
84 (2100)	3 @ 26′-7″ 3 @ (8.10 m)	3 @ 8′-7″ 3 @ (2.62 m)	105′-6″ (32.16 m)	3 @ 34′-9″ 3 @ (10.59 m)	4 @ 8′-7″ 4 @ (2.62 m)	138′-7″ (42.25 m)	3 @ 51′-3″ 3 @ (15.62 m)	6 @ 8′-7″ 6 @ (2.62 m)	206′-3″ (62.58 m)

PIPE–GRATE SCHEDULE FOR ELLIPTICAL PIPE CULVERT END SECTIONS

Pipe I.D. (Equiv. Round)	Slope of End Section								
	1:3			1:4			1:6		
	Main Pipe No. / Length	Int. Support No. / Length	Total Length of Pipe	Main Pipe No. / Length	Int. Support No. / Length	Total Length of Pipe	Main Pipe No. / Length	Int. Support No. / Length	Total Length of Pipe
21 (525)	1 @ 8′-2″ 1 @ (2.49 m)	N/A	8′-2″ (2.49 m)	1 @ 11′-2″ 1 @ (3.40 m)	N/A	11′-2″ (3.40 m)	1 @ 17′-5″ 1 @ (5.31 m)	N/A	17′-5″ (5.31 m)
24 (600)	1 @ 8′-2″ 1 @ (2.49 m)	N/A	8′-2″ (2.49 m)	1 @ 11′-2″ 1 @ (3.40 m)	N/A	11′-2″ (3.40 m)	1 @ 17′-5″ 1 @ (5.31 m)	N/A	17′-5″ (5.31 m)
27 (675)	1 @ 8′-11″ 1 @ (2.72 m)	N/A	8′-11″ (2.72 m)	1 @ 12′-2″ 1 @ (3.71 m)	N/A	12′-2″ (3.71 m)	1 @ 18′-11″ 1 @ (5.77 m)	N/A	18′-11″ (5.77 m)
30 (750)	1 @ 9′-5″ 1 @ (2.87 m)	N/A	9′-5″ (2.87 m)	1 @ 12′-11″ 1 @ (3.94 m)	N/A	12′-11″ (3.94 m)	1 @ 19′-11″ 1 @ (6.07 m)	N/A	19′-11″ (6.07 m)
36 (900)	2 @ 11′-0″ 2 @ (3.35 m)	N/A	22′-0″ (6.70 m)	2 @ 14′-11″ 2 @ (4.55 m)	N/A	29′-10″ (9.10 m)	2 @ 22′-11″ 2 @ (6.99 m)	1 @ 4′-7″ 1 @ (1.40 m)	50′-5″ (15.38 m)
42 (1050)	2 @ 12′-4″ 2 @ (3.76 m)	N/A	24′-8″ (7.52 m)	2 @ 16′-8″ 2 @ (5.08 m)	N/A	33′-4″ (10.16 m)	2 @ 25′-6″ 2 @ (7.77 m)	2 @ 5′-5″ 2 @ (1.65 m)	61′-10″ (18.84 m)
48 (1200)	2 @ 13′-8″ 2 @ (4.17 m)	N/A	27′-4″ (8.34 m)	2 @ 18′-5″ 2 @ (5.61 m)	N/A	36′-10″ (11.22 m)	2 @ 28′-0″ 2 @ (8.53 m)	3 @ 6′-1″ 3 @ (1.85 m)	64′-3″ (22.61 m)
54 (1350)	2 @ 15′-0″ 2 @ (4.75 m)	N/A	30′-0″ (9.50 m)	2 @ 20′-1″ 2 @ (6.12 m)	2 @ 6′-9″ 2 @ (2.06 m)	53′-8″ (16.36 m)	2 @ 30′-7″ 2 @ (9.32 m)	3 @ 6′-9″ 3 @ (2.06 m)	81′-5″ (24.82 m)
60 (1500)	3 @ 16′-7″ 3 @ (5.05 m)	N/A	49′-9″ (15.15 m)	3 @ 22′-2″ 3 @ (6.76 m)	2 @ 7′-7″ 2 @ (2.31 m)	81′-8″ (24.90 m)	3 @ 33′-7″ 3 @ (10.24 m)	4 @ 7′-7″ 4 @ (2.31 m)	131′-1″ (39.96 m)
66 (1650)	3 @ 17′-11″ 3 @ (5.46 m)	N/A	53′-9″ (16.38 m)	3 @ 23′-11″ 3 @ (7.29 m)	2 @ 8′-3″ 2 @ (2.51 m)	88′-3″ (26.89 m)	3 @ 36′-2″ 3 @ (11.02 m)	4 @ 8′-3″ 4 @ (2.51 m)	141′-6″ (43.10 m)
72 (1800)	3 @ 19′-6″ 3 @ (5.94 m)	N/A	58′-6″ (17.82 m)	3 @ 25′-11″ 3 @ (7.90 m)	3 @ 8′-11″ 3 @ (2.72 m)	104′-6″ (31.86 m)	3 @ 39′-2″ 3 @ (11.94 m)	4 @ 8′-11″ 4 @ (2.72 m)	153′-2″ (46.70 m)

Illinois Department of Transportation

PASSED January 1, 2014

ENGINEER OF BRIDGES AND STRUCTURES

APPROVED January 1, 2014

ENGINEER OF DESIGN AND ENVIRONMENT

ISSUED 1-1-97

TRAVERSABLE PIPE GRATE

(Sheet 2 of 2)

STANDARD 542311–05