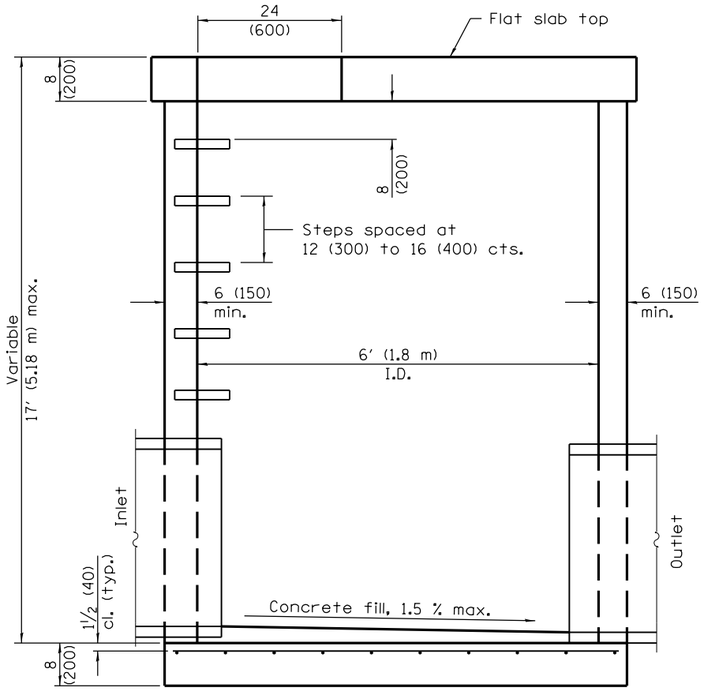

ELEVATION
(with flat slab top only)

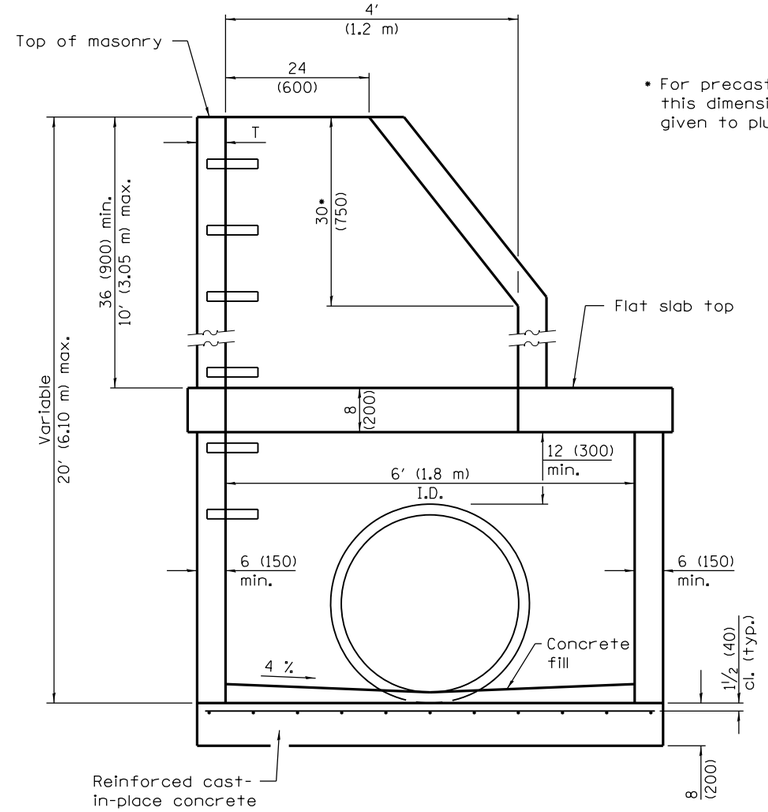

• For precast reinforced concrete sections, this dimension may vary from the dimension given to plus 6 (150).

ELEVATION
(with flat slab top and riser)

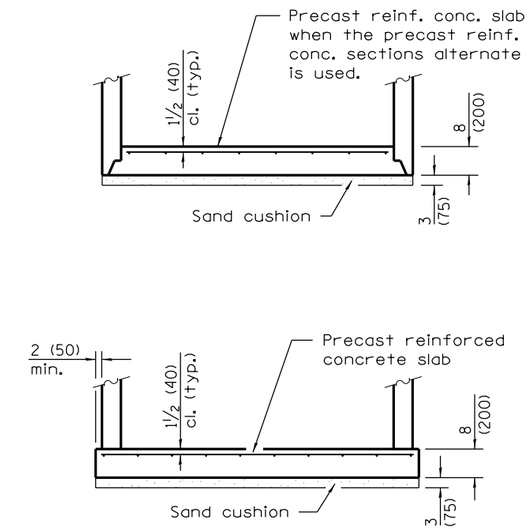

ALTERNATE BOTTOM SLABS

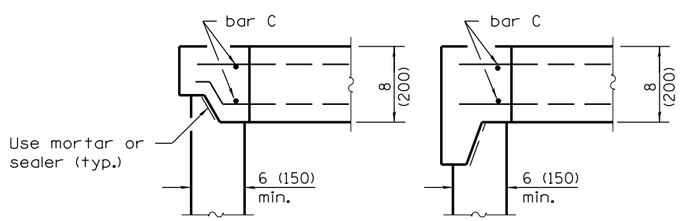

ALTERNATE JOINT CONFIGURATIONS

ALTERNATE MATERIALS FOR WALLS	T (min)
Concrete Masonry Units	5 (125)
Precast Reinforced Concrete Sections	4 (100)
Cast-in-Place Concrete	6 (150)

GENERAL NOTES

Joint configuration and dimensions of flat slab top shall match and fit the riser joint detail.

Bottom slabs shall be reinforced with a minimum of 0.29 sq. in./ft. (610 sq. mm /m) in both directions with a maximum spacing of 13 (330)

Bottom slabs may be connected to the riser as determined by the fabricator; however, only a single row of reinforcement around the perimeter may be utilized.

See Standard 602701 for details of manhole steps.

All dimensions are in inches (millimeters) unless otherwise shown.

Illinois Department of Transportation

PASSED January 1, 2014
Michael Brand
ENGINEER OF POLICY AND PROCEDURES
APPROVED January 1, 2014
ENGINEER OF DESIGN AND ENVIRONMENT

ISSUED 1-1-97

DATE	REVISIONS
1-1-14	Increased maximum heights.
	Revised General Notes.
1-1-12	Added 12 (300) min. from pipe
	to interm. slab, changed
	riser to 36 (900) min height.

MANHOLE TYPE A
6′ (1.8 m) DIAMETER

(Sheet 1 of 2)

STANDARD 602406–06

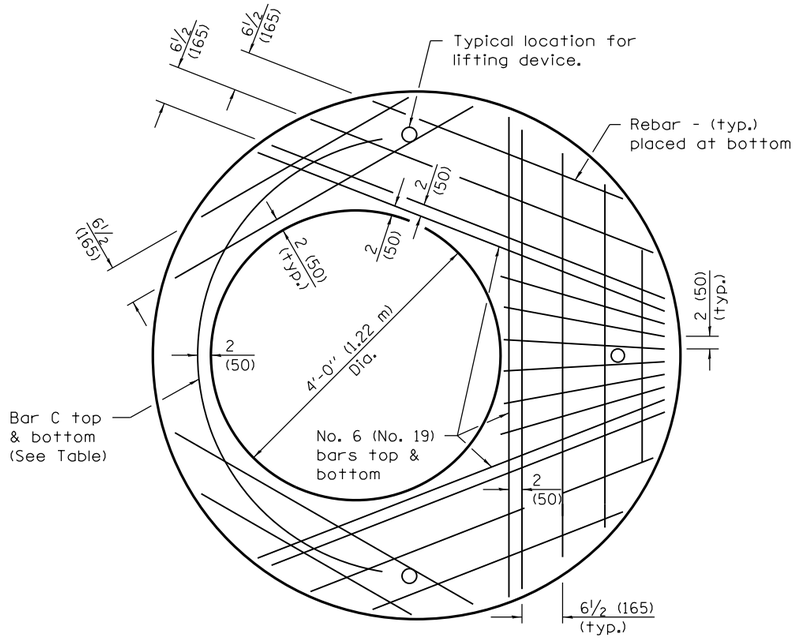

PLAN

Showing Rebar Reinforcement

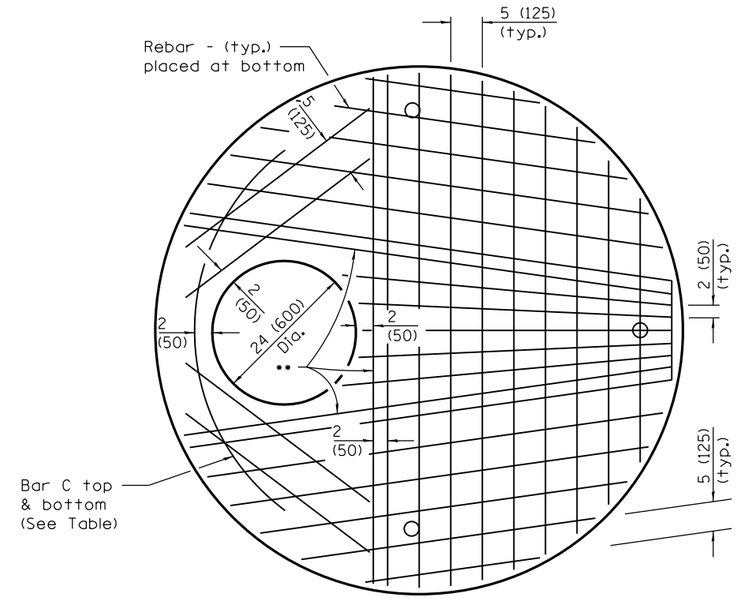

•• No. 6 (No. 19) bars top & bottom

Diameter of opening	Thickness	Reinforcement "As" WWF Each direction	Bar Size	No. 4 (No. 13) Bar C	
				Length	Radius
24 (600)	8 (200)	1.06 sq. in./ft. (2244 sq. mm/m)	No. 6 (No. 19)	6'-0" (1.83 m)	38 (965)
4'-0" (1.2 m)	8 (200)	0.82 sq. in./ft/ (1736 sq. mm/m)	No. 6 (No. 19)	9'-0" (2.74 m)	38 (965)

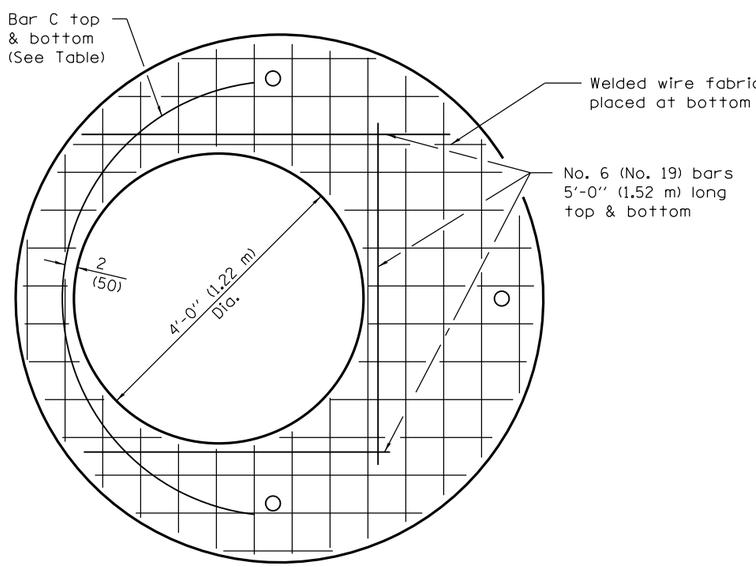

PLAN

Showing Welded Wire Fabric Reinforcement

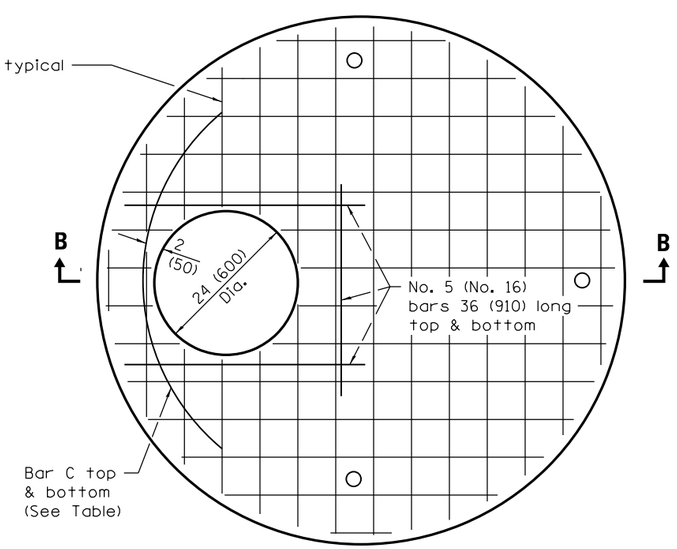

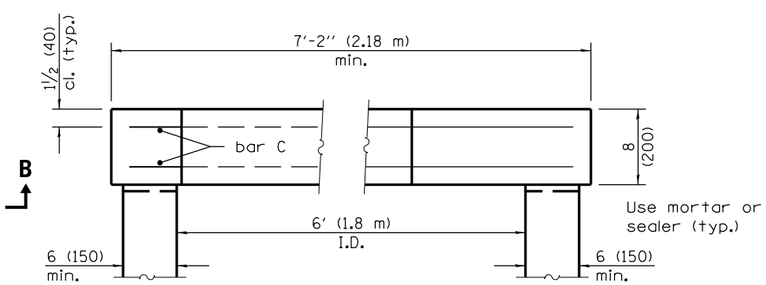

SECTION B–B

Illinois Department of Transportation

PASSED January 1, 2014

Michael Brand
ENGINEER OF POLICY AND PROCEDURES

APPROVED January 1, 2014

ENGINEER OF DESIGN AND ENVIRONMENT

ISSUED 1-1-97

MANHOLE TYPE A
6' (1.8 m) DIAMETER

(Sheet 2 of 2)

STANDARD 602406–06