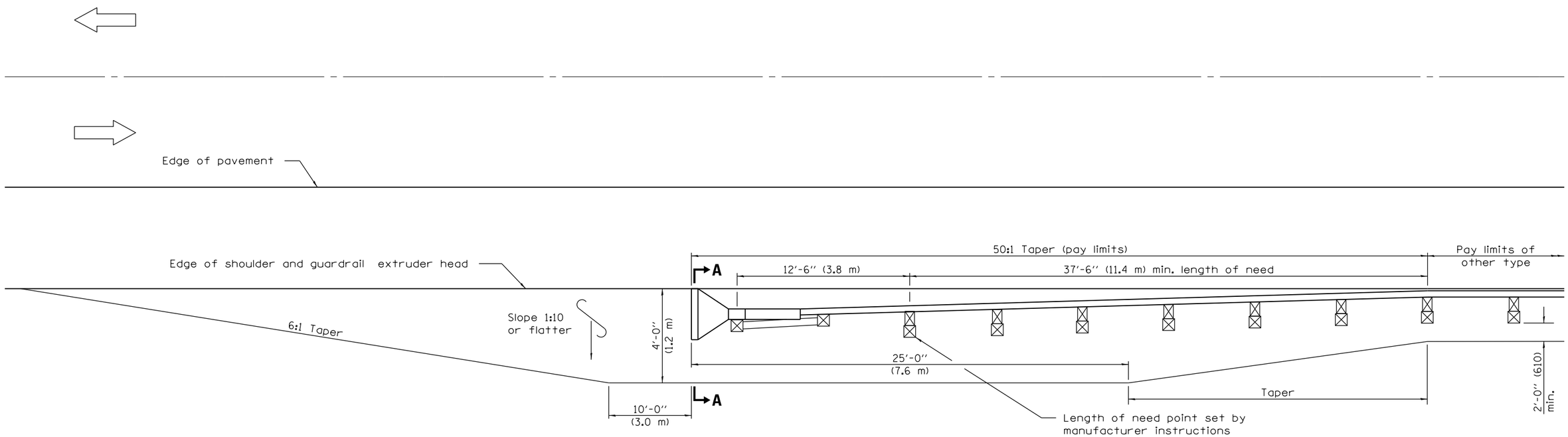

SHOULDER WIDENING TRANSITION FOR TANGENT TERMINAL

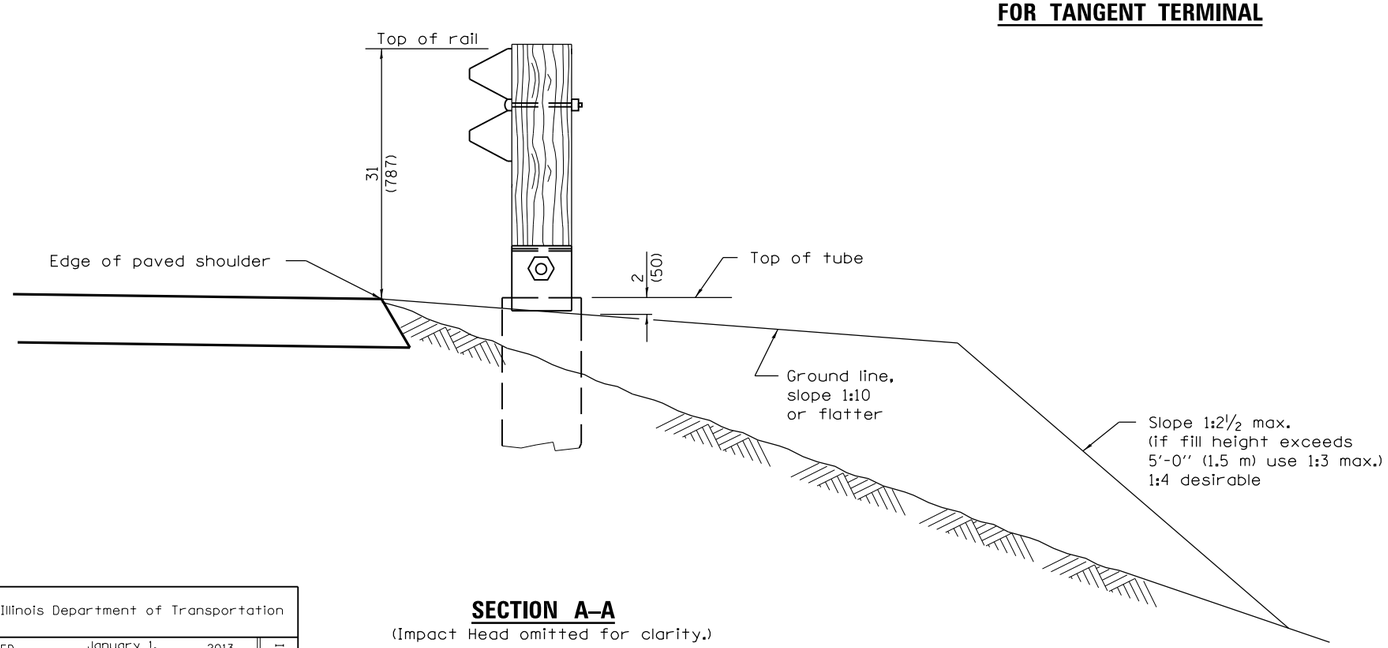

SECTION A–A

(Impact Head omitted for clarity.)

GENERAL NOTES

50:1 Taper required so the guardrail head will not encroach on the shoulder.

All slope ratios are expressed as units of vertical displacement to units of horizontal displacement (V:H).

All dimensions are in inches (millimeters) unless otherwise shown.

Illinois Department of Transportation

PASSED January 1, 2013
Michael Brand
ENGINEER OF POLICY AND PROCEDURES

APPROVED January 1, 2013
ENGINEER OF DESIGN AND ENVIRONMENT

ISSUED 1-1-00

DATE	REVISIONS
1-1-13	Modified dimensioning of
	terminal.
1-1-09	Switched units to
	English (metric).

SHOULDER WIDENING FOR TYPE 1 (SPECIAL) GUARDRAIL TERMINALS

(Sheet 1 of 2)

STANDARD 630301–06

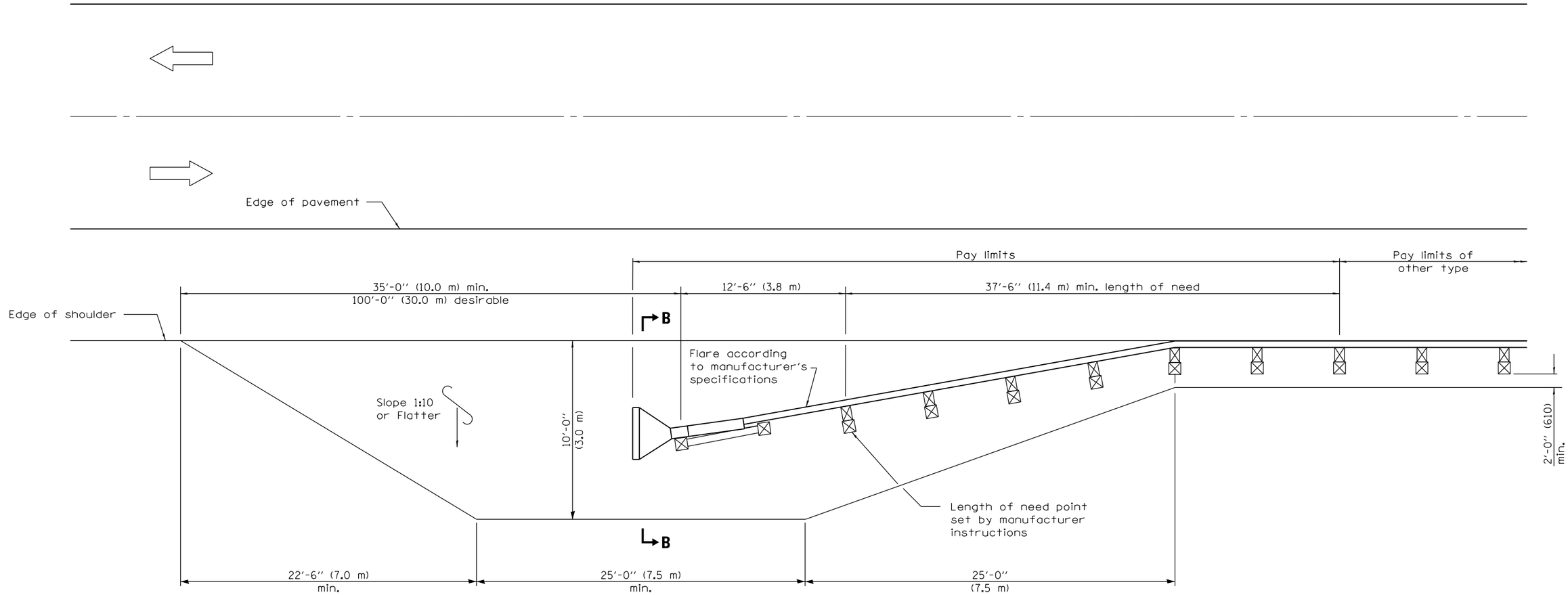

SHOULDER WIDENING TRANSITION FOR FLARED TERMINAL

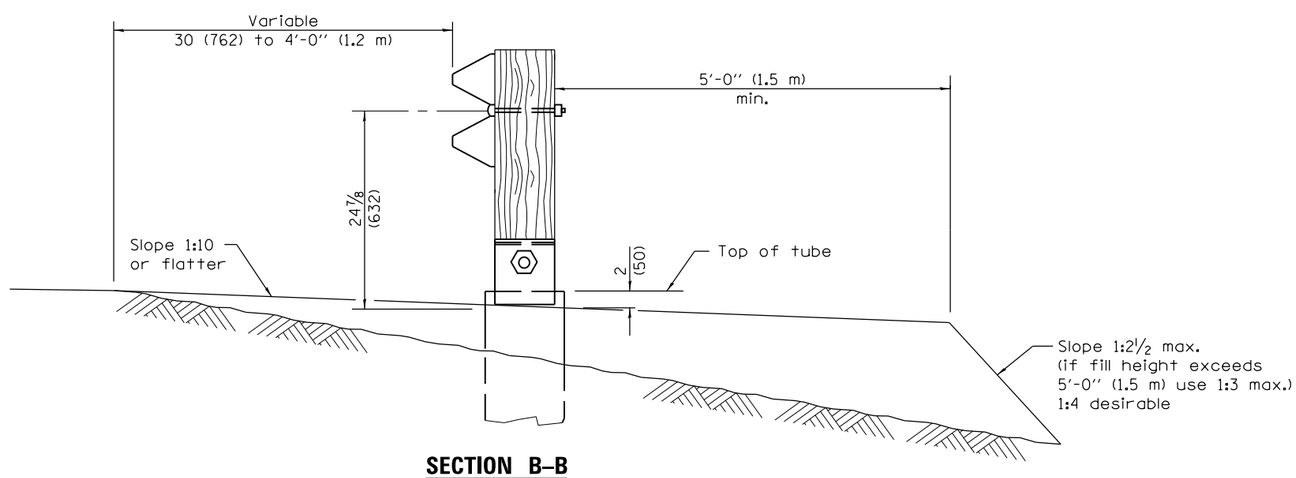

SECTION B–B

(Impact Head omitted for clarity.)

Illinois Department of Transportation

PASSED January 1. 2013

ENGINEER OF POLICY AND PROCEDURES

APPROVED January 1. 2013

ENGINEER OF DESIGN AND ENVIRONMENT

ISSUED 1-1-00

SHOULDER WIDENING FOR TYPE 1 (SPECIAL) GUARDRAIL TERMINALS

(Sheet 2 of 2)

STANDARD 630301–06