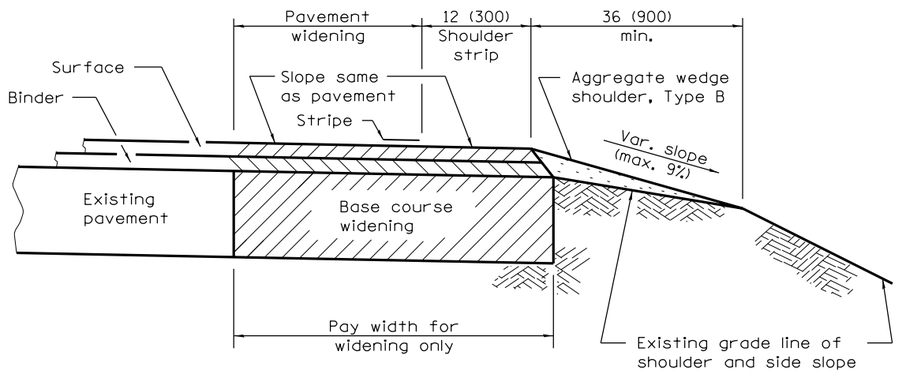

HMA SHOULDER STRIP AND AGGREGATE WEDGE WITH WIDENING

(Cross-section A)

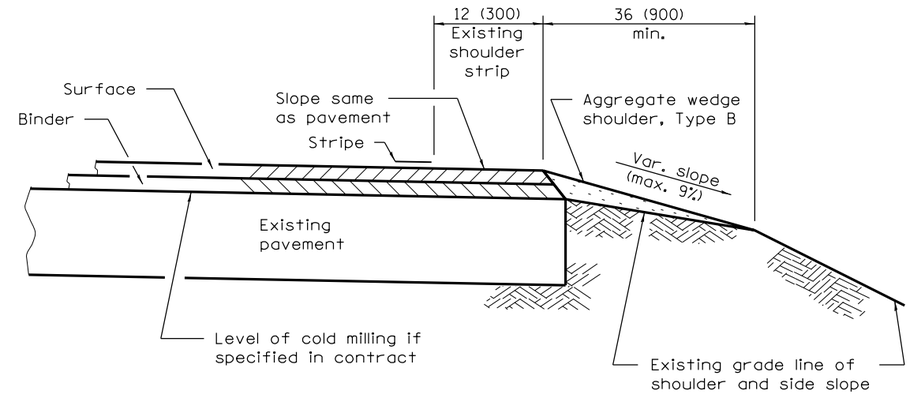

COLD MILLING AND/OR RESURFACING OF EXISTING PAVEMENT WITH SHOULDER STRIPS

(Cross-section C)

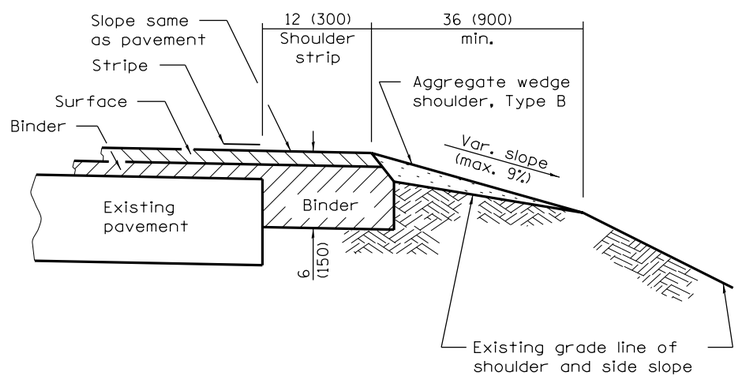

HMA SHOULDER STRIP AND AGGREGATE WEDGE WITH RESURFACING

(Cross-section B)

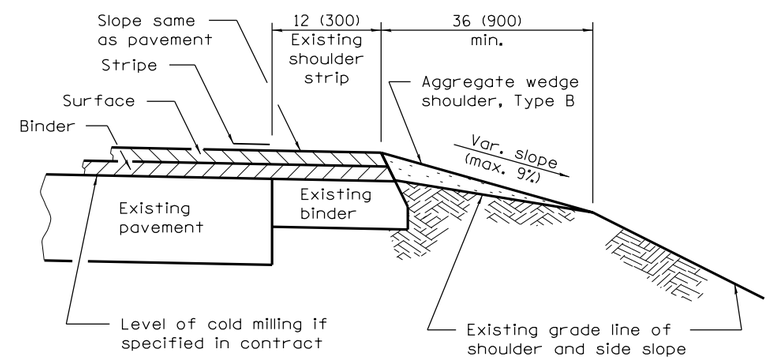

COLD MILLING AND/OR RESURFACING OF EXISTING PAVEMENT WITH SHOULDER STRIPS

(Cross-section D)

All dimensions are in inches (millimeters) unless otherwise shown.

Illinois Department of Transportation

PASSED January 1, 2008
ENGINEER OF POLICY AND PROCEDURES
APPROVED January 1, 2008
ENGINEER OF DESIGN AND ENVIRONMENT

ISSUED 1-1-97

DATE	REVISIONS
1-1-08	Switched units to
	English (metric).
1-1-07	Switched to Hot-Mix
	Asphalt (HMA)
	terminology.

HMA SHLD. STRIPS/SHLDS. WITH RESURFACING OR WIDENING AND RESURFACING PROJECTS

(Sheet 1 of 2)

STANDARD 482011–03

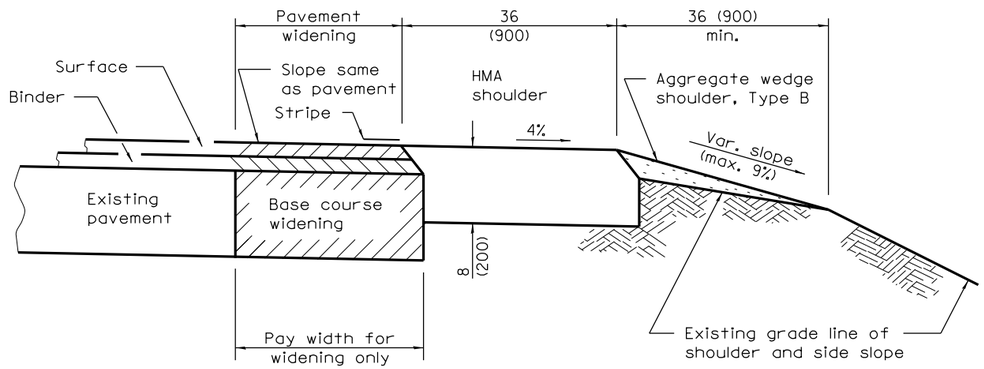

HMA SHOULDER AND AGGREGATE WEDGE WITH WIDENING

(Cross-section E)

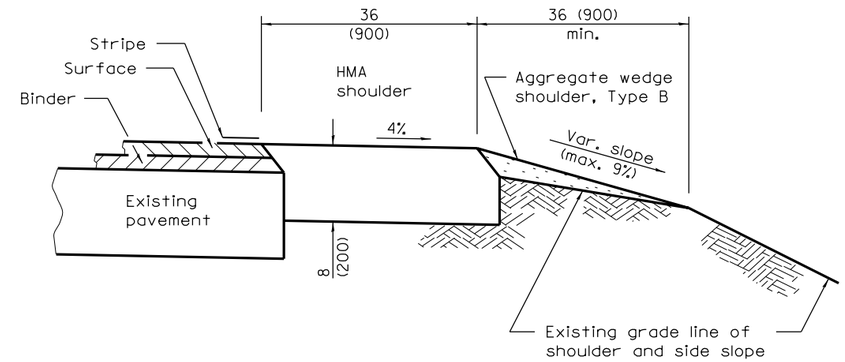

HMA SHOULDER AND AGGREGATE WEDGE WITH RESURFACING

(Cross-section G)

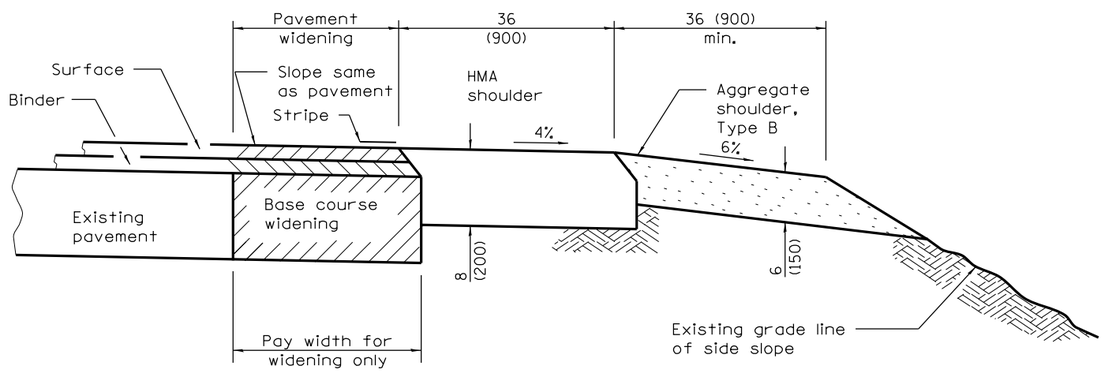

HMA AND AGGREGATE SHOULDERS WITH WIDENING

(Cross-section F)

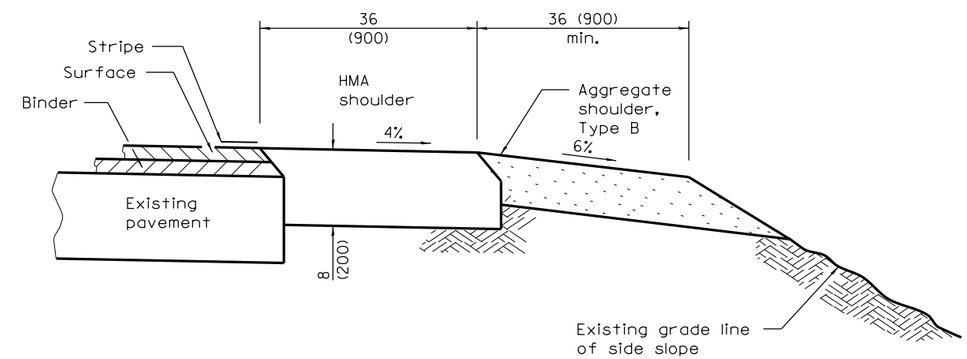

HMA AND AGGREGATE SHOULDERS WITH RESURFACING

(Cross-section H)

Illinois Department of Transportation

PASSED January 1, 2008

ENGINEER OF POLICY AND PROCEDURES

APPROVED January 1, 2008

ENGINEER OF DESIGN AND ENVIRONMENT

ISSUED 1-1-97

HMA SHLD. STRIPS/SHLDS. WITH RESURFACING OR WIDENING AND RESURFACING PROJECTS

(Sheet 2 of 2)

STANDARD 482011–03