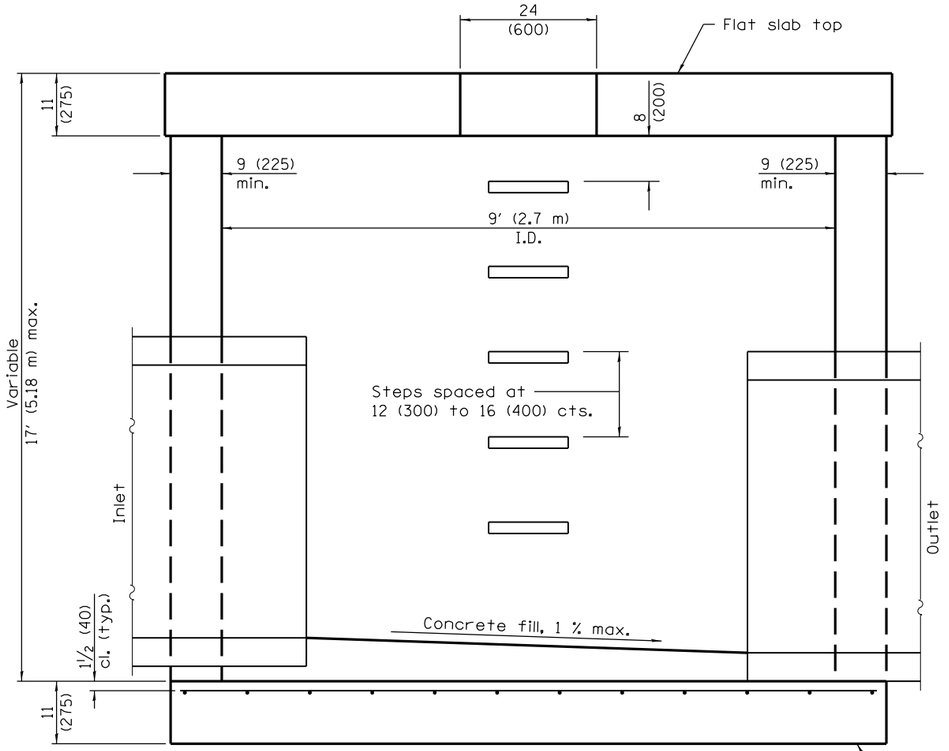

ELEVATION
(With Flat Slab Top Only)

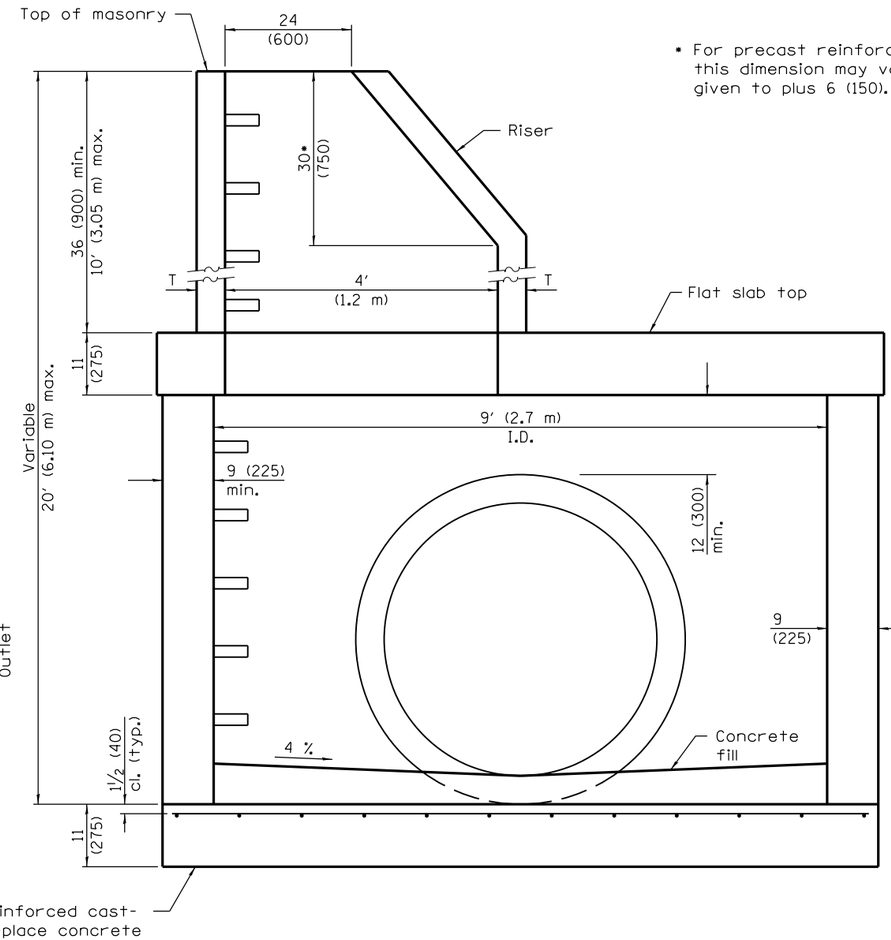

ELEVATION
(With Flat Slab Top and Riser)

- For precast reinforced concrete sections, this dimension may vary from the dimension given to plus 6 (150).

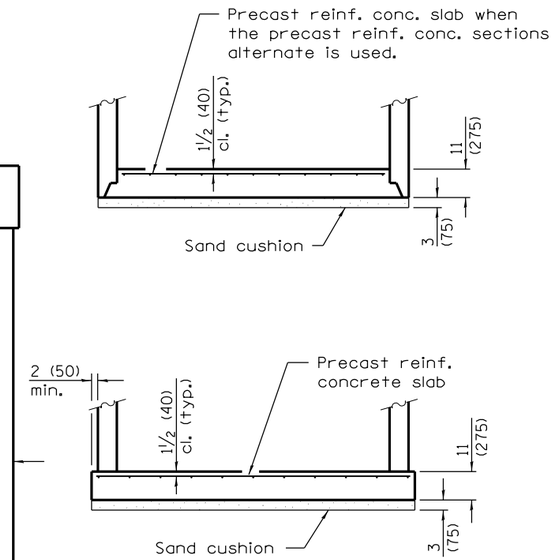

ALTERNATE BOTTOM SLABS

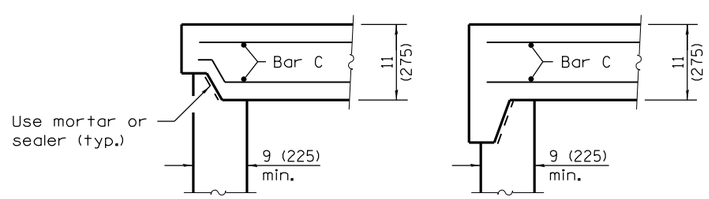

ALTERNATE JOINT CONFIGURATIONS

ALTERNATE MATERIALS FOR RISER WALLS	T (min)
Concrete Masonry Units	5 (125)
Precast Reinforced Concrete Sections	4 (100)
Cast-in-Place Concrete	6 (150)

GENERAL NOTES

Joint configuration and dimensions of flat slab top shall match and fit the riser joint detail.

Bottom slabs shall be reinforced with a minimum of 0.37 sq. in./ft. (780 sq. mm/m) in both directions with a maximum spacing of 10 (250).

Bottom slabs may be connected to the riser as determined by the fabricator; however, only a single row of reinforcement around the perimeter may be utilized.

See Standard 602701 for details of manhole steps.

All dimensions are in inches (millimeters) unless otherwise shown.

Illinois Department of Transportation

PASSED April 1, 2016
Michael Brand
ENGINEER OF POLICY AND PROCEDURES
APPROVED April 1, 2016
ENGINEER OF DESIGN AND ENVIRONMENT

ISSUED 4-1-06

DATE	REVISIONS
4-1-16	Changed terminology to
	'welded wire reinforcement'.
1-1-14	Increased maximum heights.
	Revised General Notes.

MANHOLE TYPE A
9′ (2.7 m) DIAMETER

(Sheet 1 of 2)

STANDARD 602421–05

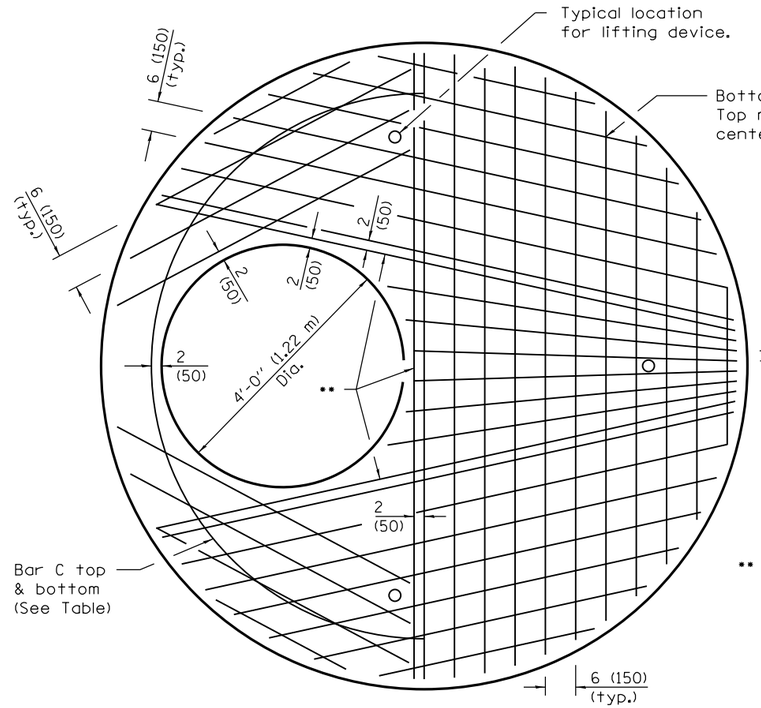

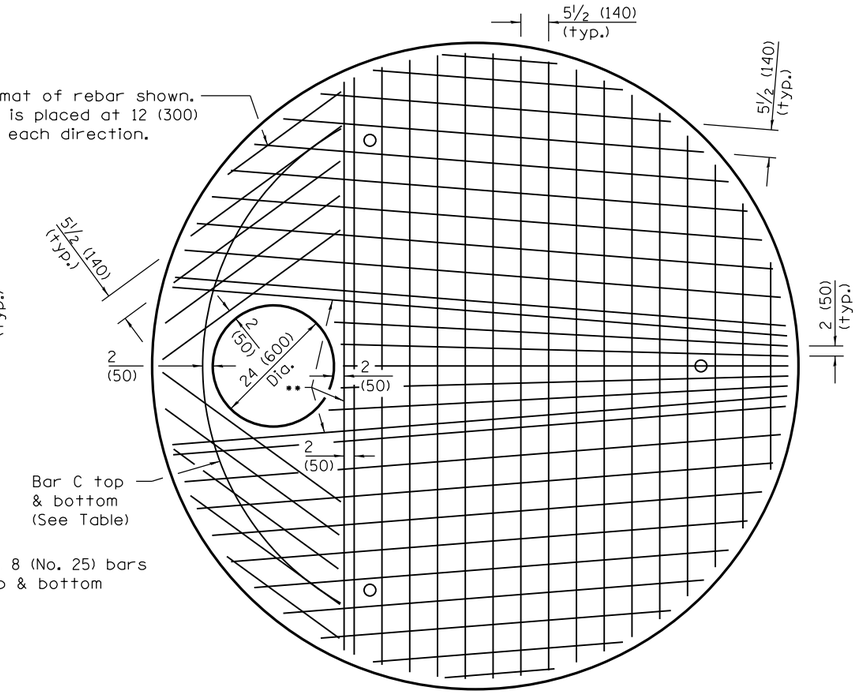

•• No. 8 (No. 25) bars
top & bottom

PLAN
Showing Rebar Reinforcement

Diameter of opening	Reinforcement Bar Size	Reinforcement "As" WWR each direction	No. 4 (No. 13) Bar C	
			Length	Radius
24 (600)	Bottom mat No. 8 (No. 25)	Bottom mat •••• 1.71 sq. in./ft. (3620 sq. mm/m)	9'-6" (2.90 m)	4'-6" (1.372 m)
	Top mat No. 4 (No. 13)	Top mat •••• 0.24 sq. in./ft. (510 sq. m/mm)		
	Bottom mat No. 8 (No. 25)	Bottom mat •••• 1.57 sq. in./ft. (3325 sq. m/mm)	14'-2" (4.30 m)	4'-6" (1.372 m)
	Top mat No. 4 (No. 13)	Top mat •••• 0.24 sq. in./ft. (510 sq. m/mm)		

•••• A maximum of two layers of welded wire reinforcement may be used to satisfy the required "As" for each mat.

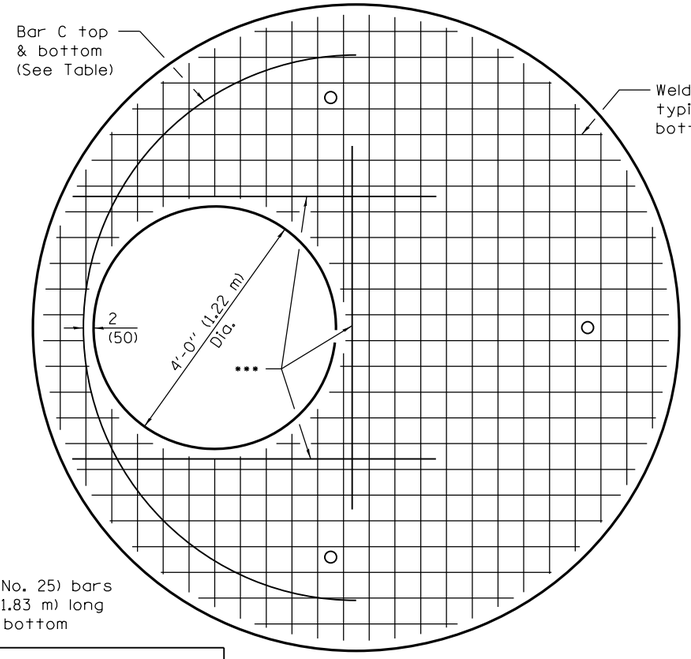

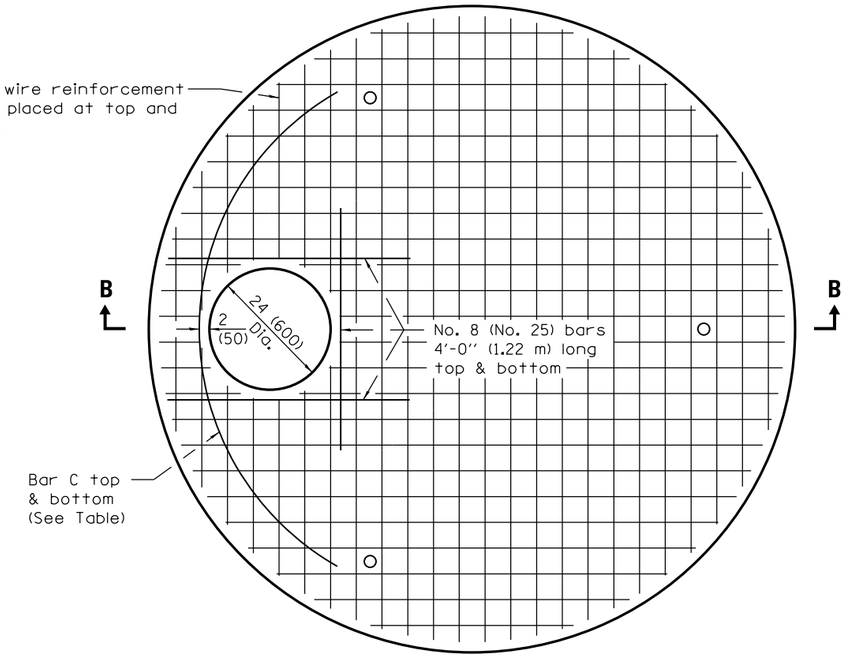

••• No. 8 (No. 25) bars
6'-0" (1.83 m) long
top & bottom

PLAN
Showing Welded Wire Reinforcement

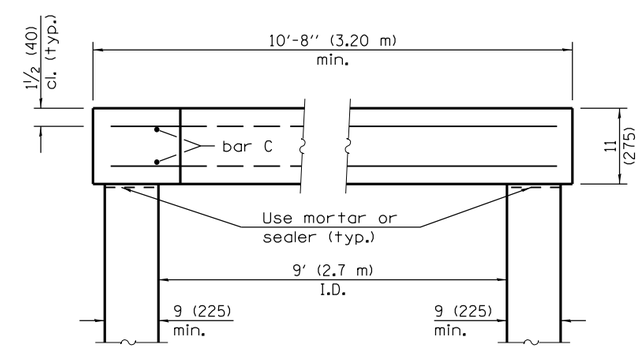

SECTION B–B

Illinois Department of Transportation

PASSED April 1, 2016
Michael Brand
ENGINEER OF POLICY AND PROCEDURES
APPROVED April 1, 2016
ENGINEER OF DESIGN AND ENVIRONMENT

ISSUED 4-1-06

MANHOLE TYPE A
9' (2.7 m) DIAMETER

(Sheet 2 of 2)

STANDARD 602421–05